AUTHENTICATED
U.S. GOVERNMENT
INFORMATION
GPO

# CODE OF FEDERAL REGULATIONS

# Title 40
## Protection of Environment

Part 63 (§ 63.8980 to end of part 63)

Revised as of July 1, 2021

Containing a codification of documents
of general applicability and future effect

As of July 1, 2021

Published by the Office of the Federal Register
National Archives and Records Administration
as a Special Edition of the Federal Register

## U.S. GOVERNMENT OFFICIAL EDITION NOTICE

### Legal Status and Use of Seals and Logos

The seal of the National Archives and Records Administration (NARA) authenticates the Code of Federal Regulations (CFR) as the official codification of Federal regulations established under the Federal Register Act. Under the provisions of 44 U.S.C. 1507, the contents of the CFR, a special edition of the Federal Register, shall be judicially noticed. The CFR is prima facie evidence of the original documents published in the Federal Register (44 U.S.C. 1510).

It is prohibited to use NARA's official seal and the stylized Code of Federal Regulations logo on any republication of this material without the express, written permission of the Archivist of the United States or the Archivist's designee. Any person using NARA's official seals and logos in a manner inconsistent with the provisions of 36 CFR part 1200 is subject to the penalties specified in 18 U.S.C. 506, 701, and 1017.

### Use of ISBN Prefix

This is the Official U.S. Government edition of this publication and is herein identified to certify its authenticity. Use of the 0–16 ISBN prefix is for U.S. Government Publishing Office Official Editions only. The Superintendent of Documents of the U.S. Government Publishing Office requests that any reprinted edition clearly be labeled as a copy of the authentic work with a new ISBN.

GPO U.S. GOVERNMENT PUBLISHING OFFICE

U.S. Superintendent of Documents • Washington, DC 20402–0001

http://bookstore.gpo.gov

Phone: toll-free (866) 512-1800; DC area (202) 512-1800

# Table of Contents


| | Page |
|---|---|
| Explanation | v |
| Title 40: | |
| Chapter I—Environmental Protection Agency (Continued) | 3 |
| Finding Aids: | |
| Table of CFR Titles and Chapters | 1011 |
| Alphabetical List of Agencies Appearing in the CFR | 1031 |
| List of CFR Sections Affected | 1041 |

*Cite this Code:* CFR

*To cite the regulations in this volume use title, part and section number. Thus,* 40 CFR 63.8980 *refers to title 40, part 63, section 8980.*

# Explanation

The Code of Federal Regulations is a codification of the general and permanent rules published in the Federal Register by the Executive departments and agencies of the Federal Government. The Code is divided into 50 titles which represent broad areas subject to Federal regulation. Each title is divided into chapters which usually bear the name of the issuing agency. Each chapter is further subdivided into parts covering specific regulatory areas.

Each volume of the Code is revised at least once each calendar year and issued on a quarterly basis approximately as follows:

Title 1 through Title 16.....as of January 1
Title 17 through Title 27.....as of April 1
Title 28 through Title 41.....as of July 1
Title 42 through Title 50.....as of October 1

The appropriate revision date is printed on the cover of each volume.

LEGAL STATUS

The contents of the Federal Register are required to be judicially noticed (44 U.S.C. 1507). The Code of Federal Regulations is prima facie evidence of the text of the original documents (44 U.S.C. 1510).

HOW TO USE THE CODE OF FEDERAL REGULATIONS

The Code of Federal Regulations is kept up to date by the individual issues of the Federal Register. These two publications must be used together to determine the latest version of any given rule.

To determine whether a Code volume has been amended since its revision date (in this case, July 1, 2021), consult the ''List of CFR Sections Affected (LSA),'' which is issued monthly, and the ''Cumulative List of Parts Affected,'' which appears in the Reader Aids section of the daily Federal Register. These two lists will identify the Federal Register page number of the latest amendment of any given rule.

EFFECTIVE AND EXPIRATION DATES

Each volume of the Code contains amendments published in the Federal Register since the last revision of that volume of the Code. Source citations for the regulations are referred to by volume number and page number of the Federal Register and date of publication. Publication dates and effective dates are usually not the same and care must be exercised by the user in determining the actual effective date. In instances where the effective date is beyond the cutoff date for the Code a note has been inserted to reflect the future effective date. In those instances where a regulation published in the Federal Register states a date certain for expiration, an appropriate note will be inserted following the text.

OMB CONTROL NUMBERS

The Paperwork Reduction Act of 1980 (Pub. L. 96–511) requires Federal agencies to display an OMB control number with their information collection request.

Many agencies have begun publishing numerous OMB control numbers as amendments to existing regulations in the CFR. These OMB numbers are placed as close as possible to the applicable recordkeeping or reporting requirements.

PAST PROVISIONS OF THE CODE

Provisions of the Code that are no longer in force and effect as of the revision date stated on the cover of each volume are not carried. Code users may find the text of provisions in effect on any given date in the past by using the appropriate List of CFR Sections Affected (LSA). For the convenience of the reader, a ''List of CFR Sections Affected'' is published at the end of each CFR volume. For changes to the Code prior to the LSA listings at the end of the volume, consult previous annual editions of the LSA. For changes to the Code prior to 2001, consult the List of CFR Sections Affected compilations, published for 1949-1963, 1964-1972, 1973-1985, and 1986-2000.

''[RESERVED]'' TERMINOLOGY

The term ''[Reserved]'' is used as a place holder within the Code of Federal Regulations. An agency may add regulatory information at a ''[Reserved]'' location at any time. Occasionally ''[Reserved]'' is used editorially to indicate that a portion of the CFR was left vacant and not dropped in error.

INCORPORATION BY REFERENCE

*What is incorporation by reference?* Incorporation by reference was established by statute and allows Federal agencies to meet the requirement to publish regulations in the Federal Register by referring to materials already published elsewhere. For an incorporation to be valid, the Director of the Federal Register must approve it. The legal effect of incorporation by reference is that the material is treated as if it were published in full in the Federal Register (5 U.S.C. 552(a)). This material, like any other properly issued regulation, has the force of law.

*What is a proper incorporation by reference?* The Director of the Federal Register will approve an incorporation by reference only when the requirements of 1 CFR part 51 are met. Some of the elements on which approval is based are:

(a) The incorporation will substantially reduce the volume of material published in the Federal Register.

(b) The matter incorporated is in fact available to the extent necessary to afford fairness and uniformity in the administrative process.

(c) The incorporating document is drafted and submitted for publication in accordance with 1 CFR part 51.

*What if the material incorporated by reference cannot be found?* If you have any problem locating or obtaining a copy of material listed as an approved incorporation by reference, please contact the agency that issued the regulation containing that incorporation. If, after contacting the agency, you find the material is not available, please notify the Director of the Federal Register, National Archives and Records Administration, 8601 Adelphi Road, College Park, MD 20740-6001, or call 202-741-6010.

CFR INDEXES AND TABULAR GUIDES

A subject index to the Code of Federal Regulations is contained in a separate volume, revised annually as of January 1, entitled CFR INDEX AND FINDING AIDS. This volume contains the Parallel Table of Authorities and Rules. A list of CFR titles, chapters, subchapters, and parts and an alphabetical list of agencies publishing in the CFR are also included in this volume.

An index to the text of ''Title 3—The President'' is carried within that volume.

The Federal Register Index is issued monthly in cumulative form. This index is based on a consolidation of the ''Contents'' entries in the daily Federal Register.

A List of CFR Sections Affected (LSA) is published monthly, keyed to the revision dates of the 50 CFR titles.

REPUBLICATION OF MATERIAL

There are no restrictions on the republication of material appearing in the Code of Federal Regulations.

INQUIRIES

For a legal interpretation or explanation of any regulation in this volume, contact the issuing agency. The issuing agency's name appears at the top of odd-numbered pages.

For inquiries concerning CFR reference assistance, call 202–741–6000 or write to the Director, Office of the Federal Register, National Archives and Records Administration, 8601 Adelphi Road, College Park, MD 20740-6001 or e-mail *fedreg.info@nara.gov*.

SALES

The Government Publishing Office (GPO) processes all sales and distribution of the CFR. For payment by credit card, call toll-free, 866-512-1800, or DC area, 202-512-1800, M-F 8 a.m. to 4 p.m. e.s.t. or fax your order to 202-512-2104, 24 hours a day. For payment by check, write to: US Government Publishing Office – New Orders, P.O. Box 979050, St. Louis, MO 63197-9000.

ELECTRONIC SERVICES

The full text of the Code of Federal Regulations, the LSA (List of CFR Sections Affected), The United States Government Manual, the Federal Register, Public Laws, Public Papers of the Presidents of the United States, Compilation of Presidential Documents and the Privacy Act Compilation are available in electronic format via *www.govinfo.gov*. For more information, contact the GPO Customer Contact Center, U.S. Government Publishing Office. Phone 202-512-1800, or 866-512-1800 (toll-free). E-mail, *ContactCenter@gpo.gov*.

The Office of the Federal Register also offers a free service on the National Archives and Records Administration's (NARA) website for public law numbers, Federal Register finding aids, and related information. Connect to NARA's website at *www.archives.gov/federal-register*.

The e-CFR is a regularly updated, unofficial editorial compilation of CFR material and Federal Register amendments, produced by the Office of the Federal Register and the Government Publishing Office. It is available at *www.ecfr.gov*.

OLIVER A. POTTS,
*Director*,
*Office of the Federal Register*
*July 1, 2021*

# THIS TITLE

Title 40—PROTECTION OF ENVIRONMENT is composed of thirty-seven volumes. The parts in these volumes are arranged in the following order: Parts 1–49, parts 50–51, part 52 (52.01–52.1018), part 52 (52.1019–52.2019), part 52 (52.2020–end of part 52), parts 53–59, part 60 (60.1–60.499), part 60 (60.500–end of part 60, sections), part 60 (Appendices), parts 61–62, part 63 (63.1–63.599), part 63 (63.600–63.1199), part 63 (63.1200–63.1439), part 63 (63.1440–63.6175), part 63 (63.6580–63.8830), part 63 (63.8980–end of part 63), parts 64–71, parts 72–79, part 80, part 81, parts 82–86, parts 87–95, parts 96–99, parts 100–135, parts 136–149, parts 150–189, parts 190–259, parts 260–265, parts 266–299, parts 300–399, parts 400–424, parts 425–699, parts 700–722, parts 723–789, parts 790–999, parts 1000–1059, and part 1060 to end. The contents of these volumes represent all current regulations codified under this title of the CFR as of July 1, 2021.

Chapter I—Environmental Protection Agency appears in all thirty-seven volumes. OMB control numbers for title 40 appear in § 9.1 of this chapter.

Chapters IV–IX—Regulations issued by the Environmental Protection Agency and Department of Justice, Council on Environmental Quality, Chemical Safety and Hazard Investigation Board, Environmental Protection Agency and Department of Defense; Uniform National Discharge Standards for Vessels of the Armed Forces, Gulf Coast Ecosystem Restoration Council, and the Federal Permitting Improvement Steering Council appear in volume thirty seven.

For this volume, Robert J. Sheehan, III was Chief Editor. The Code of Federal Regulations publication program is under the direction of John Hyrum Martinez, assisted by Stephen J. Frattini.

# Title 40—Protection of Environment

(This book contains part 63, § 63.8980 to end of part 63)

---

*Part*

CHAPTER I—Environmental Protection Agency (Continued) 63

# CHAPTER I—ENVIRONMENTAL PROTECTION AGENCY (CONTINUED)

EDITORIAL NOTE: Nomenclature changes to chapter I appear at 65 FR 47324, 47325, Aug. 2, 2000.

SUBCHAPTER C—AIR PROGRAMS (CONTINUED)


| *Part* | | *Page* |
|---|---|---|
| 63 | National emission standards for hazardous air pollutants for source categories (Continued) ..... | 5 |

# SUBCHAPTER C—AIR PROGRAMS (CONTINUED)

## PART 63—NATIONAL EMISSION STANDARDS FOR HAZARDOUS AIR POLLUTANTS FOR SOURCE CATEGORIES (CONTINUED)

### Subpart NNNNN—National Emission Standards for Hazardous Air Pollutants: Hydrochloric Acid Production


WHAT THIS SUBPART COVERS

Sec.
63.8980 What is the purpose of this subpart?
63.8985 Am I subject to this subpart?
63.8990 What parts of my plant does this subpart cover?
63.8995 When do I have to comply with this subpart?

EMISSION LIMITATIONS AND WORK PRACTICE STANDARDS

63.9000 What emission limitations and work practice standards must I meet?

GENERAL COMPLIANCE REQUIREMENTS

63.9005 What are my general requirements for complying with this subpart?

TESTING AND INITIAL COMPLIANCE REQUIREMENTS

63.9010 By what date must I conduct performance tests?
63.9015 When must I conduct subsequent performance tests?
63.9020 What performance tests and other procedures must I use?
63.9025 What are my monitoring installation, operation, and maintenance requirements?
63.9030 How do I demonstrate initial compliance with the emission limitations and work practice standards?

CONTINUOUS COMPLIANCE REQUIREMENTS

63.9035 How do I monitor and collect data to demonstrate continuous compliance?
63.9040 How do I demonstrate continuous compliance with the emission limitations and work practice standards?

NOTIFICATIONS, REPORTS, AND RECORDS

63.9045 What notifications must I submit and when?
63.9050 What reports must I submit and when?
63.9055 What records must I keep?
63.9060 In what form and how long must I keep my records?

OTHER REQUIREMENTS AND INFORMATION

63.9065 What parts of the General Provisions apply to me?
63.9070 Who implements and enforces this subpart?
63.9075 What definitions apply to this subpart?

TABLE 1 TO SUBPART NNNNN OF PART 63—EMISSION LIMITS AND WORK PRACTICE STANDARDS
TABLE 2 TO SUBPART NNNNN OF PART 63—OPERATING LIMITS
TABLE 3 TO SUBPART NNNNN OF PART 63—PERFORMANCE TEST REQUIREMENTS FOR HCL PRODUCTION AFFECTED SOURCES
TABLE 4 TO SUBPART NNNNN OF PART 63—INITIAL COMPLIANCE WITH EMISSION LIMITATIONS AND WORK PRACTICE STANDARDS
TABLE 5 TO SUBPART NNNNN OF PART 63—CONTINUOUS COMPLIANCE WITH EMISSION LIMITATIONS AND WORK PRACTICE STANDARDS
TABLE 6 TO SUBPART NNNNN OF PART 63—REQUIREMENTS FOR REPORTS
TABLE 7 TO SUBPART NNNNN OF PART 63—APPLICABILITY OF GENERAL PROVISIONS TO SUBPART NNNNN


### Subpart OOOOO [Reserved]

### Subpart PPPPP—National Emission Standards for Hazardous Air Pollutants for Engine Test Cells/Stands


WHAT THIS SUBPART COVERS

63.9280 What is the purpose of subpart PPPPP?
63.9285 Am I subject to this subpart?
63.9290 What parts of my plant does this subpart cover?
63.9295 When do I have to comply with this subpart?

EMISSION LIMITATIONS

63.9300 What emission limitation must I meet?
63.9301 What are my options for meeting the emission limits?
63.9302 What operating limits must I meet?

GENERAL COMPLIANCE REQUIREMENTS

63.9305 What are my general requirements for complying with this subpart?
63.9306 What are my continuous parameter monitoring system (CPMS) installation, operation, and maintenance requirements?
63.9307 What are my continuous emissions monitoring system installation, operation, and maintenance requirements?

TESTING AND INITIAL COMPLIANCE REQUIREMENTS

63.9310 By what date must I conduct the initial compliance demonstrations?
63.9320 What procedures must I use?
63.9321 What are the general requirements for performance tests?
63.9322 How do I determine the emission capture system efficiency?
63.9323 How do I determine the add-on control device emission destruction or removal efficiency?
63.9324 How do I establish the emission capture system and add-on control device operating limits during the performance test?
63.9330 How do I demonstrate initial compliance with the emission limitation?

CONTINUOUS COMPLIANCE REQUIREMENTS

63.9335 How do I monitor and collect data to demonstrate continuous compliance?
63.9340 How do I demonstrate continuous compliance with the emission limitation?

NOTIFICATIONS, REPORTS, AND RECORDS

63.9345 What notifications must I submit and when?
63.9350 What reports must I submit and when?
63.9355 What records must I keep?
63.9360 In what form and how long must I keep my records?

OTHER REQUIREMENTS AND INFORMATION

63.9365 What parts of the General Provisions apply to me?
63.9370 Who implements and enforces this subpart?
63.9375 What definitions apply to this subpart?

TABLE 1 TO SUBPART PPPPP OF PART 63—EMISSION LIMITATIONS
TABLE 2 TO SUBPART PPPPP OF PART 63—OPERATING LIMITS
TABLE 3 TO SUBPART PPPPP OF PART 63—REQUIREMENTS FOR INITIAL COMPLIANCE DEMONSTRATIONS
TABLE 4 TO SUBPART PPPPP OF PART 63—INITIAL COMPLIANCE WITH EMISSION LIMITATIONS
TABLE 5 TO SUBPART PPPPP OF PART 63—CONTINUOUS COMPLIANCE WITH EMISSION LIMITATIONS
TABLE 6 TO SUBPART PPPPP OF PART 63—REQUIREMENTS FOR REPORTS
TABLE 7 TO SUBPART PPPPP OF PART 63—APPLICABILITY OF GENERAL PROVISIONS TO SUBPART PPPPP

## Subpart QQQQQ—National Emission Standards for Hazardous Air Pollutants for Friction Materials Manufacturing Facilities

WHAT THIS SUBPART COVERS

63.9480 What is the purpose of this subpart?
63.9485 Am I subject to this subpart?
63.9490 What parts of my plant does this subpart cover?
63.9495 When do I have to comply with this subpart?

EMISSION LIMITATIONS

63.9500 What emission limitations must I meet?

GENERAL COMPLIANCE REQUIREMENTS

63.9505 What are my general requirements for complying with this subpart?

INITIAL COMPLIANCE DEMONSTRATION REQUIREMENTS

63.9510 By what date must I conduct my initial compliance demonstration?
63.9515 How do I demonstrate initial compliance with the emission limitation that applies to me?
63.9520 What procedures must I use to demonstrate initial compliance?
63.9525 What are the installation, operation, and maintenance requirements for my weight measurement device?

CONTINUOUS COMPLIANCE REQUIREMENTS

63.9530 How do I demonstrate continuous compliance with the emission limitation that applies to me?

NOTIFICATIONS, REPORTS, AND RECORDS

63.9535 What notifications must I submit and when?
63.9540 What reports must I submit and when?
63.9545 What records must I keep?
63.9550 In what form and how long must I keep my records?

OTHER REQUIREMENTS AND INFORMATION

63.9555 What parts of the General Provisions apply to me?
63.9560 Who implements and enforces this subpart?
63.9565 What definitions apply to this subpart?
63.9570 How do I apply for alternative compliance requirements?
63.9571–63.9579 [Reserved]

TABLE 1 TO SUBPART QQQQQ OF PART 63—APPLICABILITY OF GENERAL PROVISIONS TO SUBPART QQQQQ

## Subpart RRRRR—National Emission Standards for Hazardous Air Pollutants: Taconite Iron Ore Processing

WHAT THIS SUBPART COVERS

63.9580 What is the purpose of this subpart?
63.9581 Am I subject to this subpart?
63.9582 What parts of my plant does this subpart cover?
63.9583 When do I have to comply with this subpart?

EMISSION LIMITATIONS AND WORK PRACTICE STANDARDS

63.9590 What emission limitations must I meet?
63.9591 What work practice standards must I meet?

OPERATION AND MAINTENANCE REQUIREMENTS

63.9600 What are my operation and maintenance requirements?

GENERAL COMPLIANCE REQUIREMENTS

63.9610 What are my general requirements for complying with this subpart?

INITIAL COMPLIANCE REQUIREMENTS

63.9620 On which units and by what date must I conduct performance tests or other initial compliance demonstrations?
63.9621 What test methods and other procedures must I use to demonstrate initial compliance with the emission limits for particulate matter?
63.9622 What test methods and other procedures must I use to establish and demonstrate initial compliance with the operating limits?
63.9623 How do I demonstrate initial compliance with the emission limitations that apply to me?
63.9624 How do I demonstrate initial compliance with the work practice standards that apply to me?
63.9625 How do I demonstrate initial compliance with the operation and maintenance requirements that apply to me?

CONTINUOUS COMPLIANCE REQUIREMENTS

63.9630 When must I conduct subsequent performance tests?
63.9631 What are my monitoring requirements?
63.9632 What are the installation, operation, and maintenance requirements for my monitoring equipment?
63.9633 How do I monitor and collect data to demonstrate continuous compliance?
63.9634 How do I demonstrate continuous compliance with the emission limitations that apply to me?
63.9635 How do I demonstrate continuous compliance with the work practice standards that apply to me?
63.9636 How do I demonstrate continuous compliance with the operation and maintenance requirements that apply to me?
63.9637 What other requirements must I meet to demonstrate continuous compliance?

NOTIFICATIONS, REPORTS, AND RECORDS

63.9640 What notifications must I submit and when?
63.9641 What reports must I submit and when?
63.9642 What records must I keep?
63.9643 In what form and how long must I keep my records?

OTHER REQUIREMENTS AND INFORMATION

63.9650 What parts of the General Provisions apply to me?
63.9651 Who implements and enforces this subpart?
63.9652 What definitions apply to this subpart?

TABLE 1 TO SUBPART RRRRR OF PART 63—EMISSION LIMITS
TABLE 2 TO SUBPART RRRRR OF PART 63—APPLICABILITY OF GENERAL PROVISIONS TO SUBPART RRRRR OF PART 63

## Subpart SSSSS—National Emission Standards for Hazardous Air Pollutants for Refractory Products Manufacturing

WHAT THIS SUBPART COVERS

63.9780 What is the purpose of this subpart?
63.9782 Am I subject to this subpart?
63.9784 What parts of my plant does this subpart cover?
63.9786 When do I have to comply with this subpart?

EMISSION LIMITATIONS AND WORK PRACTICE STANDARDS

63.9788 What emission limits, operating limits, and work practice standards must I meet?
63.9790 What are my options for meeting the emission limits?

GENERAL COMPLIANCE REQUIREMENTS

63.9792 What are my general requirements for complying with this subpart?
63.9794 What do I need to know about operation, maintenance, and monitoring plans?

TESTING AND INITIAL COMPLIANCE REQUIREMENTS

63.9796 By what date must I conduct performance tests?
63.9798 When must I conduct subsequent performance tests?
63.9800 How do I conduct performance tests and establish operating limits?
63.9802 How do I develop an emissions profile?
63.9804 What are my monitoring system installation, operation, and maintenance requirements?
63.9806 How do I demonstrate initial compliance with the emission limits, operating limits, and work practice standards?

CONTINUOUS COMPLIANCE REQUIREMENTS

63.9808 How do I monitor and collect data to demonstrate continuous compliance?
63.9810 How do I demonstrate continuous compliance with the emission limits, operating limits, and work practice standards?

NOTIFICATIONS, REPORTS, AND RECORDS

63.9812 What notifications must I submit and when?
63.9814 What reports must I submit and when?
63.9816 What records must I keep?
63.9818 In what form and how long must I keep my records?

OTHER REQUIREMENTS AND INFORMATION

63.9820 What parts of the General Provisions apply to me?
63.9822 Who implements and enforces this subpart?
63.9824 What definitions apply to this subpart?

TABLE 1 TO SUBPART SSSSS OF PART 63—EMISSION LIMITS
TABLE 2 TO SUBPART SSSSS OF PART 63—OPERATING LIMITS
TABLE 3 TO SUBPART SSSSS OF PART 63—WORK PRACTICE STANDARDS
TABLE 4 TO SUBPART SSSSS OF PART 63—REQUIREMENTS FOR PERFORMANCE TESTS
TABLE 5 TO SUBPART SSSSS OF PART 63—INITIAL COMPLIANCE WITH EMISSION LIMITS
TABLE 6 TO SUBPART SSSSS OF PART 63—INITIAL COMPLIANCE WITH WORK PRACTICE STANDARDS
TABLE 7 TO SUBPART SSSSS OF PART 63—CONTINUOUS COMPLIANCE WITH EMISSION LIMITS
TABLE 8 TO SUBPART SSSSS OF PART 63—CONTINUOUS COMPLIANCE WITH OPERATING LIMITS
TABLE 9 TO SUBPART SSSSS OF PART 63—CONTINUOUS COMPLIANCE WITH WORK PRACTICE STANDARDS
TABLE 10 TO SUBPART SSSSS OF PART 63—REQUIREMENTS FOR REPORTS
TABLE 11 TO SUBPART SSSSS OF PART 63—APPLICABILITY OF GENERAL PROVISIONS TO SUBPART SSSSS

## Subpart TTTTT—National Emissions Standards for Hazardous Air Pollutants for Primary Magnesium Refining

WHAT THIS SUBPART COVERS

63.9880 What is the purpose of this subpart?
63.9881 Am I subject to this subpart?
63.9882 What parts of my plant does this subpart cover?
63.9883 When do I have to comply with this subpart?

EMISSION LIMITATIONS AND WORK PRACTICE STANDARDS

63.9890 What emission limitations must I meet?
63.9891 What work practice standards must I meet for my fugitive dust sources?

OPERATION AND MAINTENANCE REQUIREMENTS

63.9900 What are my operation and maintenance requirements?

GENERAL COMPLIANCE REQUIREMENTS

63.9910 What are my general requirements for complying with this subpart?

INITIAL COMPLIANCE REQUIREMENTS

63.9911 By what date must I conduct performance tests or other initial compliance demonstrations?
63.9912 When must I conduct subsequent performance tests?
63.9913 What test methods and other procedures must I use to demonstrate initial compliance with the emission limits for particulate matter and $PM_{10}$?
63.9914 What test methods and other procedures must I use to demonstrate initial compliance with chlorine and hydrochloric acid emission limits?
63.9915 What test methods and other procedures must I use to demonstrate initial compliance with dioxin/furan emission limits?
63.9916 What test methods and other procedures must I use to establish and demonstrate initial compliance with the operating limits?
63.9917 How do I demonstrate initial compliance with the emission limitations and work practice standards that apply to me?
63.9918 How do I demonstrate initial compliance with the operation and maintenance requirements that apply to me?

CONTINUOUS COMPLIANCE REQUIREMENTS

63.9920 What are my monitoring requirements?

63.9921 What are the installation, operation, and maintenance requirements for my monitors?
63.9922 How do I monitor and collect data to demonstrate continuous compliance?
63.9923 How do I demonstrate continuous compliance with the emission limitations and work practice standards that apply to me?
63.9924 How do I demonstrate continuous compliance with the operation and maintenance requirements that apply to me?
63.9925 What other requirements must I meet to demonstrate continuous compliance?

NOTIFICATIONS, REPORTS, AND RECORDS

63.9930 What notifications must I submit and when?
63.9931 What reports must I submit and when?
63.9932 What records must I keep?
63.9933 In what form and how long must I keep my records?

OTHER REQUIREMENTS AND INFORMATION

63.9940 What parts of the General Provisions apply to me?
63.9941 Who implements and enforces this subpart?
63.9942 What definitions apply to this subpart?
TABLE 1 TO SUBPART TTTTT OF PART 63—EMISSION LIMITS
TABLE 2 TO SUBPART TTTTT OF PART 63—TOXIC EQUIVALENCY FACTORS
TABLE 3 TO SUBPART TTTTT OF PART 63—INITIAL COMPLIANCE WITH EMISSION LIMITS
TABLE 4 TO SUBPART TTTTT OF PART 63—CONTINUOUS COMPLIANCE WITH EMISSION LIMITS
TABLE 5 TO SUBPART TTTTT OF PART 63—APPLICABILITY OF GENERAL PROVISIONS TO SUBPART TTTTT OF PART 63

## Subpart UUUUU—National Emission Standards for Hazardous Air Pollutants: Coal- and Oil-Fired Electric Utility Steam Generating Units

WHAT THIS SUBPART COVERS

63.9980 What is the purpose of this subpart?
63.9981 Am I subject to this subpart?
63.9982 What is the affected source of this subpart?
63.9983 Are any fossil fuel-fired electric generating units not subject to this subpart?
63.9984 When do I have to comply with this subpart?
63.9985 What is a new EGU?

EMISSION LIMITATIONS AND WORK PRACTICE STANDARDS

63.9990 What are the subcategories of EGUs?
63.9991 What emission limitations, work practice standards, and operating limits must I meet?

GENERAL COMPLIANCE REQUIREMENTS

63.10000 What are my general requirements for complying with this subpart?
63.10001 [Reserved]

TESTING AND INITIAL COMPLIANCE REQUIREMENTS

63.10005 What are my initial compliance requirements and by what date must I conduct them?
63.10006 When must I conduct subsequent performance tests or tune-ups?
63.10007 What methods and other procedures must I use for the performance tests?
63.10008 [Reserved]
63.10009 May I use emissions averaging to comply with this subpart?
63.10010 What are my monitoring, installation, operation, and maintenance requirements?
63.10011 How do I demonstrate initial compliance with the emission limitations and work practice standards?

CONTINUOUS COMPLIANCE REQUIREMENTS

63.10020 How do I monitor and collect data to demonstrate continuous compliance?
63.10021 How do I demonstrate continuous compliance with the emission limitations, operating limits, and work practice standards?
63.10022 How do I demonstrate continuous compliance under the emissions averaging provision?
63.10023 How do I establish my PM CPMS operating limit and determine compliance with it?

NOTIFICATIONS, REPORTS, AND RECORDS

63.10030 What notifications must I submit and when?
63.10031 What reports must I submit and when?
63.10032 What records must I keep?
63.10033 In what form and how long must I keep my records?

OTHER REQUIREMENTS AND INFORMATION

63.10040 What parts of the General Provisions apply to me?
63.10041 Who implements and enforces this subpart?
63.10042 What definitions apply to this subpart?
TABLE 1 TO SUBPART UUUUU OF PART 63—EMISSION LIMITS FOR NEW OR RECONSTRUCTED EGUS
TABLE 2 TO SUBPART UUUUU OF PART 63—EMISSION LIMITS FOR EXISTING EGUS
TABLE 3 TO SUBPART UUUUU OF PART 63—WORK PRACTICE STANDARDS

TABLE 4 TO SUBPART UUUUU OF PART 63—OPERATING LIMITS FOR EGUS
TABLE 5 TO SUBPART UUUUU OF PART 63—PERFORMANCE TESTING REQUIREMENTS
TABLE 6 TO SUBPART UUUUU OF PART 63—ESTABLISHING PM CPMS OPERATING LIMITS
TABLE 7 TO SUBPART UUUUU OF PART 63—DEMONSTRATING CONTINUOUS COMPLIANCE
TABLE 8 TO SUBPART UUUUU OF PART 63—REPORTING REQUIREMENTS
TABLE 9 TO SUBPART UUUUU OF PART 63—APPLICABILITY OF GENERAL PROVISIONS TO SUBPART UUUUU
APPENDIX A TO SUBPART UUUUU OF PART 63—HG MONITORING PROVISIONS
APPENDIX B TO SUBPART UUUUU OF PART 63—HCL AND HF MONITORING PROVISIONS
APPENDIX C TO SUBPART UUUUU OF PART 63—PM MONITORING PROVISIONS
APPENDIX D TO SUBPART UUUUU OF PART 63—PM CPMS MONITORING PROVISIONS
APPENDIX E TO SUBPART UUUUU OF PART 63—DATA ELEMENTS

## Subpart VVVVV [Reserved]

## Subpart WWWWW—National Emission Standards for Hospital Ethylene Oxide Sterilizers

APPLICABILITY AND COMPLIANCE DATES

63.10382 Am I subject to this subpart?
63.10384 What are my compliance dates?

STANDARDS

63.10390 What management practice standards must I meet?

INITIAL COMPLIANCE REQUIREMENTS

63.10400 How do I demonstrate initial compliance?
63.10402 By what date must I demonstrate initial compliance?

MONITORING—CONTINUOUS COMPLIANCE REQUIREMENTS

63.10420 How do I demonstrate continuous compliance with the management practice requirements?

NOTIFICATIONS, REPORTS, AND RECORDS

63.10430 What notifications must I submit and by when?
63.10432 What records must I keep?
63.10434 In what form and for how long must I keep my records?

OTHER REQUIREMENTS AND INFORMATION

63.10440 What parts of the General Provisions apply to me?
63.10442 Who implements and enforces this subpart?
63.10446 Do title V permitting requirements apply to area sources subject to this subpart?
63.10448 What definitions apply to this subpart?

TABLE 1 TO SUBPART WWWWW OF PART 63—APPLICABILITY OF GENERAL PROVISIONS TO SUBPART WWWWW

## Subpart XXXXX [Reserved]

## Subpart YYYYY—National Emission Standards for Hazardous Air Pollutants for Area Sources: Electric Arc Furnace Steelmaking Facilities

APPLICABILITY AND COMPLIANCE DATES

63.10680 Am I subject to this subpart?
63.10681 What are my compliance dates?

STANDARDS AND COMPLIANCE REQUIREMENTS

63.10685 What are the requirements for the control of contaminants from scrap?
63.10686 What are the requirements for electric arc furnaces and argon-oxygen decarburization vessels?

OTHER INFORMATION AND REQUIREMENTS

63.10690 What parts of the General Provisions apply to this subpart??
63.10691 Who implements and enforces this subpart?
63.10692 What definitions apply to this subpart?

TABLE 1 TO SUBPART YYYYY OF PART 63—APPLICABILITY OF GENERAL PROVISIONS TO SUBPART YYYYY

## Subpart ZZZZZ—National Emission Standards for Hazardous Air Pollutants for Iron and Steel Foundries Area Sources

APPLICABILITY AND COMPLIANCE DATES

63.10880 Am I subject to this subpart?
63.10881 What are my compliance dates?

POLLUTION PREVENTION MANAGEMENT PRACTICES FOR NEW AND EXISTING AFFECTED SOURCES

63.10885 What are my management practices for metallic scrap and mercury switches?
63.10886 What are my management practices for binder formulations?

REQUIREMENTS FOR NEW AND EXISTING AFFECTED SOURCES CLASSIFIED AS SMALL FOUNDRIES

63.10890 What are my management practices and compliance requirements?

REQUIREMENTS FOR NEW AND EXISTING AFFECTED SOURCES CLASSIFIED AS LARGE FOUNDRIES

63.10895 What are my standards and management practices?
63.10896 What are my operation and maintenance requirements?

63.10897 What are my monitoring requirements?
63.10898 What are my performance test requirements?
63.10899 What are my recordkeeping and reporting requirements?
63.10900 What parts of the General Provisions apply to my large foundry?

OTHER REQUIREMENTS AND INFORMATION

63.10905 Who implements and enforces this subpart?
63.10906 What definitions apply to this subpart?
TABLE 1 TO SUBPART ZZZZZ OF PART 63—PERFORMANCE TEST REQUIREMENTS FOR NEW AND EXISTING AFFECTED SOURCES CLASSIFIED AS LARGE FOUNDRIES
TABLE 2 TO SUBPART ZZZZZ OF PART 63—PROCEDURES FOR ESTABLISHING OPERATING LIMITS FOR NEW AFFECTED SOURCES CLASSIFIED AS LARGE FOUNDRIES
TABLE 3 TO SUBPART ZZZZZ OF PART 63—APPLICABILITY OF GENERAL PROVISIONS TO NEW AND EXISTING AFFECTED SOURCES CLASSIFIED AS LARGE FOUNDRIES
TABLE 4 TO SUBPART ZZZZZ OF PART 63—COMPLIANCE CERTIFICATIONS FOR NEW AND EXISTING AFFECTED SOURCES CLASSIFIED AS LARGE IRON AND STEEL FOUNDRIES

**Subpart AAAAAA [Reserved]**

**Subpart BBBBBB—National Emission Standards for Hazardous Air Pollutants for Source Category: Gasoline Distribution Bulk Terminals, Bulk Plants, and Pipeline Facilities**

WHAT THIS SUBPART COVERS

63.11080 What is the purpose of this subpart?
63.11081 Am I subject to the requirements in this subpart?
63.11082 What parts of my affected source does this subpart cover?
63.11083 When do I have to comply with this subpart?

EMISSION LIMITATIONS AND MANAGEMENT PRACTICES

63.11085 What are my general duties to minimize emissions?
63.11086 What requirements must I meet if my facility is a bulk gasoline plant?
63.11087 What requirements must I meet for gasoline storage tanks if my facility is a bulk gasoline terminal, pipeline breakout station, or pipeline pumping station?
63.11088 What requirements must I meet for gasoline loading racks if my facility is a bulk gasoline terminal, pipeline breakout station, or pipeline pumping station?
63.11089 What requirements must I meet for equipment leak inspections if my facility is a bulk gasoline terminal, pipeline breakout station, or pipeline pumping station?

TESTING AND MONITORING REQUIREMENTS

63.11092 What testing and monitoring requirements must I meet?

NOTIFICATION, RECORDS, AND REPORTS

63.11093 What notifications must I submit and when?
63.11094 What are my recordkeeping requirements?
63.11095 What are my reporting requirements?

OTHER REQUIREMENTS AND INFORMATION

63.11098 What parts of the General Provisions apply to me?
63.11099 Who implements and enforces this subpart?
63.11100 What definitions apply to this subpart?
TABLE 1 TO SUBPART BBBBBB OF PART 63—APPLICABILITY CRITERIA, EMISSION LIMITS, AND MANAGEMENT PRACTICES FOR STORAGE TANKS
TABLE 2 TO SUBPART BBBBBB OF PART 63—APPLICABILITY CRITERIA, EMISSION LIMITS, AND MANAGEMENT PRACTICES FOR LOADING RACKS
TABLE 3 TO SUBPART BBBBBB OF PART 63—APPLICABILITY OF GENERAL PROVISIONS

**Subpart CCCCCC—National Emission Standards for Hazardous Air Pollutants for Source Category: Gasoline Dispensing Facilities**

WHAT THIS SUBPART COVERS

63.11110 What is the purpose of this subpart?
63.11111 Am I subject to the requirements in this subpart?
63.11112 What parts of my affected source does this subpart cover?
63.11113 When do I have to comply with this subpart?

EMISSION LIMITATIONS AND MANAGEMENT PRACTICES

63.11115 What are my general duties to minimize emissions?
63.11116 Requirements for facilities with monthly throughput of less than 10,000 gallons of gasoline.
63.11117 Requirements for facilities with monthly throughput of 10,000 gallons of gasoline or more.
63.11118 Requirements for facilities with monthly throughput of 100,000 gallons of gasoline or more.

TESTING AND MONITORING REQUIREMENTS

63.11120 What testing and monitoring requirements must I meet?

NOTIFICATION, RECORDS, AND REPORTS

63.11124 What notifications must I submit and when?
63.11125 What are my recordkeeping requirements?
63.11126 What are my reporting requirements?

OTHER REQUIREMENTS AND INFORMATION

63.11130 What parts of the General Provisions apply to me?
63.11131 Who implements and enforces this subpart?
63.11132 What definitions apply to this subpart?

TABLE 1 TO SUBPART CCCCCC OF PART 63—APPLICABILITY CRITERIA AND MANAGEMENT PRACTICES FOR GASOLINE DISPENSING FACILITIES WITH MONTHLY THROUGHPUT OF 100,000 GALLONS OF GASOLINE OR MORE

TABLE 2 TO SUBPART CCCCCC OF PART 63—APPLICABILITY CRITERIA AND MANAGEMENT PRACTICES FOR GASOLINE CARGO TANKS UNLOADING AT GASOLINE DISPENSING FACILITIES WITH MONTHLY THROUGHPUT OF 100,000 GALLONS OF GASOLINE OR MORE

TABLE 3 TO SUBPART CCCCCC OF PART 63—APPLICABILITY OF GENERAL PROVISIONS

**Subpart DDDDDD—National Emission Standards for Hazardous Air Pollutants for Polyvinyl Chloride and Copolymers Production Area Sources**

APPLICABILITY AND COMPLIANCE DATES

63.11140 Am I subject to this subpart?
63.11141 What are my compliance dates?

STANDARDS AND COMPLIANCE REQUIREMENTS

63.11142 What are the standards and compliance requirements for new and existing sources?

OTHER REQUIREMENTS AND INFORMATION

63.11143 What General Provisions apply to this subpart?
63.11144 What definitions apply to this subpart?
63.11145 Who implements and enforces this subpart?

TABLE 1 TO SUBPART DDDDDD OF PART 63—EMISSION LIMITS AND STANDARDS FOR EXISTING AFFECTED SOURCES

TABLE 2 TO SUBPART DDDDDD OF PART 63—EMISSION LIMITS AND STANDARDS FOR NEW AFFECTED SOURCES

**Subpart EEEEEE—National Emission Standards for Hazardous Air Pollutants for Primary Copper Smelting Area Sources**

APPLICABILITY AND COMPLIANCE DATES

63.11146 What are the applicability provisions and compliance dates?

STANDARDS AND COMPLIANCE REQUIREMENTS

63.11147 What are the standards and compliance requirements for existing sources not using batch copper converters?
63.11148 What are the standards and compliance requirements for existing sources using batch copper converters?
63.11149 What are the standards and compliance requirements for new sources?

OTHER REQUIREMENTS AND INFORMATION

63.11150 What General Provisions apply to this subpart?
63.11151 What definitions apply to this subpart?
63.11152 Who implements and enforces this subpart?

TABLE 1 TO SUBPART EEEEEE OF PART 63—APPLICABILITY OF GENERAL PROVISIONS TO SUBPART EEEEEE

**Subpart FFFFFF—National Emission Standards for Hazardous Air Pollutants for Secondary Copper Smelting Area Sources**

APPLICABILITY AND COMPLIANCE DATES

63.11153 Am I subject to this subpart?
63.11154 What are my compliance dates?

STANDARDS AND COMPLIANCE REQUIREMENTS

63.11155 What are the standards and compliance requirements for new sources?
63.11156 [Reserved]

OTHER REQUIREMENTS AND INFORMATION

63.11157 What General Provisions apply to this subpart?
63.11158 What definitions apply to this subpart?
63.11159 Who implements and enforces this subpart?

TABLE 1 TO SUBPART FFFFFF OF PART 63—APPLICABILITY OF GENERAL PROVISIONS TO SUBPART FFFFFF

**Subpart GGGGGG—National Emission Standards for Hazardous Air Pollutants for Primary Nonferrous Metals Area Sources—Zinc, Cadmium, and Beryllium**

APPLICABILITY AND COMPLIANCE DATES

63.11160 Am I subject to this subpart?

63.11161 What are my compliance dates?

PRIMARY ZINC PRODUCTION FACILITIES

63.11162 What are the standards and compliance requirements for existing sources?
63.11163 What are the standards and compliance requirements for new sources?
63.11164 What General Provisions apply to primary zinc production facilities?

PRIMARY BERYLLIUM PRODUCTION FACILITIES

63.11165 What are the standards and compliance requirements for new and existing sources?
63.11166 What General Provisions apply to primary beryllium production facilities?

OTHER REQUIREMENTS AND INFORMATION

63.11167 What definitions apply to this subpart?
63.11168 Who implements and enforces this subpart?

TABLE 1 TO SUBPART GGGGGG OF PART 63—APPLICABILITY OF GENERAL PROVISIONS TO PRIMARY ZINC PRODUCTION AREA SOURCES

**Subpart HHHHHH—National Emission Standards for Hazardous Air Pollutants: Paint Stripping and Miscellaneous Surface Coating Operations at Area Sources**

WHAT THIS SUBPART COVERS

63.11169 What is the purpose of this subpart?
63.11170 Am I subject to this subpart?
63.11171 How do I know if my source is considered a new source or an existing source?

GENERAL COMPLIANCE REQUIREMENTS

63.11172 When do I have to comply with this subpart?
63.11173 What are my general requirements for complying with this subpart?
63.11174 What parts of the General Provisions apply to me?

NOTIFICATIONS, REPORTS, AND RECORDS

63.11175 What notifications must I submit?
63.11176 What reports must I submit?
63.11177 What records must I keep?
63.11178 In what form and for how long must I keep my records?

OTHER REQUIREMENTS AND INFORMATION

63.11179 Who implements and enforces this subpart?
63.11180 What definitions do I need to know?

TABLE 1 TO SUBPART HHHHHH OF PART 63—APPLICABILITY OF GENERAL PROVISIONS TO SUBPART HHHHHH OF PART 63

**Subpart IIIIII [Reserved]**

**Subpart JJJJJJ—National Emission Standards for Hazardous Air Pollutants for Industrial, Commercial, and Institutional Boilers Area Sources**

WHAT THIS SUBPART COVERS

63.11193 Am I subject to this subpart?
63.11194 What is the affected source of this subpart?
63.11195 Are any boilers not subject to this subpart?
63.11196 What are my compliance dates?

EMISSION LIMITS, WORK PRACTICE STANDARDS, EMISSION REDUCTION MEASURES, AND MANAGEMENT PRACTICES

63.11200 What are the subcategories of boilers?
63.11201 What standards must I meet?

GENERAL COMPLIANCE REQUIREMENTS

63.11205 What are my general requirements for complying with this subpart?

INITIAL COMPLIANCE REQUIREMENTS

63.11210 What are my initial compliance requirements and by what date must I conduct them?
63.11211 How do I demonstrate initial compliance with the emission limits?
63.11212 What stack tests and procedures must I use for the performance tests?
63.11213 What fuel analyses and procedures must I use for the performance tests?
63.11214 How do I demonstrate initial compliance with the work practice standard, emission reduction measures, and management practice?

CONTINUOUS COMPLIANCE REQUIREMENTS

63.11220 When must I conduct subsequent performance tests or fuel analyses?
63.11221 Is there a minimum amount of monitoring data I must obtain?
63.11222 How do I demonstrate continuous compliance with the emission limits?
63.11223 How do I demonstrate continuous compliance with the work practice and management practice standards?
63.11224 What are my monitoring, installation, operation, and maintenance requirements?
63.11225 What are my notification, reporting, and recordkeeping requirements?
63.11226 [Reserved]

OTHER REQUIREMENTS AND INFORMATION

63.11235 What parts of the General Provisions apply to me?
63.11236 Who implements and enforces this subpart?
63.11237 What definitions apply to this subpart?

TABLE 1 TO SUBPART JJJJJJ OF PART 63—EMISSION LIMITS
TABLE 2 TO SUBPART JJJJJJ OF PART 63—WORK PRACTICE STANDARDS, EMISSION REDUCTION MEASURES, AND MANAGEMENT PRACTICES
TABLE 3 TO SUBPART JJJJJJ OF PART 63—OPERATING LIMITS FOR BOILERS WITH EMISSION LIMITS
TABLE 4 TO SUBPART JJJJJJ OF PART 63—PERFORMANCE (STACK) TESTING REQUIREMENTS
TABLE 5 TO SUBPART JJJJJJ OF PART 63—FUEL ANALYSIS REQUIREMENTS
TABLE 6 TO SUBPART JJJJJJ OF PART 63—ESTABLISHING OPERATING LIMIT
TABLE 7 TO SUBPART JJJJJJ OF PART 63—DEMONSTRATING CONTINUOUS COMPLIANCE
TABLE 8 TO SUBPART JJJJJJ OF PART 63—APPLICABILITY OF GENERAL PROVISIONS TO SUBPART JJJJJJ

## Subpart KKKKKK [Reserved]

## Subpart LLLLLL—National Emission Standards for Hazardous Air Pollutants for Acrylic and Modacrylic Fibers Production Area Sources

APPLICABILITY AND COMPLIANCE DATES

63.11393 Am I subject to this subpart?
63.11394 What are my compliance dates?

STANDARDS AND COMPLIANCE REQUIREMENTS

63.11395 What are the standards and compliance requirements for existing sources?
63.11396 What are the standards and compliance requirements for new sources?

OTHER REQUIREMENTS AND INFORMATION

63.11397 What General Provisions apply to this subpart?
63.11398 What definitions apply to this subpart?
63.11399 Who implements and enforces this subpart?

TABLE 1 TO SUBPART LLLLLL OF PART 63—APPLICABILITY OF GENERAL PROVISIONS TO SUBPART LLLLLL

## Subpart MMMMMM—National Emission Standards for Hazardous Air Pollutants for Carbon Black Production Area Sources

APPLICABILITY AND COMPLIANCE DATES

63.11400 Am I subject to this subpart?
63.11401 What are my compliance dates?

STANDARDS AND COMPLIANCE REQUIREMENTS

63.11402 What are the standards and compliance requirements for new and existing sources?
63.11403 [Reserved]

OTHER REQUIREMENTS AND INFORMATION

63.11404 What General Provisions apply to this subpart?
63.11405 What definitions apply to this subpart?
63.11406 Who implements and enforces this subpart?

## Subpart NNNNNN—National Emission Standards for Hazardous Air Pollutants for Chemical Manufacturing Area Sources: Chromium Compounds

APPLICABILITY AND COMPLIANCE DATES

63.11407 Am I subject to this subpart?
63.11408 What are my compliance dates?

STANDARDS AND COMPLIANCE REQUIREMENTS

63.11409 What are the standards?
63.11410 What are the compliance requirements?

OTHER REQUIREMENTS AND INFORMATION

63.11411 What General Provisions apply to this subpart?
63.11412 What definitions apply to this subpart?
63.11413 Who implements and enforces this subpart?

TABLE 1 TO SUBPART NNNNNN OF PART 63—HAP EMISSIONS UNITS
TABLE 2 TO SUBPART NNNNNN OF PART 63—APPLICABILITY OF GENERAL PROVISIONS TO SUBPART NNNNNN

## Subpart OOOOOO—National Emission Standards for Hazardous Air Pollutants for Flexible Polyurethane Foam Production and Fabrication Area Sources

APPLICABILITY AND COMPLIANCE DATES

63.11414 Am I subject to this subpart?
63.11415 What are my compliance dates?

STANDARDS AND COMPLIANCE REQUIREMENTS

63.11416 What are the standards for new and existing sources?
63.11417 What are the compliance requirements for new and existing sources?

OTHER REQUIREMENTS AND INFORMATION

63.11418 What General Provisions apply to this subpart?
63.11419 What definitions apply to this subpart?
63.11420 Who implements and enforces this subpart?

TABLE 1 TO SUBPART OOOOOO OF PART 63—APPLICABILITY OF GENERAL PROVISIONS TO SUBPART OOOOOO

## Subpart PPPPPP—National Emission Standards for Hazardous Air Pollutants for Lead Acid Battery Manufacturing Area Sources

APPLICABILITY AND COMPLIANCE DATES

63.11421 Am I subject to this subpart?
63.11422 What are my compliance dates?

STANDARDS AND COMPLIANCE REQUIREMENTS

63.11423 What are the standards and compliance requirements for new and existing sources?
63.11424 [Reserved]

OTHER REQUIREMENTS AND INFORMATION

63.11425 What General Provisions apply to this subpart?
63.11426 What definitions apply to this subpart?
63.11427 Who implements and enforces this subpart?

TABLE 1 TO SUBPART PPPPPPP OF PART 63—APPLICABILITY OF GENERAL PROVISIONS TO SUBPART PPPPPP

## Subpart QQQQQQ—National Emission Standards for Hazardous Air Pollutants for Wood Preserving Area Sources

APPLICABILITY AND COMPLIANCE DATES

63.11428 Am I subject to this subpart?
63.11429 What are my compliance dates?

STANDARDS

63.11430 What are the standards?
63.11431 [Reserved]

OTHER REQUIREMENTS AND INFORMATION

63.11432 What General Provisions apply to this subpart?
63.11433 What definitions apply to this subpart?
63.11434 Who implements and enforces this subpart?

TABLE 1 TO SUBPART QQQQQQ OF PART 63—APPLICABILITY OF GENERAL PROVISIONS OF SUBPART QQQQQQ

## Subpart RRRRRR—National Emission Standards for Hazardous Air Pollutants for Clay Ceramics Manufacturing Area Sources

APPLICABILITY AND COMPLIANCE DATES

63.11435 Am I subject to this subpart?
63.11436 What parts of my plant does this subpart cover?
63.11437 What are my compliance dates?

STANDARDS, COMPLIANCE, AND MONITORING REQUIREMENTS

63.11438 What are the standards for new and existing sources?
63.11439 What are the initial compliance demonstration requirements for new and existing sources?
63.11440 What are the monitoring requirements for new and existing sources?
63.11441 What are the notification requirements?
63.11442 What are the recordkeeping requirements?

OTHER REQUIREMENTS AND INFORMATION

63.11443 What General Provisions apply to this subpart?
63.11444 What definitions apply to this subpart?
63.11445 Who implements and enforces this subpart?
63.11446–63.11447 [Reserved]

TABLE 1 TO SUBPART RRRRRR OF PART 63—APPLICABILITY OF GENERAL PROVISIONS TO SUBPART RRRRRR

## Subpart SSSSSS—National Emission Standards for Hazardous Air Pollutants for Glass Manufacturing Area Sources

APPLICABILITY AND COMPLIANCE DATES

63.11448 Am I subject to this subpart?
63.11449 What parts of my plant does this subpart cover?
63.11450 What are my compliance dates?

STANDARDS, COMPLIANCE, AND MONITORING REQUIREMENTS

63.11451 What are the standards for new and existing sources?
63.11452 What are the performance test requirements for new and existing sources?
63.11453 What are the initial compliance demonstration requirements for new and existing sources?
63.11454 What are the monitoring requirements for new and existing sources?
63.11455 What are the continuous compliance requirements for new and existing sources?

NOTIFICATIONS AND RECORDS

63.11456 What are the notification requirements?
63.11457 What are the recordkeeping requirements?

OTHER REQUIREMENTS AND INFORMATION

63.11458 What General Provisions apply to this subpart?
63.11459 What definitions apply to this subpart?
63.11460 Who implements and enforces this subpart?
63.11461 [Reserved]

TABLE 1 TO SUBPART SSSSSS OF PART 63—EMISSION LIMITS
TABLE 2 TO SUBPART SSSSSS OF PART 63—APPLICABILITY OF GENERAL PROVISIONS TO SUBPART SSSSSS

## Subpart TTTTTT—National Emission Standards for Hazardous Air Pollutants for Secondary Nonferrous Metals Processing Area Sources

APPLICABILITY AND COMPLIANCE DATES

63.11462 Am I subject to this subpart?
63.11463 What parts of my plant does this subpart cover?
63.11464 What are my compliance dates?

STANDARDS, COMPLIANCE, AND MONITORING REQUIREMENTS

63.11465 What are the standards for new and existing sources?
63.11466 What are the performance test requirements for new and existing sources?
63.11467 What are the initial compliance demonstration requirements for new and existing sources?
63.11468 What are the monitoring requirements for new and existing sources?
63.11469 What are the notification requirements?
63.11470 What are the recordkeeping requirements?

OTHER REQUIREMENTS AND INFORMATION

63.11471 What General Provisions apply to this subpart?
63.11472 What definitions apply to this subpart?
63.11473 Who implements and enforces this subpart?
63.11474 [Reserved]
TABLE 1 TO SUBPART TTTTTT OF PART 63—APPLICABILITY OF GENERAL PROVISIONS TO SUBPART TTTTTT

## Subpart UUUUUU [Reserved]

## Subpart VVVVVV—National Emission Standards for Hazardous Air Pollutants for Chemical Manufacturing Area Sources

APPLICABILITY AND COMPLIANCE DATES

63.11494 What are the applicability requirements and compliance dates?

STANDARDS AND COMPLIANCE REQUIREMENTS

63.11495 What are the management practices and other requirements?
63.11496 What are the standards and compliance requirements for process vents?
63.11497 What are the standards and compliance requirements for storage tanks?
63.11498 What are the standards and compliance requirements for wastewater systems?
63.11499 What are the standards and compliance requirements for heat exchange systems?
63.11500 What compliance options do I have if part of my plant is subject to both this subpart and another Federal standard?
63.11501 What are the notification, recordkeeping, and reporting requirements, and how may I assert an affirmative defense for violation of emission standards during malfunction?

OTHER REQUIREMENTS AND INFORMATION

63.11502 What definitions apply to this subpart?
63.11503 Who implements and enforces this subpart?
TABLE 1 TO SUBPART VVVVVV OF PART 63—HAZARDOUS AIR POLLUTANTS USED TO DETERMINE APPLICABILITY OF CHEMICAL MANUFACTURING OPERATIONS
TABLE 2 TO SUBPART VVVVVV OF PART 63—EMISSION LIMITS AND COMPLIANCE REQUIREMENTS FOR BATCH PROCESS VENTS
TABLE 3 TO SUBPART VVVVVV OF PART 63—EMISSION LIMITS AND COMPLIANCE REQUIREMENTS FOR CONTINUOUS PROCESS VENTS
TABLE 4 TO SUBPART VVVVVV OF PART 63—EMISSION LIMITS AND COMPLIANCE REQUIREMENTS FOR METAL HAP PROCESS VENTS
TABLE 5 TO SUBPART VVVVVV OF PART 63—EMISSION LIMITS AND COMPLIANCE REQUIREMENTS FOR STORAGE TANKS
TABLE 6 TO SUBPART VVVVVV OF PART 63—EMISSION LIMITS AND COMPLIANCE REQUIREMENTS FOR WASTEWATER SYSTEMS
TABLE 7 TO SUBPART VVVVVV OF PART 63—PARTIALLY SOLUBLE HAP
TABLE 8 TO SUBPART VVVVVV OF PART 63—EMISSION LIMITS AND COMPLIANCE REQUIREMENTS FOR HEAT EXCHANGE SYSTEMS
TABLE 9 TO SUBPART VVVVVV OF PART 63—APPLICABILITY OF GENERAL PROVISIONS TO SUBPART VVVVVV

## Subpart WWWWWW—National Emission Standards for Hazardous Air Pollutants: Area Source Standards for Plating and Polishing Operations

APPLICABILITY AND COMPLIANCE DATES

63.11504 Am I subject to this subpart?
63.11505 What parts of my plant does this subpart cover?
63.11506 What are my compliance dates?

STANDARDS AND COMPLIANCE REQUIREMENTS

63.11507 What are my standards and management practices?
63.11508 What are my compliance requirements?
63.11509 What are my notification, reporting, and recordkeeping requirements?

OTHER REQUIREMENTS AND INFORMATION

63.11510 What General Provisions apply to this subpart?
63.11511 What definitions apply to this subpart?
63.11512 Who implements and enforces this subpart?
63.11513 [Reserved]

TABLE 1 TO SUBPART WWWWWW OF PART 63—APPLICABILITY OF GENERAL PROVISIONS TO PLATING AND POLISHING AREA SOURCES

**Subpart XXXXXX—National Emission Standards for Hazardous Air Pollutants Area Source Standards for Nine Metal Fabrication and Finishing Source Categories**

APPLICABILITY AND COMPLIANCE DATES

63.11514 Am I subject to this subpart?
63.11515 What are my compliance dates?

STANDARDS AND COMPLIANCE REQUIREMENTS

63.11516 What are my standards and management practices?
63.11517 What are my monitoring requirements?
63.11518 [Reserved]
63.11519 What are my notification, recordkeeping, and reporting requirements?
63.11520 [Reserved]

OTHER REQUIREMENTS AND INFORMATION

63.11521 Who implements and enforces this subpart?
63.11522 What definitions apply to this subpart?
63.11523 What General Provisions apply to this subpart?

TABLE 1 TO SUBPART XXXXXX OF PART 63—DESCRIPTION OF SOURCE CATEGORIES AFFECTED BY THIS SUBPART

TABLE 2 TO SUBPART XXXXXX OF PART 63—APPLICABILITY OF GENERAL PROVISIONS TO METAL FABRICATION OR FINISHING AREA SOURCES

**Subpart YYYYYY—National Emission Standards for Hazardous Air Pollutants for Area Sources: Ferroalloys Production Facilities**

APPLICABILITY AND COMPLIANCE DATES

63.11524 Am I subject to this subpart?
63.11525 What are my compliance dates?

STANDARDS, MONITORING, AND COMPLIANCE REQUIREMENTS

63.11526 What are the standards for new and existing ferroalloys production facilities?
63.11527 What are the monitoring requirements for new and existing sources?
63.11528 What are the performance test and compliance requirements for new and existing sources?
63.11529 What are the notification, reporting, and recordkeeping requirements?

OTHER REQUIREMENTS AND INFORMATION

63.11530 What parts of the General Provisions apply to my facility?
63.11531 Who implements and enforces this subpart?
63.11532 What definitions apply to this subpart?
63.11533–63.11543 [Reserved]

TABLE 1 TO SUBPART YYYYYY OF PART 63—APPLICABILITY OF GENERAL PROVISIONS TO SUBPART YYYYYY

**Subpart ZZZZZZ—National Emission Standards for Hazardous Air Pollutants: Area Source Standards for Aluminum, Copper, and Other Nonferrous Foundries**

APPLICABILITY AND COMPLIANCE DATES

63.11544 Am I subject to this subpart?
63.11545 What are my compliance dates?

STANDARDS AND COMPLIANCE REQUIREMENTS

63.11550 What are my standards and management practices?
63.11551 What are my initial compliance requirements?
63.11552 What are my monitoring requirements?
63.11553 What are my notification, reporting, and recordkeeping requirements?

OTHER REQUIREMENTS AND INFORMATION

63.11555 What General Provisions apply to this subpart?
63.11556 What definitions apply to this subpart?
63.11557 Who implements and enforces this subpart?
63.11558 [Reserved]

TABLE 1 TO SUBPART ZZZZZZ OF PART 63—APPLICABILITY OF GENERAL PROVISIONS TO ALUMINUM, COPPER, AND OTHER NONFERROUS FOUNDRIES AREA SOURCES

**Subpart AAAAAAA—National Emission Standards for Hazardous Air Pollutants for Area Sources: Asphalt Processing and Asphalt Roofing Manufacturing**

APPLICABILITY AND COMPLIANCE DATES

63.11559 Am I Subject to this subpart?
63.11560 What are my compliance dates?

STANDARDS AND COMPLIANCE REQUIREMENTS

63.11561 What are my standards and management practices?
63.11562 What are my initial compliance requirements?

63.11563 What are my monitoring requirements?
63.11564 What are my notification, recordkeeping, and reporting requirements?

OTHER REQUIREMENTS AND INFORMATION

63.11565 What general provisions sections apply to this subpart?
63.11566 What definitions apply to this subpart?
63.11567 Who implements and enforces this subpart?

TABLE 1 TO SUBPART AAAAAAA OF PART 63—EMISSION LIMITS FOR ASPHALT PROCESSING (REFINING) OPERATIONS
TABLE 2 TO SUBPART AAAAAAA OF PART 63—EMISSION LIMITS FOR ASPHALT ROOFING MANUFACTURING (COATING) OPERATIONS
TABLE 3 TO SUBPART AAAAAAA OF PART 63—TEST METHODS
TABLE 4 TO SUBPART AAAAAAA OF PART 63—OPERATING LIMITS
TABLE 5 TO SUBPART AAAAAAA OF PART 63—APPLICABILITY OF GENERAL PROVISIONS TO SUBPART AAAAAAA

**Subpart BBBBBBB—National Emission Standards for Hazardous Air Pollutants for Area Sources: Chemical Preparations Industry**

APPLICABILITY AND COMPLIANCE DATES

63.11579 Am I subject to this subpart?
63.11580 What are my compliance dates?

STANDARDS AND COMPLIANCE REQUIREMENTS

63.11581 What are my standards?
63.11582 What are my compliance requirements?
63.11583 What are my monitoring requirements?
63.11584 What are my initial and continuous compliance management practice requirements?
63.11585 What are my notification, recordkeeping, and reporting requirements?

OTHER REQUIREMENTS AND INFORMATION

63.11586 Who implements and enforces this subpart?
63.11587 What General Provisions sections apply to this subpart?
63.11588 What definitions apply to this subpart?

TABLE 1 TO SUBPART BBBBBBB OF PART 63—EMISSION REDUCTION AND PM CONCENTRATION REQUIREMENTS
TABLE 2 TO SUBPART BBBBBBB OF PART 63—INITIAL COMPLIANCE DEMONSTRATION METHODS WITH THE EMISSION REDUCTION AND PM CONCENTRATION REQUIREMENTS IN TABLE 1
TABLE 3 TO SUBPART BBBBBBB OF PART 63—TEST METHODS
TABLE 4 TO SUBPART BBBBBBB OF PART 63—CONTINUOUS COMPLIANCE DEMONSTRATION METHODS WITH THE EMISSION REDUCTION AND PM CONCENTRATION REQUIREMENTS IN TABLE 1
TABLE 5 TO SUBPART BBBBBBB OF PART 63—REPORTING REQUIREMENTS
TABLE 6 TO SUBPART BBBBBBB OF PART 63—GENERAL PROVISIONS

**Subpart CCCCCCC—National Emission Standards for Hazardous Air Pollutants for Area Sources: Paints and Allied Products Manufacturing**

APPLICABILITY AND COMPLIANCE DATES

63.11599 Am I subject to this subpart?
63.11600 What are my compliance dates?

STANDARDS, MONITORING, AND COMPLIANCE REQUIREMENTS

63.11601 What are the standards for new and existing paints and allied products manufacturing facilities?
63.11602 What are the performance test and compliance requirements for new and existing sources?
63.11603 What are the notification, reporting, and recordkeeping requirements?
63.11604 [Reserved]

OTHER REQUIREMENTS AND INFORMATION

63.11605 What General Provisions apply to this subpart?
63.11606 Who implements and enforces this subpart?
63.11607 What definitions apply to this subpart?
63.11608–63.11618 [Reserved]

TABLE 1 TO SUBPART CCCCCCC OF PART 63—APPLICABILITY OF GENERAL PROVISIONS TO SUBPART CCCCCCC

**Subpart DDDDDDD—National Emission Standards for Hazardous Air Pollutants for Area Sources: Prepared Feeds Manufacturing**

APPLICABILITY AND COMPLIANCE DATES

63.11619 Am I subject to this subpart?
63.11620 What are my compliance dates?

STANDARDS, MONITORING, AND COMPLIANCE REQUIREMENTS

63.11621 What are the standards for new and existing prepared feeds manufacturing facilities?
63.11622 What are the monitoring requirements for new and existing sources?
63.11623 What are the testing requirements?
63.11624 What are the notification, reporting, and recordkeeping requirements?

OTHER REQUIREMENTS AND INFORMATION

63.11625 What parts of the General Provisions apply to my facility?
63.11626 Who implements and enforces this subpart?
63.11627 What definitions apply to this subpart?
63.11628–63.11638 [Reserved]
TABLE 1 TO SUBPART DDDDDDD OF PART 63—APPLICABILITY OF GENERAL PROVISIONS TO PREPARED FEEDS MANUFACTURING AREA SOURCES

## Subpart EEEEEEE—National Emission Standards for Hazardous Air Pollutants: Gold Mine Ore Processing and Production Area Source Category

APPLICABILITY AND COMPLIANCE DATES

63.11640 Am I subject to this subpart?
63.11641 What are my compliance dates?

STANDARDS AND COMPLIANCE REQUIREMENTS

63.11645 What are my mercury emission standards?
63.11646 What are my compliance requirements?
63.11647 What are my monitoring requirements?
63.11648 What are my notification, reporting, and recordkeeping requirements?

OTHER REQUIREMENTS AND INFORMATION

63.11650 What General Provisions apply to this subpart?
63.11651 What definitions apply to this subpart?
63.11652 Who implements and enforces this subpart?
63.11653 [Reserved]
TABLE 1 TO SUBPART EEEEEEE OF PART 63—APPLICABILITY OF GENERAL PROVISIONS TO SUBPART EEEEEEE

## Subparts FFFFFFF–GGGGGGG [Reserved]

## Subpart HHHHHHH—National Emission Standards for Hazardous Air Pollutant Emissions for Polyvinyl Chloride and Copolymers Production

WHAT THIS SUBPART COVERS

63.11860 What is the purpose of this subpart?
63.11865 Am I subject to the requirements in this subpart?
63.11870 What is the affected source of this subpart?
63.11871 What is the relationship to 40 CFR part 61, subpart F?
63.11872 What is the relationship to other subparts in this part?
63.11875 When must I comply with this subpart?

EMISSION LIMITS, OPERATING LIMITS AND WORK PRACTICE STANDARDS

63.11880 What emission limits, operating limits and standards must I meet?

GENERAL COMPLIANCE REQUIREMENTS

63.11885 What parts of the General Provisions apply to me?
63.11890 What are my additional general requirements for complying with this subpart?
63.11895 How do I assert an affirmative defense for exceedance of emission standard during malfunction?
63.11896 What am I required to do if I make a process change at my affected source?

TESTING AND COMPLIANCE REQUIREMENTS

63.11900 By what date must I conduct initial performance testing and monitoring, establish any applicable operating limits and demonstrate initial compliance with my emission limits and work practice standards?
63.11905 When must I conduct subsequent performance testing and monitoring to demonstrate continuous compliance?
63.11910 What are my initial and continuous compliance requirements for storage vessels?
63.11915 What are my compliance requirements for equipment leaks?
63.11920 What are my initial and continuous compliance requirements for heat exchange systems?
63.11925 What are my initial and continuous compliance requirements for process vents?
63.11930 What requirements must I meet for closed vent systems?
63.11935 What CEMS and CPMS requirements must I meet to demonstrate initial and continuous compliance with the emission standards for process vents?
63.11940 What continuous monitoring requirements must I meet for control devices required to install CPMS to meet the emission limits for process vents?
63.11945 What performance testing requirements must I meet for process vents?
63.11950 What emissions calculations must I use for an emission profile?
63.11955 What are my initial and continuous compliance requirements for other emission sources?
63.11956 What are my compliance requirements for ambient monitoring?
63.11960 What are my initial and continuous compliance requirements for stripped resin?
63.11965 What are my general compliance requirements for wastewater?
63.11970 What are my initial compliance requirements for process wastewater?

63.11975 What are my continuous compliance requirements for process wastewater?
63.11980 What are the test methods and calculation procedures for process wastewater?

NOTIFICATIONS, REPORTS AND RECORDS

63.11985 What notifications and reports must I submit and when?
63.11990 What records must I keep?
63.11995 In what form and how long must I keep my records?
63.12000 Who implements and enforces this subpart?

DEFINITIONS

63.12005 What definitions apply to this subpart?
63.12006–63.12099 [Reserved]
TABLE 1 TO SUBPART HHHHHHH OF PART 63—EMISSION LIMITS AND STANDARDS FOR EXISTING AFFECTED SOURCES
TABLE 2 TO SUBPART HHHHHHH OF PART 63—EMISSION LIMITS AND STANDARDS FOR NEW AFFECTED SOURCES
TABLE 3 TO SUBPART HHHHHHH OF PART 63—SUMMARY OF CONTROL REQUIREMENTS FOR STORAGE VESSELS AT NEW AND EXISTING SOURCES
TABLE 4 TO SUBPART HHHHHHH OF PART 63—APPLICABILITY OF THE GENERAL PROVISIONS TO PART 63
TABLE 5 TO SUBPART HHHHHHH OF PART 63—OPERATING PARAMETERS, OPERATING LIMITS AND DATA MONITORING, RECORDING AND COMPLIANCE FREQUENCIES FOR PROCESS VENTS
TABLE 6 TO SUBPART HHHHHHH OF PART 63—TOXIC EQUIVALENCY FACTORS
TABLE 7 TO SUBPART HHHHHHH OF PART 63—CALIBRATION AND ACCURACY REQUIREMENTS FOR CONTINUOUS PARAMETER MONITORING SYSTEMS
TABLE 8 TO SUBPART HHHHHHH OF PART 63—METHODS AND PROCEDURES FOR CONDUCTING PERFORMANCE TESTS FOR PROCESS VENTS
TABLE 9 TO SUBPART HHHHHHH OF PART 63—PROCEDURES FOR CONDUCTING SAMPLING OF RESIN AND PROCESS WASTEWATER
TABLE 10 TO SUBPART HHHHHHH OF PART 63—HAP SUBJECT TO THE STRIPPED RESIN AND PROCESS WASTEWATER PROVISIONS AT NEW AND EXISTING SOURCES
APPENDIX A TO PART 63—TEST METHODS
APPENDIX B TO PART 63—SOURCES DEFINED FOR EARLY REDUCTION PROVISIONS
APPENDIX C TO PART 63—DETERMINATION OF THE FRACTION BIODEGRADED ($F_{bio}$) IN A BIOLOGICAL TREATMENT UNIT
APPENDIX D TO PART 63—ALTERNATIVE VALIDATION PROCEDURE FOR EPA WASTE AND WASTEWATER METHODS
APPENDIX E TO PART 63—MONITORING PROCEDURE FOR NONTHOROUGHLY MIXED OPEN BIOLOGICAL TREATMENT SYSTEMS AT KRAFT PULP MILLS UNDER UNSAFE SAMPLING CONDITIONS

AUTHORITY: 42 U.S.C. 7401 *et seq.*

SOURCE: 57 FR 61992, Dec. 29, 1992, unless otherwise noted.

## Subpart NNNNN—National Emission Standards for Hazardous Air Pollutants: Hydrochloric Acid Production

SOURCE: 68 FR 19090, Apr. 17, 2003, unless otherwise noted.

### WHAT THIS SUBPART COVERS

### § 63.8980 What is the purpose of this subpart?

This subpart establishes national emission standards for hazardous air pollutants (NESHAP) and work practice standards for hazardous air pollutants (HAP) emitted from hydrochloric acid (HCl) production. This subpart also establishes requirements to demonstrate initial and continuous compliance with the emission limitations and work practice standards.

### § 63.8985 Am I subject to this subpart?

(a) You are subject to this subpart if you own or operate an HCl production facility that produces a liquid HCl product at a concentration of 30 weight percent or greater during its normal operations and is located at, or is part of, a major source of HAP. This does not include HCl production facilities that only produce occasionally liquid HCl product at a concentration of 30 weight percent or greater.

(1) An HCl production facility is the collection of unit operations and equipment associated with the production of liquid HCl product. The HCl production facility begins at the point where a gaseous stream containing HCl enters the HCl production unit. The HCl production facility includes all HCl storage tanks that contain liquid HCl product that is produced in the HCl production unit, with the exceptions noted in paragraph (a)(2) of this section. The HCl production facility also includes all HCl transfer operations that load HCl product produced in the HCl production unit into a tank truck, rail

car, ship, or barge, along with the piping and other equipment in HCl service used to transfer liquid HCl product from the HCl production unit to the HCl storage tanks and/or HCl transfer operations. The HCl production facility ends at the point that the liquid HCl product produced in the HCl production unit is loaded into a tank truck, rail car, ship, or barge, at the point the HCl product enters another process on the plant site, or at the point the HCl product leaves the plant site via pipeline.

(2) Storage tanks that are dedicated feedstock tanks for another process and storage tanks that store HCl dedicated for use in wastewater treatment are not considered part of an HCl production facility.

(3) A major source of HAP emissions is any stationary source or group of stationary sources within a contiguous area under common control that emits or has the potential to emit any single HAP at a rate of 9.07 megagrams (10 tons) or more per year or any combination of HAP at a rate of 22.68 megagrams (25 tons) or more per year.

(b) An HCl production facility is not subject to this subpart if it is also subject to NESHAP under one of the subparts listed in paragraphs (b)(1) through (5) of this section.

(1) 40 CFR part 63, subpart S, National Emission Standards for Hazardous Air Pollutants from the Pulp and Paper Industry.

(2) 40 CFR part 63, subpart CCC, National Emission Standards for Hazardous Air Pollutants for Steel Pickling—HCl Process Facilities and Hydrochloric Acid Regeneration Plants.

(3) 40 CFR part 63, subpart MMM, National Emission Standards for Hazardous Air Pollutants for Pesticide Active Ingredient Production.

(4) 40 CFR part 63, section 63.994, subpart SS, National Emission Standards for Closed Vent Systems, Control Devices, Recovery Devices and Routing to a Fuel Gas System or a Process.

(5) 40 CFR part 63, subpart GGG, National Emission Standards for Pharmaceuticals Production.

(c) An HCl production facility is not subject to this subpart if it is located following the incineration of chlorinated waste gas streams, waste liquids, or solid wastes, and the emissions from the HCl production facility are subject to section 63.113(c), subpart G, National Emission Standards for Organic Hazardous Air Pollutants from the Synthetic Organic Chemical Manufacturing Industry for Process Vents, Storage Vessels, Transfer Operations, and Wastewater.

(d) An HCl production facility is not subject to this subpart if it produces HCl through the direct synthesis of hydrogen and chlorine and is part of a chlor-alkali facility.

(e) An HCl production facility is not subject to this subpart if it is a research and development facility.

(f) An HCl production facility is not subject to this subpart if all of the gaseous streams containing HCl and chlorine ($Cl_2$) from HCl process vents, HCl storage tanks, and HCl transfer operations are recycled or routed to another process for process purpose, prior to being discharged to the atmosphere.

[68 FR 19090, Apr. 17, 2003, as amended at 71 FR 17745, Apr. 7, 2006; 85 FR 20867, Apr. 15, 2020]

### § 63.8990 What parts of my plant does this subpart cover?

(a) This subpart applies to each new, reconstructed, or existing affected source at an HCl production facility.

(b) The affected source is the group of one or more HCl production facilities at a plant site that are subject to this subpart, and all associated wastewater operations, which contain the collection of emission streams listed in paragraphs (b)(1) through (5) of this section.

(1) Each emission stream from an HCl process vent.

(2) Each emission stream from an HCl storage tank.

(3) Each emission stream from an HCl transfer operation.

(4) Each emission stream resulting from leaks from equipment in HCl service.

(5) Each emission stream from HCl wastewater operations. There are no emission limitations or other requirements in this subpart that apply to HCl wastewater operations.

(c) An affected source is a new affected source if you commenced construction of the affected source after

September 18, 2001 and you met the applicability criteria of § 63.8985 at the time you commenced construction.

(d) An affected source is reconstructed if you meet the criteria as defined in § 63.2.

(e) An affected source is existing if it is not new or reconstructed.

[68 FR 19090, Apr. 17, 2003, as amended at 71 FR 17745, Apr. 7, 2006]

### § 63.8995 When do I have to comply with this subpart?

(a) If you have a new or reconstructed affected source, you must comply with this subpart according to paragraphs (a)(1) or (2) of this section.

(1) If you start up your affected source before April 17, 2003, you must comply with the emission limitations and work practice standards in this subpart no later than April 17, 2003.

(2) If you start up your affected source after April 17, 2003, you must comply with the emission limitations and work practice standards in this subpart upon startup of your affected source.

(b) If you have an existing affected source, you must comply with the emission limitations and work practice standards no later than 3 years after April 17, 2003.

(c) If you have an area source that increases its emissions or its potential to emit such that it becomes a major source of HAP, the provisions in paragraphs (c)(1) and (2) of this section apply.

(1) Any portion of the existing facility that is a new affected source or a new reconstructed source must be in compliance with this subpart upon startup.

(2) All other parts of the source must be in compliance with this subpart no later than the date 3 years after the area source becomes a major source.

(d) You must meet the notification requirements in § 63.9045 according to the schedule in § 63.9045 and in subpart A of this part. Some of the notifications must be submitted before you are required to comply with the emission limitations in this subpart.

## EMISSION LIMITATIONS AND WORK PRACTICE STANDARDS

### § 63.9000 What emission limitations and work practice standards must I meet?

(a) With the exceptions noted in paragraphs (c) and (d) of this section, you must meet the applicable emission limit and work practice standard in table 1 to this subpart for each emission stream listed under § 63.8990(b)(1) through (4) that is part of your affected source.

(b) With the exceptions noted in paragraph (c) of this section, you must meet the applicable operating limit in Table 2 to this subpart for each emission stream listed under § 63.8990(b)(1) through (3) that is part of your affected source.

(c) The emission streams listed in paragraphs (c)(1) through (4) of this section are exempt from the emission limitations, work practice standards, and all other requirements of this subpart.

(1) Emission streams from HCl storage tanks that never store liquid HCl product with a concentration of 30 weight percent or greater.

(2) Emission streams from HCl transfer operations that never load liquid HCl product with a concentration of 30 weight percent or greater.

(3) Emission streams from HCl wastewater operations.

(4) Emission streams from HCl process vents, HCl storage tanks, and HCl transfer operations that are also subject to 40 CFR part 63, subpart EEE, National Emission Standards for Hazardous Air Pollutants for Hazardous Waste Combustors, or 40 CFR 266.107, subpart H, Burning of Hazardous Waste in Boilers and Industrial Furnaces.

(d) The emission limits for HCl storage tanks in table 1 to this subpart do not apply during periods of planned routine maintenance of HCl storage tank control devices. Periods of planned routine maintenance of each HCl storage tank control device, during which the control device does not meet the emission limits specified in table 1 to this subpart, shall not exceed 240 hours per year.

[68 FR 19090, Apr. 17, 2003, as amended at 71 FR 17745, Apr. 7, 2006]

GENERAL COMPLIANCE REQUIREMENTS

### § 63.9005 What are my general requirements for complying with this subpart?

(a) Before October 13, 2020, for each existing source, and for each new or reconstructed source for which construction or reconstruction commenced after April 17, 2003, but before February 5, 2019, you must be in compliance with the emission limitations and work practice standards in this subpart at all times, except during periods of startup, shutdown, and malfunction. After October 13, 2020, for each such source you must be in compliance with the emission limitations in this subpart at all times. For new and reconstructed sources for which construction or reconstruction commenced after February 4, 2019, you must be in compliance with the emissions limitations in this subpart at all times.

(b) Before October 13, 2020, for each existing source, and for each new or reconstructed source for which construction or reconstruction commenced after April 17, 2003, but before February 5, 2019, you must always operate and maintain your affected source, including air pollution control and monitoring equipment, according to the provisions in § 63.6(e)(1)(i). After October 13, 2020 for each such source, and after April 15, 2020 for new and reconstructed sources for which construction or reconstruction commenced after February 4, 2019, at all times you must operate and maintain any affected source, including associated air pollution control equipment and monitoring equipment, in a manner consistent with safety and good air pollution control practices for minimizing emissions. The general duty to minimize emissions does not require you to make any further efforts to reduce emissions if levels required by the applicable standard have been achieved. Determination of whether a source is operating in compliance with operation and maintenance requirements will be based on information available to the Administrator which may include, but is not limited to, monitoring results, review of operation and maintenance procedures, review of operation and maintenance records, and inspection of the source.

(c) Before October 13, 2020, for each existing source, and for each new or reconstructed source for which construction or reconstruction commenced after April 17, 2003, but before February 5, 2019, you must develop a written startup, shutdown, and malfunction plan according to the provisions in § 63.6(e)(3). For each such source, a startup, shutdown, and malfunction plan is not required after October 13, 2020. No startup, shutdown, and malfunction plan is required for any new or reconstructed source for which construction or reconstruction commenced after February 4, 2019.

(d) All monitoring equipment shall be installed, calibrated, maintained, and operated according to manufacturer's specifications or other written procedures that provide adequate assurance that the equipment would reasonably be expected to monitor accurately. For each monitoring system required in this section, you must develop, implement, and submit to the Administrator a site-specific monitoring plan that addresses the installation requirements in paragraphs (d)(1) through (3) of this section, the ongoing procedures in paragraphs (d)(4) through (6) of this section, and the requirements in § 63.9025, as applicable. You must submit the plan with your Notification of Compliance Status. Upon request of the Administrator, you must promptly correct any deficiencies in a site-specific monitoring plan and submit the revised plan.

(1) Installation of the continuous monitoring system (CMS) sampling probe or other interface at a measurement location relative to each affected process unit such that the measurement is representative of control of the exhaust emissions (e.g., on or downstream of the last control device).

(2) Performance and equipment specifications for the sample interface, the pollutant concentration or parametric signal analyzer, and the data collection and reduction system.

(3) Performance evaluation procedures and acceptance criteria (e.g., calibrations).

(4) Before October 13, 2020, for each existing source, and for each new or reconstructed source for which construction or reconstruction commenced after April 17, 2003, but before February 5, 2019, ongoing operation and maintenance (O&M) procedures in accordance with the general requirements of §§ 63.8(c)(1) and (3), (c)(4)(ii), and (c)(7) and (8), and 63.9025. After October 13, 2020 for each such source, and after April 15, 2020 for new and reconstructed sources for which construction or reconstruction commenced after February 4, 2019, ongoing operation and maintenance (O&M) procedures in accordance with the general requirements of §§ 63.8(c)(1)(ii), (c)(3), (c)(4)(ii), and (c)(7) and (8), and 63.9025.

(5) Before October 13, 2020, for each existing source, and for each new or reconstructed source for which construction or reconstruction commenced after April 17, 2003, but before February 5, 2019, ongoing data quality assurance procedures in accordance with the general requirements of § 63.8(d). After October 13, 2020 for each such source, and after April 15, 2020 for new and reconstructed sources for which construction or reconstruction commenced after February 4, 2019, ongoing data quality assurance procedures in accordance with the general requirements of § 63.8(d) except for the requirements related to startup, shutdown, and malfunction plans referenced in § 63.8(d)(3). The owner or operator shall keep these written procedures on record for the life of the affected source or until the affected source is no longer subject to the provisions of this part, to be made available for inspection, upon request, by the Administrator. If the performance evaluation plan is revised, the owner or operator shall keep previous (*i.e.*, superseded) versions of the performance evaluation plan on record to be made available for inspection, upon request, by the Administrator, for a period of 5 years after each revision to the plan. The program of corrective action should be included in the plan required under § 63.8(d)(2).

(6) Before October 13, 2020, for each existing source, and for each new or reconstructed source for which construction or reconstruction commenced after April 17, 2003, but before February 5, 2019, ongoing recordkeeping and reporting procedures in accordance with the general requirements of § 63.10(c) and (e)(1) and (e)(2)(i). After October 13, 2020 for each such source, and after April 15, 2020 for new and reconstructed sources for which construction or reconstruction commenced after February 4, 2019, ongoing recordkeeping and reporting procedures in accordance with the general requirements of § 63.10(c)(1) through (14) and (e)(1) and (e)(2)(i).

[68 FR 19090, Apr. 17, 2003, as amended at 71 FR 20470, Apr. 20, 2006; 85 FR 20867, Apr. 15, 2020]

## TESTING AND INITIAL COMPLIANCE REQUIREMENTS

### § 63.9010 By what date must I conduct performance tests?

(a) If you have a new or reconstructed affected source, you must conduct performance tests within 180 calendar days after the compliance date that is specified for your source in § 63.8995(a) and according to the provisions in § 63.7(a)(2).

(b) If you have an existing affected source, you must conduct performance tests within 180 calendar days after the compliance date that is specified for your existing affected source in § 63.8995(b) and according to the provisions in § 63.7(a)(2).

(c) If you commenced construction or reconstruction between September 18, 2001 and April 17, 2003, you must demonstrate initial compliance with either the proposed emission limitation or the promulgated emission limitation no later than 180 calendar days after April 17, 2003 or within 180 calendar days after startup of the source, whichever is later, according to § 63.7(a)(2)(ix).

### § 63.9015 When must I conduct subsequent performance tests?

(a) You must conduct all applicable performance tests according to the procedures in § 63.9020 on the earlier of your title V operating permit renewal or within 5 years of issuance of your title V permit. For emission points meeting the outlet concentration limits in table 1 to this subpart without

the use of a control device, all applicable performance tests must also be conducted whenever process changes are made that could reasonably be expected to increase the outlet concentration. Examples of process changes include, but are not limited to, changes in production capacity, production rate, feedstock type, or catalyst type, or whenever there is replacement, removal, or addition of recovery equipment. For purposes of this paragraph, process changes do not include: process upsets and unintentional, temporary process changes.

(b) You must report the results of subsequent performance tests within 60 days after the completion of the test. This report should also verify that the operating limits for your affected source have not changed or provide documentation of revised operating limits established as specified in Table 2 to this subpart. The reports for all subsequent performance tests should include all applicable information required in §63.9050.

[68 FR 19090, Apr. 17, 2003, as amended at 71 FR 17745, Apr. 7, 2006]

### §63.9020 What performance tests and other procedures must I use?

(a) You must conduct each performance test in Table 3 to this subpart that applies to you as directed in paragraphs (a)(1) through (4) of this section, except as noted in paragraphs (b) and (c) of this section.

(1) You must develop a site-specific test plan according to §63.7(c)(2) and conduct each performance test according to the site-specific test plan.

(2) Before October 13, 2020, for each existing source, and for each new or reconstructed source for which construction or reconstruction commenced after April 17, 2003, but before February 5, 2019, you must conduct each performance test under representative conditions according to the requirements in §63.7(e)(1) and under the specific conditions that this subpart specifies in Table 3. After October 13, 2020 for each such source, and after April 15, 2020 for new and reconstructed sources for which construction or reconstruction commenced after February 4, 2019, you must conduct each performance test under conditions representative of normal operations. The owner or operator must record the process information that is necessary to document operating conditions during the test and include in such record an explanation to support that such conditions represent normal operation. Upon request, the owner or operator shall make available to the Administrator such records as may be necessary to determine the conditions of performance tests.

(3) You may not conduct performance tests during periods of startup, shutdown, or malfunction.

(4) You must conduct at least three separate test runs for each performance test required in this section, as specified in §63.7(e)(3). Each test run must last at least 1 hour.

(b) If you are complying with a percent reduction emission limitation, you must determine the percent reduction in accordance with paragraphs (b)(1) and (2) of this section.

(1) Calculate the mass rate of either HCl or chlorine using Equations 1 and 2 of this section:

$$E_i = K_2(C_i M_i)Q_i \qquad \text{Equation 1}$$

$$E_o = K_2(C_o M_o)Q_o \qquad \text{Equation 2}$$

where:

$C_i$, $C_o$ = Concentration of HCl or $Cl_2$ in the gas stream at the inlet and outlet of the control device(s), respectively, dry basis, parts per million by volume.

$E_i$, $E_o$ = Mass rate of HCl or $Cl_2$ at the inlet and outlet of the control device(s), respectively, dry basis, kilogram per hour.

$M_i$, $M_o$ = Molecular weight of HCl or $Cl_2$ at the inlet and outlet of the control device(s), respectively, gram/gram-mole.

$Q_i$, $Q_o$ = Flow rate of gas stream at the inlet and outlet of the control device(s), respectively, dry standard cubic meter per minute.

$K_2$ = Constant, $2.494 \times 10^{-6}$ (parts per million)$^{-1}$ (gram-mole per standard cubic meter) (kilogram/gram) (minute/hour), where standard temperature (gram-mole per standard cubic meter) is 20 °C.

(2) Calculate the percent reduction of HCl or $Cl_2$ using Equation 3 of this section:

$$R = \frac{E_i - E_o}{E_i}(100) \qquad \text{Equation 3}$$

where:

R = Control efficiency of control device(s).

$E_i$ = Mass rate of HCl or $Cl_2$ to the inlet to the control device(s), kilograms per hour.
$E_o$ = Mass rate of HCl or $Cl_2$ at the outlet of the control device(s), kilograms per hour.

(c) You may prepare a design evaluation in lieu of conducting a performance test for HCl storage tanks and HCl transfer operations that are not routed to a control device that also controls HCl process vent emissions or any other continuous vent stream. The design evaluation shall include documentation demonstrating that the control technique being used achieves the required control efficiency when a liquid HCl product with a concentration of 30 weight percent or greater is being loaded into the storage tank, or a tank truck, rail car, ship, or barge.

(1) If you use a caustic scrubber control device or a water scrubber control device, the design evaluation shall address the vent stream composition, constituent concentrations, liquid-to-vapor ratio, scrubbing liquid flow rate and concentration, temperature, and the reaction kinetics of the constituents with the scrubbing liquid. The design evaluation shall establish the design exhaust vent concentration level and shall include the additional information in paragraphs (c)(1)(i) and (ii) of this section for trays and a packed column scrubber.

(i) Type and total number of theoretical and actual trays.

(ii) Type and total surface area of packing for entire column and for individual packed sections, if the column contains more than one packed section.

(2) If you use any other control device, the design evaluation shall address the composition and HAP concentration of the vent stream immediately preceding the control device, as well as other parameters necessary to demonstrate that the control technique being used achieves the required control efficiency when a liquid HCl product with a concentration of 30 weight percent or greater is being loaded into the storage tank, or a tank truck, rail car, ship, or barge.

(d) You are not required to conduct a performance test for an emission point for which a performance test was conducted within the previous 5-year period, using the same test methods specified in this section and for which either no deliberate process changes have been made since the test, or the owner or operator can demonstrate that the results of the performance test, with or without adjustments, reliably demonstrate compliance despite process changes. The operating limits reported under the previous performance test shall be sufficient to meet the monitoring requirements in this subpart.

(e) You must establish all operating limits with which you will demonstrate continuous compliance with the applicable emission limits in Table 1 to this subpart as described in paragraphs (e)(1) through (3) of this section.

(1) If you use a caustic scrubber control device or water scrubber control device and you conduct a performance test, you must establish operating limits according to paragraphs (e)(1)(i) and (ii) of this section. If a series of control devices are used, you must establish separate operating limits for each device.

(i) You must establish the minimum value as the operating limit for scrubber inlet liquid or recirculating liquid flow rate, as appropriate. The minimum value shall be based on the scrubber inlet liquid or recirculating liquid flow rate, as appropriate, values measured during the performance test.

(ii) You must establish the minimum and maximum values as the operating limits for scrubber effluent pH. The minimum and maximum values shall be based on the scrubber effluent pH values measured during the performance test.

(2) If you use any other control device and you conduct a performance test, you must establish operating limits according to your site-specific test plan submitted in accordance with § 63.7(c)(2)(i). The operating limits shall be based on the operating parameter values measured during the performance test. If a series of control devices are used, you must establish separate operating limits for each device.

(3) If you do not conduct a performance test for a HCl storage tank or HCl transfer operation, you must use engineering assessments and/or manufacturer's recommendations to establish the operating limits specified in paragraphs (e)(1)(i) and (ii), or (e)(2), of this section.

(4) As needed in applicability determinations, you must use ASTM E224 to determine the HCl concentration in liquid products.

[68 FR 19090, Apr. 17, 2003, as amended at 85 FR 20867, Apr. 15, 2020]

### § 63.9025 What are my monitoring installation, operation, and maintenance requirements?

(a) For each operating parameter that you are required by § 63.9020(e) to monitor, you must install, operate, and maintain each CMS according to the requirements in paragraphs (a)(1) through (6) of this section.

(1) You must operate your CMS and collect data at all times the process is operating.

(2) You must collect data from at least four equally spaced periods each hour.

(3) For at least 75 percent of the operating hours in a 24-hour period, you must have valid data (as defined in your site-specific monitoring plan) for at least 4 equally spaced periods each hour.

(4) For each hour that you have valid data from at least four equally spaced periods, you must calculate the hourly average value using all valid data or, where data are collected from an automated CMS, using at least one measured value per minute if measured more frequently than once per minute.

(5) You must calculate the daily average using all of the hourly averages calculated according to paragraph (a)(4) of this section for the 24-hour period.

(6) You must record the results for each inspection, calibration, and validation check as specified in your site-specific monitoring plan.

(b) For scrubber control devices, you may request approval, in accordance with § 63.8(f), to monitor parameters other than those specified in § 63.9020(e). In accordance with § 63.8(f), you must submit a monitoring plan to the Administrator and the plan must meet the requirements in paragraphs (a) and (b)(1) through (3) of this section. You must conduct monitoring in accordance with the plan submitted to the Administrator unless comments received from the Administrator require an alternate monitoring scheme.

(1) Identify the operating parameter to be monitored to ensure that the control or capture efficiency measured during the initial compliance test is maintained.

(2) Discuss why this parameter is appropriate for demonstrating ongoing compliance.

(3) Identify the specific monitoring procedures.

(c) For any other control device, you must ensure that the CMS is operated according to a monitoring plan submitted to the Administrator as required by § 63.8(f). The monitoring plan must meet the requirements in paragraphs (a) and (c)(1) through (3) of this section. You must conduct monitoring in accordance with the plan submitted to the Administrator, as amended, unless comments received from the Administrator require an alternate monitoring scheme.

(1) Identify the operating parameter to be monitored to ensure that the control or capture efficiency measured during the initial compliance test is maintained.

(2) Discuss why this parameter is appropriate for demonstrating ongoing compliance.

(3) Identify the specific monitoring procedures.

[68 FR 19090, Apr. 17, 2003, as amended at 71 FR 17745, Apr. 7, 2006; 85 FR 20868, Apr. 15, 2020]

### § 63.9030 How do I demonstrate initial compliance with the emission limitations and work practice standards?

(a) You must demonstrate initial compliance with each emission limit and work practice standard that applies to you according to Table 4 to this subpart.

(b) You must establish each site-specific operating limit in Table 2 to this subpart that applies to you according to the requirements in § 63.9020 and Table 3 to this subpart.

(c) For existing sources and for new or reconstructed sources which commenced construction or reconstruction after April 17, 2003, but before February 5, 2019, before October 13, 2020, you must submit the Notification of Compliance Status containing the results

of the initial compliance demonstration according to the requirements in § 63.9045(f) and (g). After October 13, 2020 for such sources, and after April 15, 2020 for new or reconstructed sources which commence construction or reconstruction after February 4, 2019, you must submit the Notification of Compliance Status containing the results of the initial compliance demonstration according to the requirements in §§ 63.9045(f) and (g) and 63.9050(d).

[68 FR 19090, Apr. 17, 2003, as amended at 85 FR 20868, Apr. 15, 2020]

CONTINUOUS COMPLIANCE REQUIREMENTS

### § 63.9035 How do I monitor and collect data to demonstrate continuous compliance?

(a) You must monitor and collect data according to this section.

(b) If you use a caustic scrubber or a water scrubber/absorber to meet the emission limits in Table 1 to this subpart, you must keep the records specified in paragraphs (b)(1) and (2) of this section to support your compliance demonstration.

(1) Records of daily average scrubber inlet liquid or recirculating liquid flow rate, as appropriate.

(2) Records of the daily average scrubber effluent pH.

(c) If you use any other control device to meet the emission limits in Table 1 to this subpart, you must keep records of the operating parameter values identified in your monitoring plan in § 63.9025(c) to support your compliance demonstration.

(d) Except for monitor malfunctions, associated repairs, and required quality assurance or control activities (including, as applicable, calibration checks and required zero and span adjustments), you must monitor continuously (or collect data at all required intervals) at all times that the affected source is operating. This includes periods of startup, shutdown, or malfunction when the affected source is operating. A monitoring malfunction includes, but is not limited to, any sudden, infrequent, not reasonably preventable failure of the monitoring equipment to provide valid data. Monitoring failures that are caused in part by poor maintenance or careless operation are not malfunctions.

(e) You may not use data recorded during monitoring malfunctions, associated repairs, and required quality assurance or control activities in data averages and calculations used to report emission or operating levels, nor may such data be used in fulfilling a minimum data availability requirement, if applicable. You must use all the data collected during all other periods in assessing the operation of the control device and associated control system.

### § 63.9040 How do I demonstrate continuous compliance with the emission limitations and work practice standards?

(a) You must demonstrate continuous compliance with each emission limit and work practice standard in Table 1 to this subpart that applies to you according to Table 4 to this subpart.

(b) You must demonstrate continuous compliance with each operating limit in Table 2 of this subpart that applies to you according to Tables 4 and 5 to this subpart.

(c) You must report each instance in which you did not meet an emission limit, work practice standard or operating limit in Table 1 or 2 to this subpart, respectively, that applies to you. This includes periods of startup, shutdown, and malfunction. These instances are deviations from the emission limitations in this subpart. These deviations must be reported according to the requirements in § 63.9050.

(d) [Reserved]

(e) For existing sources and for new or reconstructed sources which commenced construction or reconstruction after April 17, 2003, but before February 5, 2019, before October 13, 2020, consistent with §§ 63.6(e) and 63.7(e)(1), deviations that occur during a period of startup, shutdown, or malfunction are not violations if you demonstrate to the Administrator's satisfaction that you were operating in accordance with § 63.6(e)(1). The Administrator will determine whether deviations that occur during a period of startup, shutdown, or malfunction are violations, according to the provisions in § 63.6(e). After

October 13, 2020 for such sources, and after April 15, 2020 for new and reconstructed sources which commence construction or reconstruction after February 4, 2019, the exemptions for periods of startup, shutdown, and malfunction in § 63.6(e) no longer apply.

(f) An owner or operator may designate a process vent as a maintenance vent if the vent is only used as a result of startup or shutdown, of equipment where equipment is emptied, depressurized, degassed or placed into service. The owner or operator does not need to designate a maintenance vent as a HCl process vent, HCl storage tank vent, or an HCl transfer operation. The owner or operator must comply with the applicable requirements in paragraphs (f)(1) and (2) of this section for each maintenance vent by October 13, 2020 or the date of startup for new and reconstructed sources, whichever is later, unless an extension is requested in accordance with the provisions in § 63.6(i).

(1) Prior to venting to the atmosphere, process liquids must be removed from the equipment as much as practical and the equipment must be washed with water or purged with air or otherwise depressurized to a control device, fuel gas system, or back to the process to remove the HCl and $Cl_2$ until the equipment served by the maintenance vent contains less than 20 pounds of HCl or $Cl_2$.

(2) For maintenance vents complying with the requirements in paragraph (f)(1) of this section, the owner or operator shall demonstrate the mass of HCl or $Cl_2$ in the equipment served by the maintenance vent is less than 20 pounds for each maintenance activity based on the equipment size and contents after considering any contents drained or purged from the equipment. Equipment size may be determined from equipment design specifications. Equipment contents may be determined using process knowledge. The owner or operator must maintain records for five years of the number of maintenance activities for which maintenance vent provisions are used during each reporting period.

[68 FR 19090, Apr. 17, 2003, as amended at 71 FR 20470, Apr. 20, 2006; 85 FR 20868, Apr. 15, 2020]

NOTIFICATIONS, REPORTS, AND RECORDS

### § 63.9045 What notifications must I submit and when?

(a) You must submit all of the notifications in §§ 63.7(b) and (c), 63.8(f)(4) and (6), and 63.9 (b) through (h) that apply to you by the dates specified.

(b) As specified in § 63.9(b)(2), if you start up your affected source before April 17, 2003, you must submit an Initial Notification not later than 120 calendar days after April 17, 2003, or no later than 120 days after the source becomes subject to this subpart, whichever is later.

(c) As specified in § 63.9(b)(4), if you start up your new or reconstructed affected source on or after April 17, 2003, you must submit the application for construction or reconstruction required by § 63.9(b)(1)(iii) in lieu of the initial notification.

(d) You must submit a notification of intent to conduct a performance test at least 60 calendar days before the performance test is scheduled to begin, as required in § 63.7(b)(1).

(e) [Reserved]

(f) You must submit the Notification of Compliance Status, including the performance test results, within 180 calendar days after the applicable compliance dates specified in § 63.8995.

(g) The Notification of Compliance Status must also include the information in paragraphs (g)(1) through (2) of this section that applies to you.

(1) Each operating parameter value averaged over the full period of the performance test (for example, average pH).

(2) Each operating parameter range within which HAP emissions are reduced to the level corresponding to meeting the applicable emission limits in Table 1 to this subpart.

[68 FR 19090, Apr. 17, 2003, as amended at 71 FR 17745, Apr. 7, 2006; 85 FR 20868, Apr. 15, 2020; 85 FR 73916, Nov. 19, 2020]

### § 63.9050 What reports must I submit and when?

(a) You must submit a compliance report that includes the information in paragraphs (c) through (e) of this section, as applicable, as specified in table 6 to this subpart.

(b) Unless the Administrator has approved a different schedule for submission of reports under § 63.10(a), you must submit each report according to paragraphs (b)(1) through (5) of this section.

(1) The first compliance report must cover the period beginning on the compliance date that is specified for your affected source in § 63.8995 and ending on June 30 or December 31, whichever date is the first date following the end of the first calendar half after the compliance date that is specified for your source in § 63.8995 (i.e., June 30, 2006, for sources existing on April 17, 2006).

(2) The first compliance report must be postmarked or delivered no later than July 31 or January 31, whichever date follows the end of the first calendar half after the compliance date that is specified for your affected source in § 63.8995 (i.e., July 31, 2006, for sources existing on April 17, 2006).

(3) Each subsequent compliance report must cover the semiannual reporting period from January 1 through June 30 or the semiannual reporting period from July 1 through December 31.

(4) Each subsequent compliance report must be postmarked or delivered no later than July 31 or January 31, whichever date is the first date following the end of the semiannual reporting period.

(5) For each affected source that is subject to permitting regulations pursuant to 40 CFR part 70 or 71, and if the permitting authority has established dates for submitting semiannual reports pursuant to 40 CFR 70.6 (a)(3)(iii)(A) or 71.6 (a)(3)(iii)(A), you may submit the first and subsequent compliance reports according to the dates the permitting authority has established instead of according to the dates in paragraphs (b)(1) through (4) of this section.

(c) The compliance report must contain the following information in paragraphs (c)(1) through (10) of this section.

(1) Company name and address.

(2) Statement by a responsible official with that official's name, title, and signature, certifying the truth, accuracy, and completeness of the content of the report.

(3) Date of report and beginning and ending dates of the reporting period.

(4) For existing sources and for new or reconstructed sources for which construction or reconstruction commenced after April 17, 2003, but before February 5, 2019, before October 13, 2020, if you had a startup, shutdown, or malfunction during the reporting period and you took actions consistent with your startup, shutdown, and malfunction plan, the compliance report must include the information in § 63.10(d)(5)(i). A startup, shutdown, and malfunction plan and the information in § 63.10(d)(5)(i) is not required after October 13, 2020.

(5) For existing sources and for new or reconstructed sources which commenced construction or reconstruction after April 17, 2003, but before February 5, 2019, before October 13, 2020, if there are no deviations from any emission limitations that apply to you, a statement that there were no deviations from the emission limitations during the reporting period.

(6) If there were no periods during which the CMS was out-of-control in accordance with the monitoring plan, a statement that there were no periods during which the CMS was out-of-control during the reporting period.

(7) Verification that you continue to use the equipment LDAR plan and information that explains any periods when the procedures in the plan were not followed and the corrective actions were not taken.

(8) If you did not make revisions to your site-specific monitoring plan and/or LDAR plan during the reporting period, a statement that you did not make any revisions to your site-specific monitoring plan and/or LDAR plan during the reporting period. If you made revisions to your site-specific monitoring plan and/or LDAR plan during the reporting period, a copy of the revised plan.

(9) If you meet the outlet concentration limit in table 1 to this subpart without the use of a control device for any emission point, verification that you have not made any process changes that could reasonably be expected to increase the outlet concentration since your most recent performance test for that emission point.

(10) The information specified in paragraphs (c)(10)(i) and (ii) of this section for those planned routine maintenance operations that caused or may cause an HCl storage tank control device not to meet the emission limits in table 1 to this subpart, as applicable.

(i) A description of the planned routine maintenance that was performed for each HCl storage tank control device during the reporting period. This description shall include the type of maintenance performed and the total number of hours during the reporting period that the HCl storage tank control device did not meet the emission limits in table 1 to this subpart, as applicable, due to planned routine maintenance.

(ii) A description of the planned routine maintenance that is anticipated to be performed for each HCl storage tank control device during the next reporting period. This description shall include the type of maintenance necessary, planned frequency of maintenance, and lengths of maintenance periods.

(d) For each deviation from an emission limitation occurring at an affected source where you are using a continuous monitoring system (CMS) to comply with the emission limitation in this subpart, you must include the information in paragraphs (c)(1) through (6) of this section and the following information in paragraphs (d)(1) through (9) of this section and § 63.10(e)(3)(vi). This includes periods of startup, shutdown, and malfunction.

(1) The date and time that each malfunction started and stopped.

(2) The date and time that each CMS was inoperative, except for zero (low-level) and high-level checks.

(3) The date, time, and duration that each CMS was out-of-control, including the information in § 63.8(c)(8).

(4) The date and time that each deviation started and stopped, and whether each deviation occurred during a period of startup, shutdown, or malfunction or during another period.

(5) A summary of the total duration of the deviation during the reporting period and the total duration as a percent of the total source operating time during that reporting period.

(6) A breakdown of the total duration of the deviations during the reporting period into those that are due to startup, shutdown, control equipment problems, process problems, other known causes, and other unknown causes.

(7) A summary of the total duration of CMS downtime during the reporting period, and the total duration of CMS downtime as a percent of the total source operating time during that reporting period.

(8) A brief description of the process units.

(9) A description of any changes in CMS, processes, or controls since the last reporting period.

(e) Each affected source that has obtained a title V operating permit pursuant to 40 CFR part 70 or 71 must report all deviations as defined in this subpart in the semiannual monitoring report required by 40 CFR 70.6(a)(3)(iii)(A) or 71.6(a)(3)(iii)(A). If an affected source submits a compliance report pursuant to Table 6 to this subpart along with, or as part of, the semiannual monitoring report required by 40 CFR 70.6(a)(3)(iii)(A) or 71.6(a)(3)(iii)(A), and the compliance report includes all required information concerning deviations from any emission limitation in this subpart, submission of the compliance report shall be deemed to satisfy any obligation to report the same deviations in the semiannual monitoring report. However, submission of a compliance report shall not otherwise affect any obligation the affected source may have to report deviations from permit requirements to the permit authority.

(f) For existing sources and for new or reconstructed sources which commenced construction or reconstruction after April 17, 2003, but before February 5, 2019, before October 13, 2020, for each startup, shutdown, or malfunction during the reporting period that is not consistent with your startup, shutdown, and malfunction plan you must submit an immediate startup, shutdown and malfunction report. Unless the Administrator has approved a different schedule for submission of reports under § 63.10(a), you must submit each report according to paragraphs

(f)(1) and (2) of this section. An immediate startup, shutdown, and malfunction report is not required after October 13, 2020.

(1) An initial report containing a description of the actions taken for the event must be submitted by fax or telephone within 2 working days after starting actions inconsistent with the plan.

(2) A follow-up report containing the information listed in § 63.10(d)(5)(ii) must be submitted within 7 working days after the end of the event unless you have made alternative reporting arrangements with the permitting authority.

(g) Within 60 days after the date of completing each performance test required by this subpart, you must submit the results of the performance test following the procedures specified in paragraphs (g)(1) through (3) of this section.

(1) *Data collected using test methods supported by the EPA's Electronic Reporting Tool (ERT) as listed on the EPA's ERT website (https://www.epa.gov/electronic-reporting-air-emissions/electronic-reporting-tool-ert) at the time of the test.* Submit the results of the performance test to the EPA via the Compliance and Emissions Data Reporting Interface (CEDRI). CEDRI can be accessed through the EPA's Central Data Exchange (CDX) *(https://cdx.epa.gov/)*. The data must be submitted in a file format generated through the use of the EPA's ERT. Alternatively, you may submit an electronic file consistent with the extensible markup language (XML) schema listed on the EPA's ERT website.

(2) *Data collected using test methods that are not supported by the EPA's ERT as listed on the EPA's ERT website at the time of the test.* Submit the results of the performance test as an attachment in the ERT.

(3) *Confidential business information (CBI).* If you claim some of the information submitted under paragraph (g)(1) of this section is CBI, you must submit a complete file, including information claimed to be CBI, to the EPA. The file must be generated through the use of the EPA's ERT or an alternate electronic file consistent with the XML schema listed on the EPA's ERT website. Submit the file on a compact disc, flash drive or other commonly used electronic storage medium and clearly mark the medium as CBI. Mail the electronic medium to U.S. EPA/OAQPS/CORE CBI Office, Attention: Group Leader, Measurement Policy Group, MD C404–02, 4930 Old Page Rd., Durham, NC 27703. The same file with the CBI omitted must be submitted to the EPA via the EPA's CDX as described in paragraph (g)(1) of this section.

(h) Within 60 days after the date of completing each CMS performance evaluation (as defined in § 63.2), you must submit the results of the performance evaluation following the procedures specified in paragraphs (h)(1) through (3) of this section.

(1) *Performance evaluations of CMS measuring relative accuracy test audit (RATA) pollutants that are supported by the EPA's ERT as listed on the EPA's ERT website at the time of the evaluation.* Submit the results of the performance evaluation to the EPA via CEDRI, which can be accessed through the EPA's CDX. The data must be submitted in a file format generated through the use of the EPA's ERT. Alternatively, you may submit an electronic file consistent with the XML schema listed on the EPA's ERT website.

(2) *Performance evaluations of CMS measuring RATA pollutants that are not supported by the EPA's ERT as listed on the EPA's ERT website at the time of the evaluation.* Submit the results of the performance evaluation as an attachment in the ERT.

(3) *Confidential business information (CBI).* If you claim some of the information submitted under paragraph (g)(1) of this section is CBI, you must submit a complete file, including information claimed to be CBI, to the EPA. The file must be generated through the use of the EPA's ERT or an alternate electronic file consistent with the XML schema listed on the EPA's ERT website. Submit the file on a compact disc, flash drive or other commonly used electronic storage medium and clearly mark the medium as CBI. Mail the electronic medium to U.S. EPA/OAQPS/CORE CBI Office, Attention: Group Leader, Measurement Policy

Group, MD C404–02, 4930 Old Page Rd., Durham, NC 27703. The same file with the CBI omitted must be submitted to the EPA via the EPA's CDX as described in paragraph (g)(1) of this section.

(i) You must submit to the Administrator compliance reports. Beginning on April 16, 2021 or 1 year after the appropriate electronic reporting template becomes available on the CEDRI website, whichever is later, submit all subsequent reports following the procedure specified in paragraph (l) of this section.

(j) You must submit to the Administrator performance evaluations. Beginning on April 16, 2021 or 1 year after the appropriate electronic reporting template becomes available on the CEDRI website, whichever is later, submit all subsequent reports following the procedure specified in paragraph (l) of this section.

(k) You must submit to the Administrator a Notification of Compliance Status. Beginning on April 16, 2021 or 1 year after the appropriate electronic reporting template becomes available on the CEDRI website, whichever is later, submit all subsequent reports following the procedure specified in paragraph (l) of this section.

(l) If you are required to submit reports following the procedure specified in this paragraph, you must submit reports to the EPA via CEDRI. CEDRI can be accessed through the EPA's CDX (*https://cdx.epa.gov/*). You must use the appropriate electronic report template on the CEDRI website (*https://www.epa.gov/electronic-reporting-air-emissions/compliance-and-emissions-data-reporting-interface-cedri*) for this subpart. The date report templates become available will be listed on the CEDRI website. The report must be submitted by the deadline specified in this subpart, regardless of the method in which the report is submitted. If you claim some of the information required to be submitted via CEDRI is CBI, submit a complete report, including information claimed to be CBI, to the EPA. The report must be generated using the appropriate form on the CEDRI website. Submit the file on a compact disc, flash drive, or other commonly used electronic storage medium and clearly mark the medium as CBI. Mail the electronic medium to U.S. EPA/OAQPS/CORE CBI Office, Attention: Group Leader, Measurement Policy Group, MD C404–02, 4930 Old Page Rd., Durham, NC 27703. The same file with the CBI omitted must be submitted to the EPA via the EPA's CDX as described earlier in this paragraph.

(m) If you are required to electronically submit a report through CEDRI in the EPA's CDX, you may assert a claim of EPA system outage for failure to timely comply with the reporting requirement. To assert a claim of EPA system outage, you must meet the requirements outlined in paragraphs (m)(1) through (7) of this section.

(1) You must have been or will be precluded from accessing CEDRI and submitting a required report within the time prescribed due to an outage of either the EPA's CEDRI or CDX systems.

(2) The outage must have occurred within the period of time beginning 5 business days prior to the date that the submission is due.

(3) The outage may be planned or unplanned.

(4) You must submit notification to the Administrator in writing as soon as possible following the date you first knew, or through due diligence should have known, that the event may cause or caused a delay in reporting.

(5) You must provide to the Administrator a written description identifying:

(i) The date, time and length of the outage;

(ii) A rationale for attributing the delay in reporting beyond the regulatory deadline to EPA system outage;

(iii) Measures taken or to be taken to minimize the delay in reporting; and

(iv) The date by which you propose to report, or if you have already met the reporting requirement at the time of the notification, the date you reported.

(6) The decision to accept the claim of EPA system outage and allow an extension to the reporting deadline is solely within the discretion of the Administrator.

(7) In any circumstance, the report must be submitted electronically as soon as possible after the outage is resolved.

(n) If you are required to electronically submit a report through CEDRI in the EPA's CDX, you may assert a claim of *force majeure* for failure to timely comply with the reporting requirement. To assert a claim of *force majeure*, you must meet the requirements outlined in paragraphs (n)(1) through (5) of this section.

(1) You may submit a claim if a *force majeure* event is about to occur, occurs, or has occurred or there are lingering effects from such an event within the period of time beginning 5 business days prior to the date the submission is due. For the purposes of this section, a *force majeure* event is defined as an event that will be or has been caused by circumstances beyond the control of the affected facility, its contractors, or any entity controlled by the affected facility that prevents you from complying with the requirement to submit a report electronically within the time period prescribed. Examples of such events are acts of nature (*e.g.*, hurricanes, earthquakes, or floods), acts of war or terrorism, or equipment failure or safety hazard beyond the control of the affected facility (*e.g.*, large scale power outage).

(2) You must submit notification to the Administrator in writing as soon as possible following the date you first knew, or through due diligence should have known, that the event may cause or caused a delay in reporting.

(3) You must provide to the Administrator:

(i) A written description of the *force majeure* event;

(ii) A rationale for attributing the delay in reporting beyond the regulatory deadline to the *force majeure* event;

(iii) Measures taken or to be taken to minimize the delay in reporting; and

(iv) The date by which you propose to report, or if you have already met the reporting requirement at the time of the notification, the date you reported.

(4) The decision to accept the claim of *force majeure* and allow an extension to the reporting deadline is solely within the discretion of the Administrator.

(5) In any circumstance, the reporting must occur as soon as possible after the *force majeure* event occurs.

[68 FR 19090, Apr. 17, 2003, as amended at 71 FR 17745, Apr. 7, 2006; 85 FR 20868, Apr. 15, 2020]

### § 63.9055 What records must I keep?

(a) You must keep a copy of each notification and report that you submitted to comply with this subpart, including all documentation supporting any Initial Notification or Notification of Compliance Status that you submitted, as required in § 63.10(b)(2)(xiv).

(b) You must also keep the following records specified in paragraphs (b)(1) through (5) of this section.

(1) For existing sources and for new or reconstructed sources which commenced construction or reconstruction after April 17, 2003, but before February 5, 2019, before October 13, 2020, the records in § 63.6(e)(3)(iii) through (v) related to startup, shutdown, and malfunction for a period of 5 years. A startup, shutdown, and malfunction plan is not required after October 13, 2020.

(2) Records of performance tests as required in § 63.10(b)(2)(viii).

(3) Records of operating parameter values that are consistent with your monitoring plan.

(4) Records of the date and time that each deviation started and stopped and whether the deviation occurred during a period of startup, shutdown, or malfunction or during another period.

(5) Copies of the current versions of the site-specific monitoring plan and the equipment LDAR plan. You also must submit copies of these plans and any revisions or updates to the Administrator for comment only (not for approval).

(6) Records of the planned routine maintenance performed on each HCl storage tank control device including the duration of each time the control device does not meet the emission limits in table 1 to this subpart, as applicable, due to planned routine maintenance. Such a record shall include the information specified in paragraphs (b)(6)(i) and (ii) of this section.

(i) The first time of day and date the emission limits in table 1 to this subpart, as applicable, were not met at the

beginning of the planned routine maintenance, and

(ii) The first time of day and date the emission limits in table 1 to this subpart, as applicable, were met at the conclusion of the planned routine maintenance.

(c) After October 13, 2020, you must keep records of each deviation specified in paragraphs (c)(1) through (3) of this section.

(1) For each deviation record the date, time, and duration of each deviation.

(2) For each deviation, record and retain a list of the affected sources or equipment, an estimate of the quantity of each regulated pollutant emitted over any emission limit and a description of the method used to estimate the emissions.

(3) Record actions taken to minimize emissions in accordance with § 63.9005(b), and any corrective actions taken to return the affected unit to its normal or usual manner of operation.

(d) Any records required to be maintained by this part that are submitted electronically via the EPA's CEDRI may be maintained in electronic format. This ability to maintain electronic copies does not affect the requirement for facilities to make records, data, and reports available upon request to a delegated air agency or the EPA as part of an on-site compliance evaluation.

[68 FR 19090, Apr. 17, 2003, as amended at 71 FR 17746, Apr. 7, 2006; 85 FR 20870, Apr. 15, 2020]

### § 63.9060 In what form and how long must I keep my records?

(a) Your records must be in a form suitable and readily available for expeditious inspection and review, according to § 63.10(b)(1).

(b) As specified in § 63.10(b)(1), you must keep each record for 5 years following the date of each occurrence, measurement, maintenance, corrective action, report, or record.

(c) You must keep each record on site, or readily accessible from on site through a computer or other means, for at least 2 years after the date of each occurrence, measurement, maintenance, corrective action, report, or record, according to § 63.10(b)(1). You can keep the records off site for the remaining 3 years. Records may be maintained in hard copy or computer-readable format including, but not limited to, on paper, microfilm, hard disk drive, floppy disk, compact disk, magnetic tape, or microfiche.

(d) You must keep each previous (i.e., superseded) version of the site-specific monitoring plan and the LDAR plan for a period of 5 years after revision of the plan. If, at any time after adoption of a site-specific monitoring plan or an LDAR plan, your affected source ceases operation or is otherwise no longer subject to the provisions of this subpart, you must retain a copy of the most recent plan for 5 years from the date your source ceases operation or is no longer subject to this subpart.

## Other Requirements and Information

### § 63.9065 What parts of the General Provisions apply to me?

(a) Table 7 to this subpart shows which parts of the General Provisions in §§ 63.1 through 63.15 apply to you.

### § 63.9070 Who implements and enforces this subpart?

(a) This subpart can be implemented and enforced by us, the U.S. EPA, or a delegated authority such as your State, local, or tribal agency. If the U.S. EPA Administrator has delegated authority to your State, local, or tribal agency, then that agency, as well as U.S. EPA, has the authority to implement and enforce this subpart. You should contact your U.S. EPA Regional Office to find out if this subpart is delegated to your State, local, or tribal agency.

(b) In delegating implementation and enforcement authority of this subpart to a State, local, or tribal agency under section 40 CFR part 63, subpart E, the authorities contained in paragraph (c) of this section are retained by the Administrator of U.S. EPA and are not transferred to the State, local, or tribal agency.

(c) The authorities in paragraphs (c)(1) through (4) of this section that cannot be delegated to State, local, or tribal agencies are as follows.

(1) Approval of alternatives to requirements in §§ 63.8980, 63.8985, 63.8990, 63.8995, and 63.9000.

(2) Approval of major changes to test methods under § 63.7(e)(2)(ii) and (f) and as defined in § 63.90.

(3) Approval of major changes to monitoring under § 63.8(f) and as defined in § 63.90.

(4) Approval of major changes to recordkeeping and reporting under § 63.10(f) and as defined in § 63.90.

### § 63.9075 What definitions apply to this subpart?

Terms used in this subpart are defined in the Clean Air Act in 40 CFR 63.2 and in this section as follows:

*Caustic scrubber control device* means any add-on device that mixes an aqueous stream or slurry containing a caustic substance with the exhaust gases from an HCl process vent, HCl storage tank, or HCl transfer operation to control emissions of HCl and/or $Cl_2$.

*Chlor-alkali facility* means a facility where chlorine and sodium or potassium hydroxide are produced as co-products and hydrogen is produced as a by-product in an electrolytic process using either mercury cells, diaphragm cells, or membrane cells.

*Continuous monitoring system*, for purposes of the final rule, means liquid flow monitoring devices that meet the performance specifications given in § 63.9025(a); or pH monitoring devices that meet the performance specifications given in § 63.9025(a); or other control devices as mentioned in 63.9025(a) and (b) or § 63.9025(a) and (c).

*Control device* means an add-on device used to reduce HCl and/or $Cl_2$ emissions from an HCl process vent, HCl storage tank, or HCl transfer operation at an HCl production facility. An HCl production unit is not a control device.

*Deviation* means any instance in which an affected source subject to this subpart, or an owner or operator of such a source:

(1) Fails to meet any requirement or obligation established by this subpart, including but not limited to any emission limitation or work practice standard;

(2) Fails to meet any term or condition that is adopted to implement an applicable requirement in this subpart and that is included in the operating permit for any affected source required to obtain such a permit; or

(3) Fails to meet any emission limitation or work practice standard in this subpart during startup, shutdown, or malfunction, regardless of whether or not such failure is permitted by this subpart.

*Emission limitation* means any emission limit or operating limit.

*Emission stream* means a gaseous stream from an HCl process vent, an HCl storage tank, an HCl transfer operation, leaking equipment in HCl service, or HCl wastewater operations that is discharged to the atmosphere. Gaseous streams from HCl process vents, HCl storage tanks, and HCl transfer operations that are routed to another process or recycled for reaction or other use (i.e., for pH control) of the HCl and/or $Cl_2$ are not emission streams. Gaseous streams from HCl transfer operations that are vapor balanced to an HCl storage tank subject to this subpart are not emission streams.

*Equipment in HCl service* means each pump, compressor, agitator, pressure relief device, sampling connection system, open-ended valve or line, valve, connector, and instrumentation system in an HCl production facility that contains 30 weight percent or greater of liquid HCl or 5 weight percent or greater of gaseous HCl at any time.

*HCl process vent* means the point of discharge to the atmosphere, or point of entry into a control device, of a gaseous stream that originates from an HCl production unit. The following points of discharge are not HCl process vents:

(1) A leak from equipment in HCl service subject to this subpart.

(2) An exit from a control device used to comply with this subpart.

(3) An HCl storage tank vent or HCl transfer operation vent subject to this subpart.

(4) A HCl wastewater operation vent subject to this subpart.

(5) A point of discharge from a relief valve.

(6) A point of discharge from an analyzer.

*HCl production facility* is defined in § 63.8985(a)(1).

*HCl production unit* means an absorber or other vessel in which a liquid HCl product is manufactured by absorbing gaseous HCl into either water or an aqueous HCl solution.

*HCl storage tank* means a tank or other vessel that is used to store liquid HCl product. Tanks or vessels permanently attached to motor vehicles (such as trucks, railcars, barges, or ships) are not HCl storage tanks.

*HCl transfer operation* means the loading, into a tank truck, railcar, ship, or barge, of liquid HCl from a transfer (or loading) rack (as defined in this section) for which the predominant use is liquid HCl. The predominant use of a transfer (or loading) rack is the material that is loaded by the transfer (or loading) rack in the greatest amount.

*HCl wastewater operation* means an operation that handles and processes water containing HCl that is discarded from an HCl production facility.

*Plant site* means all contiguous or adjoining property that is under common control, including properties that are separated only by a road or other public right-of-way. Common control includes properties that are owned, leased, or operated by the same entity, parent entity, subsidiary, or any combination thereof.

*Research and development facility* means laboratory and pilot plant operations whose primary purpose is to conduct research and development into new processes and products, where the operations are under close supervision of technically trained personnel, and the operations are not engaged in the manufacture of products for commercial sale, except in a *de minimis* manner.

*Responsible official* means responsible official as defined in 40 CFR 70.2 of this chapter.

*Transfer (or loading) rack* means the collection of loading arms and loading hoses, at a single loading rack, that are used to fill tank trucks, railcars, ships, and/or barges. Transfer rack includes the associated pumps, meters, shutoff valves, relief valves, and other piping and valves.

*Vapor balanced* means connected to a piping system that is designed to collect vapors displaced from tank trucks, rail cars, ships, or barges during loading, and to route the collected vapors to the storage vessel from which the liquid being loaded originated, or to another storage vessel connected by a common header.

*Vent* means the point of discharge to the atmosphere or to a control device from either an HCl process vent, an HCl storage tank, or an HCl transfer operation.

*Water scrubber control device* means any add-on device that mixes an aqueous stream not containing a caustic substance with the exhaust gases from an HCl process vent, HCl storage tank, or HCl transfer operation to control emissions of HCl and/or $Cl_2$.

[68 FR 19090, Apr. 17, 2003, as amended at 71 FR 17746, Apr. 7, 2006]

TABLE 1 TO SUBPART NNNNN OF PART 63—EMISSION LIMITS AND WORK PRACTICE STANDARDS

As stated in §63.9000(a), you must comply with the following emission limits and work practice standards for each emission stream that is part of an affected source.

| For each . . . | You must meet the following emission limit and work practice standard |
|---|---|
| 1. Emission stream from an HCl process vent at an existing source. | a. Reduce HCl emissions by 99 percent or greater or achieve an outlet concentration of 20 ppm by volume or less; and<br>b. Reduce $Cl_2$ emissions by 99 percent or greater or achieve an outlet concentration of 100 ppm by volume or less. |
| 2. Emission stream from an HCl storage tank at an existing source. | Reduce HCl emissions by 99 percent or greater or achieve an outlet concentration of 120 ppm by volume or less. |
| 3. Emission stream from an HCl transfer operation at an existing source. | Reduce HCl emissions by 99 percent or greater or achieve an outlet concentration of 120 ppm by volume or less. |
| 4. Emission stream from leaking equipment in HCl service at existing and new sources. | a. Prepare and operate at all times according to an equipment LDAR plan that describes in detail the measures that will be put in place to detect leaks and repair them in a timely fashion; and |

| For each . . . | You must meet the following emission limit and work practice standard |
|---|---|
| | b. Submit the plan to the Administrator for comment only with your Notification of Compliance Status; and<br>c. You may incorporate by reference in such plan existing manuals that describe the measures in place to control leaking equipment emissions required as part of other federally enforceable requirements, provided that all manuals that are incorporated by reference are submitted to the Administrator. |
| 5. Emission stream from an HCl process vent at a new source | a. Reduce HCl emissions by 99.4 percent or greater or achieve an outlet concentration of 12 ppm by volume or less; and<br>b. Reduce $Cl_2$ emissions by 99.8 percent or greater or achieve an outlet concentration of 20 ppm by volume or less. |
| 6. Emission stream from an HCl storage tank at a new source .. | Reduce HCl emissions by 99.9 percent or greater or achieve an outlet concentration of 12 ppm by volume or less. |
| 7. Emission stream from an HCl transfer operation at a new source. | Reduce HCl emissions by 99 percent or greater or achieve an outlet concentration of 120 ppm by volume or less. |

[68 FR 19090, Apr. 17, 2003, as amended at 71 FR 17746, Apr. 7, 2006; 85 FR 20870, Apr. 15, 2020]

## Table 2 to Subpart NNNNN of Part 63—Operating Limits

As stated in §63.9000(b), you must comply with the following operating limits for each emission stream that is part of an affected source that is vented to a control device.

| For each . . . | You must . . . |
|---|---|
| 1. Caustic scrubber or water scrubber/absorber ..... | a. Maintain the daily average scrubber inlet liquid or recirculating liquid flow rate, as appropriate, above the operating limit; and<br>b. Maintain the daily average scrubber effluent pH within the operating limits; or<br>c. Instead of a. and b., maintain your operating parameter(s) within the operating limits established according to your monitoring plan established under §63.8(f). |
| 2. Other type of control device to which HCl emissions are ducted. | Maintain your operating parameter(s) within the limits established during the performance test and according to your monitoring plan. |

## Table 3 to Subpart NNNNN of Part 63—Performance Test Requirements for HCl Production Affected Sources

As stated in §63.9020, you must comply with the following requirements for performance tests for HCl production for each affected source.

| For each HCl process vent and each HCl storage tank and HCl transfer operation for which you are conducting a performance test, you must . . . | Using . . . | Additional Information . . . |
|---|---|---|
| 1. Select sampling port location(s) and the number of traverse points. | a. Method 1 or 1A in appendix A to 40 CFR part 60 of this chapter. | i. If complying with a percent reduction emission limitation, sampling sites must located at the inlet and outlet of the control device prior to any releases to the atmosphere (or, if a series of control devices are used, at the inlet of the first control device and at the outlet of the final control device prior to any releases to the atmosphere); or<br>ii. If complying with an outlet concentration emission limitation, the sampling site must be located at the outlet of the final control device and prior to any releases to the atmosphere or, if no control device is used, prior to any releases to the atmosphere. |
| 2. Determine velocity and volumetric flow rate ..... | Method 2, 2A, 2C, 2D, 2F, or 2G in appendix A to 40 CFR part 60 of this chapter. | |
| 3. Determine gas molecular weight ..... | a. Not applicable ..... | i. Assume a molecular weight of 29 (after moisture correction) for calculation purposes. |

| For each HCl process vent and each HCl storage tank and HCl transfer operation for which you are conducting a performance test, you must . . . | Using . . . | Additional Information . . . |
|---|---|---|
| 4. Measure moisture content of the stack gas ..... | Method 4 in appendix A to 40 CFR part 60 of this chapter. | |
| 5. Measure HCl concentration and $Cl_2$ concentration from HCl process vents. | a. Method 26A in appendix A to 40 CFR part 60 of this chapter. | i. An owner or operator may be exempted from measuring the $Cl_2$ concentration from an HCl process vent provided that a demonstration that $Cl_2$ is not likely to be present in the stream is submitted as part of the site-specific test plan required by § 63.9020(a)(2). This demonstration may be based on process knowledge, engineering judgment, or previous test results. |
| 6. Establish operating limits with which you will demonstrate continuous compliance with the emission limits in Table 1 to this subpart, in accordance with § 63.9020(e)(1) or (2). | | |

[68 FR 19090, Apr. 17, 2003, as amended at 71 FR 17747, Apr. 7, 2006]

## Table 4 to Subpart NNNNN of Part 63—Initial Compliance With Emission Limitations and Work Practice Standards

As stated in § 63.9030, you must comply with the following requirements to demonstrate initial compliance with the applicable emission limits for each affected source vented to a control device and each work practice standard.

| For each . . . | For the following emission limit or work practice standard . . . | You have demonstrated initial compliance if . . . |
|---|---|---|
| 1. HCl process vent and each HCl storage tank and HCl transfer operation for which you are conducting a performance test. | a. In Table 1 to this subpart ..... | i. The average percent reduction of HCl and $Cl_2$ (if applicable), measured over the period of the performance test conducted according to Table 3 of this subpart and determined in accordance with § 63.9020(b), is greater than or equal to the applicable percent reduction emission limitation specified in Table 1 of this subpart; or<br>ii. The average HCl and $Cl_2$ (if applicable) concentration, measured over the period of the performance test conducted according to Table 3 of this subpart, is less than or equal to the applicable concentration emission limitation specified in Table 1 of this subpart. |
| 2. HCl storage tank and HCl transfer operation for which you are preparing a design evaluation in lieu of conducting a performance test. | a. In Table 1 to this subpart ..... | i. The percent reduction of HCl, demonstrated by a design evaluation prepared in accordance with § 63.9020(c), is greater than or equal to the applicable percent reduction emission limitation specified in Table 1 of this subpart; or<br>ii. The HCl concentration, demonstrated by a design evaluation prepared in accordance with § 63.9020(c), is less than or equal to the applicable concentration emission limitation specified in Table 1 of this subpart. |
| 3. Leaking equipment ..... | a. In Table 1 to this subpart ..... | i. You certify in your Notification of Compliance Status that you have developed and implemented your LDAR plan and submitted it to the Administrator **for comment only.** |

TABLE 5 TO SUBPART NNNNN OF PART 63—CONTINUOUS COMPLIANCE WITH EMISSION LIMITATIONS AND WORK PRACTICE STANDARDS

As stated in § 63.9040, you must comply with the following requirements to demonstrate continuous compliance with the applicable emission limitations for each affected source vented to a control device and each work practice standard.

| For each . . . | For the following emission limitation and work practice standard . . . | You must demonstrate continuous compliance by . . . |
|---|---|---|
| 1. Affected source using a caustic scrubber or water scrubber/adsorber. | a. In Tables 1 and 2 to this subpart. | i. Collecting the scrubber inlet liquid or recirculating liquid flow rate, as appropriate, and effluent pH monitoring data according to § 63.9025, consistent with your monitoring plan; and<br>ii. Reducing the data to 1-hour and daily block averages according to the requirements in § 63.9025; and<br>iii. Maintaining the daily average scrubber inlet liquid or recirculating liquid flow rate, as appropriate, above the operating limit; and<br>iv. Maintaining the daily average scrubber effluent pH within the operating limits. |
| 2. Affected source using any other control device | a. In Tables 1 and 2 to this subpart. | i. Conducting monitoring according to your monitoring plan established under § 63.8(f) in accordance with § 63.9025(c); and<br>ii. Collecting the parameter data according to your monitoring plan established under § 63.8(f); and<br>iii. Reducing the data to 1-hour and daily block averages according to the requirements in § 63.9025; and<br>iv. Maintaining the daily average parameter values within the operating limits established according to your monitoring plan established under § 63.8(f). |
| 3. Affected source using no control device ..... | a. In Tables 1 and 2 to this subpart.. | i. Verifying that you have not made any process changes that could reasonably be expected to change the outlet concentration since your most recent performance test for an emission point. |
| 4. Leaking equipment affected source ..... | a. In Table 1 to this subpart. | i. Verifying that you continue to use a LDAR plan; and<br>ii. Reporting any instances where you deviated from the plan and the corrective actions taken. |

[68 FR 19090, Apr. 17, 2003, as amended at 71 FR 17747, Apr. 7, 2006]

TABLE 6 TO SUBPART NNNNN OF PART 63—REQUIREMENTS FOR REPORTS

As stated in § 63.9050(a), you must submit a compliance report that includes the information in § 63.9050(c) through (e) as well as the information in the following table. For existing sources and for new or reconstructed sources which commenced construction or reconstruction after April 17, 2003, but before February 5, 2019, before October 13, 2020, you must also submit startup, shutdown, and malfunction reports according to the requirements in § 63.9050(f) and the following table. A startup, shutdown, and malfunction plan is not required after October 13, 2020.

TABLE 6 TO SUBPART NNNNN OF PART 63—REQUIREMENTS FOR REPORTS

| If . . . | Then you must submit a report or statement that: |
|---|---|
| 1. There are no deviations from any emission limitations that apply to you. | There were no deviations from any emission limitations that apply to you during the reporting period. Include this statement in the compliance report. |
| 2. There were no periods during which the operating parameter monitoring systems were out-of-control in accordance with the monitoring plan. | There were no periods during which the CMS were out-of-control during the reporting period. Include this statement in the compliance report. |
| 3. There was a deviation from any emission limitation during the reporting period. | Contains the information in § 63.9050(d). Include this statement in the compliance report. |

TABLE 6 TO SUBPART NNNNN OF PART 63—REQUIREMENTS FOR REPORTS—Continued

| If . . . | Then you must submit a report or statement that: |
|---|---|
| 4. There were periods during which the operating parameter monitoring systems were out-of-control in accordance with the monitoring plan. | Contains the information in § 63.9050(d). Include this statement in the compliance report. |
| 5. There was a startup, shutdown, and malfunction during the reporting period that is not consistent with your startup, shutdown, and malfunction plan. | For existing sources and for new or reconstructed sources which commenced construction or reconstruction after April 17, 2003, but before February 5, 2019, before October 13, 2020, contains the information in § 63.9050(f). Include this statement in the compliance report. A startup, shutdown, and malfunction plan is not required after October 13, 2020. |
| 6. There were periods when the procedures in the LDAR plan were not followed. | Contains the information in § 63.9050(c)(7). Include this statement in the compliance report. |

[85 FR 20870, Apr. 15, 2020]

TABLE 7 TO SUBPART NNNNN OF PART 63—APPLICABILITY OF GENERAL PROVISIONS TO SUBPART NNNNN

As stated in § 63.9065, you must comply with the applicable General Provisions requirements according to the following:

| Citation | Requirement | Applies to subpart NNNNN | Explanation |
|---|---|---|---|
| § 63.1 | Initial applicability determination; applicability after standard established; permit requirements; extensions; notifications. | Yes. | |
| § 63.2 | Definitions | Yes | Additional definitions are found in § 63.9075. |
| § 63.3 | Units and abbreviations | Yes. | |
| § 63.4 | Prohibited activities; compliance date; circumvention, severability. | Yes. | |
| § 63.5 | Construction/reconstruction applicability; applications; approvals. | Yes. | |
| § 63.6(a) | Compliance with standards and maintenance requirements-applicability. | Yes. | |
| § 63.6(b)(1)–(4) | Compliance dates for new or reconstructed sources | Yes | § 63.8995 specifies compliance dates. |
| § 63.6(b)(5) | Notification if commenced construction or reconstruction after proposal. | Yes. | |
| § 63.6(b)(6) | [Reserved] | Yes. | |
| § 63.6(b)(7) | Compliance dates for new or reconstructed area sources that become major. | Yes | § 63.8995 specifies compliance dates. |
| § 63.6(c)(1)–(2) | Compliance dates for existing sources | Yes | § 63.8995 specifies compliance dates. |
| § 63.6(c)(3)–(4) | [Reserved] | Yes. | |
| § 63.6(c)(5) | Compliance dates for existing area sources that become major. | Yes | § 63.8995 specifies compliance dates. |
| § 63.6(d) | [Reserved] | Yes. | |
| § 63.6(e)(1)(i) | General Duty to minimize emissions | No, for new or reconstructed sources which commenced construction or reconstruction after February 4, 2019. Yes, for all other affected sources before October 13, 2020, and No thereafter. | Subpart NNNNN requires affected units to meet emissions standards at all times. See § 63.9005(b) for general duty requirement. |

| Citation | Requirement | Applies to subpart NNNNN | Explanation |
|---|---|---|---|
| § 63.6(e)(1)(ii) | Requirement to correct malfunctions ASAP | No, for new or reconstructed sources which commenced construction or reconstruction after February 4, 2019. Yes, for all other affected sources before October 13, 2020, and No thereafter. | |
| § 63.6(e)(1)(iii)–(e)(2). | Operation and maintenance requirements | Yes. | |
| § 63.6(e)(3) | Startup, Shutdown, and Malfunction Plans | No, for new or reconstructed sources which commenced construction or reconstruction after February 4, 2019. Yes, for all other affected sources before October 13, 2020, and No thereafter. | |
| § 63.6(f)(1) | Compliance except during startup, shutdown, and malfunction. | No, for new or reconstructed sources which commenced construction or reconstruction after February 4, 2019. Yes, for all other affected sources before October 13, 2020, and No thereafter. | |
| § 63.6(f)(2)–(3) | Methods for determining compliance | Yes. | |
| § 63.6(g) | Use of an alternative non-opacity emission standard | Yes. | |
| § 63.6(h) | Compliance with opacity/visible emission standards | No | Subpart NNNNN does not specify opacity or visible emission standards. |
| § 63.6(i) | Extension of compliance with emission standards | Yes. | |
| § 63.6(j) | Presidential compliance exemption | Yes. | |
| § 63.7(a)(1)–(2) | Performance test dates | Yes | Except for existing affected sources as specified in § 63.9010(b). |
| § 63.7(a)(3) | Administrator's Clean Air Act section 114 authority to require a performance test. | Yes. | |
| § 63.7(b) | Notification of performance test and rescheduling | Yes. | |
| § 63.7(c) | Quality assurance program and site-specific test plans | Yes. | |

| Citation | Requirement | Applies to subpart NNNNN | Explanation |
|---|---|---|---|
| § 63.7(d) | Performance testing facilities | Yes. | |
| § 63.7(e)(1) | Conditions for conducting performance tests | No, for new or reconstructed sources which commenced construction or reconstruction after February 4, 2019. Yes, for all other affected sources before October 13, 2020, and No thereafter. | See § 63.9020(a) for performance testing requirements. |
| § 63.7(f) | Use of an alternative test method | Yes. | |
| § 63.7(g) | Performance test data analysis, recordkeeping, and reporting. | Yes. | |
| § 63.7(h) | Waiver of performance tests | Yes. | |
| § 63.8(a)(1)–(3) | Applicability of monitoring requirements | Yes | Additional monitoring requirements are found in § 63.9005(d) and 63.9035. |
| 63.8(a)(4) | Monitoring with flares | No | Subpart NNNNN does not refer directly or indirectly to § 63.11. |
| § 63.8(b) | Conduct of monitoring and procedures when there are multiple effluents and multiple monitoring systems. | Yes. | |
| § 63.8(c)(1)(i) | General duty to minimize emissions and CMS operation | No, for new or reconstructed sources which commenced construction or reconstruction after February 4, 2019. Yes, for all other affected sources before October 13, 2020, and No thereafter. | |
| § 63.8(c)(1)(ii) | Continuous monitoring system O&M | Yes | Applies as modified by § 63.9005(d). |
| § 63.8(c)(1)(iii) | Requirement to develop Startup, Shutdown, and Malfunction Plan for CMS. | No, for new or reconstructed sources which commenced construction or reconstruction after February 4, 2019. Yes, for all other affected sources before October 13, 2020, and No thereafter. | |

| Citation | Requirement | Applies to subpart NNNNN | Explanation |
|---|---|---|---|
| § 63.8(c)(2)–(3) | Continuous monitoring system O&M | Yes | Applies as modified by § 63.9005(d) |
| § 63.8(c)(4) | Continuous monitoring system requirements during breakdown, out-of-control, repair, maintenance, and high-level calibration drifts. | Yes | Applies as modified by § 63.9005(d). |
| § 63.8(c)(5) | Continuous opacity monitoring system (COMS) minimum procedures. | No | Subpart NNNNN does not have opacity or visible emission standards. |
| § 63.8(c)(6) | Zero and high level calibration checks | Yes | Applies as modified by § 63.9005(d). |
| § 63.8(c)(7)–(8) | Out-of-control periods, including reporting | Yes. | |
| § 63.8(d)(1)–(2) | Quality control program and CMS performance evaluation | Yes | Applies as modified by § 63.9005(d). |
| § 63.8(d)(3) | Written procedures for CMS | No, for new or reconstructed sources which commenced construction or reconstruction after February 4, 2019. Yes, for all other affected sources before October 13, 2020, and No thereafter. | See § 63.9005(d)(5) for written procedures for CMS. |
| § 63.8(e) | Performance evaluation of CMS | Yes | Applies as modified by § 63.9005(d). |
| § 63.8(f)(1)–(5) | Use of an alternative monitoring method | Yes. | |
| § 63.8(f)(6) | Alternative to relative accuracy test | No | Only applies to sources that use continuous emissions monitoring systems (CEMS). |
| § 63.8(g) | Data reduction | Yes | Applies as modified by § 63.9005(d). |
| § 63.9(a) | Notification requirements—applicability | Yes. | |
| § 63.9(b) | Initial notifications | Yes | Except § 63.9045(c) requires new or reconstructed affected sources to submit the application for construction or reconstruction required by § 63.9(b)(1)(iii) in lieu of the initial notification. |
| § 63.9(c) | Request for compliance extension | Yes. | |
| § 63.9(d) | Notification that a new source is subject to special compliance requirements. | Yes. | |
| § 63.9(e) | Notification of performance test | Yes. | |
| § 63.9(f) | Notification of visible emissions/opacity test | No | Subpart NNNNN does not have opacity or visible emission standards. |
| § 63.9(g)(1) | Additional CMS notifications—date of CMS performance evaluation. | Yes. | |
| § 63.9(g)(2) | Use of COMS data | No | Subpart NNNNN does not require the use of COMS. |
| § 63.9(g)(3) | Alternative to relative accuracy testing | No | Applies only to sources with CEMS. |
| § 63.9(h) | Notification of compliance status | Yes | Except the submission date specified in § 63.9(h)(2)(ii) is superseded by the date specified in § 63.9045(f). |
| § 63.9(i) | Adjustment of submittal deadlines | Yes. | |
| § 63.9(j) | Change in previous information | Yes. | |
| § 63.9(k) | Electronic reporting procedures | Yes | Only as specified in § 63.9(j). |
| § 63.10(a) | Recordkeeping/reporting applicability | Yes. | |

| Citation | Requirement | Applies to subpart NNNNN | Explanation |
|---|---|---|---|
| § 63.10(b)(1) | General recordkeeping requirements | Yes | §§ 63.9055 and 63.9060 specify additional recordkeeping requirements. |
| § 63.10(b)(2)(i)–(ii) | Records related to startup, shutdown, and malfunction periods. | No, for new or reconstructed sources which commenced construction or reconstruction after February 4, 2019. Yes, for all other affected sources before October 13, 2020, and No thereafter. | See 63.9055 for recordkeeping of (1) date, time and duration; (2) listing of affected source or equipment, and an estimate of the quantity of each regulated pollutant emitted over the standard; and (3) actions to minimize emissions and correct the failure. |
| § 63.10(b)(2)(iii) | Maintenance Records | Yes. | |
| § 63.10(b)(2)(iv) | Actions taken to minimize emissions during startup, shutdown, and malfunction. | No, for new or reconstructed sources which commenced construction or reconstruction after February 4, 2019. Yes, for all other affected sources before October 13, 2020, and No thereafter. | |
| § 63.10(b)(2)(v) | Actions taken to minimize emissions during startup, shutdown, and malfunction. | No, for new or reconstructed sources which commenced construction or reconstruction after February 4, 2019. Yes, for all other affected sources before October 13, 2020, and No thereafter. | |
| § 63.10(b)(2)(vi) | Recordkeeping for CMS malfunctions | Yes. | |
| § 63.10(b)(2)(vii)–(xi). | Records for performance tests and CMS | Yes. | |
| § 63.10(b)(2)(xii) | Records when under waiver | Yes. | |
| § 63.10(b)(2)(xiii) | Records when using alternative to relative accuracy test | No | Applies only to sources with CEMS. |
| § 63.10(b)(2)(xiv) | All documentation supporting initial notification and notification of compliance status. | Yes. | |
| § 63.10(b)(3) | Recordkeeping requirements for applicability determinations. | Yes. | |
| § 63.10(c)(1)–(14) | Additional recordkeeping requirements for sources with CMS. | Yes | Applies as modified by § 63.9005 (d). |

| Citation | Requirement | Applies to subpart NNNNN | Explanation |
|---|---|---|---|
| § 63.10(c)(15) | Use of Startup, Shutdown, and Malfunction Plan | No, for new or reconstructed sources which commenced construction or reconstruction after February 4, 2019. Yes, for all other affected sources before October 13, 2020, and No thereafter. | |
| § 63.10(d)(1) | General reporting requirements | Yes | § 63.9050 specifies additional reporting requirements. |
| § 63.10(d)(2) | Performance test results | Yes | § 63.9045(f) specifies submission date. |
| § 63.10(d)(3) | Opacity or visible emissions observations | No | Subpart NNNNN does not specify opacity or visible emission standards. |
| § 63.10(d)(4) | Progress reports for sources with compliance extensions | Yes. | |
| § 63.10(d)(5) | Startup, shutdown, and malfunction reports | No, for new or reconstructed sources which commenced construction or reconstruction after February 4, 2019. Yes, for all other affected sources before October 13, 2020, and No thereafter. | See § 63.9050(c)(5) for malfunction reporting requirements. |
| § 63.10(e)(1) | Additional CMS reports—general | Yes | Applies as modified by § 63.9005(d). |
| § 63.10(e)(2)(i) | Results of CMS performance evaluations | Yes | Applies as modified by § 63.9005(d). |
| § 63.10(e)(2) | Results of COMS performance evaluations | No | Subpart NNNNN does not require the use of COMS. |
| § 63.10(e)(3) | Excess emissions/CMS performance reports | Yes. | |
| § 63.10(e)(4) | Continuous opacity monitoring system data reports | No | Subpart NNNNN does not require the use of COMS. |
| § 63.10(f) | Recordkeeping/reporting waiver | Yes. | |
| § 63.11 | Control device requirements—applicability | No | Facilities subject to subpart NNNNN do not use flares as control devices. |
| § 63.12 | State authority and delegations | Yes | § 63.9070 lists those sections of subparts NNNNN and A that are not delegated. |
| § 63.13 | Addresses | Yes. | |
| § 63.14 | Incorporation by reference | Yes | Subpart NNNNN does not incorporate any material by reference. |
| § 63.15 | Availability of information/confidentiality | Yes. | |

[68 FR 19090, Apr. 17, 2003, as amended at 71 FR 17748, Apr. 7, 2006; 85 FR 20871, Apr. 15, 2020; 85 FR 73916, Nov. 19, 2020]

## Subpart OOOOO [Reserved]

## Subpart PPPPP—National Emission Standards for Hazardous Air Pollutants for Engine Test Cells/Stands

SOURCE: 68 FR 28785, May 27, 2003, unless otherwise noted.

WHAT THIS SUBPART COVERS

### § 63.9280 What is the purpose of subpart PPPPP?

This subpart PPPPP establishes national emission standards for hazardous air pollutants (NESHAP) for engine test cells/stands located at major sources of hazardous air pollutants (HAP) emissions. This subpart also establishes requirements to demonstrate initial and continuous compliance with the emission limitations contained in this NESHAP.

### § 63.9285 Am I subject to this subpart?

You are subject to this subpart if you own or operate an engine test cell/stand that is located at a major source of HAP emissions.

(a) An engine test cell/stand is any apparatus used for testing uninstalled stationary or uninstalled mobile (motive) engines.

(b) An uninstalled engine is an engine that is not installed in, or an integrated part of, the final product.

(c) A major source of HAP emissions is a plant site that emits or has the potential to emit any single HAP at a rate of 10 tons (9.07 megagrams) or more per year or any combination of HAP at a rate of 25 tons (22.68 megagrams) or more per year.

### § 63.9290 What parts of my plant does this subpart cover?

This subpart applies to each new, reconstructed, or existing affected source.

(a) *Affected source.* An affected source is the collection of all equipment and activities associated with engine test cells/stands used for testing uninstalled stationary or uninstalled mobile (motive) engines located at a major source of HAP emissions.

(1) *Existing affected source.* An affected source is existing if you commenced construction or reconstruction of the affected source on or before May 14, 2002. A change in ownership of an existing affected source does not make that affected source a new or reconstructed affected source.

(2) *New affected source.* An affected source is new if you commenced construction of the affected source after May 14, 2002.

(3) *Reconstructed affected source.* An affected source is reconstructed if you meet the definition of reconstruction in § 63.2 of subpart A of this part and reconstruction is commenced after May 14, 2002. Changes made to an existing affected source primarily for the purpose of complying with revisions to engine testing requirements under 40 CFR parts 80, 86, 89, 90, 91, or 92 are not considered a modification or reconstruction. In addition, passive measurement and control instrumentation and electronics are not included as part of any affected source reconstruction evaluation.

(b) Existing affected sources do not have to meet the requirements of this subpart and of subpart A of this part.

(c) Any portion of a new or reconstructed affected source located at a major source that is used exclusively for testing internal combustion engines with rated power of less than 25 horsepower (hp) (19 kilowatts(kW)) does not have to meet the requirements of this subpart and of subpart A of this part except for the initial notification requirements of § 63.9345(b).

(d) Any portion of a new or reconstructed affected source located at a major source that meets any of the criteria specified in paragraphs (d)(1) through (4) of this section does not have to meet the requirements of this subpart and of subpart A of this part.

(1) Any portion of the affected source used exclusively for testing combustion turbine engines.

(2) Any portion of the affected source used exclusively for testing rocket engines.

(3) Any portion of the affected source used in research and teaching activities at facilities that are not engaged

in the development of engines or engine test services for commercial purposes.

(4) Any portion of the affected source operated to test or evaluate fuels (such as knock engines), transmissions, or electronics.

### § 63.9295 When do I have to comply with this subpart?

(a) *Affected sources.* (1) If you start up your new or reconstructed affected source before May 27, 2003, you must comply with the emission limitations in this subpart no later than May 27, 2003; except that the compliance date for the requirements promulgated at §§ 63.9295, 63.9305, 63.9340, 63.9350, 63.9355, 63.9375, and Table 7 of 40 CFR part 63, subpart PPPPP, revised on June 3, 2020 is December 1, 2020.

(2) If you start up your new or reconstructed affected source on or after May 27, 2003, you must comply with the emission limitations in this subpart upon startup; except that if the initial startup of your new or reconstructed affected source occurs after May 27, 2003, but on or before May 8, 2019, the compliance date for the requirements promulgated at §§ 63.9295, 63.9305, 63.9340, 63.9350, 63.9355, 63.9375, and Table 7 of this subpart as revised on June 3, 2020 is December 1, 2020.

(3) If the initial startup of your new or reconstructed affected source occurs after May 8, 2019, the compliance date is June 3, 2020 or the date of startup, whichever is later.

(b) *Area sources that become major sources.* If your new or reconstructed affected source is located at an area source that increases its emissions or its potential to emit such that it becomes a major source of HAP, your new or reconstructed affected source must be in compliance with this subpart when the area source becomes a major source.

(c) You must meet the notification requirements in § 63.9345 and in 40 CFR part 63, subpart A.

[68 FR 28785, May 27, 2003, as amended at 85 FR 34345, June 3, 2020]

EMISSION LIMITATIONS

### § 63.9300 What emission limitations must I meet?

For each new or reconstructed affected source that is used in whole or in part for testing internal combustion engines with rated power of 25 hp (19 kW) or more and that is located at a major source, you must comply with the emission limitations in Table 1 to this subpart. (Tables are found at the end of this subpart.)

### § 63.9301 What are my options for meeting the emission limits?

You may use either a continuous parameter monitoring system (CPMS) or a continuous emission monitoring system (CEMS) to demonstrate compliance with the emission limitations. Continuous monitoring systems must meet the requirements in § 63.9306 (CPMS) and § 63.9307 (CEMS).

### § 63.9302 What operating limits must I meet?

(a) For any new or reconstructed affected source on which you use add-on controls, you must meet the operating limits specified in Table 2 to this subpart. These operating limits must be established during the performance test according to the requirements in § 63.9324. You must meet the operating limits at all times after you establish them.

(b) If you use an add-on control device other than those listed in Table 2 to this subpart, or wish to monitor an alternative parameter and comply with a different operating limit, you must apply to the Administrator for approval of alternative monitoring under § 63.8(f).

GENERAL COMPLIANE REQUIREMENTS

### § 63.9305 What are my general requirements for complying with this subpart?

(a) Prior to December 1, 2020, you must be in compliance with the emission limitation that applies to you at all times, except during periods of startup, shutdown, or malfunction (SSM) of your control device or associated monitoring equipment. On and after December 1, 2020, you must be in

compliance with the applicable emission limitation at all times.

(b) If you must comply with the emission limitation, you must operate and maintain your engine test cell/stand, air pollution control equipment, and monitoring equipment in a manner consistent with safety and good air pollution control practices for minimizing emissions at all times. The general duty to minimize emissions does not require the owner or operator to make any further efforts to reduce emissions if levels required by the applicable standard have been achieved. Determination of whether a source is operating in compliance with operation and maintenance requirements will be based on information available to the Administrator that may include, but is not limited to, monitoring results, review of operation and maintenance procedures, review of operation and maintenance records, and inspection of the affected source.

(c) For affected sources prior to December 1, 2020, you must develop a written SSM plan (SSMP) for emission control devices and associated monitoring equipment according to the provisions in § 63.6(e)(3). The plan will apply only to emission control devices, and not to engine test cells/stands.

[85 FR 34345, June 3, 2020]

### § 63.9306 What are my continuous parameter monitoring system (CPMS) installation, operation, and maintenance requirements?

(a) *General*. You must install, operate, and maintain each CPMS specified in paragraphs (c) and (d) of this section according to paragraphs (a)(1) through (7) of this section. You must install, operate, and maintain each CPMS specified in paragraph (b) of this section according to paragraphs (a)(3) through (5) of this section.

(1) The CPMS must complete a minimum of one cycle of operation for each successive 15-minute period. You must have a minimum of four equally spaced successive cycles of CPMS operation in 1 hour.

(2) You must determine the average of all recorded readings for each successive 3-hour period of the emission capture system and add-on control device operation.

(3) You must record the results of each inspection, calibration, and validation check of the CPMS.

(4) You must maintain the CPMS at all times and have available necessary parts for routine repairs of the monitoring equipment.

(5) You must operate the CPMS and collect emission capture system and add-on control device parameter data at all times that an engine test cell/stand is operating, except during monitoring malfunctions, associated repairs, and required quality assurance or control activities (including, if applicable, calibration checks and required zero and span adjustments).

(6) You must not use emission capture system or add-on control device parameter data recorded during monitoring malfunctions, associated repairs, out-of-control periods, or required quality assurance or control activities when calculating data averages. You must use all the data collected during all other periods in calculating the data averages for determining compliance with the emission capture system and add-on control device operating limits.

(7) A monitoring malfunction is any sudden, infrequent, not reasonably preventable failure of the CPMS to provide valid data. Monitoring failures that are caused in part by poor maintenance or careless operation are not malfunctions. Any period for which the monitoring system is out-of-control and data are not available for required calculations is a deviation from the monitoring requirements.

(b) *Capture system bypass line*. You must meet the requirements of paragraphs (b)(1) and (2) of this section for each emission capture system that contains bypass lines that could divert emissions away from the add-on control device to the atmosphere.

(1) You must monitor or secure the valve or closure mechanism controlling the bypass line in a nondiverting position in such a way that the valve or closure mechanism cannot be opened without creating a record that the valve was opened. The method used to monitor or secure the valve or closure mechanism must meet one of the requirements specified in paragraphs (b)(1)(i) through (iv) of this section.

(i) *Flow control position indicator*. Install, calibrate, maintain, and operate according to the manufacturer's specifications a flow control position indicator that takes a reading at least once every 15 minutes and provides a record indicating whether the emissions are directed to the add-on control device or diverted from the add-on control device. The time of occurrence and flow control position must be recorded, as well as every time the flow direction is changed. The flow control position indicator must be installed at the entrance to any bypass line that could divert the emissions away from the add-on control device to the atmosphere.

(ii) *Car-seal or lock-and-key valve closures*. Secure any bypass line valve in the closed position with a car-seal or a lock-and-key type configuration. You must visually inspect the seal or closure mechanism at least once every month to ensure that the valve is maintained in the closed position, and the emissions are not diverted away from the add-on control device to the atmosphere.

(iii) *Valve closure monitoring*. Ensure that any bypass line valve is in the closed (nondiverting) position through monitoring of valve position at least once every 15 minutes. You must inspect the monitoring system at least once every month to verify that the monitor will indicate valve position.

(iv) *Automatic shutdown system*. Use an automatic shutdown system in which the engine testing operation is stopped when flow is diverted by the bypass line away from the add-on control device to the atmosphere when an engine test cell/stand is operating. You must inspect the automatic shutdown system at least once every month to verify that it will detect diversions of flow and shut down the engine test cell/stand in operation.

(2) If any bypass line is opened, you must include a description of why the bypass line was opened and the length of time it remained open in the semiannual compliance reports required in § 63.9350.

(c) *Thermal oxidizers and catalytic oxidizers*. If you are using a thermal oxidizer or catalytic oxidizer as an add-on control device, you must comply with the requirements in paragraphs (c)(1) through (3) of this section.

(1) For a thermal oxidizer, install a gas temperature monitor in the firebox of the thermal oxidizer or in the duct immediately downstream of the firebox before any substantial heat exchange occurs.

(2) For a catalytic oxidizer, you must install a gas temperature monitor in the gas stream immediately before the catalyst bed, and if you established operating limits according to § 63.9324(b)(1) and (2), also install a gas temperature monitor in the gas stream immediately after the catalyst bed.

(i) If you establish operating limits according to § 63.9324(b)(1) and (2), then you must install the gas temperature monitors both upstream and downstream of the catalyst bed. The temperature monitors must be in the gas stream immediately before and after the catalyst bed to measure the temperature difference across the bed.

(ii) If you establish operating limits according to § 63.9324(b)(3) and (4), then you must install a gas temperature monitor upstream of the catalyst bed. The temperature monitor must be in the gas stream immediately before the catalyst bed to measure the temperature.

(3) For all thermal oxidizers and catalytic oxidizers, you must meet the requirements in paragraphs (a) and (c)(3)(i) through (vii) of this section for each gas temperature monitoring device.

(i) Locate the temperature sensor in a position that provides a representative temperature.

(ii) Use a temperature sensor with a measurement sensitivity of 4 degrees Fahrenheit or 0.75 percent of the temperature value, whichever is larger.

(iii) Shield the temperature sensor system from electromagnetic interference and chemical contaminants.

(iv) If a gas temperature chart recorder is used, it must have a measurement sensitivity in the minor division of at least 20 degrees Fahrenheit.

(v) Perform an electronic calibration at least semiannually according to the procedures in the manufacturer's owner's manual. Following the electronic calibration, you must conduct a temperature sensor validation check in

which a second or redundant temperature sensor placed near the process temperature sensor must yield a reading within 30 degrees Fahrenheit of the process temperature sensor reading.

(vi) Conduct calibration and validation checks anytime the sensor exceeds the manufacturer's specified maximum operating temperature range or install a new temperature sensor.

(vii) At least monthly, inspect components for integrity and electrical connections for continuity, oxidation, and galvanic corrosion.

(d) Emission capture systems. The capture system monitoring system must comply with the applicable requirements in paragraphs (d)(1) and (2) of this section.

(1) For each flow measurement device, you must meet the requirements in paragraphs (a) and (d)(1)(i) through (iv) of this section.

(i) Locate a flow sensor in a position that provides a representative flow measurement in the duct from each capture device in the emission capture system to the add-on control device.

(ii) Reduce swirling flow or abnormal velocity distributions due to upstream and downstream disturbances.

(iii) Conduct a flow sensor calibration check at least semiannually.

(iv) At least monthly, inspect components for integrity, electrical connections for continuity, and mechanical connections for leakage.

(2) For each pressure drop measurement device, you must comply with the requirements in paragraphs (a) and (d)(2)(i) through (vi) of this section.

(i) Locate the pressure sensor(s) in or as close to a position that provides a representative measurement of the pressure drop across each opening you are monitoring.

(ii) Minimize or eliminate pulsating pressure, vibration, and internal and external corrosion.

(iii) Check pressure tap pluggage daily.

(iv) Using an inclined manometer with a measurement sensitivity of 0.0002 inch water, check gauge calibration quarterly and transducer calibration monthly.

(v) Conduct calibration checks any time the sensor exceeds the manufacturer's specified maximum operating pressure range or install a new pressure sensor.

(vi) At least monthly, inspect components for integrity, electrical connections for continuity, and mechanical connections for leakage.

### § 63.9307 What are my continuous emissions monitoring system installation, operation, and maintenance requirements?

(a) You must install, operate, and maintain each CEMS to monitor carbon monoxide (CO) or total hydrocarbons (THC) and oxygen ($O_2$) at the outlet of the exhaust system of the engine test cell/stand or at the outlet of the emission control device.

(b) To comply with the CO or THC percent reduction emission limitation, you may install, operate, and maintain a CEMS to monitor CO or THC and $O_2$ at both the inlet and the outlet of the emission control device.

(c) To comply with either emission limitations, the CEMS must be installed and operated according to the requirements described in paragraphs (c)(1) through (4) of this section.

(1) You must install, operate, and maintain each CEMS according to the applicable Performance Specification (PS) of 40 CFR part 60, appendix B (PS–3, PS–4A, or PS–8).

(2) You must conduct a performance evaluation of each CEMS according to the requirements in 40 CFR 63.8 and according to PS–3 of 40 CFR part 60, appendix B, using Reference Method 3A or 3B for the $O_2$ CEMS, and according to PS–4A of 40 CFR part 60, appendix B, using Reference Method 10 or 10B for the CO CEMS, and according to PS–8 of CFR part 60, appendix B, using Reference Method 25A for the THC CEMS. If the fuel used in the engines being tested is natural gas, you may use ASTM D 6522–00, Standard Test Method for Determination of Nitrogen Oxides, Carbon Monoxide and Oxygen Concentrations in Emissions from Natural Gas Fired Reciprocating Engines, Combustion Turbines, Boilers, and Process Heaters Using Portable Analyzers (incorporated by reference, see § 63.14). As an alternative to Method 3B, you may use ANSI/ASME PTC 19.10–1981, ''Flue

and Exhaust Gas Analyses [Part 10, Instruments and Apparatus],'' (incorporated by reference, see § 63.14).

(3) As specified in § 63.8(c)(4)(ii), each CEMS must complete a minimum of one cycle of operation (sampling, analyzing, and data recording) for each successive 15-minute period. You must have at least two data points, each representing a different 15-minute period within the same hour, to have a valid hour of data.

(4) All CEMS data must be reduced as specified in § 63.8(g)(2) and recorded as CO or THC as carbon concentration in parts per million by volume, dry basis (ppmvd), corrected to 15 percent $O_2$ content.

(d) If you have CEMS that are subject to paragraph (a) or (b) of this section, you must properly maintain and operate the monitors continuously according to the requirements described in paragraphs (d)(1) and (2) of this section.

(1) *Proper maintenance.* You must maintain the monitoring equipment at all times that the engine test cell/stand is operating, including but not limited to, maintaining necessary parts for routine repairs of the monitoring equipment.

(2) *Continued operation.* You must operate your CEMS according to paragraphs (d)(2)(i) and (ii) of this section.

(i) You must conduct all monitoring in continuous operation at all times that the engine test cell/stand is operating, except for, as applicable, monitoring malfunctions, associated repairs, and required quality assurance or control activities (including, as applicable, calibration drift checks and required zero and high-level adjustments). Quality assurance or control activities must be performed according to procedure 1 of 40 CFR part 60, appendix F.

(ii) Data recorded during monitoring malfunctions, associated repairs, out-of-control periods, and required quality assurance or control activities must not be used for purposes of calculating data averages. You must use all of the data collected from all other periods in assessing compliance. A monitoring malfunction is any sudden, infrequent, not reasonably preventable failure of the monitoring equipment to provide valid data. Monitoring failures that are caused in part by poor maintenance or careless operation are not malfunctions. Any period for which the monitoring system is out-of-control and data are not available for required calculations constitutes a deviation from the monitoring requirements.

[68 FR 28785, May 27, 2003, as amended at 85 FR 34345, June 3, 2020]

TESTING AND INITIAL COMPLIANCE REQUIREMENTS

### § 63.9310 By what date must I conduct the initial compliance demonstrations?

You must conduct the initial compliance demonstrations that apply to you in Table 3 to this subpart within 180 calendar days after the compliance date that is specified for your new or reconstructed affected source in § 63.9295 and according to the provisions in § 63.7(a)(2).

### § 63.9320 What procedures must I use?

(a) You must conduct each initial compliance demonstration that applies to you in Table 3 to this subpart.

(b) You must conduct an initial performance evaluation of each capture and control system according to §§ 63.9321, 63.9322, 63.9323 and 63.9324, and each CEMS according to the requirements in 40 CFR 63.8 and according to the applicable Performance Specification of 40 CFR part 60, appendix B (PS–3, PS–4A, or PS–8).

(c) The initial demonstration of compliance with the carbon monoxide (CO) or THC concentration limitation consists of either the first 4-hour rolling average CO or THC concentration recorded after completion of the CEMS performance evaluation if CEMS are installed or the average of the test run averages during the initial performance test. You must correct the CO or THC concentration at the outlet of the engine test cell/stand or the emission control device to a dry basis and to 15 percent $O_2$ content according to Equation 1 of this section:

$$C_c = C_{unc} \left[\frac{5.9}{(20.9 - \%O2d)}\right]$$

Where:

$C_c$ = concentration of CO or THC, corrected to 15 percent oxygen, ppmvd

$C_{unc}$ = total uncorrected concentration of CO or THC, ppmvd

$\%O_{2d}$ = concentration of oxygen measured in gas stream, dry basis, percent by volume

(d) The initial demonstration of compliance with the CO or THC percent reduction emission limitation consists of the first 4-hour rolling average percent reduction in CO or THC recorded after completion of the performance evaluation of the capture/control system and/or CEMS. You must complete the actions described in paragraphs (d)(1) through (2) of this section.

(1) Correct the CO or THC concentrations at the inlet and outlet of the emission control device to a dry basis and to 15 percent $O_2$ content using Equation 1 of this section.

(2) Calculate the percent reduction in CO or THC using Equation 2 of this section:

$$R = \frac{C_i - C_o}{C_i} \times 100 \qquad \text{(Eq. 2)}$$

Where:

R = percent reduction in CO or THC

$C_i$ = corrected CO or THC concentration at inlet of the emission control device

$C_o$ = corrected CO or THC concentration at the outlet of the emission control device.

[68 FR 28785, May 27, 2003, as amended at 85 FR 34346, June 3, 2020]

### §63.9321 What are the general requirements for performance tests?

(a) You must conduct each performance test required by §63.9310 under the conditions in this section unless you obtain a waiver of the performance test according to the provisions in §63.7(h). Prior to December 1, 2020, the performance test must also be conducted according to the requirements in §63.7(e)(1).

(1) *Representative engine testing conditions.* You must conduct the performance test under representative operating conditions for the test cell/stand. Operations during periods of SSM, and during periods of nonoperation do not constitute representative conditions. You must record the process information that is necessary to document operating conditions during the test and explain why the conditions represent normal operation.

(2) *Representative emission capture system and add-on control device operating conditions.* You must conduct the performance test when the emission capture system and add-on control device are operating at a representative flow rate, and the add-on control device is operating at a representative inlet concentration. You must record information that is necessary to document emission capture system and add-on control device operating conditions during the test and explain why the conditions represent normal operation.

(b) You must conduct each performance test of an emission capture system according to the requirements in §63.9322. You must conduct each performance test of an add-on control device according to the requirements in §63.9323.

[68 FR 28785, May 27, 2003, as amended at 85 FR 34346, June 3, 2020]

### §63.9322 How do I determine the emission capture system efficiency?

You must use the procedures and test methods in this section to determine capture efficiency as part of the performance test required by §63.9310.

(a) *Assuming 100 percent capture efficiency.* You may assume the capture system efficiency is 100 percent if both conditions in paragraphs (a)(1) and (2) of this section are met:

(1) The capture system meets the criteria in Method 204 of appendix M to 40 CFR part 51 for a potential to emit (PTE) and directs all the exhaust gases from the enclosure to an add-on control device.

(2) All engine test operations creating exhaust gases for which the test is applicable are conducted within the capture system.

(b) *Measuring capture efficiency*. If the capture system does not meet the criteria in paragraphs (a)(1) and (2) of this section, then you must use one of the two protocols described in paragraphs (c) and (d) of this section to measure capture efficiency. The capture efficiency measurements use total volatile hydrocarbon (TVH) capture efficiency as a surrogate for organic HAP capture efficiency. For the protocol in paragraph (c) of this section, the capture efficiency measurement must consist of three test runs. Each test run must be at least 3 hours in duration or the length of a production run, whichever is longer, up to 8 hours. For the purposes of this test, a production run means the time required for a single engine test to go from the beginning to the end.

(c) *Gas-to-gas protocol using a temporary total enclosure or a building enclosure*. The gas-to-gas protocol compares the mass of TVH emissions captured by the emission capture system to the mass of TVH emissions not captured. Use a temporary total enclosure or a building enclosure and the procedures in paragraphs (c)(1) through (5) of this section to measure emission capture system efficiency using the gas-to-gas protocol.

(1) Either use a building enclosure or construct an enclosure around the engine test cell/stand and all areas where emissions from the engine testing subsequently occur. The enclosure must meet the applicable definition of a temporary total enclosure or building enclosure in Method 204 of appendix M to 40 CFR part 51.

(2) Use Method 204B or 204C of appendix M to 40 CFR part 51 to measure the total mass, kg, of TVH emissions captured by the emission capture system during each capture efficiency test run as measured at the inlet to the add-on control device. To make the measurement, substitute TVH for each occurrence of the term VOC in the methods.

(i) The sampling points for the Method 204B or 204C of appendix M to 40 CFR part 51 measurement must be upstream from the add-on control device and must represent total emissions routed from the capture system and entering the add-on control device.

(ii) If multiple emission streams from the capture system enter the add-on control device without a single common duct, then the emissions entering the add-on control device must be simultaneously measured in each duct, and the total emissions entering the add-on control device must be determined.

(3) Use Method 204D or 204E of appendix M to 40 CFR part 51 to measure the total mass, kg, of TVH emissions that are not captured by the emission capture system; they are measured as they exit the temporary total enclosure or building enclosure during each capture efficiency test run. To make the measurement, substitute TVH for each occurrence of the term VOC in the methods.

(i) Use Method 204D of appendix M to 40 CFR part 51 if the enclosure is a temporary total enclosure.

(ii) Use Method 204E of appendix M to 40 CFR part 51 if the enclosure is a building enclosure. During the capture efficiency measurement, all organic compound emitting operations inside the building enclosure, other than the engine test cell/stand operation for which capture efficiency is being determined, must be shut down, but all fans and blowers must be operating normally.

(4) For each capture efficiency test run, determine the percent capture efficiency of the emission capture system using Equation 1 of this section:

$$CE = \frac{TVH_{captured}}{\left(TVH_{captured} + TVH_{uncaptured}\right)} \times 100 \qquad \text{(Eq. 1)}$$

Where:

CE = capture efficiency of the emission capture system vented to the add-on control device, percent

$TVH_{captured}$ = total mass of TVH captured by the emission capture system as measured at the inlet to the add-on control device during the emission capture efficiency test run, kg, determined according to paragraph (c)(2) of this section

$TVH_{uncaptured}$ = total mass of TVH that is not captured by the emission capture system and that exits from the temporary total enclosure or building enclosure during the capture efficiency test run, kg, determined according to paragraph (c)(3) of this section.

(5) Determine the capture efficiency the emission capture system as the average of the capture efficiencies measured in the three test runs.

(d) *Alternative capture efficiency protocol.* As an alternative to the procedure specified in paragraph (c) of this section, you may determine capture efficiency using any other capture efficiency protocol and test methods that satisfy the criteria of either the data quality objective or lower control limit approach as described in appendix A to subpart KK of this part.

### §63.9323 How do I determine the add-on control device emission destruction or removal efficiency?

You must use the procedures and test methods in this section to determine the add-on control device emission destruction or removal efficiency as part of the performance test required by §63.9310. You must conduct three test runs as specified in §63.7(e)(3), and each test run must last at least 1 hour.

(a) For all types of add-on control devices, use the test methods specified in paragraphs (a)(1) through (5) of this section.

(1) Use Method 1 or 1A of appendix A to 40 CFR part 60, as appropriate, to select sampling sites and velocity traverse points.

(2) Use Method 2, 2A, 2C, 2D, 2F, or 2G of appendix A to 40 CFR part 60, as appropriate, to measure gas volumetric flow rate.

(3) Use Method 3, 3A, or 3B of appendix A to 40 CFR part 60, as appropriate, for gas analysis to determine dry molecular weight. The ANSI/ASME PTC 19.10–1981 Part 10 is an acceptable alternative to Method 3B (incorporated by reference, see §63.14).

(4) Use Method 4 of appendix A to 40 CFR part 60, to determine stack gas moisture.

(5) Methods for determining gas volumetric flow rate, dry molecular weight, and stack gas moisture must be performed, as applicable, during each test run.

(b) Measure total gaseous organic mass emissions as carbon at the inlet and outlet of the add-on control device simultaneously, using either Method 25 or 25A of appendix A to 40 CFR part 60, as specified in paragraphs (b)(1) through (3) of this section. You must use the same method for both the inlet and outlet measurements.

(1) Use Method 25 of appendix A to 40 CFR part 60 if the add-on control device is an oxidizer, and you expect the total gaseous organic concentration as carbon to be more than 50 parts per million at the control device outlet.

(2) Use Method 25A of appendix A to 40 CFR part 60 if the add-on control device is an oxidizer, and you expect the total gaseous organic concentration as carbon to be 50 ppm or less at the control device outlet.

(c) For each test run, determine the total gaseous organic emissions mass flow rates for the inlet and the outlet of the add-on control device, using Equation 1 of this section. If there is more than one inlet or outlet to the add-on control device, you must calculate the total gaseous organic mass flow rate using Equation 1 of this section for each inlet and each outlet and then total all of the inlet emissions and total all of the outlet emissions.

$$M_f = Q_{sd} C_c (12)(0.0416)\left(10^{-6}\right) \qquad \text{(Eq. 1)}$$

Where:

$M_f$ = total gaseous organic emissions mass flow rate, kg/hour (kg/h)

$C_c$ = concentration of organic compounds as carbon in the vent gas, as determined by

Method 25 or Method 25A, parts per million by volume (ppmv), dry basis

$Q_{sd}$ = volumetric flow rate of gases entering or exiting the add-on control device, as determined by Method 2, 2A, 2C, 2D, 2F, or 2G, dry standard cubic meters/hour (dscm/h)

0.0416 = conversion factor for molar volume, kg-moles per cubic meter (mol/m³) (@ 293 Kelvin [K] and 760 millimeters of mercury [mmHg]).

(d) For each test run, determine the add-on control device organic emissions destruction or removal efficiency, using Equation 2 of this section:

$$DRE = 100 \times \frac{M_{fi} - M_{fo}}{M_{fi}} \qquad \text{(Eq. 2)}$$

Where:

DRE = organic emissions destruction or removal efficiency of the add-on control device, percent

$M_{fi}$ = total gaseous organic emissions mass flow rate at the inlet(s) to the add-on control device, using Equation 1 of this section, kg/h

$M_{fo}$ = total gaseous organic emissions mass flow rate at the outlet(s) of the add-on control device, using Equation 1 of this section, kg/h.

(e) Determine the emission destruction or removal efficiency of the add-on control device as the average of the efficiencies determined in the three test runs and calculated in Equation 2 of this section.

### § 63.9324 How do I establish the emission capture system and add-on control device operating limits during the performance test?

During the performance test required by § 63.9310, you must establish the operating limits required by § 63.9302 according to this section, unless you have received approval for alternative monitoring and operating limits under § 63.8(f) as specified in § 63.9302.

(a) *Thermal oxidizers.* If your add-on control device is a thermal oxidizer, establish the operating limits according to paragraphs (a)(1) and (2) of this section.

(1) During the performance test, you must monitor and record the combustion temperature at least once every 15 minutes during each of the three test runs. You must monitor the temperature in the firebox of the thermal oxidizer or immediately downstream of the firebox before any substantial heat exchange occurs.

(2) Use the data collected during the performance test to calculate and record the average combustion temperature maintained during the performance test. This average combustion temperature is the minimum operating limit for your thermal oxidizer.

(b) *Catalytic oxidizers.* If your add-on control device is a catalytic oxidizer, establish the operating limits according to either paragraphs (b)(1) and (2) or paragraphs (b)(3) and (4) of this section.

(1) During the performance test, you must monitor and record the temperature just before the catalyst bed and the temperature difference across the catalyst bed at least once every 15 minutes during each of the three test runs.

(2) Use the data collected during the performance test to calculate and record the average temperature just before the catalyst bed and the average temperature difference across the catalyst bed maintained during the performance test. These are the minimum operating limits for your catalytic oxidizer.

(3) As an alternative to monitoring the temperature difference across the catalyst bed, you may monitor the temperature at the inlet to the catalyst bed and implement a site-specific inspection and maintenance plan for your catalytic oxidizer as specified in paragraph (b)(4) of this section. During the performance test, you must monitor and record the temperature just before the catalyst bed at least once every 15 minutes during each of the three test runs. Use the data collected during the performance test to calculate and record the average temperature just before the catalyst bed during the performance test. This is the minimum operating limit for your catalytic oxidizer.

(4) You must develop and implement an inspection and maintenance plan for your catalytic oxidizer(s) for which you elect to monitor according to paragraph (b)(3) of this section. The plan must address, at a minimum, the elements specified in paragraphs (b)(4)(i) through (iii) of this section.

(i) Annual sampling and analysis of the catalyst activity (i.e., conversion efficiency) following the manufacturer's or catalyst supplier's recommended procedures.

(ii) Monthly inspection of the oxidizer system, including the burner assembly and fuel supply lines for problems and, as necessary, adjust the equipment to assure proper air-to-fuel mixtures.

(iii) Annual internal and monthly external visual inspection of the catalyst bed to check for channeling, abrasion, and settling. If problems are found, you must take corrective action consistent with the manufacturer's recommendation and conduct a new performance test to determine destruction efficiency according to § 63.9323.

(c) *Emission capture system.* For each capture device that is not part of a PTE that meets the criteria of § 63.9322(a), establish an operating limit for either the gas volumetric flow rate or duct static pressure, as specified in paragraphs (c)(1) and (2) of this section. The operating limit for a PTE is specified in Table 3 to this subpart.

(1) During the capture efficiency determination required by § 63.9310, you must monitor and record either the gas volumetric flow rate or the duct static pressure for each separate capture device in your emission capture system at least once every 15 minutes during each of the three test runs at a point in the duct between the capture device and the add-on control device inlet.

(2) Calculate and record the average gas volumetric flow rate or duct static pressure for the three test runs for each capture device. This average gas volumetric flow rate or duct static pressure is the minimum operating limit for that specific capture device.

### § 63.9330 How do I demonstrate initial compliance with the emission limitation?

(a) You must demonstrate initial compliance with the emission limitation that applies to you according to Table 4 to this subpart.

(b) You must submit the Notification of Compliance Status containing results of the initial compliance demonstration according to the requirements in § 63.9345(c).

[68 FR 28785, May 27, 2003, as amended at 85 FR 34346, June 3, 2020]

CONTINUOUS COMPLIANCE REQUIREMENTS

### § 63.9335 How do I monitor and collect data to demonstrate continuous compliance?

(a) Except for monitor malfunctions, associated repairs, and required quality assurance or quality control activities (including, as applicable, calibration drift checks and required zero and high-level adjustments of the monitoring system), you must conduct all monitoring in continuous operation at all times the engine test cell/stand is operating.

(b) Do not use data recorded during monitor malfunctions, associated repairs, and required quality assurance or quality control activities for meeting the requirements of this subpart, including data averages and calculations. You must use all the data collected during all other periods in assessing the performance of the emission control device or in assessing emissions from the new or reconstructed affected source.

### § 63.9340 How do I demonstrate continuous compliance with the emission limitations?

(a) You must demonstrate continuous compliance with the emission limitation in Table 1 to this subpart that applies to you according to methods specified in Table 5 to this subpart.

(b) You must report each instance in paragraphs (b)(1) and (2) of this section. These instances are deviations from the emission limitation in this subpart and must be reported according to the requirements in § 63.9350.

(1) You must report each instance in which you did not meet the emission limitation that applies to you.

(2) You must report each instance in which you did not meet the requirements in Table 7 to this subpart that apply to you.

(c) Startups, shutdowns, and malfunctions:

(1) For affected sources prior to December 1, 2020, consistent with §§ 63.6(e) and 63.7(e)(1), deviations that occur

during a period of SSM of control devices and associated monitoring equipment are not violations if you demonstrate to the Administrator's satisfaction that you were operating in accordance with § 63.6(e)(1).

(2) The Administrator will determine whether deviations that occur during a period you identify as an SSM of control devices and associated monitoring equipment are violations, according to the provisions in § 63.6(e).

[68 FR 28785, May 27, 2003, as amended at 71 FR 20470, Apr. 20, 2006; 85 FR 34346, June 3, 2020]

NOTIFICATIONS, REPORTS, AND RECORDS

### § 63.9345 What notifications must I submit and when?

(a) You must submit all of the notifications in §§ 63.8(e), 63.8(f)(4) and (6), and 63.9(b), (g)(1), (g)(2) and (h) that apply to you by the dates specified.

(b) If you own or operate a new or reconstructed test cell/stand used for testing internal combustion engines, you are required to submit an Initial Notification as specified in paragraphs (b)(1) through (3) of this section.

(1) As specified in § 63.9(b)(2), if you start up your new or reconstructed affected source before the effective date of this subpart, you must submit an Initial Notification not later than 120 calendar days after May 27, 2003, or no later than 120 days after the source becomes subject to this subpart, whichever is later.

(2) As specified in § 63.9(b), if you start up your new or reconstructed affected source on or after the effective date of this subpart, you must submit an Initial Notification not later than 120 calendar days after you become subject to this subpart.

(3) If you are required to submit an Initial Notification but are otherwise not affected by the requirements of this subpart, in accordance with § 63.9290(c), your notification should include the information in § 63.9(b)(2)(i) through (v) and a statement that your new or reconstructed engine test cell/stand has no additional requirements and explain the basis of the exclusion (for example, that the test cell/stand is used exclusively for testing internal combustion engines with rated power of less than 25 hp (19 kW)).

(c) If you are required to comply with the emission limitations in Table 1 to this subpart, you must submit a Notification of Compliance Status according to § 63.9(h)(2)(ii). For each initial compliance demonstration with the emission limitation, you must submit the Notification of Compliance Status before the close of business on the 30th calendar day following the completion of the initial compliance demonstration.

(d) You must submit a notification of initial performance evaluation of your CEMS or performance testing of your control device at least 60 calendar days before the performance testing/evaluation is scheduled to begin as required in § 63.8(e)(2).

[68 FR 28785, May 27, 2003, as amended 85 FR 73916, Nov. 19, 2020]

### § 63.9350 What reports must I submit and when?

(a) If you own or operate a new or reconstructed affected source that must meet the emission limitation, you must submit a semiannual compliance report according to Table 6 to this subpart by the applicable dates specified in paragraphs (a)(1) through (6) of this section, unless the Administrator has approved a different schedule.

(1) The first semiannual compliance report must cover the period beginning on the compliance date specified in § 63.9295 and ending on June 30 or December 31, whichever date is the first date following the end of the first calendar half after the compliance date specified in § 63.9295.

(2) The first semiannual compliance report must be postmarked or delivered no later than July 31 or January 31, whichever date follows the end of the first calendar half after the compliance date that is specified in § 63.9295.

(3) Each subsequent semiannual compliance report must cover the semiannual reporting period from January 1 through June 30 or the semiannual reporting period from July 1 through December 31.

(4) Each subsequent semiannual compliance report must be postmarked or delivered no later than July 31 or January 31, whichever date is the first date

following the end of the semiannual reporting period.

(5) For each new or reconstructed engine test cell/stand that is subject to permitting regulations pursuant to 40 CFR part 70 or 71, and if the permitting authority has established the date for submitting semiannual reports pursuant to 40 CFR 70.6(a)(3)(iii)(A) or 40 CFR 71.6(a)(3)(iii)(A), you may submit the first and subsequent compliance reports according to the dates the permitting authority has established instead of according to the dates in paragraphs (a)(1) through (4) of this section.

(6) For affected sources prior to December 1, 2020, if you had an SSM of a control device or associated monitoring equipment during the reporting period and you took actions consistent with your SSMP, the compliance report must include the information in paragraphs §63.10(d)(5)(i).

(7) Beginning on December 1, 2020, submit all semiannual compliance reports following the procedure specified in paragraph (g) of this section.

(b) If there is no deviation from the applicable emission limitation and the CEMS or CPMS was not out-of-control, according to §63.8(c)(7), the semiannual compliance report must contain the information described in paragraphs (b)(1) through (4) of this section.

(1) Company name and address.

(2) Statement by a responsible official, with that official's name, title, and signature, certifying the truth, accuracy, and completeness of the content of the report.

(3) Date of report and beginning and ending dates of the reporting period.

(4) A statement that no deviation from the emission limit occurred during the reporting period and that no CEMS or CPMS was out-of-control, according to §63.8(c)(7).

(c) For each deviation from an emission limit, the semiannual compliance report must include the information in paragraphs (b)(1) through (3) of this section and the information included in paragraphs (c)(1) through (4) of this section, except that on and after December 1, 2020 the semiannual compliance report must also include the information included in paragraph (c)(5) of this section.

(1) The date and time that each deviation started and stopped.

(2) The total operating time of each new or reconstructed engine test cell/stand during the reporting period.

(3) A summary of the total duration of the deviation during the reporting period (recorded in 4-hour periods), and the total duration as a percent of the total operating time during that reporting period.

(4) A breakdown of the total duration of the deviations during the reporting period into those that are due to control equipment problems, process problems, other known causes, and other unknown causes.

(5) An estimate of the quantity of each regulated pollutant emitted over any emission limit, and a description of the method used to estimate the emissions.

(d) For each CEMS or CPMS deviation, the semiannual compliance report must include the information in paragraphs (b)(1) through (3) of this section and the information included in paragraphs (d)(1) through (10) of this section, except that on and after December 1, 2020, the semiannual compliance report must also include the information included in paragraph (d)(11) of this section.

(1) The date and time that each CEMS or CPMS was inoperative except for zero (low-level) and high-level checks.

(2) The date and time that each CEMS or CPMS was out-of-control including the information in §63.8(c)(8).

(3) A summary of the total duration of CEMS or CPMS downtime during the reporting period (reported in 4-hour periods), and the total duration of CEMS or CPMS downtime as a percent of the total engine test cell/stand operating time during that reporting period.

(4) A breakdown of the total duration of CEMS or CPMS downtime during the reporting period into periods that are due to monitoring equipment malfunctions, nonmonitoring equipment malfunctions, quality assurance/quality control calibrations, other known causes and other unknown causes.

(5) The monitoring equipment manufacturer(s) and model number(s) of each monitor.

(6) The date of the latest CEMS or CPMS certification or audit.

(7) The date and time period of each deviation from an operating limit in Table 2 to this subpart; date and time period of any bypass of the add-on control device; and whether each deviation occurred during a period of SSM or during another period.

(8) A summary of the total duration of each deviation from an operating limit in Table 2 to this subpart, each bypass of the add-on control device during the semiannual reporting period, and the total duration as a percent of the total source operating time during that semiannual reporting period.

(9) A breakdown of the total duration of the deviations from the operating limits in Table 2 to this subpart and bypasses of the add-on control device during the semiannual reporting period by identifying deviations due to startup, shutdown, control equipment problems, process problems, other known causes, and other unknown causes.

(10) A description of any changes in CEMS, CPMS, or controls since the last reporting period.

(11) The total operating time of each new or reconstructed engine test cell/stand during the reporting period.

(e) Prior to December 1, 2020, if you had an SSM of a control device or associated monitoring equipment during the semiannual reporting period that was not consistent with your SSMP, you must submit an immediate SSM report according to the requirements in § 63.10(d)(5)(ii).

(f) Within 60 days after the date of completing each performance test or performance evaluation required by this subpart, you must submit the results of the performance test following the procedures specified in paragraphs (f)(1) through (3) of this section.

(1) Data collected or performance evaluations of CMS measuring relative accuracy test audit (RATA) pollutants using test methods supported by the EPA's Electronic Reporting Tool (ERT) as listed on the EPA's ERT website (*https://www.epa.gov/electronic-reporting-air-emissions/electronic-reporting-tool-ert*) at the time of the test. Submit the results of the performance test or performance evaluation to the EPA via the Compliance and Emissions Data Reporting Interface (CEDRI), which can be accessed through the EPA's Central Data Exchange (CDX) (*https://cdx.epa.gov/*). The data must be submitted in a file format generated through the use of the EPA's ERT. Alternatively, you may submit an electronic file consistent with the extensible markup language (XML) schema listed on the EPA's ERT website.

(2) Data collected or performance evaluations of CMS measuring RATA pollutants using test methods that are not supported by the EPA's ERT as listed on the EPA's ERT website at the time of the test. The results of the performance test or performance evaluation must be included as an attachment in the ERT or an alternate electronic file consistent with the XML schema listed on the EPA's ERT website. Submit the ERT generated package or alternative file to the EPA via CEDRI.

(3) If you claim some of the information submitted under paragraph (f) of this section is CBI, you must submit a complete file, including information claimed to be CBI, to the EPA. The file must be generated through the use of the EPA's ERT or an alternate electronic file consistent with the XML schema listed on the EPA's ERT website. Submit the file on a compact disc, flash drive, or other commonly used electronic storage medium and clearly mark the medium as CBI. Mail the electronic medium to U.S. EPA/OAQPS/CORE CBI Office, Attention: Group Leader, Measurement Policy Group, MD C404–02, 4930 Old Page Rd., Durham, NC 27703. The same file with the CBI omitted must be submitted to the EPA via the EPA's CDX as described in paragraph (f)(1) of this section.

(g) If you are required to submit reports following the procedure specified in this paragraph, you must submit reports to the EPA via CEDRI, which can be accessed through the EPA's CDX (*https://cdx.epa.gov/*). You must use the appropriate electronic report template on the CEDRI website (*https://www.epa.gov/electronic-reporting-air-emissions/compliance-and-emissions-data-reporting-interface-cedri*) for this subpart. The report must be submitted by

the deadline specified in this subpart, regardless of the method in which the report is submitted. If you claim some of the information required to be submitted via CEDRI is CBI, submit a complete report, including information claimed to be CBI, to the EPA. The report must be generated using the appropriate form on the CEDRI website. Submit the file on a compact disc, flash drive, or other commonly used electronic storage medium and clearly mark the medium as CBI. Mail the electronic medium to U.S. EPA/OAQPS/CORE CBI Office, Attention: Group Leader, Measurement Policy Group, MD C404–02, 4930 Old Page Rd., Durham, NC 27703. The same file with the CBI omitted must be submitted to the EPA via the EPA's CDX as described earlier in this paragraph.

(h) If you are required to electronically submit a report through CEDRI in the EPA's CDX, you may assert a claim of EPA system outage for failure to timely comply with the reporting requirement. To assert a claim of EPA system outage, you must meet the requirements outlined in paragraphs (h)(1) through (7) of this section.

(1) You must have been or will be precluded from accessing CEDRI and submitting a required report within the time prescribed due to an outage of either the EPA's CEDRI or CDX systems.

(2) The outage must have occured within the period of time beginning five business days prior to the date that the submission is due.

(3) The outage may be planned or unplanned.

(4) You must submit notification to the Administrator in writing as soon as possible following the date you first knew, or through due diligence should have known, that the event may cause or has caused a delay in reporting.

(5) You must provide to the Administrator a written description identifying:

(i) The date(s) and time(s) when CDX or CEDRI was accessed and the system was unavailable;

(ii) A rationale for attributing the delay in reporting beyond the regulatory deadline to EPA system outage;

(iii) Measures taken or to be taken to minimize the delay in reporting; and

(iv) The date by which you propose to report, or if you have already met the reporting requirement at the time of the notification, the date you reported.

(6) The decision to accept the claim of EPA system outage and allow an extension to the reporting deadline is solely within the discretion of the Administrator.

(7) In any circumstance, the report must be submitted electronically as soon as possible after the outage is resolved.

(i) If you are required to electronically submit a report through CEDRI in the EPA's CDX, you may assert a claim of force majeure for failure to timely comply with the reporting requirement. To assert a claim of force majuere, you must meet the requirements outlined in paragraphs (i)(1) through (5) of this section.

(1) You may submit a claim if a force majeure event is about to occur, occurs, or has occurred or there are lingering effects from such an event within the period of time beginning five business days prior to the date the submission is due. For the purposes of this section, a force majeure event is defined as an event that will be or has been caused by circumstances beyond the control of the affected facility, its contractors, or any entity controlled by the affected facility that prevents you from complying with the requirement to submit a report electronically within the time period prescribed. Examples of such events are acts of nature (*e.g.*, hurricanes, earthquakes, or floods), acts of war or terrorism, or equipment failure or safety hazard beyond the control of the affected facility (*e.g.*, large scale power outage).

(2) You must submit notification to the Administrator in writing as soon as possible following the date you first knew, or through due diligence should have known, that the event may cause or has caused a delay in reporting.

(3) You must provide to the Administrator:

(i) A written description of the force majeure event;

(ii) A rationale for attributing the delay in reporting beyond the regulatory deadline to the force majeure event;

(iii) Measures taken or to be taken to minimize the delay in reporting; and

(iv) The date by which you propose to report, or if you have already met the reporting requirement at the time of the notification, the date you reported.

(4) The decision to accept the claim of force majeure and allow an extension to the reporting deadline is solely within the discretion of the Administrator.

(5) In any circumstance, the reporting must occur as soon as possible after the force majeure event occurs.

[68 FR 28785, May 27, 2003, as amended at 85 FR 34346, June 3, 2020]

### § 63.9355 What records must I keep?

(a) You must keep the records as described in paragraphs (a)(1) through (5) of this section. After June 3, 2020, you must also keep the records as described in paragraphs (a)(6) through (8) of this section.

(1) A copy of each notification and report that you submitted to comply with this subpart, including all documentation supporting any Initial Notification or Notification of Compliance Status that you submitted, according to the requirements in § 63.10(b)(2)(xiv).

(2) Records of performance evaluations as required in § 63.10(b)(2)(viii).

(3) Records of the occurrence and duration of each malfunction of the air pollution control equipment, if applicable, as required in § 63.9355.

(4) Records of all maintenance on the air pollution control equipment, if applicable, as required in § 63.10(b)(iii).

(5) The calculation of the mass of organic HAP emission reduction by emission capture systems and add-on control devices.

(6) In the event that an affected unit fails to meet an applicable standard, record the number of failures. For each failure record the date, time, the cause, and duration of each failure.

(7) For each failure to meet an applicable standard, record and retain a list of the affected sources or equipment, an estimate of the quantity of each regulated pollutant emitted over any emission limit, and a description of the method used to estimate the emissions.

(8) Record actions taken to minimize emissions in accordance with § 63.9305, and any corrective actions taken to return the affected unit to its normal or usual manner of operation.

(b) For each CPMS, you must keep the records as described in paragraphs (b)(1) through (7) of this section.

(1) For each deviation, a record of whether the deviation occurred during a period of SSM of the control device and associated monitoring equipment.

(2) For affected sources prior to December 1, 2020, the records in § 63.6(e)(3)(iii) through (v) related to SSM.

(3) The records required to show continuous compliance with each operating limit specified in Table 2 to this subpart that applies to you.

(4) For each capture system that is a PTE, the data and documentation you used to support a determination that the capture system meets the criteria in Method 204 of appendix M to 40 CFR part 51 for a PTE and has a capture efficiency of 100 percent, as specified in § 63.9322(a).

(5) For each capture system that is not a PTE, the data and documentation you used to determine capture efficiency according to the requirements specified in §§ 63.9321 and 63.9322(b) through (e), including the records specified in paragraphs (b)(5)(i) and (ii) of this section that apply to you.

(i) Records for a gas-to-gas protocol using a temporary total enclosure or a building enclosure. Records of the mass of TVH emissions captured by the emission capture system as measured by Method 204B or C of appendix M to 40 CFR part 51 at the inlet to the add-on control device, including a copy of the test report. Records of the mass of TVH emissions not captured by the capture system that exited the temporary total enclosure or building enclosure during each capture efficiency test run as measured by Method 204D or E of appendix M to 40 CFR part 51, including a copy of the test report. Records documenting that the enclosure used for the capture efficiency test met the criteria in Method 204 of appendix M to 40 CFR part 51 for either a temporary total enclosure or a building enclosure.

(ii) Records for an alternative protocol. Records needed to document a capture efficiency determination using

an alternative method or protocol as specified in § 63.9322(e), if applicable.

(6) The records specified in paragraphs (b)(6)(i) and (ii) of this section for each add-on control device organic HAP destruction or removal efficiency determination as specified in § 63.9323.

(i) Records of each add-on control device performance test conducted according to §§ 63.9321, 63.9322, and 63.9323.

(ii) Records of the engine testing conditions during the add-on control device performance test showing that the performance test was conducted under representative operating conditions.

(7) Records of the data and calculations you used to establish the emission capture and add-on control device operating limits as specified in § 63.9324 and to document compliance with the operating limits as specified in Table 2 to this subpart.

(c) For each CEMS, you must keep the records as described in paragraph (c)(1) through (5) of this section.

(1) Records described in § 63.10(b)(2)(vi) through (xi).

(2) Previous (*i.e.*, superceded) versions of the performance evaluation plan as required in paragraph (c)(5) of this section.

(3) Request for alternatives to the relative accuracy test for CEMS as required in § 63.8(f)(6)(i), if applicable.

(4) For affected sources prior to December 1, 2020, the records in § 63.6(e)(3)(iii) through (v) related to SSM of the control device and associated monitoring equipment.

(5) The owner or operator shall keep these written procedures on record for the life of the affected source or until the affected source is no longer subject to the provisions of this part, to be made available for inspection, upon request, by the Administrator. If the performance evaluation plan is revised, the owner or operator shall keep previous (*i.e.*, superseded) versions of the performance evaluation plan on record to be made available for inspection, upon request, by the Administrator, for a period of 5 years after each revision to the plan. The program of corrective action should be included in the plan required under § 63.8(d)(2).

(d) You must keep the records required in Table 5 to this subpart to show continuous compliance with each emission limitation that applies to you.

[68 FR 28785, May 27, 2003, as amended at 85 FR 34347, June 3, 2020]

### § 63.9360 In what form and how long must I keep my records?

(a) You must maintain all applicable records in such a manner that they can be readily accessed and are suitable for inspection according to § 63.10(b)(1).

(b) As specified in § 63.10(b)(1), you must keep each records for 5 years following the date of each occurrence, measurement, maintenance, corrective action, report, or record.

(c) You must retain your records of the most recent 2 years on site, or your records must be accessible on site. Your records of the remaining 3 years may be retained off site.

(d) Any records required to be maintained by this part that are submitted electronically via the EPA's CEDRI may be maintained in electronic format. This ability to maintain electronic copies does not affect the requirement for facilities to make records, data, and reports available upon request to a delegated air agency or the EPA as part of an on-site compliance evaluation.

[68 FR 28785, May 27, 2003, as amended at 85 FR 34348, June 3, 2020]

## OTHER REQUIREMENTS AND INFORMATION

### § 63.9365 What parts of the General Provisions apply to me?

Table 7 to this subpart shows which parts of the General Provisions in §§ 63.1 through 63.15 apply to you.

### § 63.9370 Who implements and enforces this subpart?

(a) This subpart can be implemented and enforced by us, the U.S. EPA, or a delegated authority such as your State, local, or tribal agency. If the U.S. EPA Administrator has delegated authority to your State, local, or tribal agency, then that agency, in addition to the U.S. EPA, has the authority to implement and enforce this subpart. You should contact your U.S. EPA Regional Office to find out if implementation and enforcement of this subpart is delegated to your State, local, or tribal agency.

(b) In delegating implementation and enforcement authority of this subpart to a State, local, or tribal agency under section 40 CFR part 63, subpart E, the authorities contained in paragraph (c) of this section are retained by the Administrator of U.S. EPA and are not transferred to the State, local, or tribal agency.

(c) The authorities that cannot be delegated to State, local, or tribal agencies are described in paragraphs (c)(1) through (4) of this section.

(1) Approval of alternatives to the emission limitations in § 63.9300 under § 63.6(g).

(2) Approval of major changes to test methods under § 63.7(e)(2)(ii) and (f) and as defined in § 63.90.

(3) Approval of major changes to monitoring under § 63.8(f) and as defined in § 63.90.

(4) Approval of major changes to recordkeeping and reporting under § 63.10(f) and as defined in § 63.90.

### § 63.9375 What definitions apply to this subpart?

Terms used in this subpart are defined in the CAA; in 40 CFR 63.2, and in this section:

*CAA* means the Clean Air Act (42 U.S.C. 7401 *et seq.*, as amended by Public Law 101–549, 104 Statute 2399).

*Area source* means any stationary source of HAP that is not a major source as defined in this part.

*Combustion turbine engine* means a device in which air is compressed in a compressor, enters a combustion chamber, and is compressed further by the combustion of fuel injected into the combustion chamber. The hot compressed combustion gases then expand over a series of curved vanes or blades arranged on a central spindle that rotates.

*Deviation* means any instance in which an affected source subject to this subpart, or an owner or operator of such a source:

(1) Fails to meet any requirement or obligation established by this subpart, including but not limited to any emission limitations;

(2) Fails to meet any term or condition that is adopted to implement an applicable requirement in this subpart and that is included in the operating permit for any affected source required to obtain such a permit; or

(3) Prior to December 1, 2020, fails to meet any emission limitation or operating limit in this subpart during malfunction, regardless of whether or not such failure is permitted by this subpart.

*Engine* means any internal combustion engine, any combustion turbine engine, or any rocket engine.

*Engine Test Cell/Stand* means any apparatus used for testing uninstalled stationary or uninstalled mobile (motive) engines.

*Hazardous Air Pollutant (HAP)* means any air pollutant listed in or pursuant to section 112(b) of the CAA.

*Internal combustion engine* means a device in which air enters a combustion chamber, is mixed with fuel, compressed in the chamber, and combusted. Fuel may enter the combustion chamber with the air or be injected into the combustion chamber. Expansion of the hot combustion gases in the chamber rotates a shaft, either through a reciprocating or rotary action. For purposes of this subpart, this definition does not include combustion turbine engines.

*Major source,* as used in this subpart, shall have the same meaning as in § 63.2.

*Malfunction* means any sudden, infrequent, and not reasonably preventable failure of air pollution control equipment, process equipment, or a process to operate in a normal or usual manner which causes, or has the potential to cause, the emission limitations in an applicable standard to be exceeded. Failures that are caused in part by poor maintenance or careless operation are not malfunctions.

*Rated power* means the maximum power output of an engine in use.

*Potential to emit* means the maximum capacity of a stationary source to emit a pollutant under its physical and operational design. Any physical or operational limitation on the capacity of the stationary source to emit a pollutant, including air pollution control equipment and restrictions on hours of operation or on the type or amount of material combusted, stored, or processed, shall be treated as part of its design if the limitation or the effect it

would have on emissions is federally enforceable.

*Responsible official* means responsible official as defined by 40 CFR 70.2.

*Rocket engine* means a device consisting of a combustion chamber in which materials referred to as propellants, which provide both the fuel and the oxygen for combustion, are burned. Combustion gases escape through a nozzle, providing thrust.

*Uninstalled engine* means an engine not installed in, or an integrated part of, the final product.

[68 FR 28785, May 27, 2003, as amended at 71 FR 20470, Apr. 20, 2006; 85 FR 34348, June 3, 2020]

TABLE 1 TO SUBPART PPPPP OF PART 63—EMISSION LIMITATIONS

You must comply with the emission limits that apply to your affected source in the following table as required by § 63.9300.

| For each new or reconstructed affected source located at a major source facility that is used in whole or in part for testing . . . | You must meet one of the following emission limitations: |
|---|---|
| 1. internal combustion engines with rated power of 25 hp (19 kW) or more. | a. limit the concentration of CO or THC to 20 ppmvd or less (corrected to 15 percent $O_2$ content); or<br>b. achieve a reduction in CO or THC of 96 percent or more between the inlet and outlet concentrations (corrected to 15 percent $O_2$ content) of the emission control device. |

TABLE 2 TO SUBPART PPPPP OF PART 63—OPERATING LIMITS

If you are required to comply with operating limits in § 63.9302, you must comply with the applicable operating limits in the following table:

| For the following device . . . | You must meet the following operating limit . . . | and you must demonstrate continuous compliance with the operating limit by . . . |
|---|---|---|
| 1. Thermal oxidizer | a. The average combustion temperature in any 3-hour period must not fall below the combustion temperature limit established according to § 63.9324(a). | i. Collecting the combustion temperature data according to § 63.9306(c);<br>ii. Reducing the data to 3-hour block averages; and<br>iii. Maintaining the 3-hour average combustion temperature at or above the temperature limit. |
| 2. Catalytic oxidizer | a. The average temperature measured just before the catalyst bed in any 3-hour period must not fall below the limit established according to § 63.9324(b). | i. Collecting the temperature data according to § 63.9306(c);<br>ii. Reducing the data to 3-hour block averages; and<br>iii. Maintaining the 3-hour average temperature before the catalyst bed at or above the temperature limit. |
| | b. Either ensure that the average temperature difference across the catalyst bed in any 3-hour period does not fall below the temperature difference limit established according to § 63.9324(b)(2) or develop and implement an inspection and maintenance plan according to § 63.9324(b)(3) and (4). | i. Either collecting the temperature data according to § 63.9306(c), reducing the data to 3-hour block averages, and maintaining the 3-hour average temperature difference at or above the temperature difference limit; or<br>ii. Complying with the inspection and maintenance plan developed according to § 63.9324(b)(3) and (4). |
| 3. Emission capture system that is a PTE according to § 63.9322(a). | a. The direction of the air flow at all times must be into the enclosure; and either | i. Collecting the direction of air flow; and either the facial velocity of air through all natural draft openings according to § 63.9306(d)(1) or the pressure drop across the enclosure according to § 63.9306(d)(2); and<br>ii. Maintaining the facial velocity of air flow through all natural draft openings or the pressure drop at or above the facial velocity limit or pressure drop limit, and maintaining the direction of air flow into the enclosure at all times. |

| For the following device . . . | You must meet the following operating limit . . . | and you must demonstrate continuous compliance with the operating limit by . . . |
|---|---|---|
| | b. The average facial velocity of air through all natural draft openings in the enclosure must be at least 200 feet per minute; or | Follow the requirements in 3ai and ii of this table. |
| | c. The pressure drop across the enclosure must be at least 0.007 inch $H_2O$, as established in Method 204 of appendix M to 40 CFR part 51. | Follow the requirements in 3ai and ii of this table. |
| 4. Emission capture system that is not a PTE according to § 63.9322(a). | a. The average gas volumetric flow rate or duct static pressure in each duct between a capture device and add-on control device inlet in any 3-hour period must not fall below the average volumetric flow rate or duct static pressure limit established for that capture device according § 63.9306(d). | i. Collecting the gas volumetric flow rate or duct static pressure for each capture device according to § 63.9306(d);<br>ii. Reducing the data to 3-hour block averages; and<br>iii. Maintaining the 3-hour average gas volumetric flow rate or duct static pressure for each capture device at or above the gas volumetric flow rate or duct static pressure limit. |

## TABLE 3 TO SUBPART PPPPP OF PART 63—REQUIREMENTS FOR INITIAL COMPLIANCE DEMONSTRATIONS

As stated in § 63.9321, you must demonstrate initial compliance with each emission limitation that applies to you according to the following table:

| For each new or reconstructed affected source complying with . . . | You must . . . | Using . . . | According to the following requirements . . . |
|---|---|---|---|
| 1. The CO or THC outlet concentration emission limitation. | a. Demonstrate CO or THC emissions are 20 ppmvd or less. | i. EPA Methods 3A and 10 of appendix A to 40 CFR part 60 for CO measurement or EPA Method 25A of appendix A to 40 CFR part 60 for THC measurement; or | You must demonstrate that the outlet concentration of CO or THC emissions from the test cell/stand or emission control device is 20 ppmvd or less, corrected to 15 percent $O_2$ content, using the average of the test runs in the performance test. |
| | | ii. A CEMS for CO or THC and $O_2$ at the outlet of the engine test cell/stand or emission control device. | This demonstration is conducted immediately following a successful performance evaluation of the CEMS as required in § 63.9320 (b). The demonstration consists of the first 4-hour rolling average of measurements. The CO or THC concentration must be corrected to 15 percent $O_2$ content, dry basis using Equation 1 in § 63.9320. |
| 2. The CO or THC percent reduction emission limitation. | a. Demonstrate a reduction in CO or THC of 96 percent or more. | i. You must conduct an initial performance test to determine the capture and control efficiencies of the equipment and to establish operating limits to be achieved on a continuous basis; or | You must demonstrate that the reduction in CO or THC emissions is at least 96 percent using the first 4-hour rolling average after a successful performance evaluation. Your inlet and outlet measurements must be on a dry basis and corrected to 15 percent $O_2$ content. |

| For each new or reconstructed affected source complying with . . . | You must . . . | Using . . . | According to the following requirements . . . |
|---|---|---|---|
| | | ii. A CEMS for CO or THC and $O_2$ at both the inlet and outlet of the emission control device. | This demonstration is conducted immediately following a successful performance evaluation of the CEMS as required in § 63.9320(b). The demonstration consists of the first 4-hour rolling average of measurements. The inlet and outlet CO or THC concentrations must be corrected to 15 percent $O_2$ content using Equation 1 in § 63.9320. The reduction in CO or THC is calculated using Equation 2 in § 63.9320. |

[68 FR 28785, May 27, 2003, as amended at 85 FR 34348, June 3, 2020]

## Table 4 to Subpart PPPPP of Part 63—Initial Compliance With Emission Limitations

As stated in § 63.9330, you must demonstrate initial compliance with each emission limitation that applies to you according to the following table:

| For the . . . | You have demonstrated initial compliance if . . . |
|---|---|
| 1. CO or THC concentration emission limitation. | The first 4-hour rolling average CO or THC concentration is 20 ppmvd or less, corrected to 15 percent $O_2$ content if CEMS are installed or the average of the test run averages during the performance test is 20 ppmvd or less, corrected to 15 percent $O_2$ content. |
| 2. CO or THC percent reduction emission limitation. | The first 4-hour rolling average reduction in CO or THC is 96 percent or more, dry basis, corrected to 15 percent $O_2$ content. |

[68 FR 28785, May 27, 2003, as amended at 85 FR 34348, June 3, 2020]

## Table 5 to Subpart PPPPP of Part 63—Continuous Compliance With Emission Limitations

As stated in § 63.9340, you must demonstrate continuous compliance with each emission limitation that applies to you according to the following table:

| For the . . . | You must . . . | By . . . |
|---|---|---|
| 1. CO or THC concentration emission limitation. | a. Demonstrate CO or THC emissions are 20 ppmvd or less over each 4-hour rolling averaging period. | i. Collecting the CPMS data according to § 63.9306(a), reducing the measurements to 1-hour averages used to calculate the 3-hr block average; or<br>ii. Collecting the CEMS data according to § 63.9307(a), reducing the measurements to 1-hour averages, correcting them to 15 percent $O_2$ content, dry basis, according to § 63.9320. |
| 2. CO or THC percent reduction emission limitation. | a. Demonstrate a reduction in CO or THC of 96 percent or more over each 4-hour rolling averaging period. | i. Collecting the CPMS data according to § 63.9306(a), reducing the measurements to 1-hour averages; or<br>ii. Collecting the CEMS data according to § 63.9307(b), reducing the measurements to 1-hour averages, correcting them to 15 percent $O_2$ content, dry basis, calculating the CO or THC percent reduction according to § 63.9320. |

[68 FR 28785, May 27, 2003, as amended at 85 FR 34345, June 3, 2020]

TABLE 6 TO SUBPART PPPPP OF PART 63—REQUIREMENTS FOR REPORTS

As stated in §63.9350, you must submit each report that applies to you according to the following table:

| If you own or operate a new or reconstructed affected source that must comply with emission limitations, you must submit a . . . | The report must contain . . . | You must submit the report . . . |
|---|---|---|
| 1. Compliance report | a. If there are no deviations from the emission limitations that apply to you, a statement that there were no deviations from the emission limitations during the reporting period. | Semiannually, according to the requirements in §63.9350. |
| | b. If there were no periods during which the CEMS or CPMS were out of control as specified in §63.8(c)(7), a statement that there were no periods during which the CEMS or CPMS was out of control during the reporting period. | Semiannually, according to the requirements in §63.9350. |
| | c. If you have a deviation from any emission limitation during the reporting period, the report must contain the information in §63.9350(c). | Semiannually, according to the requirements in §63.9350. |
| | d. If there were periods during which the CEMS or CPMS were out of control, as specified in §63.8(c)(7), that report must contain the information in §63.9350(d). | Semiannually, according to the requirements in §63.9350. |
| | e. If you had an SSM of a control device or associated monitoring equipment during the reporting period, the report must include the information in §63.10(d)(5)(i). | Semiannually, according to the requirements in §63.9350. |

TABLE 7 TO SUBPART PPPPP OF PART 63—APPLICABILITY OF GENERAL PROVISIONS TO SUBPART PPPPP

As stated in 63.9365, you must comply with the General Provisions in §§63.1 through 63.15 that apply to you according to the following table:

| Citation | Subject | Applicable to subpart PPPPP | Explanation |
|---|---|---|---|
| §63.1(a)(1)–(12) | General Applicability | Yes. | |
| §63.1(b)(1)–(3) | Initial Applicability Determination | Yes | Applicability to subpart PPPPP is also specified in §63.9285. |
| §63.1(c)(1) | Applicability After Standard Established. | Yes. | |
| §63.1(c)(2) | Applicability of Permit Program for Area Sources. | No | Area sources are not subject to subpart PPPPP. |
| §63.1(c)(5) | Notifications | Yes. | |
| §63.1(c)(6) | Applicability | Reclassification | Yes. |
| §63.1(d) | [Reserved]. | | |
| §63.1(e) | Applicability of Permit Program Before Relevant Standard is Set. | Yes. | |
| §63.2 | Definitions | Yes | Additional definitions are specified in §63.9375. |
| §63.3 | Units and Abbreviations | Yes. | |
| §63.4 | Prohibited Activities and Circumvention. | Yes. | |
| §63.5(a) | Construction/Reconstruction | Yes. | |
| §63.5(b) | Requirements for Existing, Newly Constructed, and Reconstructed Sources. | Yes. | |
| §63.5(d) | Application for Approval of Construction/Reconstruction. | Yes. | |

| Citation | Subject | Applicable to subpart PPPPP | Explanation |
|---|---|---|---|
| § 63.5(e) | Approval of Construction/Reconstruction. | Yes. | |
| § 63.5(f) | Approval of Construction/Reconstruction based on Prior State Review. | Yes. | |
| § 63.6(a) | Compliance With Standards and Maintenance Requirements-Applicability. | Yes. | |
| § 63.6(b)(1)–(7) | Compliance Dates for New and Reconstructed Sources. | Yes | § 63.9295 specifies the compliance dates. |
| § 63.6(c)(1)–(2) | Compliance Dates for Existing Sources. | No | Subpart PPPPP does not establish standards for existing sources. |
| § 63.6(c)(5) | Compliance Dates for Existing Sources. | Yes | § 63.9295(b) specifies the compliance date if a new or reconstructed area source becomes a major source. |
| § 63.6(e)(1)(i) | Operation and Maintenance | Yes before December 1, 2020. No on and after December 1, 2020. | See § 63.9305 for general duty requirement. |
| § 63.6(e)(1)(ii) | Operation and Maintenance | Yes before December 1, 2020. No on and after December 1, 2020. | |
| § 63.6(e)(1)(iii) | Operation and Maintenance | Yes. | |
| § 63.6(e)(3) | SSM Plan | Yes before December 1, 2020. No on and after December 1, 2020. | |
| § 63.6(f)(1) | Compliance Except During SSM | Yes before December 1, 2020. No on and after December 1, 2020. | |
| § 63.6(f)(2)–(3) | Methods for Determining Compliance. | Yes. | |
| § 63.6(g)(1)–(3) | Use of Alternative Standards | Yes. | |
| § 63.6(h) | Compliance With Opacity/Visible Emission Standards. | No | Subpart PPPPP does not establish opacity standards and does require continuous opacity monitoring systems (COMS). |
| § 63.6(i)(1)–(16) | Extension of Compliance | No | Compliance extension provisions apply to existing sources which do not have emission limitations in subpart PPPPP. |
| § 63.6(j) | Presidential Compliance Exemption | Yes. | |
| § 63.7(a)(1)–(2) | Performance Test Dates | Yes. | |
| § 63.7(a)(3) | Performance Test Required By the Administrator. | Yes. | |
| § 63.7(b)–(d) | Performance Test Requirements-Notification, Quality Assurance, Facilities Necessary for Safe Testing, Conditions During Testing. | Yes. | |
| § 63.7(e)(1) | Conditions for Conducting Performance Tests. | Yes before December 1, 2020. No, see § 63.9321, on and after December 1, 2020. | |
| § 63.7(e)(2)–(4) | Conduct of Performance Tests | Yes. | |
| § 63.7(f) | Alternative Test Methods | Yes. | |
| § 63.7(g)–(h) | Performance Testing Requirements-Data Analysis, Recordkeeping, Reporting, Waiver of Test. | Yes. | |
| § 63.8(a)(1)–(2) | Monitoring Requirements—Applicability. | Yes | Subpart PPPPP contains specific requirement for monitoring at § 63.9325. |
| § 63.8(a)(4) | Additional Monitoring Requirements | No | Subpart PPPPP does not have monitoring requirement for flares. |
| § 63.8(b) | Conduct of Monitoring | Yes. | |
| § 63.8(c)(1) | Continuous Monitoring System (CMS) Operation and Maintenance. | Yes. | |
| § 63.8(c)(1)(i) | General Duty to Minimize Emissions and CMS Operation. | Yes before December 1, 2020. No on and after December 1, 2020. | |
| § 63.8(c)(1)(ii) | Operation and Maintenance of CMS | Yes. | |
| § 63.8(c)(1)(iii) | Requirement to Develop SSM Plan for CMS. | Yes before December 1, 2020. No on and after December 1, 2020. | |

| Citation | Subject | Applicable to subpart PPPPP | Explanation |
|---|---|---|---|
| § 63.8(c)(2)–(3) | Monitoring System Installation | Yes. | |
| § 63.8(c)(4) | CMS | No | § 63.9335(a) and (b) specifies the requirements. |
| § 63.8(c)(5) | COMS | No | Subpart PPPPP does not have opacity or VE standards. |
| § 63.8(c)(6)–(8) | CMS Requirements | Yes | Except that subpart PPPPP does not require COMS. |
| § 63.8(d)(1)–(2) | CMS Quality Control | Yes. | |
| § 63.8(d)(3) | CMS Quality Control | Yes before December 1, 2020. No on and after December 1, 2020. | |
| § 63.8(e) | CMS Performance | Yes | Except for § 63.8(e)(5)(ii) which applies to COMS. |
| § 63.8(f)(1)–(5) | Alternative Monitoring Method | Yes. | |
| § 63.8(f)(6) | Alternative to Relative Accuracy Test | Yes. | |
| § 63.8(g) | Data Reduction | Yes before December 1, 2020. No on and after December 1, 2020. | §§ 63.9335 and 63.9340 specify monitoring data reduction. |
| § 63.9(a)–(b) | Notification Requirements | Yes. | |
| § 63.9(c) | Request for Compliance Extension | No | Compliance extension to not apply to new or reconstructed sources. |
| § 63.9(d) | Notification of Special Compliance Requirements for New Sources. | Yes. | |
| § 63.9(e) | Notification of Performance Test | No | Subpart PPPPP does not require performance testing. |
| § 63.9(f) | Notification of Opacity/VE test | No | Subpart PPPPP does not have opacity/VE standards. |
| § 63.9(g)(1) | Additional Notifications When Using CMS. | Yes. | |
| § 63.9(g)(2) | Additional Notifications When Using CMS. | No | Subpart PPPPP does not have opacity/VE standards. |
| § 63.9(g)(3) | Additional Notifications When Using CMS. | Yes. | |
| § 63.9(h) | Notification of Compliance Status | Yes. | |
| § 63.9(i) | Adjustment of Submittal Deadlines | Yes. | |
| § 63.9(j) | Change in Previous Information | Yes. | |
| § 63.9(k) | Notifications | Electronic reporting procedures. | Yes, only as specified in § 63.9(j). |
| § 63.10(a) | Recordkeeping/Reporting | Yes. | |
| § 63.10(b)(1) | General Recordkeeping Requirements. | Yes. | |
| § 63.10(b)(2)(i) | Recordkeeping of Occurrence and Duration of Startups and Shutdowns. | Yes before December 1, 2020. No on and after December 1, 2020. | |
| § 63.10(b)(2)(ii) | Recordkeeping of Occurrence and Duration of Malfunctions. | Yes before December 1, 2020. No on and after December 1, 2020. | See § 63.9355 for recordkeeping of (1) date, time, and duration; (2) listing of affected source or equipment, and an estimate of the quantity of each regulated pollutant emitted over the standard; and (3) actions to minimize emissions and correct the failure. |
| § 63.10(b)(2)(iii) | Recordkeeping of Maintenance on Controls and Monitoring Equipment. | Yes. | |
| § 63.10(b)(2)(iv)–(v) | Actions Taken to Minimize Emissions During SSM. | Yes before December 1, 2020. No on and after December 1, 2020. | |
| § 63.10(b)(2)(vi)–(xi) | CMS Records | Yes. | |
| § 63.10(b)(2)(xii) | Records | Yes. | |
| § 63.10(b)(2)(xiii) | Records | Yes. | |
| § 63.10(b)(2)(xiv) | Records | Yes. | |
| § 63.10(b)(3) | Recordkeeping for Applicability Determinations. | Yes. | |
| § 63.10(c)(1)–(6), (9)–(14). | Additional Recordkeeping for CMS | Yes. | |
| § 63.10(c)(7)–(8) | Records of Excess Emissions and Parameter Monitoring Exceedances for CMS. | No | Specific language is located at § 63.9355 of subpart PPPPP. |
| § 63.10(c)(15) | Records Regarding the SSM Plan | Yes before December 1, 2020. No on and after December 1, 2020. | |
| § 63.10(d)(1) | General Reporting Requirements | Yes. | |

| Citation | Subject | Applicable to subpart PPPPP | Explanation |
|---|---|---|---|
| § 63.10(d)(2) | Report of Performance Test Results | Yes. | |
| § 63.10(d)(3) | Reporting of Opacity or VE Observations. | No | Subpart PPPPP does not have opacity/VE standards. |
| § 63.10(d)(4) | Progress Reports for Sources with Compliance Extensions. | No | Compliance extensions do not apply to new or reconstructed sources. |
| § 63.10(d)(5) | SSM Reports | Yes before December 1, 2020. No on and after December 1, 2020. | On and after December 1, 2020, see § 63.9350 for malfunction reporting requirements. |
| § 63.10(e)(1) and (2)(i). | Additional CMS Reports | Yes. | |
| § 63.10(e)(2)(ii) | Additional CMS Reports | No | Subpart PPPPP does not require COMS. |
| § 63.10(e)(3) | Excess Emissions/CMS Performance Reports. | No | Specific language in located in § 63.9350 of subpart PPPPP. |
| § 63.10(e)(4) | COMS Data Reports | No | Subpart PPPPP does not require COMS. |
| § 63.10(f) | Waiver for Recordkeeping/Reporting | Yes. | |
| § 63.11 | Control Device Requirements/Flares | No | Subpart PPPPP does not specify use of flares for compliance. |
| § 63.12 | State Authority and Delegations | Yes. | |
| § 63.13 | Addresses | Yes. | |
| § 63.14 | Incorporation by Reference | Yes | ASTM D 6522–00 and ANSI/ASME PTC 19.10–1981 (incorporated by reference—See § 63.14). |
| § 63.15 | Availability of Information/Confidentiality. | Yes. | |

[85 FR 34349, June 3, 2020, as amended at 85 FR 73917, Nov. 19, 2020]

## Subpart QQQQQ—National Emission Standards for Hazardous Air Pollutants for Friction Materials Manufacturing Facilities

SOURCE: 67 FR 64506, Oct. 18, 2002, unless otherwise noted.

WHAT THIS SUBPART COVERS

### § 63.9480 What is the purpose of this subpart?

This subpart establishes national emission standards for hazardous air pollutants (NESHAP) for friction materials manufacturing facilities that use a solvent-based process. This subpart also establishes requirements to demonstrate initial and continuous compliance with all applicable emission limitations in this subpart.

### § 63.9485 Am I subject to this subpart?

(a) You are subject to this subpart if you own or operate a friction materials manufacturing facility (as defined in § 63.9565) that is (or is part of) a major source of hazardous air pollutants (HAP) emissions. Your friction materials manufacturing facility is a major source of HAP if it emits or has the potential to emit any single HAP at a rate of 9.07 megagrams (10 tons) or more per year or any combination of HAP at a rate of 22.68 megagrams (25 tons) or more per year.

(b) The requirements in this subpart do not apply to research and development facilities, as defined in section 112(c)(7) of the Clean Air Act.

[67 FR 64506, Oct. 18, 2002, as amended at 85 FR 73917, Nov. 19, 2020]

### § 63.9490 What parts of my plant does this subpart cover?

(a) This subpart applies to each new, reconstructed, or existing affected source at your friction materials manufacturing facility.

(b) The affected source covered by this subpart is each new, reconstructed, or existing solvent mixer (as defined in § 63.9565) at your friction materials manufacturing facility.

(c) A solvent mixer at your friction materials manufacturing facility is new if you commence construction of the solvent mixer after October 18, 2002. An affected source is reconstructed if it meets the definition of

''reconstruction'' in § 63.2, and reconstruction is commenced after October 18, 2002.

(d) A solvent mixer at your friction materials manufacturing facility is existing if it is not new or reconstructed.

### § 63.9495 When do I have to comply with this subpart?

(a) If you have an existing solvent mixer, you must comply with each of the requirements for existing sources no later than October 18, 2005, except as otherwise specified at this section and §§ 63.9505, 63.9530, 63.9540, 63.9545, and Table 1 to this subpart.

(b) If you have a new or reconstructed solvent mixer for which construction or reconstruction commenced after October 18, 2002, but before May 4, 2018, you must comply with the requirements for new and reconstructed sources upon initial startup, except as otherwise specified at this section and §§ 63.9505, 63.9530, 63.9540, 63.9545, and Table 1 to this subpart.

(c) If your friction materials manufacturing facility is an area source that increases its emissions or its potential to emit such that it becomes a (or part of a) major source of HAP emissions, then paragraphs (c)(1) and (2) of this section apply.

(1) For any portion of the area source that becomes a new or reconstructed affected source, you must comply with the requirements for new and reconstructed sources upon startup or no later than October 18, 2002, whichever is later.

(2) For any portion of the area source that becomes an existing affected source, you must comply with the requirements for existing sources no later than 1 year after the area source becomes a major source or no later than October 18, 2005, whichever is later.

(d) You must meet the notification and schedule requirements in § 63.9535. Several of the notifications must be submitted before the compliance date for your affected source.

(e) Solvent mixers constructed or reconstructed after May 3, 2018, must be in compliance with this subpart at startup or by February 8, 2019, whichever is later.

[67 FR 64506, Oct. 18, 2002, as amended at 84 FR 2750, Feb. 8, 2019]

## EMISSION LIMITATIONS

### § 63.9500 What emission limitations must I meet?

(a) For each new, reconstructed, or existing large solvent mixer at your friction materials manufacturing facility, you must limit HAP solvent emissions to the atmosphere to no more than 30 percent of that which would otherwise be emitted in the absence of solvent recovery and/or solvent substitution, based on a 7-day block average.

(b) For each new, reconstructed, or existing small solvent mixer at your friction materials manufacturing facility, you must limit HAP solvent emissions to the atmosphere to no more than 15 percent of that which would otherwise be emitted in the absence of solvent recovery and/or solvent substitution, based on a 7-day block average.

## GENERAL COMPLIANCE REQUIREMENTS

### § 63.9505 What are my general requirements for complying with this subpart?

(a) Before August 7, 2019, for each existing source and each new or reconstructed source for which construction or reconstruction commenced after October 18, 2002, but before May 4, 2018, you must be in compliance with the emission limitations in this subpart at all times, except during periods of startup, shutdown, or malfunction. On and after August 7, 2019, for each such source you must be in compliance with the emission limitations in this subpart at all times. For new and reconstructed sources for which construction or reconstruction commenced after May 3, 2018, you must be in compliance with the emissions limitations in this subpart at all times.

(b) Before August 7, 2019, for each existing source, and for each new or reconstructed source for which construction or reconstruction commenced after October 18, 2002, but before May 4, 2018, you must always operate and

maintain your affected source, including air pollution control and monitoring equipment, according to the provisions in § 63.6(e)(1)(i). On and after August 7, 2019 for each such source, and after February 8, 2019 for new and reconstructed sources for which construction or reconstruction commenced after May 3, 2018, at all times you must operate and maintain any affected source, including associated air pollution control equipment and monitoring equipment, in a manner consistent with safety and good air pollution control practices for minimizing emissions. The general duty to minimize emissions does not require you to make any further efforts to reduce emissions if levels required by the applicable standard have been achieved. Determination of whether a source is operating in compliance with operation and maintenance requirements will be based on information available to the Administrator which may include, but is not limited to, monitoring results, review of operation and maintenance procedures, review of operation and maintenance records, and inspection of the source.

(c) Before August 7, 2019, for each existing source, and for each new or reconstructed source for which construction commenced after October 18, 2002, but before May 4, 2018, you must develop a written startup, shutdown, and malfunction plan according to the provisions in § 63.6(e)(3). For each such source, a startup, shutdown, and malfunction plan is not required on and after August 7, 2019. No startup, shutdown, and malfunction plan is required for any new or reconstructed source for which construction or reconstruction commenced after May 3, 2018.

[84 FR 2750, Feb. 8, 2019]

INITIAL COMPLIANCE DEMONSTRATION REQUIREMENTS

### § 63.9510 By what date must I conduct my initial compliance demonstration?

(a) If you use a solvent recovery system and/or solvent substitution, you must conduct your initial compliance demonstration within 7 calendar days after the compliance date that is specified for your source in § 63.9495.

(b) If you use a control technique other than a solvent recovery system and/or solvent substitution, you must comply with the provisions in § 63.9570.

### § 63.9515 How do I demonstrate initial compliance with the emission limitation that applies to me?

(a) You have demonstrated initial compliance for each new, reconstructed, or existing large solvent mixer subject to the emission limitation in § 63.9500(a) if the HAP solvent discharged to the atmosphere during the first 7 days after the compliance date, determined according to the provisions in § 63.9520, does not exceed a 7-day block average of 30 percent of that which would otherwise be emitted in the absence of solvent recovery and/or solvent substitution.

(b) You have demonstrated initial compliance for each new, reconstructed, or existing small solvent mixer subject to the emission limitation in § 63.9500(b) if the HAP solvent discharged to the atmosphere during the first 7 days after the compliance date, determined according to the provisions in § 63.9520, does not exceed a 7-day block average of 15 percent of that which would otherwise be emitted in the absence of solvent recovery and/or solvent substitution.

(c) You must submit a notification of compliance status containing the results of the initial compliance demonstration according to § 63.9535(e).

### § 63.9520 What procedures must I use to demonstrate initial compliance?

(a) If you use a solvent recovery system, you must use the procedures in paragraphs (a)(1) through (8) of this section to demonstrate initial compliance with the emission limitations in § 63.9500(a) and (b).

(1) Record the date and time of each mix batch.

(2) Record the identity of each mix batch using a unique batch ID, as defined in § 63.9565.

(3) Measure and record the weight of HAP solvent loaded into the solvent mixer for each mix batch.

(4) Measure and record the weight of HAP solvent recovered for each mix batch.

(5) If you use a solvent recovery system, you must determine the percent of HAP solvent discharged to the atmosphere for each mix batch according to Equation 1 of this section as follows:

(Eq. 1)

$$P_b = \left(1 - \frac{S_{rec}}{S_{mix}}\right)(100) \qquad \text{(Eq. 1)}$$

Where:

$P_b$ = Percent of HAP solvent discharged to the atmosphere for each mix batch, percent;

$S_{rec}$ = Weight of HAP solvent recovered for each mix batch, lb;

$S_{mix}$ = Weight of HAP solvent loaded into the solvent mixer for each mix batch, lb.

(6) If you use solvent substitution for a mix batch, you must record the use of a non-HAP material as a substitute for a HAP solvent for that mix batch and assign a value of 0 percent to the percent of HAP solvent discharged to the atmosphere for that mix batch (Pb).

(7) Determine the 7-day block average percent of HAP solvent discharged to the atmosphere according to Equation 2 of this section as follows:

$$P_7 = \frac{1}{n}\sum_{i=1}^{n} P_b \qquad \text{(Eq. 2)}$$

Where:

$\%P_7$ = 7-day block average percent of HAP solvent discharged to the atmosphere, percent;

i = mix batch;

n = number of mix batches in 7-day block average.

(8) Have valid data for at least 90 percent of the mix batches over the 7-day averaging period.

(b) If you use a control technique other than a solvent recovery system and/or solvent substitution, you may apply to EPA for approval to use an alternative method of demonstrating compliance with the emission limitations for solvent mixers in § 63.9500(a) and (b), as provided in § 63.9570.

### § 63.9525 What are the installation, operation, and maintenance requirements for my weight measurement device?

(a) If you use a solvent recovery system, you must install, operate, and maintain a weight measurement device to measure the weight of HAP solvent loaded into the solvent mixer and the weight of HAP solvent recovered for each mix batch.

(b) For each weight measurement device required by this section, you must develop and submit for approval a site-specific monitoring plan that addresses the requirements of paragraphs (b)(1) through (6) of this section:

(1) Procedures for installing the weight measurement device;

(2) The minimum accuracy of the weight measurement device in pounds and as a percent of the average weight of solvent to be loaded into the solvent mixer;

(3) Site-specific procedures for how the measurements will be made;

(4) How the measurement data will be recorded, reduced, and stored;

(5) Procedures and acceptance criteria for calibration of the weight measurement device; and

(6) How the measurement device will be maintained, including a routine maintenance schedule and spare parts inventory list.

(c) The site-specific monitoring plan required in paragraph (b) of this section must include, at a minimum, the requirements of paragraphs (c)(1) through (3) of this section:

(1) The weight measurement device must have a minimum accuracy of ±0.05 kilograms (±0.1 pounds) or ±1 percent of the average weight of solvent to be loaded into the solvent mixer, whichever is greater.

(2) An initial multi-point calibration of the weight measurement device must be made using 5 points spanning the expected range of weight measurements before the weight measurement device can be used. The manufacturer's calibration results can be used to meet this requirement.

(3) Once per day, an accuracy audit must be made using a single Class F calibration weight that corresponds to 20 to 80 percent of the average weight of solvent to be loaded into the solvent mixer. If the weight measurement device cannot reproduce the value of the calibration weight within ±0.05 kilograms (0.1 pounds) or ±1 percent of the average weight of solvent to be loaded into the solvent mixer, whichever is

greater, the scale must be recalibrated before being used again. The recalibration must be performed with at least five Class F calibration weights spanning the expected range of weight measurements.

(d) You must operate and maintain the weight measurement device according to the site-specific monitoring plan.

(e) You must maintain records of all maintenance activities, calibrations, and calibration audits.

CONTINUOUS COMPLIANCE REQUIREMENTS

### § 63.9530 How do I demonstrate continuous compliance with the emission limitation that applies to me?

(a) If you use a solvent recovery system and/or solvent substitution, you must demonstrate continuous compliance with the emission limitations for solvent mixers in § 63.9500(a) and (b) according to the provisions in paragraphs (a)(1) through (3) of this section.

(1) For existing sources and for new or reconstructed sources for which construction or reconstruction commenced after October 18, 2002, but before May 4, 2018, before August 7, 2019, except for during malfunctions of your weight measurement device and associated repairs, you must collect and record the information required in § 63.9520(a)(1) through (8) at all times that the affected source is operating and record all information needed to document conformance with these requirements. On and after August 7, 2019 for such sources, and after February 8, 2019 for new or reconstructed sources that commenced construction after May 3, 2018, you must collect and record the information required in § 63.9520(a)(1) through (8) at all times that the affected source is operating and record all information needed to document conformance with these requirements.

(2) For new, reconstructed, or existing large solvent mixers, maintain the 7-day block average percent of HAP solvent discharged to the atmosphere at or below 30 percent of that which would otherwise be emitted in the absence of solvent recovery and/or solvent substitution.

(3) For new, reconstructed, or existing small solvent mixers, maintain the 7-day block average percent of HAP solvent discharged to the atmosphere at or below 15 percent of that which would otherwise be emitted in the absence of solvent recovery and/or solvent substitution.

(b) If you use a control technique other than a solvent recovery system and/or solvent substitution, you must demonstrate continuous compliance with the emission limitations for solvent mixers in § 63.9500(a) and (b) according to the provisions in § 63.9570.

(c) You must report each instance in which you did not meet the emission limitations for solvent mixers in § 63.9500(a) and (b). This includes periods of startup, shutdown, or malfunction. These instances are deviations from the emission limitations in this subpart. These deviations must be reported according to the requirements in § 63.9540.

(d) [Reserved]

(e) For existing sources and for new or reconstructed sources which commenced construction or reconstruction after October 18, 2002, but before May 4, 2018, before August 7, 2019, consistent with §§ 63.6(e) and 63.7(e)(1), deviations that occur during a period of startup, shutdown, or malfunction are not violations if you demonstrate to the Administrator's satisfaction that you were operating in accordance with § 63.6(e)(1). The Administrator will determine whether deviations that occur during a period of startup, shutdown, or malfunction are violations, according to the provisions in § 63.6(e). On and after August 7, 2019 for such sources, and after February 8, 2019 for new or reconstructed sources which commence construction or reconstruction after May 3, 2018, all deviations are considered violations.

[67 FR 64506, Oct. 18, 2002, as amended at 71 FR 20470, Apr. 20, 2006; 84 FR 2751, Feb. 8, 2019]

NOTIFICATIONS, REPORTS, AND RECORDS

### § 63.9535 What notifications must I submit and when?

(a) You must submit all of the notifications in §§ 63.8(f)(4) and 63.9(b), (c), (d), and (h) that apply to you by the specified dates.

(b) If you use a control technique other than a solvent recovery system

and/or solvent substitution, you must comply with the provisions in § 63.9570.

(c) As specified in § 63.9(b)(2), if you start up your affected source before October 18, 2002, you must submit your initial notification no later than 120 calendar days after October 18, 2002, or no later than 120 days after the source becomes subject to this subpart, whichever is later.

(d) As specified in § 63.9(b)(3), if you start up your new affected source on or after October 18, 2002, you must submit your initial notification no later than 120 calendar days after you become subject to this subpart.

(e) You must submit a notification of compliance status according to § 63.9(h)(2)(ii). You must submit the notification of compliance status before the close of business on the 30th calendar day following the completion of the initial compliance demonstration.

[67 FR 64506, Oct. 18, 2002, as amended at 85 FR 73917, Nov. 19, 2020]

### § 63.9540 What reports must I submit and when?

(a) Unless the Administrator has approved a different schedule, you must submit each semiannual compliance report according to the requirements in paragraphs (a)(1) through (5) of this section.

(1) The first compliance report must cover the period beginning on the compliance date that is specified for your affected source in § 63.9495 and ending on June 30 or December 31, whichever date comes first after the compliance date that is specified for your source in § 63.9495.

(2) The first compliance report must be postmarked or delivered no later than July 31 or January 31, whichever date comes first after your first compliance report is due.

(3) Each subsequent compliance report must cover the semiannual reporting period from January 1 through June 30 or the semiannual reporting period from July 1 through December 31.

(4) Each subsequent compliance report must be postmarked or delivered no later than July 31 or January 31, whichever date comes first after the end of the semiannual reporting period.

(5) For each affected source that is subject to permitting regulations pursuant to 40 CFR part 70 or 71 of this chapter, and if the permitting authority has established dates for submitting semiannual reports pursuant to 40 CFR 70.6(a)(3)(iii)(A) or 40 CFR 71.6(a)(3)(iii)(A) of this chapter, you may submit the first and subsequent compliance reports according to the dates the permitting authority has established instead of according to the dates in paragraphs (a)(1) through (4) of this section.

(b) Each compliance report must include the information in paragraphs (b)(1) through (3) of this section, and if applicable, paragraphs (b)(4) through (6) of this section.

(1) Company name and address.

(2) Statement by a responsible official, with the official's name, title, and signature, certifying that, based on information and belief formed after reasonable inquiry, the statements and information in the report are true, accurate, and complete.

(3) Date of report and beginning and ending dates of the reporting period.

(4) For existing sources and for new or reconstructed sources for which construction or reconstruction commenced after October 18, 2002, but before May 4, 2018, before August 7, 2019, if you had a startup, shutdown, or malfunction during the reporting period and you took actions consistent with your startup, shutdown, and malfunction plan, the compliance report must include the information in § 63.10(d)(5)(i). A startup, shutdown, and malfunction plan is not required for such sources on and after August 7, 2019.

(5) If there were no deviations from the emission limitations for solvent mixers in § 63.9500(a) and (b), a statement that there were no deviations from the emission limitations during the reporting period.

(6) If there were no periods during which a monitoring system was out-of-control as specified in § 63.8(c)(7), a statement that there were no periods during which a monitoring system was out-of-control during the reporting period.

(c) For each deviation from an emission limitation occurring at an affected source, you must include the information in paragraphs (b)(1) through (4) and (c)(1) and (2) of this section. This includes periods of startup, shutdown, or malfunction.

(1) The total operating time of each affected source during the reporting period.

(2) For existing sources and for new or reconstructed sources which commenced construction or reconstruction after October 18, 2002, but before May 4, 2018, before August 7, 2019, information on the number, duration, and cause of deviations (including unknown cause, if applicable), as applicable, and the corrective action taken. On and after August 7, 2019 for such sources, and after February 8, 2019 for new or reconstructed sources which commenced construction or reconstruction after May 3, 2018, information on the number of deviations to meet an emission limitation. For each instance, include the date, time, duration, and cause of deviations (including unknown cause, if applicable), as applicable, a list of the affected source or equipment, an estimate of the quantity of each regulated pollutant emitted over any emission limit, and a description of the method used to estimate the emissions, and the corrective action taken.

(d) For existing sources and for new or reconstructed sources which commenced construction or reconstruction after October 18, 2002, but before May 4, 2018, before August 7, 2019, if you had a startup, shutdown, or malfunction during the semiannual reporting period that was not consistent with your startup, shutdown, and malfunction plan, you must submit an immediate startup, shutdown, and malfunction report according to the requirements in § 63.10(d)(5)(ii). An immediate startup, shutdown, and malfunction report is not required for such sources on and after August 7, 2019.

(e) If you have obtained a title V operating permit for an affected source pursuant to 40 CFR part 70 or 71 of this chapter, you must report all deviations as defined in this subpart in the semiannual monitoring report required by 40 CFR 70.6(a)(3)(iii)(A) or 40 CFR 71.6(a)(3)(iii)(A) of this chapter. If you submit a compliance report for an affected source along with, or as part of, the semiannual monitoring report required by 40 CFR 70.6(a)(3)(iii)(A) or 40 CFR 71.6(a)(3)(iii)(A) of this chapter, and the compliance report includes all the required information concerning deviations from any emission limitation in this subpart, then submission of the compliance report satisfies any obligation to report the same deviations in the semiannual monitoring report. However, submission of a compliance report does not otherwise affect any obligation you may have to report deviations from permit requirements to your permitting authority.

[67 FR 64506, Oct. 18, 2002, as amended at 84 FR 2751, Feb. 8, 2019]

### § 63.9545 What records must I keep?

(a) You must keep the records in paragraphs (a)(1) and (2) of this section that apply to you.

(1) A copy of each notification and report that you submitted to comply with this subpart, including all documentation supporting any initial notification or notification of compliance status that you submitted, according to the requirements in § 63.10(b)(2)(xiv).

(2) For existing sources and for new or reconstructed sources which commenced construction or reconstruction after October 18, 2002, but before May 4, 2018, before August 7, 2019, the records in § 63.6(e)(3)(iii) through (v) related to startup, shutdown, or malfunction. For such sources, it is not required to keep records in § 63.6(e)(3)(iii) through (v) related to startup, shutdown, or malfunction on and after August 7, 2019.

(3) After February 8, 2019 for new or reconstructed sources which commenced construction or reconstruction after May 3, 2018, and on and after August 7, 2019 for all other affected sources, in the event that an affected unit fails to meet an applicable standard, record the number of deviations. For each deviation, record the date, time and duration of each deviation.

(i) For each deviation, record and retain cause of deviations (including unknown cause, if applicable), a list of the affected source or equipment, an

estimate of the quantity of each regulated pollutant emitted over any emission limit, and a description of the method used to estimate the emissions.

(ii) Record actions taken to minimize emissions in accordance with § 63.9505, and any corrective actions taken to return the affected unit to its normal or usual manner of operation.

(b) You must keep the records required in § 63.9525 to show proper operation and maintenance of the weight measurement device.

(c) You must keep the records required in § 63.9530 to show continuous compliance with the emission limitations for solvent mixers in § 63.9500(a) and (b).

[67 FR 64506, Oct. 18, 2002, as amended at 84 FR 2751, Feb. 8, 2019]

### § 63.9550 In what form and how long must I keep my records?

(a) You must keep your records in a form suitable and readily available for expeditious review, according to § 63.10(b)(1).

(b) As specified in § 63.10(b)(1), you must keep each record for 5 years following the date of each occurrence, measurement, maintenance, corrective action, report, or record.

(c) You must keep each record on site for at least 2 years after the date of each occurrence, measurement, maintenance, corrective action, report, or record, according to § 63.10(b)(1). You can keep the records offsite for the remaining 3 years.

## OTHER REQUIREMENTS AND INFORMATION

### § 63.9555 What parts of the General Provisions apply to me?

Table 1 to this subpart shows which parts of the General Provisions in §§ 63.1 through 63.15 apply to you.

### § 63.9560 Who implements and enforces this subpart?

(a) This subpart can be implemented and enforced by the U.S. EPA, or a delegated authority such as your State, local, or tribal agency. If the U.S. EPA Administrator has delegated authority to your State, local, or tribal agency, then that agency, in addition to the U.S. EPA, has the authority to implement and enforce this subpart. You should contact your U.S. EPA Regional Office to find out if this subpart is delegated to your State, local, or tribal agency.

(b) In delegating implementation and enforcement authority of this subpart to a State, local, or tribal agency under 40 CFR part 63, subpart E, the authorities contained in paragraphs (c)(1) through (4) of this section are retained by the Administrator of the U.S. EPA and are not transferred to the State, local, or tribal agency.

(c) The authorities that cannot be delegated to State, local or tribal agencies are as follows:

(1) Approval of alternatives to the emission limitations in § 63.9500(a) and (b) under § 63.6(g).

(2) Approval of major alternatives to test methods under § 63.7(e)(2)(ii) and (f) and as defined in § 63.90.

(3) Approval of major alternatives to monitoring under § 63.8(f) and as defined in § 63.90.

(4) Approval of major alternatives to recordkeeping and reporting under § 63.10(f) and as defined in § 63.90.

### § 63.9565 What definitions apply to this subpart?

Terms used in this subpart are defined in the Clean Air Act, in § 63.2, and in this section as follows:

*Batch ID* means a unique identifier used to differentiate each individual mix batch.

*Deviation* means any instance in which an affected source subject to this subpart, or an owner or operator of such a source:

(1) Fails to meet any requirement or obligation established by this subpart, including, but not limited to, any emission limitation (including any operating limit);

(2) Fails to meet any term or condition that is adopted to implement an applicable requirement in this subpart and that is included in the operating permit for any affected source required to obtain such a permit; or

(3) Fails to meet any emission limitation (including any operating limit) in this subpart during startup, shutdown, or malfunction, regardless of whether or not such failure is permitted by this subpart.

*Friction ingredients* means any of the components used in the manufacture of friction materials, excluding the HAP solvent. Friction ingredients include, but are not limited to, reinforcement materials, property modifiers, resins, and other additives.

*Friction materials manufacturing facility* means a facility that manufactures friction materials using a solvent-based process. Friction materials are used in the manufacture of products used to accelerate or decelerate objects. Products that use friction materials include, but are not limited to, disc brake pucks, disc brake pads, brake linings, brake shoes, brake segments, brake blocks, brake discs, clutch facings, and clutches.

*HAP solvent* means a solvent that contains 10 percent or more of any one HAP, as listed in section 112(b) of the Clean Air Act, or any combination of HAP that is added to a solvent mixer. Examples include hexane, toluene, and trichloroethylene.

*Initial startup* means the first time that equipment is put into operation. Initial startup does not include operation solely for testing equipment. Initial startup does not include subsequent startups (as defined in this section) following malfunction or shutdowns or following changes in product or between batch operations.

*Large solvent mixer* means a solvent mixer with a design capacity greater than or equal to 2,000 pounds, including friction ingredients and HAP solvent.

*Mix batch* means each batch of friction materials manufactured in a solvent mixer.

*Responsible official* means responsible official as defined in § 63.2.

*7-day block average* means an averaging technique for a weekly compliance determination where the calculated values for percent HAP solvent discharged to the atmosphere are averaged together for all mix batches (for which there are valid data) in a 7-day block period according to the equation provided in § 63.9520(a)(6).

*Small solvent mixer* means a solvent mixer with a design capacity less than 2,000 pounds, including friction ingredients and HAP solvent.

*Solvent mixer* means a mixer used in the friction materials manufacturing process in which HAP solvent is used as one of the ingredients in at least one batch during a semiannual reporting period. Trace amounts of HAP solvents in resins or other friction ingredients do not qualify mixers as solvent mixers.

*Solvent recovery system* means equipment used for the purpose of recovering the HAP solvent from the exhaust stream. An example of a solvent recovery system is a condenser.

*Solvent substitution* means substitution of a non-HAP material for a HAP solvent.

*Startup* means bringing equipment online and starting the production process.

*Startup, shutdown, and malfunction plan* means a plan developed according to the provisions of § 63.6(e)(3).

### § 63.9570 How do I apply for alternative compliance requirements?

(a) If you use a control technique other than a solvent recovery system and/or solvent substitution, you may request approval to use an alternative method of demonstrating compliance with the emission limitations in § 63.9500(a) and (b) according to the procedures in this section.

(b) You can request approval to use an alternative method of demonstrating compliance in the initial notification for existing sources, the notification of construction or reconstruction for new sources, or at any time.

(c) You must submit a description of the proposed testing, monitoring, recordkeeping, and reporting that will be used and the proposed basis for demonstrating compliance.

(1) If you have not previously performed testing, you must submit a proposed test plan. If you are seeking permission to use an alternative method of compliance based on previously performed testing, you must submit the results of testing, a description of the procedures followed in testing, and a description of pertinent conditions during testing.

(2) You must submit a monitoring plan that includes a description of the control technique, test results

verifying the performance of the control technique, the appropriate operating parameters that will be monitored, and the frequency of measuring and recording to establish continuous compliance with the emission limitations in § 63.9500(a) and (b). You must also include the proposed performance specifications and quality assurance procedures for the monitors. The monitoring plan is subject to the Administrator's approval. You must install, calibrate, operate, and maintain the monitors in accordance with the monitoring plan approved by the Administrator.

(d) Use of the alternative method of demonstrating compliance must not begin until approval is granted by the Administrator.

**§§ 63.9571–63.9579 [Reserved]**

TABLE 1 TO SUBPART QQQQQ OF PART 63—APPLICABILITY OF GENERAL PROVISIONS TO SUBPART QQQQQ

As required in § 63.9505, you must comply with each applicable General Provisions requirement according to the following table:

| Citation | Subject | Applies to subpart QQQQQ? | Explanation |
|---|---|---|---|
| § 63.1 | Applicability | Yes. | |
| § 63.2 | Definitions | Yes. | |
| § 63.3 | Units and Abbreviations | Yes. | |
| § 63.4 | Prohibited Activities | Yes. | |
| § 63.5 | Construction/Reconstruction | Yes. | |
| § 63.6(a)–(c), (i)–(j) | Compliance with Standards and Maintenance Requirements. | Yes. | |
| § 63.6(d) | [Reserved]. | | |
| § 63.6(e)(1)(i)–(ii) | SSM Operation and Maintenance Requirements. | No, for new or reconstructed sources which commenced construction or reconstruction after May 3, 2018. Yes, for all other affected sources before August 7, 2019, and No thereafter. | Subpart QQQQQ requires affected units to meet emissions standards at all times. See § 63.9505 for general duty requirement. |
| § 63.6(e)(1)(iii), (e)(2) | Operation and Maintenance | Yes. | |
| § 63.6(e)(3) | SSM Plan Requirements | No, for new or reconstructed sources which commenced construction or reconstruction after May 3, 2018. Yes, for all other affected sources before August 7, 2019, and No thereafter. | Subpart QQQQQ requires affected units to meet emissions standards at all times. |
| § 63.6(f)(1) | SSM Exemption | No, for new or reconstructed sources which commenced construction or reconstruction after May 3, 2018. Yes, for all other affected sources before August 7, 2019, and No thereafter. | Subpart QQQQQ requires affected units to meet emissions standards at all times. |
| § 63.6(f)(2)–(3) | Compliance with Nonopacity Emission Standards. | Yes. | |
| § 63.6(g) | Use of an Alternative Nonopacity Emission Standard. | No | Subpart QQQQQ contains no work practice standards. |
| § 63.6(h) | Compliance with Opacity and Visible Emission Standards. | No | Subpart QQQQQ contains no opacity or VE limits. |
| § 63.7(a)(1)–(2) | Applicability and Performance Test Dates. | No | Subpart QQQQQ includes dates for initial compliance demonstrations. |
| § 63.7(a)(3), (b)–(h) | Performance Testing Requirements | No | Subpart QQQQQ does not require performance tests. |

| Citation | Subject | Applies to subpart QQQQQ? | Explanation |
|---|---|---|---|
| § 63.8(a)(1)–(2) | Applicability and Relevant Standards for CMS. | Yes. | |
| § 63.8(a)(3) | [Reserved]. | | |
| § 63.8(a)(4) | Additional Monitoring Requirements for Control Devices in § 63.11. | No | Subpart QQQQQ does not require flares. |
| § 63.8(b) | Conduct of Monitoring | Yes. | |
| § 63.8(c)(1)(i), (iii) | Continuous Monitoring System (CMS) SSM Requirements. | No, for new or reconstructed sources which commenced construction or reconstruction after May 3, 2018. Yes, for all other affected sources before August 7, 2019, and No thereafter.. | |
| § 63.8(c)(1)(ii), (c)(2), (c)(3). | CMS Repairs, Operating Parameters, and Performance Tests. | Yes. | |
| § 63.8(c)(4) | Continuous Monitoring System (CMS) Requirements. | No | Subpart QQQQQ does not require CMS. |
| § 63.8(c)(5) | Continuous Opacity Monitoring System (COMS) Minimum Procedures. | No | Subpart QQQQQ does not require COMS. |
| § 63.8(c)(6) | Zero and High Level Calibration Check Requirements. | No | Subpart QQQQQ specifies calibration requirements. |
| § 63.8(c)(7)–(8) | Out-of-Control Periods | No | Subpart QQQQQ specifies out-of-control periods and reporting requirements. |
| § 63.8(d) | CMS Quality Control | No | Subpart QQQQQ requires a monitoring plan that specifies CMS quality control procedures. |
| § 63.8(e) | CMS Performance Evaluation | No | Subpart QQQQQ does not require CMS performance evaluations. |
| § 63.8(f)(1)–(5) | Alternative Monitoring Procedure | Yes. | |
| § 63.8(f)(6) | Relative Accuracy Test Audit (RATA) Alternative. | No | Subpart QQQQQ does not require continuous emissions monitoring systems (CEMS). |
| § 63.8(g)(1)–(5) | Data Reduction | No | Subpart QQQQQ specifies data reduction requirements. |
| § 63.9(a)–(d), (h)–(j) | Notification Requirements | Yes | Except that subpart QQQQQ does not require performance tests or CMS performance evaluations. |
| § 63.9(e) | Notification of Performance Test | No | Subpart QQQQQ does not require performance tests. |
| § 63.9(f) | Notification of VE/Opacity Test | No | Subpart QQQQQ contains no opacity or VE limits. |
| § 63.9(g) | Additional Notifications When Using CMS. | No | Subpart QQQQQ does not require CMS performance evaluations. |
| § 63.9(k) | Electronic reporting procedures | Yes | Only as specified in § 63.9(j). |
| § 63.10(a), (b)(1), (d)(1), (d)(4), (e)(3), (f). | Recordkeeping and Reporting Requirements. | Yes. | |
| § 63.10(b)(2)(i), (ii), (iv), (v). | Recordkeeping for Startup, Shutdown and Malfunction. | No, for new or reconstructed sources which commenced construction or reconstruction after May 3, 2018. Yes, for all other affected sources before August 7, 2019, and No thereafter. | See § 63.9545 for recordkeeping requirements. |
| § 63.10(b)(2)(iii), (vi)–(xiv). | Owner/Operator Recordkeeping Requirements. | Yes. | |
| § 63.10(c)(1)–(6), (9)–(15). | Additional Records for CMS | No | Subpart QQQQQ specifies record requirements. |
| § 63.10(c)(7)–(8) | Records of Excess Emissions and Parameter Monitoring Exceedances for CMS. | No | Subpart QQQQQ specifies record requirements. |
| § 63.10(d)(2) | Reporting Results of Performance Tests. | No | Subpart QQQQQ does not require performance tests. |
| § 63.10(d)(3) | Reporting Opacity or VE Observations. | No | Subpart QQQQQ contains no opacity or VE limits. |

| Citation | Subject | Applies to subpart QQQQQ? | Explanation |
|---|---|---|---|
| § 63.10(d)(5) | SSM reports | No, for new or reconstructed sources which commenced construction or reconstruction after May 3, 2018. Yes, for all other affected sources before August 7, 2019, and No thereafter. | See § 63.9540 for malfunction reporting requirements. |
| § 63.10(e)(1)–(2) | Additional CMS Reports | No | Subpart QQQQQ does not require CMS. |
| § 63.10(e)(4) | Reporting COMS Data | No | Subpart QQQQQ does not require COMS. |
| § 63.11 | Control Device Requirements | No | Subpart QQQQQ does not require flares. |
| §§ 63.12–63.15 | Delegation, Addresses, Incorporation by Reference Availability of Information. | Yes. | |

[67 FR 64506, Oct. 18, 2002, as amended at 84 FR 2752, Feb. 8, 2019; 85 FR 73917, Nov. 19, 2020]

## Subpart RRRRR—National Emission Standards for Hazardous Air Pollutants: Taconite Iron Ore Processing

SOURCE: 68 FR 61888, Oct. 30, 2003, unless otherwise noted.

WHAT THIS SUBPART COVERS

### § 63.9580 What is the purpose of this subpart?

This subpart establishes national emission standards for hazardous air pollutants (NESHAP) for taconite iron ore processing. This subpart also establishes requirements to demonstrate initial and continuous compliance with all applicable emission limitations (emission limits and operating limits), work practice standards, and operation and maintenance requirements in this subpart.

### § 63.9581 Am I subject to this subpart?

You are subject to this subpart if you own or operate a taconite iron ore processing plant that is (or is part of) a major source of hazardous air pollutant (HAP) emissions. Your taconite iron ore processing plant is a major source of HAP if it emits or has the potential to emit any single HAP at a rate of 10 tons or more per year or any combination of HAP at a rate of 25 tons or more per year.

[85 FR 73917, Nov. 19, 2020]

### § 63.9582 What parts of my plant does this subpart cover?

(a) This subpart applies to each new and existing affected source at your taconite iron ore processing plant.

(b) The affected sources are each new or existing ore crushing and handling operation, ore dryer, indurating furnace, and finished pellet handling operation at your taconite iron ore processing plant, as defined in § 63.9652.

(c) This subpart covers emissions from ore crushing and handling emission units, ore dryer stacks, indurating furnace stacks, finished pellet handling emission units, and fugitive dust emissions.

(d) An ore crushing and handling operation, ore dryer, indurating furnace, or finished pellet handling operation at your taconite iron ore processing plant is existing if you commenced construction or reconstruction of the affected source before December 18, 2002.

(e) An ore crushing and handling operation, ore dryer, indurating furnace, or finished pellet handling operation at your taconite iron ore processing plant is new if you commence construction or reconstruction of the affected source on or after December 18, 2002. An affected source is reconstructed if it meets the definition of reconstruction in § 63.2.

### § 63.9583 When do I have to comply with this subpart?

(a) If you have an existing affected source, you must comply with each emission limitation, work practice standard, and operation and maintenance requirement in this subpart that applies to you no later than October 30, 2006.

(b) If you have a new affected source and its initial startup date is on or before October 30, 2003, you must comply with each emission limitation, work practice standard, and operation and maintenance requirement in this subpart that applies to you by October 30, 2003.

(c) If you have a new affected source and its initial startup date is after October 30, 2003, you must comply with each emission limitation, work practice standard, and operation and maintenance requirement in this subpart that applies to you upon initial startup.

(d) If your taconite iron ore processing plant is an area source that becomes a major source of HAP, the compliance dates in paragraphs (d)(1) and (2) of this section apply to you.

(1) Any portion of the taconite iron ore processing plant that is a new affected source or a new reconstructed source must be in compliance with this subpart upon startup.

(2) All other parts of the taconite iron ore processing plant must be in compliance with this subpart no later than 3 years after the plant becomes a major source.

(e) You must meet the notification and schedule requirements in § 63.9640. Several of these notifications must be submitted before the compliance date for your affected source.

## EMISSION LIMITATIONS AND WORK PRACTICE STANDARDS

### § 63.9590 What emission limitations must I meet?

(a) You must meet each emission limit in Table 1 to this subpart that applies to you.

(b) You must meet each operating limit for control devices in paragraphs (b)(1) through (5) of this section that applies to you.

(1) Except as provided in paragraph (b)(2) of this section, for each wet scrubber applied to meet any particulate matter emission limit in Table 1 to this subpart, you must maintain the daily average pressure drop and daily average scrubber water flow rate at or above the minimum levels established during the initial performance test.

(2) On or before January 28, 2022, for affected sources that commenced construction or reconstruction on or before September 25, 2019, for each dynamic wet scrubber applied to meet any particulate matter emission limit in Table 1 to this subpart, you must maintain the daily average scrubber water flow rate and either the daily average fan amperage (a surrogate for fan speed as revolutions per minute) or the daily average pressure drop at or above the minimum levels established during the initial performance test. After January 28, 2022, for affected sources that commenced construction or reconstruction on or before September 25, 2019, and after July 28, 2020, or upon start-up, which ever date is later, for affected sources that commenced construction or reconstruction after September 25, 2019, for each dynamic wet scrubber applied to meet any particulate matter emission limit in Table 1 to this subpart, you must maintain the daily average scrubber water flow rate and the daily average fan amperage (a surrogate for fan speed as revolutions per minute) at or above the minimum levels established during the initial performance test.

(3) For each dry electrostatic precipitator applied to meet any particulate matter emission limit in Table 1 to this subpart, you must meet the operating limits in paragraph (b)(3)(i) or (ii) of this section.

(i) Maintain the 6-minute average opacity of emissions exiting the control device stack at or below the level established during the initial performance test.

(ii) Maintain the daily average secondary voltage and daily average secondary current for each field at or above the minimum levels established during the initial performance test.

(4) For each wet electrostatic precipitator applied to meet any particulate matter emission limit in Table 1 to

this subpart, you must meet the operating limits in paragraphs (b)(4)(i) through (iii) of this section.

(i) Maintain the daily average secondary voltage for each field at or above the minimum levels established during the initial performance test.

(ii) Maintain the daily average stack outlet temperature at or below the maximum levels established during the initial performance test.

(iii) Maintain the daily average water flow rate at or above the minimum levels established during the initial performance test.

(5) If you use any air pollution control device other than a baghouse, wet scrubber, dynamic scrubber, dry electrostatic precipitator, or wet electrostatic precipitator, you must submit a site-specific monitoring plan in accordance with § 63.9631(f).

(c) You may petition the Administrator for approval of alternatives to the monitoring requirements in paragraphs (b)(1) through (4) of this section as allowed under § 63.8(f) and as defined in § 63.90.

[68 FR 61888, Oct. 30, 2003, as amended at 85 FR 45492, July 28, 2020]

### § 63.9591 What work practice standards must I meet?

(a) You must prepare, and at all times operate according to, a fugitive dust emissions control plan that describes in detail the measures that will be put in place to control fugitive dust emissions from the locations listed in paragraphs (a)(1) through (6) of this section.

(1) Stockpiles (includes, but is not limited to, stockpiles of uncrushed ore, crushed ore, or finished pellets);

(2) Material transfer points;

(3) Plant roadways;

(4) Tailings basin;

(5) Pellet loading areas; and

(6) Yard areas.

(b) A copy of your fugitive dust emissions control plan must be submitted for approval to the Administrator on or before the applicable compliance date for the affected source as specified in § 63.9583. The requirement for the plant to operate according to the fugitive dust emissions control plan must be incorporated by reference in the operating permit for the plant that is issued by the designated permitting authority under 40 CFR part 70 or 40 CFR part 71.

(c) You can use an existing fugitive dust emissions control plan provided it meets the requirements in paragraphs (c)(1) through (3) of this section.

(1) The plan satisfies the requirements of paragraph (a) of this section.

(2) The plan describes the current measures to control fugitive dust emission sources.

(3) The plan has been approved as part of a State implementation plan or title V permit.

(d) You must maintain a current copy of the fugitive dust emissions control plan onsite, and it must be available for inspection upon request. You must keep the plan for the life of the affected source or until the affected source is no longer subject to the requirements of this subpart.

## Operation and Maintenance Requirements

### § 63.9600 What are my operation and maintenance requirements?

(a) On or before January 25, 2021, for affected sources that commenced construction or reconstruction on or before September 25, 2019, you must always operate and maintain your affected source, including air pollution control and monitoring equipment, according to the provisions in § 63.6(e)(1)(i). After January 25, 2021, for affected sources that commenced construction or reconstruction on or before September 25, 2019, and after July 28, 2020, or upon start-up, which ever date is later, for affected sources that commenced construction or reconstruction after September 25, 2019, at all times, you must always operate and maintain any affected source, including associated air pollution control equipment and monitoring equipment, in a manner consistent with safety and good air pollution control practices for minimizing emissions. The general duty to minimize emissions does not require the owner or operator to make any further efforts to reduce emissions if levels required by the applicable standard have been achieved. Determination of whether such operation and maintenance procedures are being

used will be based on information available to the Administrator which may include, but is not limited to, monitoring results, review of operation and maintenance procedures, review of operation and maintenance records, and inspection of the source.

(b) You must prepare, and at all times operate according to, a written operation and maintenance plan for each control device applied to meet any particulate matter emission limit in Table 1 to this subpart and to meet the requirement of each indurating furnace subject to good combustion practices (GCP). Each site-specific operation and maintenance plan must be submitted to the Administrator on or before the compliance date that is specified in §63.9583 for your affected source. The plan you submit must explain why the chosen practices (i.e., quantified objectives) are effective in performing corrective actions or GCP in minimizing the formation of formaldehyde (and other products of incomplete combustion). The Administrator will review the adequacy of the site-specific practices and objectives you will follow and the records you will keep to demonstrate compliance with your Plan. If the Administrator determines that any portion of your operation and maintenance plan is not adequate, we can reject those portions of the plan, and request that you provide additional information addressing the relevant issues. In the interim of this process, you will continue to follow your current site-specific practices and objectives, as submitted, until your revisions are accepted as adequate by the Administrator. You must maintain a current copy of the operation and maintenance plan onsite, and it must be available for inspection upon request. You must keep the plan for the life of the affected source or until the affected source is no longer subject to the requirements of this subpart. Each operation and maintenance plan must address the elements in paragraphs (b)(1) through (4) of this section.

(1) Preventative maintenance for each control device, including a preventative maintenance schedule that is consistent with the manufacturer's instructions for routine and long-term maintenance.

(2) Corrective action procedures for bag leak detection systems. On or before January 25, 2021, for affected sources that commenced construction or reconstruction on or before September 25, 2019, in the event a bag leak detection system alarm is triggered, you must initiate corrective action to determine the cause of the alarm within 1 hour of the alarm, initiate corrective action to correct the cause of the problem within 24 hours of the alarm, and complete the corrective action as soon as practicable. Corrective actions may include, but are not limited to, the actions listed in paragraphs (b)(2)(i) through (vi) of this section. After January 25, 2021, for affected sources that commenced construction or reconstruction on or before September 25, 2019, and after July 28, 2020, or upon start-up, which ever date is later, for affected sources that commenced construction or reconstruction after September 25, 2019, in the event a bag leak detection system alarm is triggered, you must initiate corrective action to determine the cause of the alarm within 1 hour of the alarm, initiate corrective action to correct the cause of the problem within 24 hours of the alarm, and complete the corrective action as soon as practicable. If the alarm sounds more than 5 percent of the operating time during a 6-month period as determined according to §63.9634(d)(3), it is considered an operating parameter deviation. Corrective actions may include, but are not limited to, the actions listed in paragraphs (b)(2)(i) through (vi) of this section.

(i) Inspecting the baghouse for air leaks, torn or broken bags or filter media, or any other condition that may cause an increase in emissions.

(ii) Sealing off defective bags or filter media.

(iii) Replacing defective bags or filter media or otherwise repairing the control device.

(iv) Sealing off a defective baghouse compartment.

(v) Cleaning the bag leak detection system probe, or otherwise repairing the bag leak detection system.

(vi) Adjusting the process operation producing the particulate emissions.

(3) Corrective action procedures for continuous parameter monitoring systems (CPMS) for all air pollution control devices except for baghouses. In the event you exceed an established operating limit for an air pollution control device except for a baghouse, you must initiate corrective action to determine the cause of the operating limit exceedance and complete the corrective action within 10 calendar days. The corrective action procedures you take must be consistent with the installation, operation, and maintenance procedures listed in your site-specific CPMS monitoring plan in accordance with § 63.9632(b).

(4) Good combustion practices for indurating furnaces. You must identify and implement a set of site-specific GCP for each type of indurating furnace at your plant. These GCP should correspond to your standard operating procedures for maintaining the proper and efficient combustion within each indurating furnace. Good combustion practices include, but are not limited to, the elements listed in paragraphs (b)(4)(i) through (v) of this section.

(i) Proper operating conditions for each indurating furnace (e.g., minimum combustion temperature, maximum carbon monoxide concentration in the furnace exhaust gases, burner alignment, or proper fuel-air distribution/mixing).

(ii) Routine inspection and preventative maintenance and corresponding schedules of each indurating furnace.

(iii) Performance analyses of each indurating furnace.

(iv) Keeping applicable operator logs.

(v) Keeping applicable records to document compliance with each element.

[68 FR 61888, Oct. 30, 2003, as amended at 85 FR 45492, July 28, 2020]

GENERAL COMPLIANCE REQUIREMENTS

### § 63.9610 What are my general requirements for complying with this subpart?

(a) On or before January 25, 2021, for affected sources that commenced construction or reconstruction on or before September 25, 2019, you must be in compliance with the requirements in paragraphs (a)(1) through (6) of this section at all times, except during periods of startup, shutdown, and malfunction. After January 25, 2021, for affected sources that commenced construction or reconstruction on or before September 25, 2019, and after July 28, 2020, for affected sources that commenced construction or reconstruction after September 25, 2019, you must be in compliance with the emission limitations, standards, and operation and maintenance requirements in this subpart at all times.

(1) The emission limitations in § 63.9590.

(2) The work practice standards in § 63.9591.

(3) The operation and maintenance requirements in § 63.9600.

(4) The notification requirements in § 63.9640.

(5) The reporting requirements in § 63.9641.

(6) The recordkeeping requirements in § 63.9642.

(b) During the period between the compliance date specified for your affected source in § 63.9583 and the date upon which continuous monitoring systems have been installed and certified and any applicable operating limits have been set, you must maintain a log detailing the operation and maintenance of the process and emissions control equipment. This includes the daily monitoring and recordkeeping of air pollution control device operating parameters as specified in § 63.9590(b).

(c) On or before January 25, 2021, for affected sources that commenced construction or reconstruction on or before September 25, 2019, you must develop a written startup, shutdown, and malfunction plan according to the provisions in § 63.6(e)(3). For affected sources, a startup, shutdown, and malfunction plan is not required after January 25, 2021. No startup, shutdown, and malfunction plan is required for affected sources that commenced construction or reconstruction after September 25, 2019.

[68 FR 61888, Oct. 30, 2003, as amended at 71 FR 20470, Apr. 20, 2006; 85 FR 45492, July 28, 2020]

INITIAL COMPLIANCE REQUIREMENTS

**§ 63.9620 On which units and by what date must I conduct performance tests or other initial compliance demonstrations?**

(a) For each ore crushing and handling affected source, you must demonstrate initial compliance with the emission limits in Table 1 to this subpart by conducting an initial performance test for particulate matter as specified in paragraphs (a)(1) and (2) of this section.

(1) Except as provided in paragraph (e) of this section, an initial performance test must be performed on all stacks associated with ore crushing and handling.

(2) Initial performance tests must be completed no later than 180 calendar days after the compliance date specified in § 63.9583. Performance tests conducted between October 30, 2003 and no later than 180 days after the corresponding compliance date can be used for initial compliance demonstration, provided the tests meet the initial performance testing requirements of this subpart.

(b) For each indurating furnace affected source, you must demonstrate initial compliance with the emission limits in Table 1 to this subpart by conducting an initial performance test for particulate matter as specified in paragraphs (b)(1) and (2) of this section.

(1) An initial performance test must be performed on all stacks associated with each indurating furnace.

(2) Initial performance tests must be completed no later than 180 calendar days after the compliance date specified in § 63.9583. Performance tests conducted between October 30, 2003 and no later than 180 days after the corresponding compliance date can be used for initial compliance demonstration, provided the tests meet the initial performance testing requirements of this subpart. For indurating furnaces with multiple stacks, the performance tests for all stacks must be completed within a reasonable period of time, such that the indurating furnace operating characteristics remain representative for the duration of the stack tests.

(c) For each finished pellet handling affected source, you must demonstrate initial compliance with the emission limits in Table 1 to this subpart by conducting an initial performance test for particulate matter as specified in paragraphs (c)(1) and (2) of this section.

(1) Except as provided in paragraph (e) of this section, an initial performance test must be performed on all stacks associated with finished pellet handling.

(2) Initial performance tests must be completed no later than 180 calendar days after the compliance date specified in § 63.9583. Performance tests conducted between October 30, 2003 and no later than 180 days after the corresponding compliance date can be used for initial compliance demonstration, provided the tests meet the initial compliance testing requirements of this subpart.

(d) For each ore dryer affected source, you must demonstrate initial compliance with the emission limits in Table 1 to this subpart by conducting an initial performance test for particulate matter as specified in paragraphs (d)(1) and (2) of this section.

(1) An initial performance test must be performed on all stacks associated with each ore dryer.

(2) Initial performance tests must be completed no later than 180 calendar days after the compliance date specified in § 63.9583. Performance tests conducted between October 30, 2003 and no later than 180 days after the corresponding compliance date can be used for initial compliance demonstration, provided the tests meet the initial compliance testing requirements of this subpart. For ore dryers with multiple stacks, the performance tests for all stacks must be completed within a reasonable period of time, such that the ore dryer operating characteristics remain representative for the duration of the stack tests.

(e) For ore crushing and handling affected sources and finished pellet handling affected sources, in lieu of conducting initial performance tests for particulate matter on all stacks, you may elect to group a maximum of six similar emission units together and conduct an initial compliance test on

one representative emission unit within each group of similar emission units. The determination of whether emission units are similar must meet the criteria in paragraph (f) of this section. If you decide to test representative emission units, you must prepare and submit a testing plan as described in paragraph (g) of this section.

(f) If you elect to test representative emission units as provided in paragraph (e) of this section, the units that are grouped together as similar units must meet the criteria in paragraphs (f)(1) and (2) of this section.

(1) All emission units within a group must be of the same process type (e.g., primary crushers, secondary crushers, tertiary crushers, fine crushers, ore conveyors, ore bins, ore screens, grate feed, pellet loadout, hearth layer, cooling stacks, pellet conveyor, and pellet screens). You cannot group emission units from different process types together for the purposes of this section.

(2) All emission units within a group must also have the same type of air pollution control device (e.g., wet scrubbers, dynamic wet scrubbers, rotoclones, multiclones, wet and dry electrostatic precipitators, and baghouses). You cannot group emission units with different air pollution control device types together for the purposes of this section.

(3) The site-specific operating limits established for the emission unit selected as representative of a group of similar emission units will be used as the operating limit for each emission unit within the group. The operating limit established for the representative unit must be met by each emission unit within the group.

(g) If you plan to conduct initial performance tests on representative emission units within an ore crushing and handling affected source or a finished pellet handling affected source, you must submit a testing plan for initial performance tests. This testing plan must be submitted to the Administrator or delegated authority no later than 90 days prior to the first scheduled initial performance test. The testing plan must contain the information specified in paragraphs (g)(1) through (3) of this section.

(1) A list of all emission units. This list must clearly identify all emission units that have been grouped together as similar emission units. Within each group of emission units, you must identify the emission unit that will be the representative unit for that group and subject to initial performance testing.

(2) A list of the process type and type of air pollution control device on each emission unit.

(3) A schedule indicating when you will conduct an initial performance test for particulate matter for each representative emission unit.

(h) For each work practice standard and operation and maintenance requirement that applies to you where initial compliance is not demonstrated using a performance test, you must demonstrate initial compliance within 30 calendar days after the compliance date that is specified for your affected source in § 63.9583.

(i) If you commenced construction or reconstruction of an affected source between December 18, 2002 and October 30, 2003 , you must demonstrate initial compliance with either the proposed emission limit or the promulgated emission limit no later than 180 calendar days after October 30, 2003 or no later than 180 calendar days after startup of the source, whichever is later, according to § 63.7(a)(2)(ix).

(j) If you commenced construction or reconstruction of an affected source between December 18, 2002 and October 30, 2003, and you chose to comply with the proposed emission limit when demonstrating initial compliance, you must conduct a second performance test to demonstrate compliance with the promulgated emission limit by 3 years and 180 calendar days after October 30, 2003, or after startup of the source, whichever is later, according to § 63.7(a)(2)(ix).

[68 FR 61888, Oct. 30, 2003, as amended at 85 FR 45492, July 28, 2020]

**§63.9621 What test methods and other procedures must I use to demonstrate initial compliance with the emission limits for particulate matter?**

(a) On or before January 25, 2021, for affected sources that commenced construction or reconstruction on or before September 25, 2019, you must conduct each performance test that applies to your affected source according to the requirements in §63.7(e)(1) and paragraphs (b) and (c) of this section. After January 25, 2021, for affected sources that commenced construction or reconstruction on or before September 25, 2019, and after July 28, 2020, or upon start-up, which ever date is later, for affected sources that commenced construction or reconstruction after September 25, 2019, you must conduct each performance test that applies to your affected source under normal operating conditions of the affected source. The owner or operator may not conduct performance tests during periods of malfunction. The owner or operator must record the process information that is necessary to document operating conditions during the test and include in such record an explanation to support that such conditions represent normal operation. Upon request, the owner or operator shall make available to the Administrator such records as may be necessary to determine the conditions of performance tests. You must also conduct each performance test that applies to your affected source according to the requirements in paragraphs (b) and (c) of this section.

(b) For each ore crushing and handling affected source and each finished pellet handling affected source, you must determine compliance with the applicable emission limit for particulate matter in Table 1 to this subpart by following the test methods and procedures in paragraphs (b)(1) through (3) of this section.

(1) Except as provided in §63.9620(e), determine the concentration of particulate matter in the stack gas for each emission unit according to the test methods listed in paragraphs (b)(1)(i) through (v) of this section.

(i) EPA Method 1 or 1A in appendix A–1 to part 60 of this chapter to select sampling port locations and the number of traverse points. Sampling ports must be located at the outlet of the control device and prior to any releases to the atmosphere.

(ii) EPA Method 2, 2A, 2C, 2D, or 2F in appendix A–1 to part 60 of this chapter or EPA Method 2G in appendix A–2 to part 60 of this chapter, as applicable, to determine the volumetric flow rate of the stack gas.

(iii) EPA Method 3A or 3B in appendix A–2 to part 60 of this chapter to determine the dry molecular weight of the stack gas. The voluntary consensus standard ANSI/ASME PTC 19.10–1981 (incorporated by reference-see §63.14) may be used as an alternative to the manual procedures (but not instrumental procedures) in EPA Method 3B.

(iv) EPA Method 4 in appendix A–3 to part 60 of this chapter to determine the moisture content of the stack gas.

(v) EPA Method 5 or 5D in appendix A–3 to part 60 of this chapter or EPA Method 17 in appendix A–6 to part 60 of this chapter to determine the concentration of particulate matter.

(2) Each EPA Method 5, 5D, or 17 performance test must consist of three separate runs. Each run must be conducted for a minimum of 1 hour. If any measurement result is reported as below the method detection limit, use the method detection limit for that value when calculating the average particulate matter concentration. The average particulate matter concentration from the three runs will be used to determine compliance, as shown in Equation 1 of this section.

$$C_i = \frac{C_1 + C_2 + C_3}{3} \quad (Eq.\ 1)$$

Where:

$C_i$ = Average particulate matter concentration for emission unit, grains per dry standard cubic foot, (gr/dscf);

$C_1$ = Particulate matter concentration for run 1 corresponding to emission unit, gr/dscf;

$C_2$ = Particulate matter concentration for run 2 corresponding to emission unit, gr/dscf; and

$C_3$ = Particulate matter concentration for run 3 corresponding to emission unit, gr/dscf.

(3) For each ore crushing and handling affected source and each finished pellet handling affected source, you must determine the flow-weighted mean concentration of particulate matter emissions from all emission units in each affected source following the procedure in paragraph (b)(3)(i) or (ii) of this section.

(i) If an initial performance test is conducted on all emission units within an affected source, calculate the flow-weighted mean concentration of particulate matter emissions from the affected source using Equation 2 of this section.

$$C_a = \frac{\sum_{i=1}^{n}(C_i * Q_i)}{\sum_{i=1}^{n} Q_i} \qquad \text{(Eq. 2)}$$

Where:

$C_a$ = Flow-weighted mean concentration of particulate matter for all emission units within affected source, (gr/dscf);

$C_i$ = Average particulate matter concentration measured during the performance test from emission unit ''i'' in affected source, as determined using Equation 1 of this section, gr/dscf;

$Q_i$ = Average volumetric flow rate of stack gas measured during the performance test from emission unit ''i'' in affected source, dscf/hr; and

n = Number of emission units in affected source.

(ii) If you are grouping similar emission units together in accordance with § 63.9620(e), you must follow the procedures in paragraphs (b)(3)(ii)(A) through (C) of this section.

(A) Assign the average particulate matter concentration measured from the representative unit, as determined from Equation 1 of this section, to each emission unit within the corresponding group of similar units.

(B) Establish the maximum operating volumetric flow rate of exhaust gas from each emission unit within each group of similar units.

(C) Using the data from paragraphs (b)(3)(ii)(A) and (B) of this section, calculate the flow-weighted mean concentration of particulate matter emissions from the affected source using Equation 3 of this section.

$$C_a = \frac{\sum_{k=1}^{m}(C_k * Q_k)}{\sum_{k=1}^{m} Q_k} \qquad \text{(Eq. 3)}$$

Where:

$C_a$ = Flow-weighted mean concentration of particulate matter for all emission units within affected source, gr/dscf;

$C_k$ = Average particulate matter concentration measured during the performance test from the representative emission unit in group ''k'' of affected source ''a,'' as determined using Equation 1 of this section, gr/dscf;

$Q_k$ = Sum of the maximum operating volumetric flow rates of stack gas from all similar emission units within group ''k'' of affected source, dscf/hr; and

m = Number of similar emission unit groups in affected source.

(c) For each ore dryer affected source and each indurating furnace affected source, you must determine compliance with the applicable emission limit for particulate matter in Table 1 to this subpart by following the test methods and procedures in paragraphs (c)(1) through (3) of this section.

(1) Determine the concentration of particulate matter for each stack according to the test methods listed in paragraphs (c)(1)(i) through (v) of this section.

(i) EPA Method 1 or 1A in appendix A–1 to part 60 of this chapter to select sampling port locations and the number of traverse points. Sampling ports must be located at the outlet of the control device and prior to any releases to the atmosphere.

(ii) EPA Method 2, 2A, 2C, 2D, or 2F in appendix A–1 to part 60 of this chapter or EPA Method 2G in appendix A–2 to part 60 of this chapter, as applicable,

to determine the volumetric flow rate of the stack gas.

(iii) EPA Method 3A or 3B in appendix A–2 to part 60 of this chapter to determine the dry molecular weight of the stack gas. The voluntary consensus standard ANSI/ASME PTC 19.10–1981 (incorporated by reference-see § 63.14) may be used as an alternative to the manual procedures (but not instrumental procedures) in EPA Method 3B.

(iv) EPA Method 4 in appendix A–3 to part 60 of this chapter to determine the moisture content of the stack gas.

(v) EPA Method 5 or 5D in appendix A–3 to part 60 of this chapter to determine the concentration of particulate matter.

(2) Each EPA Method 5 or 5D performance test must consist of three separate runs. Each run must be conducted for a minimum of 1 hour. If any measurement result is reported as below the method detection limit, use the method detection limit for that value when calculating the average particulate matter concentration. The average particulate matter concentration from the three runs will be used to determine compliance, as shown in Equation 1 of this section.

[68 FR 61888, Oct. 30, 2003, as amended at 85 FR 45492, July 28, 2020]

### § 63.9622 What test methods and other procedures must I use to establish and demonstrate initial compliance with the operating limits?

(a) For wet scrubbers subject to performance testing in § 63.9620 and operating limits for pressure drop and scrubber water flow rate in § 63.9590(b)(1), you must establish site-specific operating limits according to the procedures in paragraphs (a)(1) through (3) of this section.

(1) Using the CPMS required in § 63.9631(b), measure and record the pressure drop and scrubber water flow rate every 15 minutes during each run of the particulate matter performance test.

(2) Calculate and record the average pressure drop and scrubber water flow rate for each individual test run. Your operating limits are established as the lowest average pressure drop and the lowest average scrubber water flow rate corresponding to any of the three test runs.

(3) If a rod-deck venturi scrubber is applied to an indurating furnace to meet any particulate matter emission limit in Table 1 to this subpart, you may establish a lower average pressure drop operating limit by using historical average pressure drop data from a certified performance test completed on or after December 18, 2002 instead of using the average pressure drop value determined during the initial performance test, as specified in paragraph (a)(2) of this section. If historical average pressure drop data are used to establish an operating limit (i.e., using data from a certified performance test conducted prior to the promulgation date of the final rule), then the average particulate matter concentration corresponding to the historical performance test must be at or below the applicable indurating furnace emission limit, as listed in Table 1 to this subpart.

(b) On or before January 28, 2022, for affected sources that commenced construction or reconstruction on or before September 25, 2019, for dynamic wet scrubbers subject to performance testing in § 63.9620 and operating limits for scrubber water flow rate and either fan amperage or pressure drop in § 63.9590(b)(2), you must establish site-specific operating limits according to the procedures in paragraphs (b)(1) and (2) of this section. After January 28, 2022, for affected sources that commenced construction or reconstruction on or before September 25, 2019, and after July 28, 2020, or upon start-up, which ever date is later, for affected sources that commenced construction or reconstruction after September 25, 2019, for dynamic wet scrubbers subject to performance testing in § 63.9620 and operating limits for scrubber water flow rate and fan amperage in § 63.9590(b)(2), you must establish site-specific operating limits according to the procedures in paragraphs (b)(1) and (2) of this section.

(1) On or before January 28, 2022, for affected sources that commenced construction or reconstruction on or before September 25, 2019, using the CPMS required in § 63.9631(b), measure and record the scrubber water flow rate

and either the fan amperage or pressure drop every 15 minutes during each run of the particulate matter performance test. After January 28, 2022, for affected sources that commenced construction or reconstruction on or before September 25, 2019, and after July 28, 2020, or upon start-up, which ever date is later, for affected sources that commenced construction or reconstruction after September 25, 2019, using the CPMS required in § 63.9631(b), measure and record the scrubber water flow rate and the fan amperage every 15 minutes during each run of the particulate matter performance test.

(2) On or before January 28, 2022, for affected sources that commenced construction or reconstruction on or before September 25, 2019, calculate and record the average scrubber water flow rate and either the average fan amperage or the average pressure drop for each individual test run. Your operating limits are established as the lowest average scrubber water flow rate and either the lowest average fan amperage or pressure drop value corresponding to any of the three test runs. After January 28, 2022, for affected sources that commenced construction or reconstruction on or before September 25, 2019, and after July 28, 2020, or upon start-up, which ever date is later, for affected sources that commenced construction or reconstruction after September 25, 2019, calculate and record the average scrubber water flow rate and the average fan amperage for each individual test run. Your operating limits are established as the lowest average scrubber water flow rate and the lowest average fan amperage value corresponding to any of the three test runs.

(c) For a dry electrostatic precipitator subject to performance testing in § 63.9620 and operating limits in § 63.9590(b)(3), you must establish a site-specific operating limit according to the procedures in paragraphs (c)(1) or (2) of this section.

(1) If the operating limit for your dry electrostatic precipitator is a 6-minute average opacity of emissions value, then you must follow the requirements in paragraphs (c)(1)(i) through (iii) of this section.

(i) Using the continuous opacity monitoring system (COMS) required in § 63.9631(d)(1), measure and record the opacity of emissions from each control device stack during the particulate matter performance test.

(ii) Compute and record the 6-minute opacity averages from 24 or more data points equally spaced over each 6-minute period (e.g., at 15-second intervals) during the test runs.

(iii) Using the opacity measurements from a performance test that meets the emission limit, determine the opacity value corresponding to the 99 percent upper confidence level of a normal distribution of the 6-minute opacity averages.

(2) If the operating limit for your dry electrostatic precipitator is the daily average secondary voltage and daily average secondary current for each field, then you must follow the requirements in paragraphs (c)(2)(i) and (ii) of this section.

(i) Using the CPMS required in § 63.9631(d)(2), measure and record the secondary voltage and secondary current for each dry electrostatic precipitator field every 15 minutes during each run of the particulate matter performance test.

(ii) Calculate and record the average secondary voltage and secondary current for each dry electrostatic precipitator field for each individual test run. Your operating limits are established as the lowest average secondary voltage and secondary current value for each dry electrostatic precipitator field corresponding to any of the three test runs.

(d) For a wet electrostatic precipitator subject to performance testing in § 63.9620 and operating limit in § 63.9590(b)(4), you must establish a site-specific operating limit according to the procedures in paragraphs (d)(1) and (2) of this section.

(1) Using the CPMS required in § 63.9631(e), measure and record the parametric values in paragraphs (d)(1)(i) through (iii) of this section for each wet electrostatic precipitator field every 15 minutes during each run of the particulate matter performance test.

(i) Secondary voltage;

(ii) Water flow rate; and

(iii) Stack outlet temperature.

(2) For each individual test run, calculate and record the average value for each operating parameter in paragraphs (d)(1)(i) through (iii) of this section for each wet electrostatic precipitator field. Your operating limits are established as the lowest average value for each operating parameter of secondary voltage and water flow rate corresponding to any of the three test runs, and the highest average value for each stack outlet temperature corresponding to any of the three test runs.

(e) If you use an air pollution control device other than a wet scrubber, dynamic wet scrubber, dry electrostatic precipitator, wet electrostatic precipitator, or baghouse, and it is subject to performance testing in § 63.9620, you must submit a site-specific monitoring plan in accordance with § 63.9631(f). The site-specific monitoring plan must include the site-specific procedures for demonstrating initial and continuous compliance with the corresponding operating limits.

(f) You may change the operating limits for any air pollution control device as long as you meet the requirements in paragraphs (f)(1) through (3) of this section.

(1) Submit a written notification to the Administrator of your request to conduct a new performance test to revise the operating limit.

(2) Conduct a performance test to demonstrate compliance with the applicable emission limitation in Table 1 to this subpart.

(3) Establish revised operating limits according to the applicable procedures in paragraphs (a) through (e) of this section.

[68 FR 61888, Oct. 30, 2003, as amended at 85 FR 45493, July 28, 2020]

### § 63.9623 How do I demonstrate initial compliance with the emission limitations that apply to me?

(a) For each affected source subject to an emission limit in Table 1 to this subpart, you must demonstrate initial compliance by meeting the emission limit requirements in paragraphs (a)(1) through (4) of this section.

(1) For ore crushing and handling, the flow-weighted mean concentration of particulate matter, determined according to the procedures in §§ 63.9620(a) and 63.9621(b), must not exceed the emission limits in Table 1 to this subpart.

(2) For indurating furnaces, the flow-weighted mean concentration of particulate matter, determined according to the procedures in §§ 63.9620(b) and 63.9621(c), must not exceed the emission limits in Table 1 to this subpart.

(3) For finished pellet handling, the flow-weighted mean concentration of particulate matter, determined according to the procedures in §§ 63.9620(c) and 63.9621(b), must not exceed the emission limits in Table 1 to this subpart.

(4) For ore dryers, the flow-weighted mean concentration of particulate matter, determined according to the procedures in §§ 63.9620(d) and 63.9621(c), must not exceed the emission limits in Table 1 to this subpart.

(b) For each affected source subject to an emission limit in Table 1 to this subpart, you must demonstrate initial compliance by meeting the operating limit requirements in paragraphs (b)(1) through (5) of this section.

(1) For each wet scrubber subject to performance testing in § 63.9620 and operating limits for pressure drop and scrubber water flow rate in § 63.9590(b)(1), you have established appropriate site-specific operating limits and have a record of the pressure drop and scrubber water flow rate measured during the performance test in accordance with § 63.9622(a).

(2) On or before January 28, 2022, for affected sources that commenced construction or reconstruction on or before September 25, 2019, for each dynamic wet scrubber subject to performance testing in § 63.9620 and operating limits for scrubber water flow rate and either fan amperage or pressure drop in § 63.9590(b)(2), you have established appropriate site-specific operating limits and have a record of the scrubber water flow rate and either the fan amperage or pressure drop value, measured during the performance test in accordance with § 63.9622(b). After January 28, 2022, for affected sources that commenced construction or reconstruction on or before September 25, 2019, and after July 28, 2020, or upon start-up, which ever date is later, for affected sources

that commenced construction or reconstruction after September 25, 2019, for each dynamic wet scrubber subject to performance testing in § 63.9620 and operating limits for scrubber water flow rate and fan amperage in § 63.9590(b)(2), you have established appropriate site-specific operating limits and have a record of the scrubber water flow rate and the fan amperage value, measured during the performance test in accordance with § 63.9622(b).

(3) For each dry electrostatic precipitator subject to performance testing in § 63.9620 and one of the operating limits in § 63.9590(b)(3), you must meet the requirements in paragraph (b)(3)(i) or (ii) of this section.

(i) If you are subject to the operating limit for opacity in § 63.9590(b)(3)(i), you have established appropriate site-specific operating limits and have a record of the opacity measured during the performance test in accordance with § 63.9622(c)(1).

(ii) If you are subject to the operating limit for secondary voltage and secondary current in § 63.9590(b)(3)(ii), you have established appropriate site-specific operating limits and have a record of the secondary voltage and secondary current measured during the performance test in accordance with § 63.9622(c)(2).

(4) For each wet electrostatic precipitator subject to performance testing in § 63.9620 and operating limits for secondary voltage, water flow rate, and stack outlet temperature in § 63.9590(b)(4), you have established appropriate site-specific operating limits and have a record of the secondary voltage, water flow rate, and stack outlet temperature measured during the performance test in accordance with § 63.9622(d).

(5) For other air pollution control devices subject to performance testing in § 63.9620 and operating limits in accordance with § 63.9590(b)(5), you have submitted a site-specific monitoring plan in accordance with § 63.9631(f) and have a record of the site-specific operating limits as measured during the performance test in accordance with § 63.9622(e).

(c) For each emission limitation and operating limit that applies to you, you must submit a notification of compliance status according to § 63.9640(e).

[68 FR 61888, Oct. 30, 2003, as amended at 85 FR 45494, July 28, 2020]

### § 63.9624 How do I demonstrate initial compliance with the work practice standards that apply to me?

You must demonstrate initial compliance with the work practice standards by meeting the requirements in paragraphs (a) through (c) of this section.

(a) You must prepare a fugitive dust emissions control plan in accordance with the requirements in § 63.9591.

(b) You must submit to the Administrator the fugitive dust emissions control plan in accordance with the requirements in § 63.9591.

(c) You must implement each control practice according to the procedures specified in your fugitive dust emissions control plan.

### § 63.9625 How do I demonstrate initial compliance with the operation and maintenance requirements that apply to me?

For each air pollution control device subject to operating limits in § 63.9590(b), you have demonstrated initial compliance with the operation and maintenance requirements if you meet all of the requirements in paragraphs (a) through (d) of this section.

(a) You have prepared the operation and maintenance plan for air pollution control devices in accordance with § 63.9600(b).

(b) You have operated each air pollution control device according to the procedures in the operation and maintenance plan.

(c) You have submitted a notification of compliance status according to the requirements in § 63.9640(e).

(d) You have prepared a site-specific monitoring plan in accordance with § 63.9632(b).

[68 FR 61888, Oct. 30, 2003, as amended at 85 FR 45494, July 28, 2020]

CONTINUOUS COMPLIANCE REQUIREMENTS

### § 63.9630 When must I conduct subsequent performance tests?

(a) You must conduct subsequent performance tests to demonstrate continued compliance with the ore crushing and handling emission limits in Table 1 to this subpart according to the schedule developed by your permitting authority and shown in your title V permit. If a title V permit has not been issued, you must submit a testing plan and schedule, containing the information specified in paragraph (e) of this section, to the permitting authority for approval.

(b) You must conduct subsequent performance tests on all stacks associated with indurating furnaces to demonstrate continued compliance with the indurating furnace emission limits in Table 1 to this subpart according to the schedule developed by your permitting authority and shown in your title V permit, but no less frequent than twice per 5-year permit term. If a title V permit has not been issued, you must submit a testing plan and schedule, containing the information specified in paragraph (e) of this section, to the permitting authority for approval. For indurating furnaces with multiple stacks, the performance tests for all stacks associated with that indurating furnace must be conducted within a reasonable period of time, such that the indurating furnace operating characteristics remain representative for the duration of the stack tests.

(c) You must conduct subsequent performance tests to demonstrate continued compliance with the finished pellet handling emission limits in Table 1 to this subpart according to the schedule developed by your permitting authority and shown in your title V permit. If a title V permit has not been issued, you must submit a testing plan and schedule, containing the information specified in paragraph (e) of this section, to the permitting authority for approval.

(d) You must conduct subsequent performance tests on all stacks associated with ore dryers to demonstrate continued compliance with the ore dryer emission limits in Table 1 to this subpart according to the schedule developed by your permitting authority and shown in your title V permit. If a title V permit has not been issued, you must submit a testing plan and schedule, containing the information specified in paragraph (e) of this section, to the permitting authority for approval. For ore dryers with multiple stacks, the performance tests for all stacks associated with an ore dryer must be conducted within a reasonable period of time, such that the ore dryer operating characteristics remain representative for the duration of the stack tests.

(e) If your plant does not have a title V permit, you must submit a testing plan for subsequent performance tests as required in paragraphs (a) through (d) of this section. This testing plan must be submitted to the Administrator on or before the compliance date that is specified in § 63.9583. The testing plan must contain the information specified in paragraphs (e)(1) and (2) of this section. You must maintain a current copy of the testing plan onsite, and it must be available for inspection upon request. You must keep the plan for the life of the affected source or until the affected source is no longer subject to the requirements of this subpart.

(1) A list of all emission units.

(2) A schedule indicating when you will conduct subsequent performance tests for particulate matter for each of the emission units.

### § 63.9631 What are my monitoring requirements?

(a) On or before January 25, 2021, for affected sources that commenced construction or reconstruction on or before September 25, 2019, for each baghouse applied to meet any particulate matter emission limit in Table 1 to this subpart, you must install, operate, and maintain a bag leak detection system to monitor the relative change in particulate matter loadings according to the requirements in § 63.9632(a), and conduct inspections at their specified frequencies according to the requirements in paragraphs (a)(1) through (8) of this section. After January 25, 2021, for affected sources that commenced construction or reconstruction on or before September 25, 2019, and after July 28, 2020, or upon

start-up, which ever date is later, for affected sources that commenced construction or reconstruction after September 25, 2019, for each baghouse applied to meet any particulate matter emission limit in Table 1 to this subpart, you must install, operate, and maintain a bag leak detection system to monitor the relative change in particulate matter loadings according to the requirements in § 63.9632(a), and conduct inspections at their specified frequencies according to the requirements in paragraphs (a)(1) through (6) and (8) of this section. For each baghouse applied to meet any particulate matter emission limit in Table 1 to this subpart that is not required by § 63.9632(a) to be equipped with a bag leak detection system, you must conduct inspections at their specified frequencies according to the requirements in paragraphs (a)(1) through (8) of this section.

(1) Monitor the pressure drop across each baghouse cell each day to ensure pressure drop is within the normal operating range.

(2) Confirm that dust is being removed from hoppers through weekly visual inspections or other means of ensuring the proper functioning of removal mechanisms.

(3) Check the compressed air supply of pulse-jet baghouses each day.

(4) Monitor cleaning cycles to ensure proper operation using an appropriate methodology.

(5) Check bag cleaning mechanisms for proper functioning through monthly visual inspections or equivalent means.

(6) Make monthly visual checks of bag tension on reverse air and shaker-type baghouses to ensure that bags are not kinked (kneed or bent) or lying on their sides. You do not have to make this check for shaker-type baghouses that have self-tensioning (spring-loaded) devices.

(7) Confirm the physical integrity of the baghouse through quarterly visual inspections of the baghouse interior for air leaks.

(8) Inspect fans for wear, material buildup, and corrosion through quarterly visual inspections, vibration detectors, or equivalent means.

(b) Except as provided in paragraph (c) of this section, for each wet scrubber subject to the operating limits for pressure drop and scrubber water flow rate in § 63.9590(b)(1), you must install, operate, and maintain a CPMS according to the requirements in § 63.9632(b) through (e) and monitor the daily average pressure drop and daily average scrubber water flow rate according to the requirements in § 63.9633.

(c) On or before January 28, 2022, for affected sources that commenced construction or reconstruction on or before September 25, 2019, for each dynamic wet scrubber subject to the scrubber water flow rate and either the fan amperage or pressure drop operating limits in § 63.9590(b)(2), you must install, operate, and maintain a CPMS according to the requirements in § 63.9632(b) through (e) and monitor the daily average scrubber water flow rate and either the daily average fan amperage or the daily average pressure drop according to the requirements in § 63.9633. After January 28, 2022, for affected sources that commenced construction or reconstruction on or before September 25, 2019, and after July 28, 2020, or upon start-up, which ever date is later, for affected sources that commenced construction or reconstruction after September 25, 2019, for each dynamic wet scrubber subject to the scrubber water flow rate and the fan amperage operating limits in § 63.9590(b)(2), you must install, operate, and maintain a CPMS according to the requirements in § 63.9632(b) through (e) and monitor the daily average scrubber water flow rate and the daily average fan amperage according to the requirements in § 63.9633.

(d) For each dry electrostatic precipitator subject to the operating limits in § 63.9590(b)(3), you must follow the monitoring requirements in paragraph (d)(1) or (2) of this section.

(1) If the operating limit you choose to monitor is the 6-minute average opacity of emissions in accordance with § 63.9590(b)(3)(i), you must install, operate, and maintain a COMS according to the requirements in § 63.9632(f) and monitor the 6-minute average opacity of emissions exiting each control device stack according to the requirements in § 63.9633.

(2) If the operating limit you choose to monitor is average secondary voltage and average secondary current for each dry electrostatic precipitator field in accordance with § 63.9590(b)(3)(ii), you must install, operate, and maintain a CPMS according to the requirements in § 63.9632(b) through (e) and monitor the daily average secondary voltage and daily average secondary current according to the requirements in § 63.9633.

(e) For each wet electrostatic precipitator subject to the operating limits in § 63.9590(b)(4), you must install, operate, and maintain a CPMS according to the requirements in § 63.9632(b) through (e) and monitor the daily average secondary voltage, daily average stack outlet temperature, and daily average water flow rate according to the requirements in § 63.9633.

(f) If you use any air pollution control device other than a baghouse, wet scrubber, dry electrostatic precipitator, or wet electrostatic precipitator, you must submit a site-specific monitoring plan that includes the information in paragraphs (f)(1) through (4) of this section. The monitoring plan is subject to approval by the Administrator. You must maintain a current copy of the monitoring plan onsite, and it must be available for inspection upon request. You must keep the plan for the life of the affected source or until the affected source is no longer subject to the requirements of this subpart.

(1) A description of the device.

(2) Test results collected in accordance with § 63.9621 verifying the performance of the device for reducing emissions of particulate matter to the atmosphere to the levels required by this subpart.

(3) A copy of the operation and maintenance plan required in § 63.9600(b).

(4) Appropriate operating parameters that will be monitored to maintain continuous compliance with the applicable emission limitation(s).

[68 FR 61888, Oct. 30, 2003, as amended at 85 FR 45494, July 28, 2020]

## § 63.9632 What are the installation, operation, and maintenance requirements for my monitoring equipment?

(a) On or before January 25, 2021, for affected sources that commenced construction or reconstruction on or before September 25, 2019, for each negative pressure baghouse or positive pressure baghouse equipped with a stack, applied to meet any particulate emission limit in Table 1 to this subpart, you must install, operate, and maintain a bag leak detection system for each exhaust stack according to the requirements in paragraphs (a)(1) and (2) and (a)(4) through (9) of this section. After January 25, 2021, for affected sources that commenced construction or reconstruction on or before September 25, 2019, and after July 28, 2020, or upon start-up, which ever date is later, for affected sources that commenced construction or reconstruction after September 25, 2019, for each negative pressure baghouse or positive pressure baghouse equipped with a stack, applied to meet any particulate emission limit in Table 1 to this subpart, you must install, operate, and maintain a bag leak detection system for each exhaust stack according to the requirements in paragraphs (a)(1) through (9) of this section.

(1) The system must be certified by the manufacturer to be capable of detecting emissions of particulate matter at concentrations of 10 milligrams per actual cubic meter (0.0044 grains per actual cubic foot) or less.

(2) The system must provide output of relative changes in particulate matter loadings.

(3) The bag leak detection system must be equipped with a device to continuously record the output signal from the sensor.

(4) The system must be equipped with an alarm that will sound when an increase in relative particulate loadings is detected over the alarm level set point established according to paragraph (a)(5) of this section. The alarm must be located such that it can be heard by the appropriate plant personnel.

(5) For each bag leak detection system, you must develop and submit to the Administrator for approval, a site-

specific monitoring plan that addresses the items identified in paragraphs (a)(5)(i) through (v) of this section. The monitoring plan shall be consistent with the manufacturer's specifications and recommendations contained in the U.S. Environmental Protection Agency (U.S. EPA) guidance document, ''Fabric Filter Bag Leak Detection Guidance'' (EPA–454/R–98–015) (incorporated by reference—see § 63.14). You must operate and maintain the bag leak detection system according to the site-specific monitoring plan at all times. The plan shall describe all of the items in paragraphs (a)(5)(i) through (v) of this section.

(i) Installation of the bag leak detection system.

(ii) Initial and periodic adjustment of the bag leak detection system including how the alarm set-point will be established.

(iii) Operation of the bag leak detection system including quality assurance procedures.

(iv) How the bag leak detection system will be maintained including a routine maintenance schedule and spare parts inventory list.

(v) How the bag leak detection system output shall be recorded and stored.

(6) To make the initial adjustment of the system, establish the baseline output by adjusting the sensitivity (range) and the averaging period of the device. Then, establish the alarm set points and the alarm delay time (if applicable).

(7) Following initial adjustment, do not adjust sensitivity or range, averaging period, alarm set point, or alarm delay time, without approval from the Administrator except as provided for in paragraph (a)(7)(i) of this section. In no event may the sensitivity be increased more than 100 percent or decreased by more than 50 percent over a 365-day period unless such adjustment follows a complete baghouse inspection that demonstrates the baghouse is in good operating condition.

(i) Once per quarter, you may adjust the sensitivity or range of the bag leak detection system to account for seasonal effects, including temperature and humidity, according to the procedures identified in the site-specific monitoring plan required under paragraph (a)(5) of this section.

(ii) [Reserved]

(8) Where multiple detectors are required, the system's instrumentation and alarm may be shared among detectors.

(9) The bag leak detector sensor must be installed downstream of the baghouse and upstream of any wet scrubber.

(b) For each CPMS required in § 63.9631, you must develop and make available for inspection upon request by the permitting authority a site-specific monitoring plan that addresses the requirements in paragraphs (b)(1) through (7) of this section.

(1) Installation of the CPMS sampling probe or other interface at a measurement location relative to each affected emission unit such that the measurement is representative of control of the exhaust emissions (e.g., on or downstream of the last control device).

(2) Performance and equipment specifications for the sample interface, the parametric signal analyzer, and the data collection and reduction system.

(3) On or before January 25, 2021, for affected sources that commenced construction or reconstruction on or before September 25, 2019, performance evaluation procedures and acceptance criteria (*e.g.*, calibrations). After January 25, 2021, for affected sources that commenced construction or reconstruction on or before September 25, 2019, and after July 28, 2020, or upon start-up, which ever date is later, for affected sources that commenced construction or reconstruction after September 25, 2019, performance evaluation procedures, a schedule for performing such procedures, and acceptance criteria (*e.g.*, calibrations), as well as corrective action to be taken if a performance evaluation does not meet the acceptance criteria. If a CPMS calibration fails, the CPMS is considered to be inoperative until you take corrective action and the system passes calibration.

(4) On or before January 25, 2021, for affected sources that commenced construction or reconstruction on or before September 25, 2019, ongoing operation and maintenance procedures in

accordance with the general requirements of § 63.8(c)(1), (3), (4)(ii), (7), and (8). After January 25, 2021, for affected sources that commenced construction or reconstruction on or before September 25, 2019, and after July 28, 2020, or upon start-up, which ever date is later, for affected sources that commenced construction or reconstruction after September 25, 2019, ongoing operation and maintenance procedures and a schedule for preventative maintenance procedures, in a manner consistent with good air pollution control practices and in accordance with the general requirements of § 63.8(c)(1)(ii), (c)(3), (c)(4)(ii), and (c)(7) and (8).

(5) On or before January 25, 2021, for affected sources that commenced construction or reconstruction on or before September 25, 2019, ongoing data quality assurance procedures in accordance with the general requirements of § 63.8(d). After January 25, 2021, for affected sources that commenced construction or reconstruction on or before September 25, 2019, and after July 28, 2020, or upon start-up, which ever date is later, for affected sources that commenced construction or reconstruction after September 25, 2019, ongoing data quality assurance procedures in accordance with the general requirements of § 63.8(d)(1) and (2). The owner or operator shall keep these written procedures on record for the life of the affected source or until the affected source is no longer subject to the provisions of this part, to be made available for inspection, upon request, by the Administrator. If the performance evaluation plan is revised, the owner or operator shall keep previous (*i.e.,* superseded) versions of the performance evaluation plan on record to be made available for inspection, upon request, by the Administrator, for a period of 5 years after each revision to the plan.

(6) On or before January 25, 2021, for affected sources that commenced construction or reconstruction on or before September 25, 2019, ongoing recordkeeping and reporting procedures in accordance with the general requirements of § 63.10(c), (e)(1), and (e)(2)(i). After January 25, 2021, for affected sources that commenced construction or reconstruction on or before September 25, 2019, and after July 28, 2020, or upon start-up, which ever date is later, for affected sources that commenced construction or reconstruction after September 25, 2019, ongoing recordkeeping and reporting procedures in accordance with the general requirements of § 63.10(c)(1) through (14), (e)(1), and (e)(2)(i).

(7) Corrective action procedures that you will follow in the event an air pollution control device, except for a baghouse, exceeds an established operating limit as required in § 63.9600(b)(3).

(c) Unless otherwise specified, each CPMS must meet the requirements in paragraphs (c)(1) and (2) of this section.

(1) Each CPMS must complete a minimum of one cycle of operation for each successive 15-minute period and must have valid data for at least 95 percent of every daily averaging period.

(2) Each CPMS must determine and record the daily average of all recorded readings.

(d) You must conduct a performance evaluation of each CPMS in accordance with your site-specific monitoring plan.

(e) You must operate and maintain the CPMS in continuous operation according to the site-specific monitoring plan.

(f) For each dry electrostatic precipitator subject to the opacity operating limit in § 63.9590(b)(3)(i), you must install, operate, and maintain each COMS according to the requirements in paragraphs (f)(1) through (4) of this section.

(1) You must install each COMS and conduct a performance evaluation of each COMS according to § 63.8 and Performance Specification 1 in appendix B to 40 CFR part 60.

(2) On or before January 25, 2021, for affected sources that commenced construction or reconstruction on or before September 25, 2019, you must develop and implement a quality control program for operating and maintaining each continuous opacity monitoring system (COMS) according to § 63.8. At a minimum, the quality control program must include a daily calibration drift assessment, quarterly performance audit, and annual zero alignment of each COMS. After January 25, 2021, for

affected sources that commenced construction or reconstruction on or before September 25, 2019, and after July 28, 2020, or upon start-up, which ever date is later, for affected sources that commenced construction or reconstruction after September 25, 2019, you must develop and implement a quality control program for operating and maintaining each COMS according to § 63.8(a) and (b), (c)(1)(ii), (c)(2) through (8), (d)(1) and (2), and (e) through (g) and Procedure 3 in appendix F to 40 CFR part 60. At a minimum, the quality control program must include a daily calibration drift assessment, quarterly performance audit, and annual zero alignment of each COMS.

(3) You must operate and maintain each COMS according to § 63.8(e) and your quality control program. You must also identify periods the COMS is out of control, including any periods that the COMS fails to pass a daily calibration drift assessment, quarterly performance audit, or annual zero alignment audit.

(4) On or before January 25, 2021, for affected sources that commenced construction or reconstruction on or before September 25, 2019, you must determine and record the 6-minute average opacity for periods during which the COMS is not out of control. After January 25, 2021, for affected sources that commenced construction or reconstruction on or before September 25, 2019, and after July 28, 2020, or upon start-up, which ever date is later, for affected sources that commenced construction or reconstruction after September 25, 2019, you must determine and record the 6-minute average opacity for periods during which the COMS is not out of control. All COMS must complete a minimum of one cycle of sampling and analyzing for each successive 10-second period and one cycle of data recording for each successive 6-minute period.

[68 FR 61888, Oct. 30, 2003, as amended at 85 FR 45494, July 28, 2020]

### § 63.9633 How do I monitor and collect data to demonstrate continuous compliance?

(a) Except for monitoring malfunctions, out of control periods, associated repairs, and required quality assurance or control activities (including as applicable, calibration checks and required zero and span adjustments), you must monitor continuously (or collect data at all required intervals) at all times an affected source is operating.

(b) You may not use data recorded during monitoring malfunctions, out of control periods, associated repairs, and required quality assurance or control activities in data averages and calculations used to report emission or operating levels, or to fulfill a minimum data availability requirement. You must use all the data collected during all other periods in assessing compliance.

(c) A monitoring malfunction is any sudden, infrequent, not reasonably preventable failure of the monitoring system to provide valid data. Monitoring failures that are caused in part by poor maintenance or careless operation are not considered malfunctions.

[68 FR 61888, Oct. 30, 2003, as amended at 85 FR 45496, July 28, 2020]

### § 63.9634 How do I demonstrate continuous compliance with the emission limitations that apply to me?

(a) For each affected source subject to an emission limit in Table 1 to this subpart, you must demonstrate continuous compliance by meeting the requirements in paragraphs (b) through (f) of this section.

(b) For ore crushing and handling affected sources and finished pellet handling affected sources, you must demonstrate continuous compliance by meeting the requirements in paragraphs (b)(1) through (3) of this section.

(1) The flow-weighted mean concentration of particulate matter for all ore crushing and handling emission units and for all finished pellet handling emission units must be maintained at or below the emission limits in Table 1 to this subpart.

(2) You must conduct subsequent performance tests for emission units in the ore crushing and handling and finished pellet handling affected sources following the schedule in your title V permit. If a title V permit has not been issued, you must conduct subsequent performance tests according to a testing plan approved by the Administrator or delegated authority.

(3) For ore crushing and handling and finished pellet handling emission units not selected for initial performance testing and defined within a group of similar emission units in accordance with §63.9620(e), the site-specific operating limits established for the emission unit selected as representative of a group of similar emission units will be used as the operating limit for each emission unit within the group. The operating limit established for the representative unit must be met by each emission unit within the group.

(c) For ore dryers and indurating furnaces, you must demonstrate continuous compliance by meeting the requirements in paragraphs (c)(1) and (2) of this section.

(1) The flow-weighted mean concentration of particulate matter for all stacks from the ore dryer or indurating furnace must be maintained at or below the emission limits in Table 1 to this subpart.

(2) For ore dryers, you must conduct subsequent performance tests following the schedule in your title V permit. For indurating furnaces, you must conduct subsequent performance tests following the schedule in your title V permit, but no less frequent than twice per 5-year permit term. If a title V permit has not been issued, you must conduct subsequent performance tests according to a testing plan approved by the Administrator or delegated authority.

(d) On or before January 25, 2021, for affected sources that commenced construction or reconstruction on or before September 25, 2019, for each baghouse applied to meet any particulate emission limit in Table 1 to this subpart, you must demonstrate continuous compliance by completing the requirements in paragraphs (d)(1) and (2) of this section. After January 25, 2021, for affected sources that commenced construction or reconstruction on or before September 25, 2019, and after July 28, 2020, or upon start-up, which ever date is later, for affected sources that commenced construction or reconstruction after September 25, 2019, for each baghouse applied to meet any particulate emission limit in Table 1 to this subpart, you must demonstrate continuous compliance by completing the requirements in paragraphs (d)(1) through (3) of this section.

(1) Maintaining records of the time you initiated corrective action in the event of a bag leak detection system alarm, the corrective action(s) taken, and the date on which corrective action was completed.

(2) Inspecting and maintaining each baghouse according to the requirements in §63.9631(a) and recording all information needed to document conformance with the requirements in §63.9631(a). If you increase or decrease the sensitivity of the bag leak detection system beyond the limits specified in your site-specific monitoring plan, you must include a copy of the required written certification by a responsible official in the next semi-annual compliance report.

(3) Each bag leak detection system must be operated and maintained such that the alarm does not sound more than 5 percent of the operating time during a 6-month period. Calculate the alarm time as specified in paragraphs (d)(3)(i) through (iii) of this section.

(i) If inspection of the fabric filter demonstrates that no corrective action is required, no alarm time is counted.

(ii) If corrective action is required, each alarm time (*i.e.*, time that the alarm sounds) is counted as a minimum of 1 hour.

(iii) If it takes longer than 1 hour to initiate corrective action, each alarm time is counted as the actual amount of time taken to initiate corrective action.

(e) Except as provided in paragraph (f) of this section, for each wet scrubber subject to the operating limits for pressure drop and scrubber water flow rate in §63.9590(b)(1), you must demonstrate continuous compliance by completing the requirements of paragraphs (e)(1) through (4) of this section.

(1) Maintaining the daily average pressure drop and daily average scrubber water flow rate at or above the minimum levels established during the initial or subsequent performance test.

(2) Operating and maintaining each wet scrubber CPMS according to §63.9632(b) and recording all information needed to document conformance with these requirements.

(3) Collecting and reducing monitoring data for pressure drop and scrubber water flow rate according to § 63.9632(c) and recording all information needed to document conformance with these requirements.

(4) If the daily average pressure drop or daily average scrubber water flow rate is below the operating limits established for a corresponding emission unit or group of similar emission units, you must then follow the corrective action procedures in paragraph (j) of this section.

(f) On or before January 28, 2022, for affected sources that commenced construction or reconstruction on or before September 25, 2019, for each dynamic wet scrubber subject to the operating limits for scrubber water flow rate and either the fan amperage or pressure drop in § 63.9590(b)(2), you must demonstrate continuous compliance by completing the requirements of paragraphs (f)(1) through (4) of this section. After January 28, 2022, for affected sources that commenced construction or reconstruction on or before September 25, 2019, and after July 28, 2020, or upon start-up, which ever date is later, for affected sources that commenced construction or reconstruction after September 25, 2019, for each dynamic wet scrubber subject to the operating limits for scrubber water flow rate and the fan amperage in § 63.9590(b)(2), you must demonstrate continuous compliance by completing the requirements of paragraphs (f)(1) through (4) of this section.

(1) On or before January 28, 2022, for affected sources that commenced construction or reconstruction on or before September 25, 2019, maintaining the daily average scrubber water flow rate and either the daily average fan amperage or the daily average pressure drop at or above the minimum levels established during the initial or subsequent performance test. After January 28, 2022, for affected sources that commenced construction or reconstruction on or before September 25, 2019, and after July 28, 2020, or upon start-up, which ever date is later, for affected sources that commenced construction or reconstruction after September 25, 2019, maintaining the daily average scrubber water flow rate and the daily average fan amperage at or above the minimum levels established during the initial or subsequent performance test.

(2) Operating and maintaining each dynamic wet scrubber CPMS according to § 63.9632(b) and recording all information needed to document conformance with these requirements.

(3) On or before January 28, 2022, for affected sources that commenced construction or reconstruction on or before September 25, 2019, collecting and reducing monitoring data for scrubber water flow rate and either fan amperage or pressure drop according to § 63.9632(c) and recording all information needed to document conformance with the requirements in § 63.9632(c). After January 28, 2022, for affected sources that commenced construction or reconstruction on or before September 25, 2019, and after July 28, 2020, or upon start-up, which ever date is later, for affected sources that commenced construction or reconstruction after September 25, 2019, collecting and reducing monitoring data for scrubber water flow rate and fan amperage according to § 63.9632(c) and recording all information needed to document conformance with the requirements in § 63.9632(c).

(4) On or before January 28, 2022, for affected sources that commenced construction or reconstruction on or before September 25, 2019, if the daily average scrubber water flow rate, daily average fan amperage, or daily average pressure drop is below the operating limits established for a corresponding emission unit or group of similar emission units, you must then follow the corrective action procedures in paragraph (j) of this section. After January 28, 2022, for affected sources that commenced construction or reconstruction on or before September 25, 2019, and after July 28, 2020, or upon start-up, which ever date is later, for affected sources that commenced construction or reconstruction after September 25, 2019, if the daily average scrubber water flow rate or daily average fan amperage, is below the operating limits established for a corresponding emission unit or group of similar emission units, you must then follow the corrective action procedures in paragraph (j) of this section.

(g) For each dry electrostatic precipitator subject to operating limits in § 63.9590(b)(3), you must demonstrate continuous compliance by completing the requirements of paragraph (g)(1) or (2) of this section.

(1) If the operating limit for your dry electrostatic precipitator is a 6-minute average opacity of emissions value, then you must follow the requirements in paragraphs (g)(1)(i) through (iii) of this section.

(i) Maintaining the 6-minute average opacity of emissions at or below the maximum level established during the initial or subsequent performance test.

(ii) Operating and maintaining each COMS and reducing the COMS data according to § 63.9632(f).

(iii) If the 6-minute average opacity of emissions is above the operating limits established for a corresponding emission unit, you must then follow the corrective action procedures in paragraph (j) of this section.

(2) If the operating limit for your dry electrostatic precipitator is the daily average secondary voltage and daily average secondary current for each field, then you must follow the requirements in paragraphs (g)(2)(i) through (iv) of this section.

(i) Maintaining the daily average secondary voltage or daily average secondary current for each field at or above the minimum levels established during the initial or subsequent performance test.

(ii) Operating and maintaining each dry electrostatic precipitator CPMS according to § 63.9632(b) and recording all information needed to document conformance with these requirements.

(iii) Collecting and reducing monitoring data for secondary voltage or secondary current for each field according to § 63.9632(c) and recording all information needed to document conformance with these requirements.

(iv) If the daily average secondary voltage or daily average secondary current for each field is below the operating limits established for a corresponding emission unit, you must then follow the corrective action procedures in paragraph (j) of this section.

(h) For each wet electrostatic precipitator subject to the operating limits for secondary voltage, stack outlet temperature, and water flow rate in § 63.9590(b)(4), you must demonstrate continuous compliance by completing the requirements of paragraphs (h)(1) through (4) of this section.

(1) Maintaining the daily average secondary voltage and daily average scrubber water flow rate for each field at or above the minimum levels established during the initial or subsequent performance test. Maintaining the daily average stack outlet temperature at or below the maximum levels established during the initial or subsequent performance test.

(2) Operating and maintaining each wet electrostatic precipitator CPMS according to § 63.9632(b) and recording all information needed to document conformance with these requirements.

(3) Collecting and reducing monitoring data for secondary voltage, stack outlet temperature, and water flow rate according to § 63.9632(c) and recording all information needed to document conformance with these requirements.

(4) If the daily average secondary voltage, stack outlet temperature, or water flow rate does not meet the operating limits established for a corresponding emission unit, you must then follow the corrective action procedures in paragraph (j) of this section.

(i) If you use an air pollution control device other than a wet scrubber, dynamic wet scrubber, dry electrostatic precipitator, wet electrostatic precipitator, or baghouse, you must submit a site-specific monitoring plan in accordance with § 63.9631(f). The site-specific monitoring plan must include the site-specific procedures for demonstrating initial and continuous compliance with the corresponding operating limits.

(j) If the daily average operating parameter value for an emission unit or group of similar emission units does not meet the corresponding established operating limit, you must then follow the procedures in paragraphs (j)(1) through (4) of this section.

(1) You must initiate and complete initial corrective action within 10 calendar days and demonstrate that the initial corrective action was successful. During any period of corrective action, you must continue to monitor,

and record all required operating parameters for equipment that remains in operation. After the initial corrective action, if the daily average operating parameter value for the emission unit or group of similar emission units meets the operating limit established for the corresponding unit or group, then the corrective action was successful and the emission unit or group of similar emission units is in compliance with the established operating limits.

(2) If the initial corrective action required in paragraph (j)(1) of this section was not successful, then you must complete additional corrective action within 10 calendar days and demonstrate that the subsequent corrective action was successful. During any period of corrective action, you must continue to monitor, and record all required operating parameters for equipment that remains in operation. If the daily average operating parameter value for the emission unit or group of similar emission units meets the operating limit established for the corresponding unit or group, then the corrective action was successful, and the emission unit or group of similar emission units is in compliance with the established operating limits.

(3) If the second attempt at corrective action required in paragraph (j)(2) of this section was not successful, then you must repeat the procedures of paragraph (j)(2) of this section until the corrective action is successful. If the third attempt at corrective action is unsuccessful, you must conduct another performance test in accordance with the procedures in § 63.9622(f) and report to the Administrator as a deviation the third unsuccessful attempt at corrective action.

(4) After the third unsuccessful attempt at corrective action, you must submit to the Administrator the written report required in paragraph (j)(3) of this section within 5 calendar days after the third unsuccessful attempt at corrective action. This report must notify the Administrator that a deviation has occurred and document the types of corrective measures taken to address the problem that resulted in the deviation of established operating parameters and the resulting operating limits.

[68 FR 61888, Oct. 30, 2003, as amended at 85 FR 45496, July 28, 2020]

### § 63.9635 How do I demonstrate continuous compliance with the work practice standards that apply to me?

(a) You must demonstrate continuous compliance with the work practice standard requirements in § 63.9591 by operating in accordance with your fugitive dust emissions control plan at all times.

(b) You must maintain a current copy of the fugitive dust emissions control plan required in § 63.9591 onsite and it must be available for inspection upon request. You must keep the plan for the life of the affected source or until the affected source is no longer subject to the requirements of this subpart.

### § 63.9636 How do I demonstrate continuous compliance with the operation and maintenance requirements that apply to me?

(a) For each control device subject to an operating limit in § 63.9590(b), you must demonstrate continuous compliance with the operation and maintenance requirements in § 63.9600(b) by completing the requirements of paragraphs (a)(1) through (4) of this section.

(1) Performing preventative maintenance for each control device in accordance with § 63.9600(b)(1) and recording all information needed to document conformance with these requirements;

(2) Initiating and completing corrective action for a bag leak detection system alarm in accordance with § 63.9600(b)(2) and recording all information needed to document conformance with these requirements;

(3) Initiating and completing corrective action for a CPMS when you exceed an established operating limit for an air pollution control device except for a baghouse in accordance with § 63.9600(b)(3) and recording all information needed to document conformance with these requirements; and

(4) Implementing and maintaining site-specific good combustion practices

for each indurating furnace in accordance with § 63.9600(b)(4) and recording all information needed to document conformance with these requirements.

(b) You must maintain a current copy of the operation and maintenance plan required in § 63.9600(b) onsite, and it must be available for inspection upon request. You must keep the plan for the life of the affected source or until the affected source is no longer subject to the requirements of this subpart.

### § 63.9637 What other requirements must I meet to demonstrate continuous compliance?

(a) *Deviations.* You must report each instance in which you did not meet each emission limitation in Table 1 to this subpart that applies to you. You also must report each instance in which you did not meet the work practice standards in § 63.9591 and each instance in which you did not meet each operation and maintenance requirement in § 63.9600 that applies to you. These instances are deviations from the emission limitations, work practice standards, and operation and maintenance requirements in this subpart. These deviations must be reported in accordance with the requirements in § 63.9641.

(b) *Startups, shutdowns, and malfunctions.* For existing sources and for new or reconstructed sources which commenced construction or reconstruction on or before September 25, 2019, on or before January 25, 2021, for affected sources that commenced construction or reconstruction on or before September 25, 2019, consistent with §§ 63.6(e) and 63.7(e)(1), deviations that occur during a period of startup, shutdown, or malfunction are not violations if you demonstrate to the Administrator's satisfaction that you were operating in accordance with § 63.6(e)(1). The Administrator will determine whether deviations that occur during a period of startup, shutdown, or malfunction are violations, according to the provisions in § 63.6(e). After January 25, 2021, for affected sources that commenced construction or reconstruction on or before September 25, 2019, and after July 28, 2020, or upon start-up, which ever date is later, for affected sources that commenced construction or reconstruction after September 25, 2019, the exemptions for periods of startup, shutdown, and malfunction in § 63.6(e) no longer apply.

[85 FR 45497, July 28, 2020]

NOTIFICATIONS, REPORTS, AND RECORDS

### § 63.9640 What notifications must I submit and when?

(a) You must submit all of the notifications in §§ 63.7(b) and (c), 63.8(f)(4), and 63.9(b) through (h) that apply to you by the specified dates.

(b) As specified in § 63.9(b)(2), if you start up your affected source before October 30, 2003, you must submit your initial notification no later than 120 calendar days after October 30, 2003, or no later than 120 days after the source becomes subject to this subpart, whichever is later.

(c) As specified in § 63.9(b)(3), if you start up your new affected source on or after October 30, 2003, you must submit your initial notification no later than 120 calendar days after you become subject to this subpart.

(d) If you are required to conduct a performance test, you must submit a notification of intent to conduct a performance test at least 60 calendar days before the performance test is scheduled to begin, as required in § 63.7(b)(1).

(e) If you are required to conduct a performance test or other initial compliance demonstration, you must submit a notification of compliance status according to § 63.9(h)(2)(ii). The initial notification of compliance status must be submitted by the dates specified in paragraphs (e)(1) and (2) of this section.

(1) For each initial compliance demonstration that does not include a performance test, you must submit the notification of compliance status before the close of business on the 30th calendar day following completion of the initial compliance demonstration.

(2) On or before January 25, 2021, for affected sources that commenced construction or reconstruction on or before September 25, 2019, for each initial compliance demonstration that does include a performance test, you must submit the notification of compliance status, including the performance test results, before the close of business on

the 60th calendar day following the completion of the performance test according to § 63.10(d)(2). After January 25, 2021, for affected sources that commenced construction or reconstruction on or before September 25, 2019, and after July 28, 2020, or upon start-up, which ever date is later, for affected sources that commenced construction or reconstruction after September 25, 2019, for each initial compliance demonstration that does include a performance test, you must submit the notification of compliance status, including the performance test results, before the close of business on the 60th calendar day following the completion of the performance test according to § 63.10(d)(2). If the performance test results have been submitted electronically in accordance with § 63.9641(f), the process unit(s) tested, the pollutant(s) tested, and the date that such performance test was conducted may be submitted in the notification of compliance status report in lieu of the performance test results. The performance test results must be submitted to the Compliance and Emissions Data Reporting Interface (CEDRI) by the date the notification of compliance status report is submitted.

[68 FR 61888, Oct. 30, 2003, as amended at 85 FR 45497, July 28, 2020; 85 FR 73917, Nov. 19, 2020]

### § 63.9641 What reports must I submit and when?

(a) *Compliance report due dates.* Unless the Administrator has approved a different schedule, you must submit a semiannual compliance report to your permitting authority according to the requirements in paragraphs (a)(1) through (5) of this section.

(1) The first compliance report must cover the period beginning on the compliance date that is specified for your affected source in § 63.9583 and ending on June 30 or December 31, whichever date comes first after the compliance date that is specified for your source in § 63.9583.

(2) On or before January 25, 2021, for affected sources that commenced construction or reconstruction on or before September 25, 2019, the first compliance report must be postmarked or delivered no later than July 31 or January 31, whichever date comes first after your first compliance report is due. After January 25, 2021, for affected sources that commenced construction or reconstruction on or before September 25, 2019, and after July 28, 2020, or upon start-up, which ever date is later, for affected sources that commenced construction or reconstruction after September 25, 2019, the first compliance report must be electronically submitted, postmarked or delivered no later than July 31 or January 31, whichever date comes first after your first compliance report is due.

(3) Each subsequent compliance report must cover the semiannual reporting period from January 1 through June 30 or the semiannual reporting period from July 1 through December 31.

(4) On or before January 25, 2021, for affected sources that commenced construction or reconstruction on or before September 25, 2019, each subsequent compliance report must be postmarked or delivered no later than July 31 or January 31, whichever date comes first after the end of the semiannual reporting period. After January 25, 2021, for affected sources that commenced construction or reconstruction on or before September 25, 2019, and after July 28, 2020, or upon start-up, which ever date is later, for affected sources that commenced construction or reconstruction after September 25, 2019, each subsequent compliance report must be electronically submitted, postmarked or delivered no later than July 31 or January 31, whichever date comes first after the end of the semiannual reporting period.

(5) For each affected source that is subject to permitting regulations pursuant to 40 CFR part 70 or 40 CFR part 71, and if the permitting authority has established dates for submitting semiannual reports pursuant to 40 CFR 70.6(a)(3)(iii)(A) or 40 CFR 71.6(a)(3)(iii)(A), you may submit the first and subsequent compliance reports according to the dates the permitting authority has established instead of according to the dates in paragraphs (a)(1) through (4) of this section.

(b) *Compliance report contents.* Each compliance report must include the information in paragraphs (b)(1) through (8) of this section, as applicable.

(1) Company name and address.

(2) On or before January 25, 2021, for affected sources that commenced construction or reconstruction on or before September 25, 2019, statement by a responsible official, with the official's name, title, and signature, certifying the truth, accuracy, and completeness of the content of the report. After January 25, 2021, for affected sources that commenced construction or reconstruction on or before September 25, 2019, and after July 28, 2020, or upon start-up, which ever date is later, for affected sources that commenced construction or reconstruction after September 25, 2019, statement by a responsible official, with the official's name, title, and signature, certifying the truth, accuracy, and completeness of the content of the report. If your report is submitted via CEDRI, the certifier's electronic signature during the submission process replaces the requirement in this paragraph (b)(2).

(3) On or before January 25, 2021, for affected sources that commenced construction or reconstruction on or before September 25, 2019, date of report and beginning and ending dates of the reporting period. After January 25, 2021, for affected sources that commenced construction or reconstruction on or before September 25, 2019, and after July 28, 2020, or upon start-up, which ever date is later, for affected sources that commenced construction or reconstruction after September 25, 2019, date of report and beginning and ending dates of the reporting period. You are no longer required to provide the date of report when the report is submitted via CEDRI.

(4) On or before January 25, 2021, for affected sources that commenced construction or reconstruction on or before September 25, 2019, if you had a startup, shutdown, or malfunction during the reporting period and you took actions consistent with your startup, shutdown, and malfunction plan, the compliance report must include the information in §63.10(d)(5)(i). A startup, shutdown, and malfunction plan and the information in §63.10(d)(5)(i) is not required after January 25, 2021, for affected sources that commenced construction or reconstruction on or before September 25, 2019, and is not required after July 28, 2020, for affected sources that commenced construction or reconstruction after September 25, 2019.

(5) If there were no deviations from the continuous compliance requirements in §§63.9634 through 63.9636 that apply to you, then provide a statement that there were no deviations from the emission limitations, work practice standards, or operation and maintenance requirements during the reporting period.

(6) If there were no periods during which a continuous monitoring system (including a CPMS or COMS) was out-of-control as specified in §63.8(c)(7), then provide a statement that there were no periods during which a continuous monitoring system was out-of-control during the reporting period.

(7) On or before January 25, 2021, for affected sources that commenced construction or reconstruction on or before September 25, 2019, for each deviation from an emission limitation in Table 1 to this subpart that occurs at an affected source where you are not using a continuous monitoring system (including a CPMS or COMS) to comply with an emission limitation in this subpart, the compliance report must contain the information in paragraphs (b)(1) through (4) of this section and the information in paragraphs (b)(7)(i) and (ii) of this section. This includes periods of startup, shutdown, and malfunction. After January 25, 2021, for affected sources that commenced construction or reconstruction on or before September 25, 2019, and after July 28, 2020, or upon start-up, which ever date is later, for affected sources that commenced construction or reconstruction after September 25, 2019, for each deviation from an emission limitation in Table 1 to this subpart that occurs at an affected source where you are not using a continuous monitoring system (including a CPMS or COMS) to comply with an emission limitation in this subpart, the compliance report must contain the information in paragraphs (b)(7)(i) and (ii) of this section.

(i) The total operating time in hours of each affected source during the reporting period.

(ii) On or before January 25, 2021, for affected sources that commenced construction or reconstruction on or before September 25, 2019, information on the number, duration, and cause of deviation (including unknown cause) as applicable, and the corrective action taken. After January 25, 2021, for affected sources that commenced construction or reconstruction on or before September 25, 2019, and after July 28, 2020, or upon start-up, which ever date is later, for affected sources that commenced construction or reconstruction after September 25, 2019, information on the affected sources or equipment, the emission limit deviated from, the start date, start time, duration in hours, and cause of each deviation (including unknown cause) as applicable, an estimate of the quantity in pounds of each regulated pollutant emitted over an emission limit and a description of the method used to estimate the emissions, and the corrective action taken.

(8) On or before January 25, 2021, for affected sources that commenced construction or reconstruction on or before September 25, 2019, for each deviation from an emission limitation occurring at an affected source where you are using a continuous monitoring system (including a CPMS or COMS) to comply with the emission limitation in this subpart, you must include the information in paragraphs (b)(1) through (4) of this section and the information in paragraphs (b)(8)(i) through (xi) of this section. This includes periods of startup, shutdown, and malfunction. After January 25, 2021, for affected sources that commenced construction or reconstruction on or before September 25, 2019, and after July 28, 2020, or upon start-up, which ever date is later, for affected sources that commenced construction or reconstruction after September 25, 2019, for each deviation from an emission limitation occurring at an affected source where you are using a continuous monitoring system (including a CPMS or COMS) to comply with the emission limitation in this subpart, you must include the information in paragraphs (b)(1) through (4) of this section and the information in paragraphs (b)(8)(i) through (xi) of this section.

(i) The date and time that each malfunction started and stopped.

(ii) The start date, start time, and duration in hours (or minutes for COMS) that each continuous monitoring system was inoperative, except for zero (low-level) and high-level checks.

(iii) The start date, start time, and duration in hours (or minutes for COMS) that each continuous monitoring system was out-of-control, including the information in § 63.8(c)(8).

(iv) On or before January 25, 2021, for affected sources that commenced construction or reconstruction on or before September 25, 2019, for each affected source or equipment, the date and time that each deviation started and stopped, the cause of the deviation, and whether each deviation occurred during a period of startup, shutdown, or malfunction or during another period. After January 25, 2021, for affected sources that commenced construction or reconstruction on or before September 25, 2019, and after July 28, 2020, or upon start-up, which ever date is later, for affected sources that commenced construction or reconstruction after September 25, 2019, for each affected source or equipment, the date and time that each deviation started and stopped, the cause of the deviation, and whether each deviation occurred during a period of malfunction or during another period.

(v) The total duration in hours (or minutes for COMS) of all deviations for each Continuous Monitoring System (CMS) during the reporting period, the total operating time in hours of the affected source during the reporting period, and the total duration as a percent of the total source operating time during that reporting period.

(vi) On or before January 25, 2021, for affected sources that commenced construction or reconstruction on or before September 25, 2019, a breakdown of the total duration of the deviations during the reporting period including those that are due to startup, shutdown, control equipment problems, process problems, other known causes,

and other unknown causes. After January 25, 2021, for affected sources that commenced construction or reconstruction on or before September 25, 2019, and after July 28, 2020, or upon start-up, which ever date is later, for affected sources that commenced construction or reconstruction after September 25, 2019, a breakdown of the total duration in hours (or minutes for COMS) of the deviations during the reporting period including those that are due to control equipment problems, process problems, other known causes, and other unknown causes.

(vii) The total duration in hours (or minutes for COMS) of continuous monitoring system downtime for each continuous monitoring system during the reporting period, the total operating time in hours of the affected source during the reporting period, and the total duration of continuous monitoring system downtime as a percent of the total source operating time during the reporting period.

(viii) A brief description of the process units.

(ix) The monitoring equipment manufacturer and model number and the pollutant or parameter monitored.

(x) The date of the latest continuous monitoring system certification or audit.

(xi) A description of any changes in continuous monitoring systems, processes, or controls since the last reporting period.

(c) *Submitting compliance reports electronically*. Beginning on January 25, 2021, submit all subsequent compliance reports to the EPA via CEDRI, which can be accessed through the EPA's Central Data Exchange (CDX) (*https://cdx.epa.gov/*). The EPA will make all the information submitted through CEDRI available to the public without further notice to you. Do not use CEDRI to submit information you claim as confidential business information (CBI). Anything submitted using CEDRI cannot later be claimed to be CBI. You must use the appropriate electronic report template on the CEDRI website (*https://www.epa.gov/electronic-reporting-air-emissions/compliance-and-emissions-data-reporting-interface-cedri*) for this subpart. The report must be submitted by the deadline specified in this subpart, regardless of the method in which the report is submitted. Although we do not expect persons to assert a claim of CBI, if persons wish to assert a CBI claim, submit a complete report, including information claimed to be CBI, to the EPA. The report must be generated using the appropriate form on the CEDRI website. Submit the file on a compact disc, flash drive, or other commonly used electronic storage medium and clearly mark the medium as CBI. Mail the electronic medium to U.S. EPA/OAQPS/SPPD/CORE CBI Office, Attention: Taconite Iron Ore Processing Sector Lead, MD C404–02, 4930 Old Page Rd., Durham, NC 27703. The same file with the CBI omitted must be submitted to the EPA via the EPA's CDX as described earlier in this paragraph (c). All CBI claims must be asserted at the time of submission. Furthermore, under CAA section 114(c) emissions data in not entitled to confidential treatment, and EPA is required to make emissions data available to the public. Thus, emissions data will not be protected as CBI and will be made publicly available. On or before January 25, 2021, for affected sources that commenced construction or reconstruction on or before September 25, 2019, if you had a startup, shutdown, or malfunction during the reporting period that is not consistent with your startup, shutdown, and malfunction plan you must submit an immediate startup, shutdown and malfunction report according to the requirements in §63.10(d)(5)(ii). After January 25, 2021, for affected sources that commenced construction or reconstruction on or before September 25, 2019, and after July 28, 2020, or upon start-up, which ever date is later, for affected sources that commenced construction or reconstruction after September 25, 2019, an immediate startup, shutdown, and malfunction report is not required.

(d) *Part 70 monitoring report*. If you have obtained a title V operating permit for an affected source pursuant to 40 CFR part 70 or 40 CFR part 71, you must report all deviations as defined in this subpart in the semiannual monitoring report required by 40 CFR 70.6(a)(3)(iii)(A) or 40 CFR

71.6(a)(3)(iii)(A). If you submit a compliance report for an affected source along with, or as part of, the semiannual monitoring report required by 40 CFR 70.6(a)(3)(iii)(A) or 40 CFR 71.6(a)(3)(iii)(A), and the compliance report includes all the required information concerning deviations from any emission limitation or operation and maintenance requirement in this subpart, submission of the compliance report satisfies any obligation to report the same deviations in the semiannual monitoring report. However, submission of a compliance report does not otherwise affect any obligation you may have to report deviations from permit requirements for an affected source to your permitting authority.

(e) *Immediate corrective action report.* If you had three unsuccessful attempts of applying corrective action as described in § 63.9634(j) on an emission unit or group of emission units, then you must submit an immediate corrective action report. Within 5 calendar days after the third unsuccessful attempt at corrective action, you must submit to the Administrator a written report in accordance with § 63.9634(j)(3) and (4). This report must notify the Administrator that a deviation has occurred and document the types of corrective measures taken to address the problem that resulted in the deviation of established operating parameters and the resulting operating limits.

(f) *Performance tests.* After January 25, 2021, for affected sources that commenced construction or reconstruction on or before September 25, 2019, and after July 28, 2020, or upon start-up, which ever date is later, for affected sources that commenced construction or reconstruction after September 25, 2019, within 60 days after the date of completing each performance test required by this subpart, you must submit the results of the performance test following the procedures specified in paragraphs (f)(1) through (3) of this section.

(1) *Data collected using test methods supported by the EPA's Electronic Reporting Tool (ERT) as listed on the EPA's ERT website (https://www.epa.gov/electronic-reporting-air-emissions/electronic-reporting-tool-ert) at the time of the test.* Submit the results of the performance test to the EPA via CEDRI, which can be accessed through the EPA's CDX (*https://cdx.epa.gov/*). The data must be submitted in a file format generated through the use of the EPA's ERT. Alternatively, you may submit an electronic file consistent with the extensible markup language (XML) schema listed on the EPA's ERT website.

(2) *Data collected using test methods that are not supported by the EPA's ERT as listed on the EPA's ERT website at the time of the test.* The results of the performance test must be included as an attachment in the ERT or an alternate electronic file consistent with the XML schema listed on the EPA's ERT website. Submit the ERT generated package or alternative file to the EPA via CEDRI.

(3) *Confidential business information (CBI).* The EPA will make all the information submitted through CEDRI available to the public without further notice to you. Do not use CEDRI to submit information you claim as CBI. Anything submitted using CEDRI cannot later be claimed to be CBI. Although we do not expect persons to assert a claim of CBI, if persons wish to assert a CBI claim, submit a complete file, including information claimed to be CBI, to the EPA. The file must be generated through the use of the EPA's ERT or an alternate electronic file consistent with the XML schema listed on the EPA's ERT website. Submit the file on a compact disc, flash drive, or other commonly used electronic storage medium and clearly mark the medium as CBI. Mail the electronic medium to U.S. EPA/OAQPS/CORE CBI Office, Attention: Group Leader, Measurement Policy Group, MD C404–02, 4930 Old Page Rd., Durham, NC 27703. The same file with the CBI omitted must be submitted to the EPA via the EPA's CDX as described in paragraphs (f)(1) and (2) of this section. All CBI claims must be asserted at the time of submission. Furthermore, under CAA section 114(c) emissions data in not entitled to confidential treatment, and EPA is required to make emissions data available to the public. Thus, emissions data will not be protected as CBI and will be made publicly available.

(g) *Claims of EPA system outage.* After January 25, 2021, for affected sources that commenced construction or reconstruction on or before September 25, 2019, and after July 28, 2020, or upon start-up, which ever date is later, for affected sources that commenced construction or reconstruction after September 25, 2019, if you are required to electronically submit a report through CEDRI in the EPA's CDX, you may assert a claim of EPA system outage for failure to timely comply with the reporting requirement. To assert a claim of EPA system outage, you must meet the requirements outlined in paragraphs (g)(1) through (7) of this section.

(1) You must have been or will be precluded from accessing CEDRI and submitting a required report within the time prescribed due to an outage of either the EPA's CEDRI or CDX systems.

(2) The outage must have occurred within the period of time beginning five business days prior to the date that the submission is due.

(3) The outage may be planned or unplanned.

(4) You must submit notification to the Administrator in writing as soon as possible following the date you first knew, or through due diligence should have known, that the event may cause or has caused a delay in reporting.

(5) You must provide to the Administrator a written description identifying:

(i) The date(s) and time(s) when CDX or CEDRI was accessed and the system was unavailable;

(ii) A rationale for attributing the delay in reporting beyond the regulatory deadline to EPA system outage;

(iii) Measures taken or to be taken to minimize the delay in reporting; and

(iv) The date by which you propose to report, or if you have already met the reporting requirement at the time of the notification, the date you reported.

(6) The decision to accept the claim of EPA system outage and allow an extension to the reporting deadline is solely within the discretion of the Administrator.

(7) In any circumstance, the report must be submitted electronically as soon as possible after the outage is resolved.

(h) *Claims of force majeure.* After January 25, 2021, for affected sources that commenced construction or reconstruction on or before September 25, 2019, and after July 28, 2020, or upon start-up, which ever date is later, for affected sources that commenced construction or reconstruction after September 25, 2019, if you are required to electronically submit a report through CEDRI in the EPA's CDX, you may assert a claim of *force majeure* for failure to timely comply with the reporting requirement. To assert a claim of *force majeure,* you must meet the requirements outlined in paragraphs (h)(1) through (5) of this section.

(1) You may submit a claim if a *force majeure* event is about to occur, occurs, or has occurred or there are lingering effects from such an event within the period of time beginning five business days prior to the date the submission is due. For the purposes of this section, a *force majeure* event is defined as an event that will be or has been caused by circumstances beyond the control of the affected facility, its contractors, or any entity controlled by the affected facility that prevents you from complying with the requirement to submit a report electronically within the time period prescribed. Examples of such events are acts of nature (*e.g.,* hurricanes, earthquakes, or floods), acts of war or terrorism, or equipment failure or safety hazard beyond the control of the affected facility (*e.g.,* large scale power outage).

(2) You must submit notification to the Administrator in writing as soon as possible following the date you first knew, or through due diligence should have known, that the event may cause or has caused a delay in reporting.

(3) You must provide to the Administrator:

(i) A written description of the *force majeure* event;

(ii) A rationale for attributing the delay in reporting beyond the regulatory deadline to the *force majeure* event;

(iii) Measures taken or to be taken to minimize the delay in reporting; and

(iv) The date by which you propose to report, or if you have already met the reporting requirement at the time of the notification, the date you reported.

(4) The decision to accept the claim of *force majeure* and allow an extension to the reporting deadline is solely within the discretion of the Administrator.

(5) In any circumstance, the reporting must occur as soon as possible after the *force majeure* event occurs.

[68 FR 61888, Oct. 30, 2003, as amended at 85 FR 45498, July 28, 2020]

### § 63.9642 What records must I keep?

(a) On or before January 25, 2021, for affected sources that commenced construction or reconstruction on or before September 25, 2019, you must keep the records listed in paragraphs (a)(1) through (3) of this section. After January 25, 2021, for affected sources that commenced construction or reconstruction on or before September 25, 2019, and after July 28, 2020, or upon start-up, which ever date is later, for affected sources that commenced construction or reconstruction after September 25, 2019, you must keep the records listed in paragraphs (a)(1) through (6) of this section.

(1) A copy of each notification and report that you submitted to comply with this subpart, including all documentation supporting any initial notification or notification of compliance status that you submitted, according to the requirements in § 63.10(b)(2)(xiv).

(2) On or before January 25, 2021, for affected sources that commenced construction or reconstruction on or before September 25, 2019, the records in § 63.6(e)(3)(iii) through (v) related to startup, shutdown, and malfunction. After January 25, 2021, for affected sources that commenced construction or reconstruction on or before September 25, 2019, and after July 28, 2020, or upon start-up, which ever date is later, for affected sources that commenced construction or reconstruction after September 25, 2019, a startup, shutdown, and malfunction plan is not required.

(3) Records of performance tests and performance evaluations as required in § 63.10(b)(2)(viii).

(4) In the event that an affected unit fails to meet an applicable standard, record the number of failures. For each failure record the date, time, the cause and duration of each failure.

(5) For each failure to meet an applicable standard, record and retain a list of the affected sources or equipment, an estimate of the quantity of each regulated pollutant emitted over any emission limit and a description of the method used to estimate the emissions.

(6) Record actions taken in accordance with the general duty requirements to minimize emissions in § 63.9600(a) and any corrective actions taken to return the affected unit to its normal or usual manner of operation.

(b) For each COMS, you must keep the records specified in paragraphs (b)(1) through (4) of this section.

(1) Records described in § 63.10(b)(2)(vi) through (xi).

(2) Monitoring data for COMS during a performance evaluation as required in § 63.6(h)(7)(i) and (ii).

(3) On or before January 25, 2021, for affected sources that commenced construction or reconstruction on or before September 25, 2019, previous (that is, superseded) versions of the performance evaluation plan as required in § 63.8(d)(3). After January 25, 2021, for affected sources that commenced construction or reconstruction on or before September 25, 2019, and after July 28, 2020, or upon start-up, which ever date is later, for affected sources that commenced construction or reconstruction after September 25, 2019, previous (that is, superseded) versions of the performance evaluation plan as required in § 63.9632(b)(5), with the program of corrective action included in the plan required under § 63.8(d)(2).

(4) Records of the date and time that each deviation started and stopped, and whether the deviation occurred during a period of startup, shutdown, or malfunction or during another period.

(c) You must keep the records required in §§ 63.9634 through 63.9636 to show continuous compliance with each emission limitation, work practice standard, and operation and maintenance requirement that applies to you.

[68 FR 61888, Oct. 30, 2003, as amended at 85 FR 45500, July 28, 2020]

### § 63.9643 In what form and how long must I keep my records?

(a) Your records must be in a form suitable and readily available for expeditious review, according to § 63.10(b)(1).

(b) As specified in § 63.10(b)(1), you must keep each record for 5 years following the date of each occurrence, measurement, maintenance, corrective action, report, or record.

(c) You must keep each record on site for at least 2 years after the date of each occurrence, measurement, maintenance, corrective action, report, or record according to § 63.10(b)(1). You can keep the records offsite for the remaining 3 years.

OTHER REQUIREMENTS AND INFORMATION

### § 63.9650 What parts of the General Provisions apply to me?

Table 2 to this subpart shows which parts of the General Provisions in §§ 63.1 through 63.16 apply to you.

[85 FR 45501, July 28, 2020]

### § 63.9651 Who implements and enforces this subpart?

(a) This subpart can be implemented and enforced by us, the EPA, or a delegated authority such as your State, local, or tribal agency. If the EPA Administrator has delegated authority to your State, local, or tribal agency, then that agency has the authority to implement and enforce this subpart. You should contact your EPA Regional Office to find out if this subpart is delegated to your State, local, or tribal agency.

(b) In delegating implementation and enforcement authority of this subpart to a State, local, or tribal agency under subpart E of this part, the authorities contained in paragraph (c) of this section are retained by the Administrator of the EPA and are not transferred to the State, local, or tribal agency.

(c) The authorities that will not be delegated to state, local, or tribal agencies are specified in paragraphs (c)(1) through (5) of this section.

(1) Approval of non-opacity emission limitations and work practice standards under § 63.6(h)(9) and as defined in § 63.90.

(2) Approval of major alternatives to test methods under § 63.7(e)(2)(ii) and (f) and as defined in § 63.90.

(3) Approval of major alternatives to monitoring under § 63.8(f) and as defined in § 63.90.

(4) Approval of major alternatives to recordkeeping and reporting under § 63.10(f) and as defined in § 63.90.

(5) Approval of an alternative to any electronic reporting to the EPA required by this subpart.

[68 FR 61888, Oct. 30, 2003, as amended at 85 FR 45501, July 28, 2020]

### § 63.9652 What definitions apply to this subpart?

Terms used in this subpart are defined in the Clean Air Act, in § 63.2, and in this section as follows.

*Affected source* means each new or existing ore crushing and handling operation, ore dryer, indurating furnace, or finished pellet handling operation, at your taconite iron ore processing plant.

*Bag leak detection system* means a system that is capable of continuously monitoring relative particulate matter (dust) loadings in the exhaust of a baghouse to detect bag leaks and other upset conditions. A bag leak detection system includes, but is not limited to, an instrument that operates on triboelectric, light scattering, light transmittance, or other effect to continuously monitor relative particulate matter loadings.

*Crusher* means a machine used to crush taconite ore and includes feeders or conveyors located immediately below the crushing surfaces. Crushers include, but are not limited to, gyratory crushers and cone crushers.

*Deviation* means any instance in which an affected source subject to this subpart, or an owner or operator of such a source:

(1) Fails to meet any requirement or obligation established by this subpart, including but not limited to any emission limitation (including operating limits) or operation and maintenance requirement; or

(2) Fails to meet any term or condition that is adopted to implement an applicable requirement in this subpart and that is included in the operating

permit for any affected source required to obtain such a permit.

*Dynamic wet scrubber* means an air emissions control device which utilizes a mechanically powered fan to cause contact between the process exhaust gas stream and the scrubbing liquid which are introduced concurrently into the fan inlet.

*Emission limitation* means any emission limit, opacity limit, or operating limit.

*Finished pellet handling* means the transfer of fired taconite pellets from the indurating furnace to the finished pellet stockpiles at the plant. Finished pellet handling includes, but is not limited to, furnace discharge or grate discharge, and finished pellet screening, transfer, and storage. The atmospheric pellet cooler vent stack and gravity conveyor gallery vents designed to remove heat and water vapor from the structure are not included as a part of the finished pellet handling affected source.

*Fugitive dust emission source* means a stationary source from which particles are discharged to the atmosphere due to wind or mechanical inducement such as vehicle traffic. Fugitive dust sources include, but are not limited to:

(1) Stockpiles (includes, but is not limited to, stockpiles of uncrushed ore, crushed ore, or finished pellets);

(2) Material transfer points;

(3) Plant roadways;

(4) Tailings basins;

(5) Pellet loading areas; and

(6) Yard areas.

*Grate feed* means the transfer of unfired taconite pellets from the pelletizer into the indurating furnace.

*Grate kiln indurating furnace* means a furnace system that consists of a traveling grate, a rotary kiln, and an annular cooler. The grate kiln indurating furnace begins at the point where the grate feed conveyor discharges the green balls onto the furnace traveling grate and ends where the hardened pellets exit the cooler. The atmospheric pellet cooler vent stack is not included as part of the grate kiln indurating furnace.

*Indurating* means the process whereby unfired taconite pellets, called green balls, are hardened at high temperature in an indurating furnace. Types of indurating furnaces include straight grate indurating furnaces and grate kiln indurating furnaces.

*Ore crushing and handling* means the process whereby dry taconite ore is crushed and screened. Ore crushing and handling includes, but is not limited to, all dry crushing operations (e.g., primary, secondary, and tertiary crushing), dry ore conveyance and transfer points, dry ore classification and screening, dry ore storage and stockpiling, dry milling, dry cobbing (i.e., dry magnetic separation), and the grate feed. Ore crushing and handling specifically excludes any operations where the dry crushed ore is saturated with water, such as wet milling and wet magnetic separation.

*Ore dryer* means a rotary dryer that repeatedly tumbles wet taconite ore concentrate through a heated air stream to reduce the amount of entrained moisture in the taconite ore concentrate.

*Pellet cooler vent stacks* means atmospheric vents in the cooler section of the grate kiln indurating furnace that exhaust cooling air that is not returned for recuperation. Pellet cooler vent stacks are not to be confused with the cooler discharge stack, which is in the pellet loadout or dumping area.

*Pellet loading area* means that portion of a taconite iron ore processing plant where taconite pellets are loaded into trucks or railcars.

*Responsible official* means responsible official as defined in § 63.2.

*Rod-deck venturi scrubber* means a wet scrubber emission control device in which the inlet air flows through a bed of parallel metal pipes spaced apart to produce a series of parallel venturi throats.

*Screen* means a device for separating material according to size by passing undersize material through one or more mesh surfaces (screens) in series and retaining oversize material on the mesh surfaces (screens).

*Storage bin* means a facility for storage (including surge bins and hoppers) of taconite ore or taconite pellets prior to further processing or loading.

*Straight grate indurating furnace* means a furnace system that consists of a traveling grate that carries the

taconite pellets through different furnace temperature zones. In the straight grate indurating furnace a layer of fired pellets, called the hearth layer, is placed on the traveling grate prior to the addition of unfired pellets. The straight grate indurating furnace begins at the point where the grate feed conveyor discharges the green balls onto the furnace traveling grate and ends where the hardened pellets drop off of the traveling grate.

*Taconite iron ore processing* means the separation and concentration of iron ore from taconite, a low-grade iron ore, to produce taconite pellets.

*Taconite ore* means a low-grade iron ore suitable for concentration of magnetite or hematite by fine grinding and magnetic or flotation treatment, from which pellets containing iron can be produced.

*Tailings basin* means a natural or artificial impoundment in which gangue or other refuse material resulting from the washing, concentration or treatment of ground taconite iron ore is confined.

*Wet scrubber* means an air pollution control device that removes particulate matter and acid gases from the waste gas stream of stationary sources. The pollutants are removed primarily through the impaction, diffusion, interception and/or absorption of the pollutant onto droplets of liquid. Wet scrubbers include venturi scrubbers, marble bed scrubbers, or impingement scrubbers. For purposes of this subpart, wet scrubbers do not include dynamic wet scrubbers.

[68 FR 61888, Oct. 30, 2003, as amended at 85 FR 45501, July 28, 2020]

TABLE 1 TO SUBPART RRRRR OF PART 63—EMISSION LIMITS

As required in §63.9590(a), you must comply with each applicable emission limit in the following table:

| If your affected source is . . . | and the affected source is categorized as . . . | then you must comply with the flow-weighted mean concentration of particulate matter discharged to the atmosphere from the affected source, as determined using the procedures in §63.9621(b), such that you must not exceed . . . |
|---|---|---|
| 1. Ore crushing and handling emission units. | Existing | 0.008 grains per dry standard cubic foot (gr/dscf). |
| | New | 0.005 gr/dscf. |
| 2. Straight grate indurating furnace processing magnetite. | Existing | 0.01 gr/dscf. |
| | New | 0.006 gr/dscf. |
| 3. Grate kiln indurating furnace processing magnetite. | Existing | 0.01 gr/dscf. |
| | New | 0.006 gr/dscf. |
| 4. Grate kiln indurating furnace processing hematite. | Existing | 0.03 gr/dscf. |
| | New | 0.018 gr/dscf. |
| 5. Finished pellet handling emission units | Existing | 0.008 gr/dscf. |
| | New | 0.005 gr/dscf. |
| 6. Ore dryer | Existing | 0.052 gr/dscf. |
| | New | 0.025 gr/dscf. |

TABLE 2 TO SUBPART RRRRR OF PART 63—APPLICABILITY OF GENERAL PROVISIONS TO SUBPART RRRRR OF PART 63

As required in §63.9650, you must comply with the requirements of the NESHAP General Provisions (40 CFR part 63, subpart A) shown in the following table:

| Citation | Subject | Applies to subpart RRRRR | Explanation |
|---|---|---|---|
| §63.1(a)(1)–(4) | Applicability | Yes. | |
| §63.1(a)(5) | [Reserved] | No. | |
| §63.1(a)(6) | Applicability | Yes. | |
| §63.1(a)(7)–(9) | [Reserved] | No. | |
| §63.1(a)(10)–(12) | Applicability | Yes. | |
| §63.1(b)(1) | Initial Applicability Determination. | Yes. | |
| §63.1(b)(2) | [Reserved] | No. | |
| §63.1(b)(3) | Initial Applicability Determination. | Yes. | |

| Citation | Subject | Applies to subpart RRRRR | Explanation |
|---|---|---|---|
| § 63.1(c)(1)–(2) | Applicability After Standard Established, Permit Requirements. | Yes. | |
| § 63.1(c)(3)–(4) | [Reserved] | No. | |
| § 63.1(c)(5) | Area Source Becomes Major. | Yes. | |
| § 63.1(c)(6) | Reclassification | Yes. | |
| § 63.1(d) | [Reserved] | No. | |
| § 63.1(e) | Equivalency of Permit Limits. | Yes. | |
| § 63.2 | Definitions | Yes. | |
| § 63.3(a)–(c) | Units and Abbreviations | Yes. | |
| § 63.4(a)(1)–(2) | Prohibited Activities | Yes. | |
| § 63.4(a)(3)–(5) | [Reserved] | No. | |
| § 63.4(b)–(c) | Circumvention, Fragmentation. | Yes. | |
| § 63.5(a)(1)–(2) | Construction/Reconstruction, Applicability. | Yes. | |
| § 63.5(b)(1) | Construction/Reconstruction, Applicability. | Yes. | |
| § 63.5(b)(2) | [Reserved] | No. | |
| § 63.5(b)(3)–(4) | Construction/Reconstruction, Applicability. | Yes. | |
| § 63.5(b)(5) | [Reserved] | No. | |
| § 63.5(b)(6) | Applicability | Yes. | |
| § 63.5(c) | [Reserved] | No. | |
| § 63.5(d)(1)–(4) | Application for Approval of Construction or Reconstruction. | Yes. | |
| § 63.5(e) | Approval of Construction or Reconstruction. | Yes. | |
| § 63.5(f) | Approval Based on State Review. | Yes. | |
| § 63.6(a) | Compliance with Standards and Maintenance Requirements. | Yes. | |
| § 63.6(b)(1)–(5) | Compliance Dates for New/Reconstructed Sources. | Yes. | |
| § 63.6(b)(6) | [Reserved] | No. | |
| § 63.6(b)(7) | Compliance Dates for New/Reconstructed Sources. | Yes. | |
| § 63.6(c)(1)–(2) | Compliance Dates for Existing Sources. | Yes. | |
| § 63.6(c)(3)–(4) | [Reserved] | No. | |
| § 63.6(c)(5) | Compliance Dates for Existing Sources. | Yes. | |
| § 63.6(d) | [Reserved] | No. | |
| § 63.6(e)(1)(i) | Operation and Maintenance Requirements—General Duty to Minimize Emissions. | Yes, on or before the compliance date specified in § 63.9600(a). No, after the compliance date specified in § 63.9600(a). | See § 63.9600(a) for general duty requirement. |
| § 63.6(e)(1)(ii) | Operation and Maintenance Requirements—Requirement to Correct Malfunction as Soon as Possible. | No. | |
| § 63.6(e)(1)(iii) | Operation and Maintenance Requirements—Enforceability. | Yes. | |
| § 63.6(e)(2) | [Reserved] | No. | |
| § 63.6(e)(3) | Startup, Shutdown, Malfunction (SSM) Plan. | Yes, on or before the compliance date specified in § 63.9610(c). No, after the compliance date specified in § 63.9610(c). | |
| § 63.6(f)(1) | SSM Exemption | No | See § 63.9600(a). |
| § 63.6(f)(2)–(3) | Methods for Determining Compliance. | Yes. | |
| § 63.6(g)(1)–(3) | Alternative Nonopacity Standard. | Yes. | |
| § 63.6(h), except (h)(1). | Compliance with Opacity and Visible Emission (VE) Standards. | No | Opacity limits in subpart RRRRR are established as part of performance testing in order to set operating limits for ESPs. |
| § 63.6(h)(1) | Compliance except during SSM. | No | See § 63.9600(a). |

| Citation | Subject | Applies to subpart RRRRR | Explanation |
|---|---|---|---|
| § 63.6(i)(1)–(14) | Extension of Compliance | Yes. | |
| § 63.6(i)(15) | [Reserved] | No. | |
| § 63.6(i)(16) | Extension of Compliance | Yes. | |
| § 63.6(j) | Presidential Compliance Exemption. | Yes. | |
| § 63.7(a)(1)–(2) | Applicability and Performance Test Dates. | No | Subpart RRRRR specifies performance test applicability and dates. |
| § 63.7(a)(3)–(4) | Performance Testing Requirements. | Yes. | |
| § 63.7(b) | Notification | Yes. | |
| § 63.7(c) | Quality Assurance/Test Plan. | Yes. | |
| § 63.7(d) | Testing Facilities | Yes. | |
| § 63.7(e)(1) | Conduct of Performance Tests. | No | See § 63.9621. |
| § 63.7(e)(2)–(4) | Conduct of Performance Tests. | Yes. | |
| § 63.7(f) | Alternative Test Method | Yes. | |
| § 63.7(g) | Data Analysis | Yes | Except this subpart specifies how and when the performance test results are reported. |
| § 63.7(h) | Waiver of Tests | Yes. | |
| § 63.8(a)(1)–(2) | Monitoring Requirements | Yes. | |
| § 63.8(a)(3) | [Reserved] | No. | |
| § 63.8(a)(4) | Additional Monitoring Requirements for Control Devices in § 63.11. | No | Subpart RRRRR does not require flares. |
| § 63.8(b)(1)–(3) | Conduct of Monitoring | Yes. | |
| § 63.8(c)(1)(i) | Operation and Maintenance of CMS. | Yes, on or before the compliance date specified in § 63.9632(b)(4). No, after the compliance date specified in § 63.9632(b)(4). | See § 63.9632 for operation and maintenance requirements for monitoring. See § 63.9600(a) for general duty requirement. |
| § 63.8(c)(1)(ii) | Spare parts for CMS Equipment. | Yes. | |
| § 63.8(c)(1)(iii) | SSM Plan for CMS | Yes, on or before the compliance date specified in § 63.9632(b)(4). No, after the compliance date specified in § 63.9632(b)(4). | |
| § 63.8(c)(2)–(3) | CMS Operation/Maintenance. | Yes. | |
| § 63.8(c)(4) | Frequency of Operation for CMS. | No | Subpart RRRRR specifies requirements for operation of CMS. |
| § 63.8(c)(5)–(8) | CMS Requirements | Yes | CMS requirements in § 63.8(c)(5) and (6) apply only to COMS for dry electrostatic precipitators. |
| § 63.8(d)(1)–(2) | Monitoring Quality Control | Yes. | |
| § 63.8(d)(3) | Monitoring Quality Control | No | See § 63.9632(b)(5). |
| § 63.8(e) | Performance Evaluation of CMS. | Yes. | |
| § 63.8(f)(1)–(5) | Alternative Monitoring Method. | Yes. | |
| § 63.8(f)(6) | Relative Accuracy Test Alternative (RATA). | No | Subpart RRRRR does not require continuous emission monitoring systems. |
| § 63.8(g)(1)–(4) | Data Reduction | Yes. | |
| § 63.8(g)(5) | Data That Cannot Be Used | No | Subpart RRRRR specifies data reduction requirements. |
| § 63.9 | Notification Requirements | Yes | Additional notifications for CMS in § 63.9(g) apply to COMS for dry electrostatic precipitators. |
| § 63.9(k) | Electronic reporting procedures. | Yes | Only as specified in § 63.9(j). |
| § 63.10(a) | Recordkeeping and Reporting, Applicability and General Information. | Yes. | |
| § 63.10(b)(1) | General Recordkeeping Requirements. | Yes. | |
| § 63.10(b)(2)(i) | Records of SSM | No | See § 63.9642 for recordkeeping when there is a deviation from a standard. |

| Citation | Subject | Applies to subpart RRRRR | Explanation |
|---|---|---|---|
| § 63.10(b)(2)(ii) | Recordkeeping of Failures to Meet Standard. | No | See § 63.9642 for recordkeeping of (1) date, time and duration; (2) listing of affected source or equipment, and an estimate of the quantity of each regulated pollutant emitted over the standard; and (3) actions to minimize emissions and correct the failure. |
| § 63.10(b)(2)(iii) | Maintenance Records | Yes. | |
| § 63.10(b)(2)(iv) | Actions Taken to Minimize Emissions During SSM. | No. | |
| § 63.10(b)(2)(v) | Actions Taken to Minimize Emissions During SSM. | No. | |
| § 63.10(b)(2)(vi) | Recordkeeping for CMS Malfunctions. | Yes. | |
| § 63.10(b)(2)(vii)–(xii) | Recordkeeping for CMS | Yes. | |
| § 63.10(b)(2)(xiii) | Records for Relative Accuracy Test. | No | Subpart RRRRR does not require continuous emission monitoring systems. |
| § 63.10(b)(2)(xiv) | Records for Notification | Yes. | |
| § 63.10(b)(3) | Applicability Determinations | Yes. | |
| § 63.10(c)(1)–(6) | Additional Recordkeeping Requirements for Sources with CMS. | Yes. | |
| § 63.10(c)(7)–(8) | Records of Excess Emissions and Parameter Monitoring Exceedances for CMS. | No | Subpart RRRRR specifies recordkeeping requirements. |
| § 63.10(c)(9) | [Reserved] | No. | |
| § 63.10(c)(10)–(14) | CMS Recordkeeping | Yes. | |
| § 63.10(c)(15) | Use of SSM Plan | No. | |
| § 63.10(d)(1)–(2) | General Reporting Requirements. | Yes | Except this subpart specifies how and when the performance test results are reported. |
| § 63.10(d)(3) | Reporting opacity or VE observations. | No | Subpart RRRRR does not have opacity and VE standards that require the use of EPA Method 9 of appendix A–4 to 40 CFR part 60 or EPA Method 22 of appendix A–7 to 40 CFR part 60. |
| § 63.10(d)(5) | SSM Reports | Yes, on or before the compliance date specified in § 63.9641(b)(4). No, after the compliance date specified in § 63.9641(b)(4). | See § 63.9641 for malfunction reporting requirements. |
| § 63.10(e) | Additional Reporting Requirements. | Yes, except a breakdown of the total duration of excess emissions due to startup/shutdown in 63.10(e)(3)(vi)(I) is not required and when the summary report is submitted through CEDRI, the report is not required to be titled ''Summary Report-Gaseous and Opacity Excess Emission and Continuous Monitoring System Performance.''. | The electronic reporting template combines the information from the summary report and excess emission report with the Subpart RRRRR compliance report. |
| § 63.10(f) | Waiver of Recordkeeping or Reporting Requirements. | Yes. | |
| § 63.11 | Control Device and Work Practice Requirements. | No | Subpart RRRRR does not require flares. |
| § 63.12(a)–(c) | State Authority and Delegations. | Yes. | |
| § 63.13(a)–(c) | State/Regional Addresses | Yes. | |
| § 63.14(a)–(t) | Incorporations by Reference | Yes. | |
| § 63.15(a)–(b) | Availability of Information and Confidentiality. | Yes. | |
| § 63.16 | Performance Track Provisions. | Yes. | |

[85 FR 45501, July 28, 2020, as amended at 85 FR 73917, Nov. 19, 2020]

## Subpart SSSSS—National Emission Standards for Hazardous Air Pollutants for Refractory Products Manufacturing

SOURCE: 68 FR 18747, Apr. 16, 2003, unless otherwise noted.

WHAT THIS SUBPART COVERS

### § 63.9780 What is the purpose of this subpart?

This subpart establishes national emission standards for hazardous air pollutants (NESHAP) for refractory products manufacturing facilities. This subpart also establishes requirements to demonstrate initial and continuous compliance with the emission limitations.

### § 63.9782 Am I subject to this subpart?

You are subject to this subpart if you own or operate a refractory products manufacturing facility that is, is located at, or is part of, a major source of hazardous air pollutant (HAP) emissions according to the criteria in paragraphs (a) and (b) of this section.

(a) A refractory products manufacturing facility is a plant site that manufactures refractory products (refractory bricks, refractory shapes, monolithics, kiln furniture, crucibles, and other materials used for lining furnaces and other high temperature process units), as defined in § 63.9824. Refractory products manufacturing facilities typically process raw material by crushing, grinding, and screening; mixing the processed raw materials with binders and other additives; forming the refractory mix into shapes; and drying and firing the shapes.

(b) A major source of HAP is a plant site that emits or has the potential to emit any single HAP at a rate of 9.07 megagrams (10 tons) or more per year or any combination of HAP at a rate of 22.68 megagrams (25 tons) or more per year.

### § 63.9784 What parts of my plant does this subpart cover?

(a) This subpart applies to each new, reconstructed, or existing affected source at a refractory products manufacturing facility.

(b) The existing affected sources are shape dryers, curing ovens, and kilns that are used to manufacture refractory products that use organic HAP; shape preheaters, pitch working tanks, defumers, and coking ovens that are used to produce pitch-impregnated refractory products; kilns that are used to manufacture chromium refractory products; and kilns that are used to manufacture clay refractory products.

(c) The new or reconstructed affected sources are shape dryers, curing ovens, and kilns that are used to manufacture refractory products that use organic HAP; shape preheaters, pitch working tanks, defumers, and coking ovens used to produce pitch-impregnated refractory products; kilns that are used to manufacture chromium refractory products; and kilns that are used to manufacture clay refractory products.

(d) Shape dryers, curing ovens, kilns, coking ovens, defumers, shape preheaters, and pitch working tanks that are research and development (R&D) process units are not subject to the requirements of this subpart. (See definition of *research and development process unit* in § 63.9824).

(e) A source is a new affected source if you began construction of the affected source after June 20, 2002, and you met the applicability criteria at the time you began construction.

(f) An affected source is reconstructed if you meet the criteria as defined in § 63.2.

(g) An affected source is existing if it is not new or reconstructed.

### § 63.9786 When do I have to comply with this subpart?

(a) If you have a new or reconstructed affected source, you must comply with this subpart according to paragraphs (a)(1) and (2) of this section.

(1) If the initial startup of your affected source is before April 16, 2003, then you must comply with the emission limitations for new and reconstructed sources in this subpart no later than April 16, 2003.

(2) If the initial startup of your affected source is after April 16, 2003, then you must comply with the emission limitations for new and reconstructed sources in this subpart upon initial startup of your affected source.

(b) If you have an existing affected source, you must comply with the emission limitations for existing sources no later than April 17, 2006.

(c) You must be in compliance with this subpart when you conduct a performance test on an affected source.

(d) If you have an existing area source that increases its emissions or its potential to emit such that it becomes a major source of HAP, you must be in compliance with this subpart according to paragraphs (d)(1) and (2) of this section.

(1) Any portion of the existing facility that is a new affected source or a new reconstructed source must be in compliance with this subpart upon startup.

(2) All other parts of the existing facility must be in compliance with this subpart by 3 years after the date the area source becomes a major source.

(e) If you have a new area source (i.e., an area source for which construction or reconstruction was commenced after June 20, 2002) that increases its emissions or its potential to emit such that it becomes a major source of HAP, you must be in compliance with this subpart upon initial startup of your affected source as a major source.

(f) You must meet the notification requirements in § 63.9812 according to the schedule in § 63.9812 and in 40 CFR part 63, subpart A. Some of the notifications must be submitted before you are required to comply with the emission limitations in this subpart.

EMISSION LIMITATIONS AND WORK PRACTICE STANDARDS

### § 63.9788 What emission limits, operating limits, and work practice standards must I meet?

(a) You must meet each emission limit in Table 1 to this subpart that applies to you.

(b) You must meet each operating limit in Table 2 to this subpart that applies to you.

(c) You must meet each work practice standard in Table 3 to this subpart that applies to you.

### § 63.9790 What are my options for meeting the emission limits?

To meet the emission limits in Table 1 to this subpart, you must use one or both of the options listed in paragraphs (a) and (b) of this section.

(a) *Emissions control system.* Use an emissions capture and collection system and an add-on air pollution control device (APCD) and demonstrate that the resulting emissions or emissions reductions meet the applicable emission limits in Table 1 to this subpart, and demonstrate that the capture and collection system and APCD meet the applicable operating limits in Table 2 to this subpart.

(b) *Process changes.* Use raw materials that have little or no potential to emit HAP during the refractory products manufacturing process or implement manufacturing process changes and demonstrate that the resulting emissions or emissions reductions meet the applicable emission limits in Table 1 to this subpart without an add-on APCD.

GENERAL COMPLIANCE REQUIREMENTS

### § 63.9792 What are my general requirements for complying with this subpart?

(a) You must be in compliance with the emission limitations (including operating limits and work practice standards) in this subpart at all times, except during periods specified in paragraphs (a)(1) and (2) of this section.

(1) Periods of startup, shutdown, and malfunction.

(2) Periods of scheduled maintenance on a control device that is used on an affected continuous kiln, as specified in paragraph (e) of this section.

(b) Except as specified in paragraph (e) of this section, you must always operate and maintain your affected source, including air pollution control and monitoring equipment, according to the provisions in § 63.6(e)(1)(i). During the period between the compliance date specified for your affected source in § 63.9786 and the date upon which continuous monitoring systems have been installed and validated and any applicable operating limits have been established, you must maintain a log detailing the operation and maintenance of the process and emissions control equipment.

(c) You must develop a written startup, shutdown, and malfunction plan (SSMP) according to the provisions in § 63.6(e)(3).

(d) You must prepare and implement a written operation, maintenance, and monitoring (OM&M) plan according to the requirements in § 63.9794.

(e) If you own or operate an affected continuous kiln and must perform scheduled maintenance on the control device for that kiln, you may bypass the kiln control device and continue operating the kiln upon approval by the Administrator, provided you satisfy the conditions listed in paragraphs (e)(1) through (3) of this section.

(1) You must request approval from the Administrator to bypass the control device while the scheduled maintenance is performed. You must submit a separate request each time you plan to bypass the control device, and your request must include the information specified in paragraphs (e)(1)(i) through (vi) of this section.

(i) Reason for the scheduled maintenance.

(ii) Explanation for why the maintenance cannot be performed when the kiln is shut down.

(iii) Detailed description of the maintenance activities.

(iv) Time required to complete the maintenance.

(v) How you will minimize HAP emissions from the kiln during the period when the control device is out of service.

(vi) How you will minimize the time when the kiln is operating and the control device is out of service for scheduled maintenance.

(2) You must minimize HAP emissions during the period when the kiln is operating and the control device is out of service.

(3) You must minimize the time period during which the kiln is operating and the control device is out of service.

(f) You must be in compliance with the provisions of subpart A of this part, except as noted in Table 11 to this subpart.

[68 FR 18747, Apr. 16, 2003, as amended at 71 FR 20471, Apr. 20, 2006]

### § 63.9794 What do I need to know about operation, maintenance, and monitoring plans?

(a) For each continuous parameter monitoring system (CPMS) required by this subpart, you must develop, implement, make available for inspection, and revise, as necessary, an OM&M plan that includes the information in paragraphs (a)(1) through (13) of this section.

(1) A list and identification of each process and add-on APCD that is required by this subpart to be monitored, the type of monitoring device that will be used, and the operating parameters that will be monitored.

(2) Specifications for the sensor, signal analyzer, and data collection system.

(3) A monitoring schedule that specifies the frequency that the parameter values will be determined and recorded.

(4) The operating limits for each parameter that represent continuous compliance with the emission limitations in § 63.9788, based on values of the monitored parameters recorded during performance tests.

(5) Procedures for installing the CPMS at a measurement location relative to each process unit or APCD such that measurement is representative of control of emissions.

(6) Procedures for the proper operation and routine and long-term maintenance of each process unit and APCD, including a maintenance and inspection schedule that is consistent with the manufacturer's recommendations.

(7) Procedures for the proper operation and maintenance of monitoring equipment consistent with the requirements in §§ 63.8(c)(1), (3), (4)(ii), (7), and (8), and 63.9804.

(8) Ongoing data quality assurance procedures in accordance with the general requirements of § 63.8(d).

(9) Procedures for evaluating the performance of each CPMS.

(10) Procedures for responding to operating parameter deviations, including the procedures in paragraphs (a)(10)(i) through (iii) of this section:

(i) Procedures for determining the cause of the operating parameter deviation.

(ii) Actions for correcting the deviation and returning the operating parameters to the allowable limits.

(iii) Procedures for recording the times that the deviation began and ended, and when corrective actions were initiated and completed.

(11) Procedures for keeping records to document compliance and reporting in accordance with the requirements of § 63.10(c), (e)(1), and (e)(2)(i).

(12) If you operate a kiln that is subject to the limits on the type of fuel used, as specified in items 3 and 4 of Table 3 to subpart SSSSS, procedures for using alternative fuels.

(13) If you operate an affected continuous kiln and you plan to take the kiln control device out of service for scheduled maintenance, as specified in § 63.9792(e), the procedures specified in paragraphs (a)(13)(i) and (ii) of this section.

(i) Procedures for minimizing HAP emissions from the kiln during periods of scheduled maintenance of the kiln control device when the kiln is operating and the control device is out of service.

(ii) Procedures for minimizing any period of scheduled maintenance on the kiln control device when the kiln is operating and the control device is out of service.

(b) Changes to the operating limits in your OM&M plan require a new performance test. If you are revising an operating limit parameter value, you must meet the requirements in paragraphs (b)(1) and (2) of this section.

(1) Submit a Notification of Performance Test to the Administrator as specified in § 63.7(b).

(2) After completing the performance tests to demonstrate that compliance with the emission limits can be achieved at the revised operating limit parameter value, you must submit the performance test results and the revised operating limits as part of the Notification of Compliance Status required under § 63.9(h).

(c) If you are revising the inspection and maintenance procedures in your OM&M plan, you do not need to conduct a new performance test.

TESTING AND INITIAL COMPLIANCE REQUIREMENTS

### § 63.9796 By what date must I conduct performance tests?

You must conduct performance tests within 180 calendar days after the compliance date that is specified for your source in § 63.9786 and according to the provisions in § 63.7(a)(2).

### § 63.9798 When must I conduct subsequent performance tests?

(a) You must conduct a performance test every 5 years following the initial performance test, as part of renewing your 40 CFR part 70 or 40 CFR part 71 operating permit.

(b) You must conduct a performance test when you want to change the parameter value for any operating limit specified in your OM&M plan.

(c) If you own or operate a source that is subject to the emission limits specified in items 2 through 9 of Table 1 to this subpart, you must conduct a performance test on the source(s) listed in paragraphs (c)(1) and (2) of this section before you start production of any refractory product for which the organic HAP processing rate is likely to exceed by more than 10 percent the maximum organic HAP processing rate established during the most recent performance test on that same source.

(1) Each affected shape dryer or curing oven that is used to process the refractory product with the higher organic HAP processing rate.

(2) Each affected kiln that follows an affected shape dryer or curing oven and is used to process the refractory product with the higher organic HAP processing rate.

(d) If you own or operate a kiln that is subject to the emission limits specified in item 5 or 9 of Table 1 to this subpart, you must conduct a performance test on the affected kiln following any process changes that are likely to increase organic HAP emissions from the kiln (e.g., a decrease in the curing cycle time for a curing oven that precedes the affected kiln in the process line).

(e) If you own or operate a clay refractory products kiln that is subject to the emission limits specified in item 10 or 11 of Table 1 to this subpart and is controlled with a dry limestone adsorber (DLA), you must conduct a performance test on the affected kiln following any change in the source of limestone used in the DLA.

**§63.9800 How do I conduct performance tests and establish operating limits?**

(a) You must conduct each performance test in Table 4 to this subpart that applies to you.

(b) Before conducting the performance test, you must install and validate all monitoring equipment.

(c) Each performance test must be conducted according to the requirements in §63.7 and under the specific conditions in Table 4 to this subpart.

(d) You may not conduct performance tests during periods of startup, shutdown, or malfunction, as specified in §63.7(e)(1).

(e) You must conduct separate test runs for at least the duration specified for each performance test required in this section, as specified in §63.7(e)(3) and Table 4 to this subpart.

(f) For batch process sources, you must satisfy the requirements specified in paragraphs (f)(1) through (5) of this section.

(1) You must conduct at least two test runs.

(2) Each test run must last an entire batch cycle unless you develop an emissions profile, as specified in items 8(a)(i)(4) and 17(b)(i)(4) of Table 4 to this subpart, or you satisfy the conditions for terminating a test run prior to the completion of a batch cycle as specified in item 8(a)(i)(5) of Table 4 to this subpart.

(3) Each test run must be performed over a separate batch cycle unless you satisfy the conditions for conducting both test runs over a single batch cycle, as described in paragraphs (f)(3)(i) and (ii) of this section.

(i) You do not produce the product that corresponds to the maximum organic HAP processing rate for that batch process source in consecutive batch cycles.

(ii) To produce that product in two consecutive batch cycles would disrupt production of other refractory products.

(4) If you want to conduct a performance test over a single batch cycle, you must include in your Notification of Performance Test the rationale for testing over a single batch cycle.

(5) If you are granted approval to conduct a performance test over a single batch cycle, you must use paired sampling trains and collect two sets of emissions data. Each set of data can be considered a separate test run.

(g) You must use the data gathered during the performance test and the equations in paragraphs (g)(1) through (3) of this section to determine compliance with the emission limitations.

(1) To determine compliance with the total hydrocarbon (THC) emission concentration limit listed in Table 1 to this subpart, you must calculate your emission concentration corrected to 18 percent oxygen for each test run using Equation 1 of this section:

$$C_{THC-C} = \frac{2.9 \times C_{THC}}{\left(20.9 - C_{O_2}\right)} \qquad \text{(Eq. 1)}$$

Where:

$C_{THC-C}$ = THC concentration, corrected to 18 percent oxygen, parts per million by volume, dry basis (ppmvd)

$C_{THC}$ = THC concentration (uncorrected), ppmvd

$C_{O2}$ = oxygen concentration, percent.

(2) To determine compliance with any of the emission limits based on percentage reduction across an emissions control system specified in Table 1 to this subpart, you must calculate the percentage reduction for each test run using Equation 2 of this section:

$$PR = \frac{ER_i - ER_o}{ER_i} \times 100 \qquad \text{(Eq. 2)}$$

Where:

PR = percentage reduction, percent

$ER_i$ = mass emissions rate of specific HAP or pollutant (THC, HF, or HCl) entering the control device, kilograms (pounds) per hour

$ER_o$ = mass emissions rate of specific HAP or pollutant (THC, HF, or HCl) exiting the control device, kilograms (pounds) per hour.

(3) To determine compliance with production-based hydrogen fluoride (HF) and hydrogen chloride (HCl) emission limits in Table 1 to this subpart, you must calculate your mass emissions per unit of uncalcined clay processed for each test run using Equation 3 of this section:

$$MP = \frac{ER}{P} \qquad \text{(Eq. 3)}$$

Where:

MP = mass per unit of production, kilograms of pollutant per megagram (pounds per ton) of uncalcined clay processed

ER = mass emissions rate of specific HAP (HF or HCl) during each performance test run, kilograms (pounds) per hour

P = average uncalcined clay processing rate for the performance test, megagrams (tons) of uncalcined clay processed per hour.

(h) You must establish each site-specific operating limit in Table 2 to this subpart that applies to you, as specified in Table 4 to this subpart.

(i) For each affected source that is equipped with an add-on APCD that is not addressed in Table 2 to this subpart or that is using process changes as a means of meeting the emission limits in Table 1 to this subpart, you must meet the requirements in § 63.8(f) and paragraphs (i)(1) through (3) of this section.

(1) For sources subject to the THC concentration limit specified in item 3 or 7 of Table 1 to this subpart, you must satisfy the requirements specified in paragraphs (i)(1)(i) through (iii) of this section.

(i) You must install a THC continuous emissions monitoring system (CEMS) at the outlet of the control device or in the stack of the affected source.

(ii) You must meet the requirements specified in Performance Specification (PS) 8 of 40 CFR part 60, appendix B.

(iii) You must meet the requirements specified in Procedure 1 of 40 CFR part 60, appendix F.

(2) For sources subject to the emission limits specified in item 3, 4, 7, or 8 of Table 1 to this subpart, you must submit a request for approval of alternative monitoring methods to the Administrator no later than the submittal date for the Notification of Performance Test, as specified in § 63.9812(d). The request must contain the information specified in paragraphs (i)(2)(i) through (v) of this section.

(i) Description of the alternative add-on APCD or process changes.

(ii) Type of monitoring device or method that will be used, including the sensor type, location, inspection procedures, quality assurance and quality control measures, and data recording device.

(iii) Operating parameters that will be monitored.

(iv) Frequency that the operating parameter values will be determined and recorded to establish continuous compliance with the operating limits.

(v) Averaging time.

(3) You must establish site-specific operating limits during the performance test based on the information included in the approved alternative monitoring methods request and, as applicable, as specified in Table 4 to this subpart.

### § 63.9802 How do I develop an emissions profile?

If you decide to develop an emissions profile for an affected batch process source; as indicated in item 8(a)(i)(4) or 17(b)(i)(4) of Table 4 to this subpart, you must measure and record mass emissions of the applicable pollutant throughout a complete batch cycle of the affected batch process source according to the procedures described in paragraph (a) or (b) of this section.

(a) If your affected batch process source is subject to the THC concentration limit specified in item 6(a), 7(a), 8, or 9 of Table 1 to this subpart or the THC percentage reduction limit specified in item 6(b) or 7(b) of Table 1 to this subpart, you must measure and record the THC mass emissions rate at the inlet to the control device using the test methods, averaging periods, and procedures specified in items 10(a) and (b) of Table 4 to this subpart for each complete hour of the batch process cycle.

(b) If your affected batch process source is subject to the HF and HCl percentage reduction emission limits in item 11 of Table 1 to this subpart, you must measure and record the HF mass emissions rate at the inlet to the control device through a series of 1-hour test runs according to the test method specified in item 14(a) of Table 4 to this subpart for each complete hour of the batch process cycle.

### § 63.9804 What are my monitoring system installation, operation, and maintenance requirements?

(a) You must install, operate, and maintain each CPMS required by this subpart according to your OM&M plan

and the requirements in paragraphs (a)(1) through (15) of this section.

(1) You must satisfy all applicable requirements of performance specifications for CPMS specified in 40 CFR part 60, appendix B, upon promulgation of such performance specifications.

(2) You must satisfy all applicable requirements of quality assurance (QA) procedures for CPMS specified in 40 CFR part 60, appendix F, upon promulgation of such QA procedures.

(3) You must install each sensor of your CPMS in a location that provides representative measurement of the appropriate parameter over all operating conditions, taking into account the manufacturer's guidelines.

(4) You must use a CPMS that is capable of measuring the appropriate parameter over a range that extends from a value of at least 20 percent less than the lowest value that you expect your CPMS to measure, to a value of at least 20 percent greater than the highest value that you expect your CPMS to measure.

(5) You must use a data acquisition and recording system that is capable of recording values over the entire range specified in paragraph (a)(4) of this section.

(6) You must use a signal conditioner, wiring, power supply, and data acquisition and recording system that are compatible with the output signal of the sensors used in your CPMS.

(7) You must perform an initial calibration of your CPMS based on the procedures specified in the manufacturer's owner's manual.

(8) You must use a CPMS that is designed to complete a minimum of one cycle of operation for each successive 15-minute period. To have a valid hour of data, you must have at least three of four equally-spaced data values (or at least 75 percent of the total number of values if you collect more than four data values per hour) for that hour (not including startup, shutdown, malfunction, or out-of-control periods).

(9) You must record valid data from at least 90 percent of the hours during which the affected source or process operates.

(10) You must determine and record the 15-minute block averages of all measurements, calculated after every 15 minutes of operation as the average of the previous 15 operating minutes (not including periods of startup, shutdown, or malfunction).

(11) You must determine and record the 3-hour block averages of all 15-minute recorded measurements, calculated after every 3 hours of operation as the average of the previous 3 operating hours (not including periods of startup, shutdown, or malfunction).

(12) You must record the results of each inspection, calibration, initial validation, and accuracy audit.

(13) At all times, you must maintain your CPMS including, but not limited to, maintaining necessary parts for routine repairs of the CPMS.

(14) You must perform an initial validation of your CPMS under the conditions specified in paragraphs (14)(i) and (ii) of this section.

(i) Prior to the initial performance test on the affected source for which the CPMS is required.

(ii) Within 180 days of your replacing or relocating one or more of the sensors of your CPMS.

(15) Except for redundant sensors, as defined in § 63.9824, any device that you use to conduct an initial validation or accuracy audit of your CPMS must meet the accuracy requirements specified in paragraphs (15)(i) and (ii) of this section.

(i) The device must have an accuracy that is traceable to National Institute of Standards and Technology (NIST) standards.

(ii) The device must be at least three times as accurate as the required accuracy for the CPMS.

(b) For each temperature CPMS that is used to monitor the combustion chamber temperature of a thermal oxidizer or the catalyst bed inlet temperature of a catalytic oxidizer, you must meet the requirements in paragraphs (a) and (b)(1) through (6) of this section.

(1) Use a temperature CPMS with a minimum accuracy of ±1.0 percent of the temperature value or 2.8 degrees Celsius (°C) (5 degrees Fahrenheit (°F)), whichever is greater.

(2) Use a data recording system with a minimum resolution of one-half or better of the required CPMS accuracy

specified in paragraph (b)(1) of this section.

(3) Perform an initial validation of your CPMS according to the requirements in paragraph (3)(i) or (ii) of this section.

(i) Place the sensor of a calibrated temperature measurement device adjacent to the sensor of your temperature CPMS in a location that is subject to the same environment as the sensor of your temperature CPMS. The calibrated temperature measurement device must satisfy the accuracy requirements of paragraph (a)(15) of this section. While the process and control device that is monitored by your CPMS are operating normally, record concurrently and compare the temperatures measured by your temperature CPMS and the calibrated temperature measurement device. Using the calibrated temperature measurement device as the reference, the temperature measured by your CPMS must be within the accuracy specified in paragraph (b)(1) of this section.

(ii) Perform any of the initial validation methods for temperature CPMS specified in performance specifications for CPMS established in 40 CFR part 60, appendix B.

(4) Perform an accuracy audit of your temperature CPMS at least quarterly, according to the requirements in paragraph (b)(4)(i), (ii), or (iii) of this section.

(i) If your temperature CPMS includes a redundant temperature sensor, record three pairs of concurrent temperature measurements within a 24-hour period. Each pair of concurrent measurements must consist of a temperature measurement by each of the two temperature sensors. The minimum time interval between any two such pairs of consecutive temperature measurements is 1 hour. The measurements must be taken during periods when the process and control device that is monitored by your temperature CPMS are operating normally. Calculate the mean of the three values for each temperature sensor. The mean values must agree within the required overall accuracy of the CPMS, as specified in paragraph (b)(1) of this section.

(ii) If your temperature CPMS does not include a redundant temperature sensor, place the sensor of a calibrated temperature measurement device adjacent to the sensor of your temperature CPMS in a location that is subject to the same environment as the sensor of your temperature CPMS. The calibrated temperature measurement device must satisfy the accuracy requirements of paragraph (a)(15) of this section. While the process and control device that is monitored by your temperature CPMS are operating normally, record concurrently and compare the temperatures measured by your CPMS and the calibrated temperature measurement device. Using the calibrated temperature measurement device as the reference, the temperature measured by your CPMS must be within the accuracy specified in paragraph (b)(1) of this section.

(iii) Perform any of the accuracy audit methods for temperature CPMS specified in QA procedures for CPMS established in 40 CFR part 60, appendix F.

(5) Conduct an accuracy audit of your CPMS following any 24-hour period throughout which the temperature measured by your CPMS exceeds the manufacturer's specified maximum operating temperature range, or install a new temperature sensor.

(6) If your CPMS is not equipped with a redundant temperature sensor, perform at least quarterly a visual inspection of all components of the CPMS for integrity, oxidation, and galvanic corrosion.

(c) For each pressure CPMS that is used to monitor the pressure drop across a DLA or wet scrubber, you must meet the requirements in paragraphs (a) and (c)(1) through (7) of this section.

(1) Use a pressure CPMS with a minimum accuracy of ±5.0 percent or 0.12 kilopascals (kPa) (0.5 inches of water column (in. w.c.)), whichever is greater.

(2) Use a data recording system with a minimum resolution of one-half the required CPMS accuracy specified in paragraph (c)(1) of this section, or better.

(3) Perform an initial validation of your pressure CPMS according to the requirements in paragraph (c)(3)(i) or (ii) of this section.

(i) Place the sensor of a calibrated pressure measurement device adjacent to the sensor of your pressure CPMS in a location that is subject to the same environment as the sensor of your pressure CPMS. The calibrated pressure measurement device must satisfy the accuracy requirements of paragraph (a)(15) of this section. While the process and control device that is monitored by your CPMS are operating normally, record concurrently and compare the pressure measured by your CPMS and the calibrated pressure measurement device. Using the calibrated pressure measurement device as the reference, the pressure measured by your CPMS must be within the accuracy specified in paragraph (c)(1) of this section.

(ii) Perform any of the initial validation methods for pressure CPMS specified in performance specifications for CPMS established in 40 CFR part 60, appendix B.

(4) Perform an accuracy audit of your pressure CPMS at least quarterly, according to the requirements in paragraph (c)(4)(i), (ii), or (iii) of this section.

(i) If your pressure CPMS includes a redundant pressure sensor, record three pairs of concurrent pressure measurements within a 24-hour period. Each pair of concurrent measurements must consist of a pressure measurement by each of the two pressure sensors. The minimum time interval between any two such pairs of consecutive pressure measurements is 1 hour. The measurements must be taken during periods when the process and control device that is monitored by your CPMS are operating normally. Calculate the mean of the three pressure measurement values for each pressure sensor. The mean values must agree within the required overall accuracy of the CPMS, as specified in paragraph (c)(1) of this section.

(ii) If your pressure CPMS does not include a redundant pressure sensor, place the sensor of a calibrated pressure measurement device adjacent to the sensor of your pressure CPMS in a location that is subject to the same environment as the sensor of your pressure CPMS. The calibrated pressure measurement device must satisfy the accuracy requirements of paragraph (a)(15) of this section. While the process and control device that is monitored by your pressure CPMS are operating normally, record concurrently and compare the pressure measured by your CPMS and the calibrated pressure measurement device. Using the calibrated pressure measurement device as the reference, the pressure measured by your CPMS must be within the accuracy specified in paragraph (c)(1) of this section.

(iii) Perform any of the accuracy audit methods for pressure CPMS specified in QA procedures for CPMS established in 40 CFR part 60, appendix F.

(5) Conduct an accuracy audit of your CPMS following any 24-hour period throughout which the pressure measured by your CPMS exceeds the manufacturer's specified maximum operating pressure range, or install a new pressure sensor.

(6) At least monthly, check all mechanical connections on your CPMS for leakage.

(7) If your CPMS is not equipped with a redundant pressure sensor, perform at least quarterly a visual inspection of all components of the CPMS for integrity, oxidation, and galvanic corrosion.

(d) For each liquid flow rate CPMS that is used to monitor the liquid flow rate in a wet scrubber, you must meet the requirements in paragraphs (a) and (d)(1) through (7) of this section.

(1) Use a flow rate CPMS with a minimum accuracy of ±5.0 percent or 1.9 liters per minute (L/min) (0.5 gallons per minute (gal/min)), whichever is greater.

(2) Use a data recording system with a minimum resolution of one-half the required CPMS accuracy specified in paragraph (d)(1) of this section, or better.

(3) Perform an initial validation of your CPMS according to the requirements in paragraph (3)(i) or (ii) of this section.

(i) Use a calibrated flow rate measurement system to measure the liquid flow rate in a location that is adjacent to the measurement location for your flow rate CPMS and is subject to the same environment as your flow rate CPMS. The calibrated flow rate measurement device must satisfy the accuracy requirements of paragraph (a)(15)

of this section. While the process and control device that is monitored by your flow rate CPMS are operating normally, record concurrently and compare the flow rates measured by your flow rate CPMS and the calibrated flow rate measurement device. Using the calibrated flow rate measurement device as the reference, the flow rate measured by your CPMS must be within the accuracy specified in paragraph (d)(1) of this section.

(ii) Perform any of the initial validation methods for liquid flow rate CPMS specified in performance specifications for CPMS established in 40 CFR part 60, appendix B.

(4) Perform an accuracy audit of your flow rate CPMS at least quarterly, according to the requirements in paragraph (d)(4)(i), (ii), or (iii) of this section.

(i) If your flow rate CPMS includes a redundant sensor, record three pairs of concurrent flow rate measurements within a 24-hour period. Each pair of concurrent measurements must consist of a flow rate measurement by each of the two flow rate sensors. The minimum time interval between any two such pairs of consecutive flow rate measurements is 1 hour. The measurements must be taken during periods when the process and control device that is monitored by your flow rate CPMS are operating normally. Calculate the mean of the three flow rate measurement values for each flow rate sensor. The mean values must agree within the required overall accuracy of the CPMS, as specified in paragraph (d)(1) of this section.

(ii) If your flow rate CPMS does not include a redundant flow rate sensor, place the sensor of a calibrated flow rate measurement device adjacent to the sensor of your flow rate CPMS in a location that is subject to the same environment as the sensor of your flow rate CPMS. The calibrated flow rate measurement device must satisfy the accuracy requirements of paragraph (a)(15) of this section. While the process and control device that is monitored by your flow rate CPMS are operating normally, record concurrently and compare the flow rate measured by your pressure CPMS and the calibrated flow rate measurement device. Using the calibrated flow rate measurement device as the reference, the flow rate measured by your CPMS must be within the accuracy specified in paragraph (d)(1) of this section.

(iii) Perform any of the accuracy audit methods for liquid flow rate CPMS specified in QA procedures for CPMS established in 40 CFR part 60, appendix F.

(5) Conduct an accuracy audit of your flow rate CPMS following any 24-hour period throughout which the flow rate measured by your CPMS exceeds the manufacturer's specified maximum operating range, or install a new flow rate sensor.

(6) At least monthly, check all mechanical connections on your CPMS for leakage.

(7) If your CPMS is not equipped with a redundant flow rate sensor, perform at least quarterly a visual inspection of all components of the CPMS for integrity, oxidation, and galvanic corrosion.

(e) For each pH CPMS that is used to monitor the pH of a wet scrubber liquid, you must meet the requirements in paragraphs (a) and (e)(1) through (5) of this section.

(1) Use a pH CPMS with a minium accuracy of ±0.2 pH units.

(2) Use a data recording system with a minimum resolution of 0.1 pH units, or better.

(3) Perform an initial validation of your pH CPMS according to the requirements in paragraph (e)(3)(i) or (ii) of this section.

(i) Perform a single-point calibration using an NIST-certified buffer solution that is accurate to within ±0.02 pH units at 25 °C (77 °F). If the expected pH of the liquid that is monitored lies in the acidic range (less than 7 pH), use a buffer solution with a pH value of 4.00. If the expected pH of the liquid that is monitored is neutral or lies in the basic range (equal to or greater than 7 pH), use a buffer solution with a pH value of 10.00. Place the electrode of your pH CPMS in the container of buffer solution. Record the pH measured by your CPMS. Using the certified buffer solution as the reference, the pH measured by your CPMS must be within the accuracy specified in paragraph (e)(1) of this section.

(ii) Perform any of the initial validation methods for pH CPMS specified in performance specifications for CPMS established in 40 CFR part 60, appendix B.

(4) Perform an accuracy audit of your pH CPMS at least weekly, according to the requirements in paragraph (e)(4)(i), (ii), or (iii) of this section.

(i) If your pH CPMS includes a redundant pH sensor, record the pH measured by each of the two pH sensors. The measurements must be taken during periods when the process and control device that is monitored by your pH CPMS are operating normally. The two pH values must agree within the required overall accuracy of the CPMS, as specified in paragraph (e)(1) of this section.

(ii) If your pH CPMS does not include a redundant pH sensor, perform a single point calibration using an NIST-certified buffer solution that is accurate to within ±0.02 pH units at 25 °C (77 °F). If the expected pH of the liquid that is monitored lies in the acidic range (less than 7 pH), use a buffer solution with a pH value of 4.00. If the expected pH of the liquid that is monitored is neutral or lies in the basic range (equal to or greater than 7 pH), use a buffer solution with a pH value of 10.00. Place the electrode of the pH CPMS in the container of buffer solution. Record the pH measured by your CPMS. Using the certified buffer solution as the reference, the pH measured by your CPMS must be within the accuracy specified in paragraph (e)(1) of this section.

(iii) Perform any of the accuracy audit methods for pH CPMS specified in QA procedures for CPMS established in 40 CFR part 60, appendix F.

(5) If your CPMS is not equipped with a redundant pH sensor, perform at least monthly a visual inspection of all components of the CPMS for integrity, oxidation, and galvanic corrosion.

(f) For each bag leak detection system, you must meet the requirements in paragraphs (f)(1) through (11) of this section.

(1) Each triboelectric bag leak detection system must be installed, calibrated, operated, and maintained according to the ''Fabric Filter Bag Leak Detection Guidance'' (EPA–454/R–98–015, September 1997). That document is available from the U.S. EPA; Office of Air Quality Planning and Standards; Emissions, Monitoring and Analysis Division; Emission Measurement Center (D205–02), Research Triangle Park, NC 27711. It is also available on the Technology Transfer Network (TTN) at the following address: *http://www.epa.gov/ttn/emc/cem.html*. Other types of bag leak detection systems must be installed, operated, calibrated, and maintained in a manner consistent with the manufacturer's written specifications and recommendations.

(2) The bag leak detection system must be certified by the manufacturer to be capable of detecting particulate matter (PM) emissions at concentrations of 10 milligrams per actual cubic meter (0.0044 grains per actual cubic foot) or less.

(3) The bag leak detection system sensor must provide an output of relative PM loadings.

(4) The bag leak detection system must be equipped with a device to continuously record the output signal from the sensor.

(5) The bag leak detection system must be equipped with an alarm system that will be engaged automatically when an increase in relative PM emissions over a preset level is detected. The alarm must be located where it is easily recognized by plant operating personnel.

(6) For positive pressure fabric filter systems, a bag leak detector must be installed in each baghouse compartment or cell.

(7) For negative pressure or induced air fabric filters, the bag leak detector must be installed downstream of the fabric filter.

(8) Where multiple detectors are required, the system's instrumentation and alarm may be shared among detectors.

(9) The baseline output must be established by adjusting the range and the averaging period of the device and establishing the alarm set points and the alarm delay time according to section 5.0 of the ''Fabric Filter Bag Leak Detection Guidance.''

(10) Following initial adjustment of the system, the owner or operator must not adjust the sensitivity or

range, averaging period, alarm set points, or alarm delay time except as detailed in the OM&M plan. In no case may the sensitivity be increased by more than 100 percent or decreased by more than 50 percent over a 365-day period unless such adjustment follows a complete fabric filter inspection that demonstrates that the fabric filter is in good operating condition. You must record each adjustment of your bag leak detection system.

(11) Record the results of each inspection, calibration, and validation check.

(g) For each lime feed rate measurement device that is used to monitor the lime feed rate of a dry injection fabric filter (DIFF) or dry lime scrubber/fabric filter (DLS/FF), or the chemical feed rate of a wet scrubber, you must meet the requirements in paragraph (a) of this section.

(h) For each affected source that is subject to the emission limit specified in item 3, 4, 7, or 8 of Table 1 to this subpart, you must satisfy the requirements of paragraphs (h)(1) through (3) of this section.

(1) Install a THC CEMS at the outlet of the control device or in the stack of the affected source.

(2) Meet the requirements of PS–8 of 40 CFR part 60, appendix B.

(3) Meet the requirements of Procedure 1 of 40 CFR part 60, appendix F.

(i) Requests for approval of alternate monitoring methods must meet the requirements in §§ 63.9800(i)(2) and 63.8(f).

### § 63.9806 How do I demonstrate initial compliance with the emission limits, operating limits, and work practice standards?

(a) You must demonstrate initial compliance with each emission limit that applies to you according to the requirements specified in Table 5 to this subpart.

(b) You must establish each site-specific operating limit in Table 2 to this subpart that applies to you according to the requirements specified in § 63.9800 and Table 4 to this subpart.

(c) You must demonstrate initial compliance with each work practice standard that applies to you according to the requirements specified in Table 6 to this subpart.

(d) You must submit the Notification of Compliance Status containing the results of the initial compliance demonstration according to the requirements in § 63.9812(e).

CONTINUOUS COMPLIANCE REQUIREMENTS

### § 63.9808 How do I monitor and collect data to demonstrate continuous compliance?

(a) You must monitor and collect data according to this section.

(b) At all times, you must maintain your monitoring systems including, but not limited to, maintaining necessary parts for routine repairs of the monitoring equipment.

(c) Except for, as applicable, monitoring system malfunctions, associated repairs, and required quality assurance or quality control activities, you must monitor continuously whenever your affected process unit is operating. For purposes of calculating data averages, you must not use data recorded during monitoring system malfunctions, associated repairs, and required quality assurance or quality control activities. You must use all the data collected during all other periods in assessing compliance. A monitoring system malfunction is any sudden, infrequent, not reasonably preventable failure of the monitoring system to provide valid data. Monitoring system malfunctions include out of control continuous monitoring systems (CMS), such as a CPMS. Any averaging period for which you do not have valid monitoring data as a result of a monitoring system malfunction and for which such data are required constitutes a deviation, and you must notify the Administrator in accordance with § 63.9814(e). Monitoring system failures are different from monitoring system malfunctions in that they are caused in part by poor maintenance or careless operation. Any period for which there is a monitoring system failure and data are not available for required calculations constitutes a deviation and you must notify the Administrator in accordance with § 63.9814(e).

### § 63.9810 How do I demonstrate continuous compliance with the emission limits, operating limits, and work practice standards?

(a) You must demonstrate continuous compliance with each emission

limit specified in Table 1 to this subpart that applies to you according to the requirements specified in Table 7 to this subpart.

(b) You must demonstrate continuous compliance with each operating limit specified in Table 2 to this subpart that applies to you according to the requirements specified in Table 8 to this subpart.

(c) You must demonstrate continuous compliance with each work practice standard specified in Table 3 to this subpart that applies to you according to the requirements specified in Table 9 to this subpart.

(d) For each affected source that is equipped with an add-on APCD that is not addressed in Table 2 to this subpart or that is using process changes as a means of meeting the emission limits in Table 1 to this subpart, you must demonstrate continuous compliance with each emission limit in Table 1 to this subpart and each operating limit established as required in §63.9800(i)(3) according to the methods specified in your approved alternative monitoring methods request as described in §63.9800(i)(2).

(e) You must report each instance in which you did not meet each emission limit and each operating limit in this subpart that applies to you. This includes periods of startup, shutdown, and malfunction. These instances are deviations from the emission limitations in this subpart. These deviations must be reported according to the requirements in §63.9814.

(1) [Reserved]

(2) Consistent with §§63.6(e) and 63.7(e)(1), deviations that occur during a period of startup, shutdown, or malfunction are not violations if you demonstrate to the Administrator's satisfaction that you were operating in accordance with §63.6(e)(1) and your OM&M plan. The Administrator will determine whether deviations that occur during a period of startup, shutdown, or malfunction are violations, according to the provisions in §63.6(e).

[68 FR 18747, Apr. 16, 2003, as amended at 71 FR 20471, Apr. 20, 2006]

NOTIFICATIONS, REPORTS, AND RECORDS

### §63.9812 What notifications must I submit and when?

(a) You must submit all of the notifications in §§63.7(b) and (c), 63.8(f)(4), and 63.9 (b) through (e) and (h) that apply to you by the dates specified.

(b) As specified in §63.9(b)(2), if you start up your affected source before April 16, 2003, you must submit an Initial Notification no later than 120 calendar days after April 16, 2003, or no later than 120 days after the source becomes subject to this subpart, whichever is later.

(c) As specified in §63.9(b)(3), if you start up your new or reconstructed affected source on or after April 16, 2003, you must submit an Initial Notification not later than 120 calendar days after you become subject to this subpart.

(d) If you are required to conduct a performance test, you must submit a Notification of Performance Test at least 60 calendar days before the performance test is scheduled to begin, as required in §63.7(b)(1).

(e) If you are required to conduct a performance test, you must submit a Notification of Compliance Status as specified in §63.9(h) and paragraphs (e)(1) and (2) of this section.

(1) For each compliance demonstration that includes a performance test conducted according to the requirements in Table 4 to this subpart, you must submit the Notification of Compliance Status, including the performance test results, before the close of business on the 60th calendar day following the completion of the performance test, according to §63.10(d)(2).

(2) In addition to the requirements in §63.9(h)(2)(i), you must include the information in paragraphs (e)(2)(i) through (iv) of this section in your Notification of Compliance Status.

(i) The operating limit parameter values established for each affected source with supporting documentation and a description of the procedure used to establish the values.

(ii) Design information and analysis with supporting documentation demonstrating conformance with requirements for capture/collection systems in Table 2 to this subpart.

(iii) A description of the methods used to comply with any applicable work practice standard.

(iv) For each APCD that includes a fabric filter, analysis and supporting documentation demonstrating conformance with EPA guidance and specifications for bag leak detection systems in § 63.9804(f).

(f) If you operate a clay refractory products kiln or a chromium refractory products kiln that is subject to the work practice standard specified in item 3 or 4 of Table 3 to this subpart, and you intend to use a fuel other than natural gas or equivalent to fire the affected kiln, you must submit a notification of alternative fuel use within 48 hours of the declaration of a period of natural gas curtailment or supply interruption, as defined in § 63.9824. The notification must include the information specified in paragraphs (f)(1) through (5) of this section.

(1) Company name and address.

(2) Identification of the affected kiln.

(3) Reason you are unable to use natural gas or equivalent fuel, including the date when the natural gas curtailment was declared or the natural gas supply interruption began.

(4) Type of alternative fuel that you intend to use.

(5) Dates when the alternative fuel use is expected to begin and end.

(g) If you own or operate an affected continuous kiln and must perform scheduled maintenance on the control device for that kiln, you must request approval from the Administrator before bypassing the control device, as specified in § 63.9792(e). You must submit a separate request for approval each time you plan to bypass the kiln control device.

[68 FR 58620, Oct. 10, 2003, as amended at 85 FR 73918, Nov. 19, 2020]

### § 63.9814 What reports must I submit and when?

(a) You must submit each report in Table 10 to this subpart that applies to you.

(b) Unless the Administrator has approved a different schedule for submission of reports under § 63.10(a), you must submit each report by the date in Table 10 to this subpart and as specified in paragraphs (b)(1) through (5) of this section.

(1) The first compliance report must cover the period beginning on the compliance date that is specified for your affected source in § 63.9786 and ending on June 30 or December 31 and lasting at least 6 months but less than 12 months. For example, if your compliance date is March 1, then the first semiannual reporting period would begin on March 1 and end on December 31.

(2) The first compliance report must be postmarked or delivered no later than July 31 or January 31 for compliance periods ending on June 30 and December 31, respectively.

(3) Each subsequent compliance report must cover the semiannual reporting period from January 1 through June 30 or the semiannual reporting period from July 1 through December 31.

(4) Each subsequent compliance report must be postmarked or delivered no later than July 31 or January 31 for compliance periods ending on June 30 and December 31, respectively.

(5) For each affected source that is subject to permitting regulations pursuant to 40 CFR part 70 or 40 CFR part 71 and, if the permitting authority has established dates for submitting semiannual reports pursuant to 40 CFR 70.6(a)(3)(iii)(A) or 40 CFR 71.6(a)(3)(iii)(A), you may submit the first and subsequent compliance reports according to the dates the permitting authority has established instead of according to the dates in paragraphs (b)(1) through (4) of this section. In such cases, you must notify the Administrator of this change.

(c) The compliance report must contain the information in paragraphs (c)(1) through (6) of this section.

(1) Company name and address.

(2) Statement by a responsible official with that official's name, title, and signature, certifying that, based on information and belief formed after reasonable inquiry, the statements and information in the report are true, accurate, and complete.

(3) Date of report and beginning and ending dates of the reporting period.

(4) If you had a startup, shutdown, or malfunction during the reporting period, and you took actions consistent with your SSMP and OM&M plan, the compliance report must include the information specified in §63.10(d)(5)(i).

(5) If there are no deviations from any emission limitations (emission limit, operating limit, or work practice standard) that apply to you, the compliance report must include a statement that there were no deviations from the emission limitations during the reporting period.

(6) If there were no periods during which any affected CPMS was out of control as specified in §63.8(c)(7), the compliance report must include a statement that there were no periods during which the CPMS was out of control during the reporting period.

(d) For each deviation from an emission limitation (emission limit, operating limit, or work practice standard) that occurs at an affected source where you are not using a CPMS to comply with the emission limitations in this subpart, the compliance report must contain the information in paragraphs (c)(1) through (4) and (d)(1) and (2) of this section. This includes periods of startup, shutdown, and malfunction.

(1) The compliance report must include the total operating time of each affected source during the reporting period.

(2) The compliance report must include information on the number, duration, and cause of deviations (including unknown cause, if applicable) and the corrective action taken.

(e) For each deviation from an emission limitation (emission limit, operating limit, or work practice standard) occurring at an affected source where you are using a CPMS to comply with the emission limitation in this subpart, the compliance report must include the information in paragraphs (c)(1) through (4) and (e)(1) through (13) of this section. This includes periods of startup, shutdown, and malfunction.

(1) The total operating time of each affected source during the reporting period.

(2) The date and time that each startup, shutdown, or malfunction started and stopped.

(3) The date, time, and duration that each CPMS was inoperative.

(4) The date, time and duration that each CPMS was out of control, including the information in §63.8(c)(8), as required by your OM&M plan.

(5) The date and time that each deviation from an emission limitation (emission limit, operating limit, or work practice standard) started and stopped, and whether each deviation occurred during a period of startup, shutdown, or malfunction.

(6) A description of corrective action taken in response to a deviation.

(7) A summary of the total duration of the deviations during the reporting period and the total duration as a percentage of the total source operating time during that reporting period.

(8) A breakdown of the total duration of the deviations during the reporting period into those that are due to startup, shutdown, control equipment problems, process problems, other known causes, and other unknown causes.

(9) A summary of the total duration of CPMS downtime during the reporting period and the total duration of CPMS downtime as a percentage of the total source operating time during that reporting period.

(10) A brief description of the process units.

(11) A brief description of the CPMS.

(12) The date of the latest CPMS initial validation or accuracy audit.

(13) A description of any changes in CPMS, processes, or controls since the last reporting period.

(f) If you have obtained a title V operating permit pursuant to 40 CFR part 70 or 40 CFR part 71, you must report all deviations as defined in this subpart in the semiannual monitoring report required by 40 CFR 70.6(a)(3)(iii)(A) or 40 CFR 71.6(a)(3)(iii)(A). If you submit a compliance report according to Table 10 to this subpart along with, or as part of, the semiannual monitoring report required by 40 CFR 70.6(a)(3)(iii)(A) or 40 CFR 71.6(a)(3)(iii)(A), and the compliance report includes all required information concerning deviations from any emission limitation (including any operating limit), then submitting the compliance report will satisfy any obligation to report the same deviations in the semiannual monitoring report.

However, submitting a compliance report will not otherwise affect any obligation you may have to report deviations from permit requirements to the permit authority.

(g) If you operate a clay refractory products kiln or a chromium refractory products kiln that is subject to the work practice standard specified in item 3 or 4 of Table 3 to this subpart, and you use a fuel other than natural gas or equivalent to fire the affected kiln, you must submit a report of alternative fuel use within 10 working days after terminating the use of the alternative fuel. The report must include the information in paragraphs (g)(1) through (6) of this section.

(1) Company name and address.

(2) Identification of the affected kiln.

(3) Reason for using the alternative fuel.

(4) Type of alternative fuel used to fire the affected kiln.

(5) Dates that the use of the alternative fuel started and ended.

(6) Amount of alternative fuel used.

### § 63.9816 What records must I keep?

(a) You must keep the records listed in paragraphs (a)(1) through (3) of this section.

(1) A copy of each notification and report that you submitted to comply with this subpart, including all documentation supporting any Initial Notification or Notification of Compliance Status that you submitted, according to the requirements in § 63.10(b)(2)(xiv).

(2) The records in § 63.6(e)(3)(iii) through (v) related to startup, shutdown, and malfunction.

(3) Records of performance tests as required in § 63.10(b)(2)(viii).

(b) You must keep the records required in Tables 7 through 9 to this subpart to show continuous compliance with each emission limitation that applies to you.

(c) You must also maintain the records listed in paragraphs (c)(1) through (10) of this section.

(1) Records of emission data used to develop an emissions profile, as indicated in items 8(a)(i)(4) and 17(b)(i)(4) of Table 4 to this subpart.

(2) Records that document how you comply with any applicable work practice standard.

(3) For each bag leak detection system, records of each alarm, the time of the alarm, the time corrective action was initiated and completed, and a brief description of the cause of the alarm and the corrective action taken.

(4) For each kiln controlled with a DLA, records that document the source of limestone used.

(5) For each deviation of an operating limit parameter value, the date, time, and duration of the deviation, a brief explanation of the cause of the deviation and the corrective action taken, and whether the deviation occurred during a period of startup, shutdown, or malfunction.

(6) For each affected source, records of production rate on a process throughput basis (either feed rate to the process unit or discharge rate from the process unit).

(7) Records of any approved alternative monitoring method(s) or test procedure(s).

(8) Records of maintenance activities and inspections performed on control devices, including all records associated with the scheduled maintenance of continuous kiln control devices, as specified in § 63.9792(e).

(9) If you operate a source that is subject to the THC emission limits specified in item 2, 3, 6, or 7 of Table 1 to this subpart and is controlled with a catalytic oxidizer, records of annual checks of catalyst activity levels and subsequent corrective actions.

(10) Current copies of the SSMP and the OM&M plan, including any revisions and records documenting conformance with those revisions.

### § 63.9818 In what form and how long must I keep my records?

(a) Your records must be in a form suitable and readily available for expeditious review, according to § 63.10(b)(1).

(b) As specified in § 63.10(b)(1), you must keep each record for 5 years following the date of each occurrence, measurement, maintenance, corrective action, report, or record.

(c) You must keep each record onsite for at least 2 years after the date of each occurrence, measurement, maintenance, corrective action, report, or record, according to § 63.10(b)(1). You

may keep the records offsite for the remaining 3 years.

OTHER REQUIREMENTS AND INFORMATION

### § 63.9820 What parts of the General Provisions apply to me?

Table 11 to this subpart shows which parts of the General Provisions specified in §§ 63.1 through 63.15 apply to you.

### § 63.9822 Who implements and enforces this subpart?

(a) This subpart can be implemented and enforced by us, the U.S. Environmental Protection Agency (U.S. EPA), or a delegated authority such as your State, local, or tribal agency. If the U.S. EPA Administrator has delegated authority to your State, local, or tribal agency, then that agency, in addition to the U.S. EPA, has the authority to implement and enforce this subpart. You should contact your U.S. EPA Regional Office to find out if implementation and enforcement to this subpart is delegated to your State, local, or tribal agency.

(b) In delegating implementation and enforcement authority to this subpart to a State, local, or tribal agency under 40 CFR part 63, subpart E, the authorities contained in paragraph (c) of this section are retained by the Administrator of the U.S. EPA and are not transferred to the State, local, or tribal agency.

(c) The authorities that cannot be delegated to State, local, or tribal agencies are as specified in paragraphs (c)(1) through (4) of this section.

(1) Approval of alternatives to the applicability requirements in §§ 63.9782 and 63.9784, the compliance date requirements in § 63.9786, and the emission limitations in § 63.9788.

(2) Approval of major changes to test methods under § 63.7(e)(2)(ii) and (f) and as defined in § 63.90.

(3) Approval of major changes to monitoring under § 63.8(f) and as defined in § 63.90.

(4) Approval of major changes to recordkeeping and reporting under § 63.10(f) and as defined in § 63.90.

### § 63.9824 What definitions apply to this subpart?

Terms used in this subpart are defined in the Clean Air Act, in 40 CFR 63.2, the General Provisions of this part, and in this section as follows:

*Additive* means a minor addition of a chemical, mineral, or metallic substance that is added to a refractory mixture to facilitate processing or impart specific properties to the final refractory product.

*Add-on air pollution control device (APCD)* means equipment installed on a process vent that reduces the quantity of a pollutant that is emitted to the air.

*Autoclave* means a vessel that is used to impregnate fired and/or unfired refractory shapes with pitch to form pitch-impregnated refractory products. Autoclaves also can be used as defumers following the impregnation process.

*Bag leak detection system* means an instrument that is capable of monitoring particulate matter loadings in the exhaust of a fabric filter in order to detect bag failures. A bag leak detection system includes, but is not limited to, an instrument that operates on triboelectric, light-scattering, light-transmittance, or other effects to monitor relative PM loadings.

*Basket* means the metal container used to hold refractory shapes for pitch impregnation during the shape preheating, impregnation, defuming, and, if applicable, coking processes.

*Batch process* means a process in which a set of refractory shapes is acted upon as a single unit according to a predetermined schedule, during which none of the refractory shapes being processed are added or removed. A batch process does not operate continuously.

*Binder* means a substance added to a granular material to give it workability and green or dry strength.

*Catalytic oxidizer* means an add-on air pollution control device that is designed specifically to destroy organic compounds in a process exhaust gas stream by catalytic incineration. A catalytic oxidizer includes a bed of catalyst media through which the process exhaust stream passes to promote combustion and incineration at a lower

temperature than would be possible without the catalyst.

*Chromium refractory product* means a refractory product that contains at least 1 percent chromium by weight.

*Clay refractory product* means a refractory product that contains at least 10 percent uncalcined clay by weight prior to firing in a kiln. In this definition, the term ''clay'' means any of the following six classifications of clay defined by the U.S. Geologic Survey: ball clay, bentonite, common clay and shale, fire clay, fuller's earth, and kaolin.

*Coking oven* means a thermal process unit that operates at a peak temperature typically between 540° and 870 °C (1000° and 1600 °F) and is used to drive off the volatile constituents of pitch-impregnated refractory shapes under a reducing or oxygen-deprived atmosphere.

*Continuous parameter monitoring system (CPMS)* means the total equipment that is used to measure and record temperature, pressure, liquid flow rate, gas flow rate, or pH on a continuous basis in one or more locations. ''Total equipment'' includes the sensor, mechanical components, electronic components, data acquisition system, data recording system, electrical wiring, and other components of a CPMS.

*Continuous process* means a process that operates continuously. In a continuous process unit, the materials or shapes that are processed are either continuously charged (fed) to and discharged from the process unit, or are charged and discharged at regular time intervals without the process unit being shut down. Continuous thermal process units, such as tunnel kilns, generally include temperature zones that are maintained at relatively constant temperature and through which the materials or shapes being processed are conveyed continuously or at regular time intervals.

*Curing oven* means a thermal process unit that operates at a peak temperature typically between 90° and 340 °C (200° and 650 °F) and is used to activate a thermosetting resin, pitch, or other binder in refractory shapes. Curing ovens also perform the same function as shape dryers in removing the free moisture from refractory shapes.

*Defumer* means a process unit that is used for holding pitch-impregnated refractory shapes as the shapes defume or cool immediately following the impregnation process. This definition includes autoclaves that are opened and exhausted to the atmosphere following an impregnation cycle and used for holding pitch-impregnated refractory shapes while the shapes defume or cool.

*Deviation* means any instance in which an affected source subject to this subpart, or an owner or operator of such a source:

(1) Fails to meet any requirement or obligation established by this subpart including, but not limited to, any emission limitation (emission limit, operating limit, or work practice standard);

(2) Fails to meet any term or condition that is adopted to implement an applicable requirement in this subpart for any affected source required to obtain such a permit; or

(3) Fails to meet any emission limitation (emission limit, operating limit, or work practice standard) in this subpart during startup, shutdown, or malfunction, regardless of whether or not such failure is permitted by this subpart.

*Dry injection fabric filter (DIFF)* means an add-on air pollution control device that includes continuous injection of hydrated lime or other sorbent into a duct or reaction chamber followed by a fabric filter.

*Dry lime scrubber/fabric filter (DLS/FF)* means an add-on air pollution control device that includes continuous injection of humidified hydrated lime or other sorbent into a reaction chamber followed by a fabric filter. These systems may include recirculation of some of the sorbent.

*Dry limestone adsorber (DLA)* means an air pollution control device that includes a limestone storage bin, a reaction chamber that is essentially a packed-tower filled with limestone, and may or may not include a peeling drum that mechanically scrapes reacted limestone to regenerate the stone for reuse.

*Emission limitation* means any restriction on the emissions a process unit may discharge.

*Fabric filter* means an add-on air pollution control device used to capture

particulate matter by filtering a process exhaust stream through a filter or filter media; a fabric filter is also known as a baghouse.

*Fired refractory shape* means a refractory shape that has been fired in a kiln.

*HAP* means any hazardous air pollutant that appears in section 112(b) of the Clean Air Act.

*Kiln* means a thermal process unit that operates at a peak temperature greater than 820 °C (1500 °F) and is used for firing or sintering refractory, ceramic, or other shapes.

*Kiln furniture* means any refractory shape that is used to hold, support, or position ceramic or refractory products in a kiln during the firing process.

*Maximum organic HAP processing rate* means the combination of process and refractory product formulation that has the greatest potential to emit organic HAP. The maximum organic HAP processing rate is a function of the organic HAP processing rate, process operating temperature, and other process operating parameters that affect emissions of organic HAP. (See also the definition of *organic HAP processing rate.*)

*Organic HAP processing rate* means the rate at which the mass of organic HAP materials contained in refractory shapes are processed in an affected thermal process unit. The organic HAP processing rate is a function of the amount of organic HAP contained in the resins, binders, and additives used in a refractory mix; the amounts of those resins, binders, and additives in the refractory mix; and the rate at which the refractory shapes formed from the refractory mix are processed in an affected thermal process unit. For continuous process units, the organic HAP processing rate is expressed in units of mass of organic HAP per unit of time (e.g., pounds per hour). For batch process units, the organic HAP processing rate is expressed in units of mass of organic HAP per unit mass of refractory shapes processed during the batch process cycle (e.g., pounds per ton).

*Particulate matter (PM)* means, for the purposes of this subpart, emissions of particulate matter that serve as a measure of total particulate emissions as measured by EPA Method 5 of 40 CFR part 60, appendix A.

*Peak emissions period* means the period of consecutive hourly mass emissions of the applicable pollutant that is greater than any other period of consecutive hourly mass emissions for the same pollutant over the course of a specified batch process cycle, as defined in paragraphs (1) and (2) of this definition. The peak emissions period is a function of the rate at which the temperature of the refractory shapes is increased, the mass and loading configuration of the shapes in the process unit, the constituents of the refractory mix, and the type of pollutants emitted.

(1) The 3-hour peak THC emissions period is the period of 3 consecutive hours over which the sum of the hourly THC mass emissions rates is greater than the sum of the hourly THC mass emissions rates for any other period of 3 consecutive hours during the same batch process cycle.

(2) The 3-hour peak HF emissions period is the period of 3 consecutive hours over which the sum of the hourly HF mass emissions rates is greater than the sum of the hourly HF mass emissions rates for any other period of 3 consecutive hours during the same batch process cycle.

*Period of natural gas curtailment or supply interruption* means a period of time during which the supply of natural gas to an affected facility is halted for reasons beyond the control of the facility. An increase in the cost or unit price of natural gas does not constitute a period of natural gas curtailment or supply interruption.

*Pitch* means the residue from the distillation of petroleum or coal tar.

*Pitch-bonded refractory product* means a formed refractory product that is manufactured using pitch as a bonding agent. Pitch-bonded refractory products are manufactured by mixing pitch with magnesium oxide, graphite, alumina, silicon carbide, silica, or other refractory raw materials, and forming the mix into shapes. After forming, pitch-bonded refractory products are cured in a curing oven and may be subsequently fired in a kiln.

*Pitch-impregnated refractory product* means a refractory shape that has been

fired in a kiln, then impregnated with heated coal tar or petroleum pitch under pressure. After impregnation, pitch-impregnated refractory shapes may undergo the coking process in a coking oven. The total carbon content of a pitch-impregnated refractory product is less than 50 percent.

*Pitch working tank* means a tank that is used for heating pitch to the impregnation temperature, typically between 150° and 260 °C (300° and 500 °F); temporarily storing heated pitch between impregnation cycles; and transferring pitch to and from the autoclave during the impregnation step in manufacturing pitch-impregnated refractory products.

*Plant site* means all contiguous or adjoining property that is under common control, including properties that are separated only by a road or other public right-of-way. Common control includes properties that are owned, leased, or operated by the same entity, parent entity, subsidiary, or any combination thereof.

*Redundant sensor* means a second sensor or a back-up sensor that is integrated into a CPMS and is used to check the parameter value (e.g., temperature, pressure) measured by the primary sensor of the CPMS.

*Refractory product* means nonmetallic materials containing less than 50 percent carbon by weight and having those chemical and physical properties that make them applicable for structures, or as components of systems, that are exposed to environments above 538 °C (1000 °F). This definition includes, but is not limited to: refractory bricks, kiln furniture, crucibles, refractory ceramic fiber, and other materials used as linings for boilers, kilns, and other processing units and equipment where extremes of temperature, corrosion, and abrasion would destroy other materials.

*Refractory products that use organic HAP* means resin-bonded refractory products, pitch-bonded refractory products, and other refractory products that are produced using a substance that is an organic HAP, that releases an organic HAP during production of the refractory product, or that contains an organic HAP, such as methanol or ethylene glycol.

*Refractory shape* means any refractory piece forming a stable mass with specific dimensions.

*Research and development process unit* means any process unit whose purpose is to conduct research and development for new processes and products and is not engaged in the manufacture of products for commercial sale, except in a de minimis manner.

*Resin-bonded refractory product* means a formed refractory product that is manufactured using a phenolic resin or other type of thermosetting resin as a bonding agent. Resin-bonded refractory products are manufactured by mixing resin with alumina, magnesium oxide, graphite, silica, zirconia, or other refractory raw materials, and forming the mix into shapes. After forming, resin-bonded refractory products are cured in a curing oven and may be subsequently fired in a kiln.

*Responsible official* means one of the following:

(1) For a corporation: a president, secretary, treasurer, or vice-president of the corporation in charge of a principal business function, or any other person who performs similar policy or decisionmaking functions for the corporation, or a duly authorized representative of such person if the representative is responsible for the overall operation of one or more manufacturing, production, or operating facilities applying for or subject to a permit and either:

(i) The facilities employ more than 250 persons or have gross annual sales or expenditures exceeding $25 million (in second quarter 1980 dollars); or

(ii) The delegation of authority to such representatives is approved in advance by the Administrator;

(2) For a partnership or sole proprietorship: a general partner or the proprietor, respectively;

(3) For a municipality, State, Federal, or other public agency: either a principal executive officer or ranking elected official. For the purposes of this part, a principal executive officer of a Federal agency includes the chief executive officer having responsibility for the overall operations of a principal geographic unit of the agency (e.g., a Regional Administrator of EPA); or

(4) For affected sources (as defined in this subpart) applying for or subject to a title V permit: ''responsible official'' shall have the same meaning as defined in part 70 or Federal title V regulations in this chapter (42 U.S.C. 7661), whichever is applicable.

*Shape dryer* means a thermal process unit that operates at a peak temperature typically between 40° and 700 °C (100° and 1300 °F) and is used exclusively to reduce the free moisture content of a refractory shape. Shape dryers generally are the initial thermal process step following the forming step in refractory products manufacturing. (See also the definition of a *curing oven*.)

*Shape preheater* means a thermal process unit that operates at a peak temperature typically between 180° and 320 °C (350° and 600 °F) and is used to heat fired refractory shapes prior to the impregnation step in manufacturing pitch-impregnated refractory products.

*Thermal oxidizer* means an add-on air pollution control device that includes one or more combustion chambers and is designed specifically to destroy organic compounds in a process exhaust gas stream by incineration.

*Uncalcined clay* means clay that has not undergone thermal processing in a calciner.

*Wet scrubber* means an add-on air pollution control device that removes pollutants from a gas stream by bringing them into contact with a liquid, typically water.

*Work practice standard* means any design, equipment, work practice, or operational standard, or combination thereof, that is promulgated pursuant to section 112(h) of the Clean Air Act.

TABLE 1 TO SUBPART SSSSS OF PART 63—EMISSION LIMITS

As stated in §63.9788, you must comply with the emission limits for affected sources in the following table:

| For . . . | You must meet the following emission limits . . . |
|---|---|
| 1. Each new or existing curing oven, shape dryer, and kiln that is used to process refractory products that use organic HAP; each new or existing coking oven and defumer that is used to produce pitch-impregnated refractory products; each new shape preheater that is used to produce pitch-impregnated refractory products; AND each new or existing process unit that is exhausted to a thermal or catalytic oxidizer that also controls emissions from an affected shape preheater or pitch working tank. | As specified in items 2 through 9 of this table. |
| 2. Continuous process units that are controlled with a thermal or catalytic oxidizer. | a. The 3-hour block average THC concentration must not exceed 20 parts per million by volume, dry basis (ppmvd), corrected to 18 percent oxygen, at the outlet of the control device; or<br>b. The 3-hour block average THC mass emissions rate must be reduced by at least 95 percent. |
| 3. Continuous process units that are equipped with a control device other than a thermal or catalytic oxidizer. | a. The 3-hour block average THC concentration must not exceed 20 ppmvd, corrected to 18 percent oxygen, at the outlet of the control device; or<br>b. The 3-hour block average THC mass emissions rate must be reduced by at least 95 percent. |
| 4. Continuous process units that use process changes to reduce organic HAP emissions. | The 3-hour block average THC concentration must not exceed 20 ppmvd, corrected to 18 percent oxygen, at the outlet of the process gas stream. |
| 5. Continuous kilns that are not equipped with a control device | The 3-hour block average THC concentration must not exceed 20 ppmvd, corrected to 18 percent oxygen, at the outlet of the process gas stream. |
| 6. Batch process units that are controlled with a thermal or catalytic oxidizer. | a. The 2-run block average THC concentration for the 3-hour peak emissions period must not exceed 20 ppmvd, corrected to 18 percent oxygen, at the outlet of the control device; or<br>b. The 2-run block average THC mass emissions rate for the 3-hour peak emissions period must be reduced by at least 95 percent. |
| 7. Batch process units that are equipped with a control device other than a thermal or catalytic oxidizer. | a. The 2-run block average THC concentration for the 3-hour peak emissions period must not exceed 20 ppmvd, corrected to 18 percent oxygen, at the outlet of the control device; or |

| For . . . | You must meet the following emission limits . . . |
|---|---|
| | b. The 2-run block average THC mass emissions rate for the 3-hour peak emissions period must be reduced by at least 95 percent. |
| 8. Batch process units that use process changes to reduce organic HAP emissions. | The 2-run block average THC concentration for the 3-hour peak emissions period must not exceed 20 ppmvd, corrected to 18 percent oxygen, at the outlet of the process gas stream. |
| 9. Batch process kilns that are not equipped with a control device. | The 2-run block average THC concentration for the 3-hour peak emissions period must not exceed 20 ppmvd, corrected to 18 percent oxygen, at the outlet of the process gas stream. |
| 10. Each new continuous kiln that is used to produce clay refractory products. | a. The 3-hour block average HF emissions must not exceed 0.019 kilograms per megagram (kg/Mg) (0.038 pounds per ton (lb/ton)) of uncalcined clay processed, OR the 3-hour block average HF mass emissions rate must be reduced by at least 90 percent; and<br>b. The 3-hour block average HCl emissions must not exceed 0.091 kg/Mg (0.18 lb/ton) of uncalcined clay processed, OR the 3-hour block average HCl mass emissions rate must be reduced by at least 30 percent. |
| 11. Each new batch process kiln that is used to produce clay refractory products. | a. The 2-run block average HF mass emissions rate for the 3-hour peak emissions period must be reduced by at least 90 percent; and<br>b. The 2-run block average HCl mass emissions rate for the 3-hour peak emissions period must be reduced by at least 30 percent. |

## TABLE 2 TO SUBPART SSSSS OF PART 63—OPERATING LIMITS

As stated in § 63.9788, you must comply with the operating limits for affected sources in the following table:]

| For . . . | You must . . . |
|---|---|
| 1. Each affected source listed in Table 1 to this subpart ..... | a. Operate all affected sources according to the requirements to this subpart on and after the date on which the initial performance test is conducted or required to be conducted, whichever date is earlier; and<br>b. Capture emissions and vent them through a closed system; and<br>c. Operate each control device that is required to comply with this subpart on each affected source during all periods that the source is operating, except where specified in § 63.9792(e), item 2 of this table, and item 13 of Table 4 to this subpart; and<br>d. Record all operating parameters specified in Table 8 to this subpart for the affected source; and<br>e. Prepare and implement a written OM&M plan as specified in § 63.9792(d). |
| 2. Each affected continuous kiln that is equipped with an emission control device. | a. Receive approval from the Administrator before taking the control device on the affected kiln out of service for scheduled maintenance, as specified in § 63.9792(e); and<br>b. Minimize HAP emissions from the affected kiln during all periods of scheduled maintenance of the kiln control device when the kiln is operating and the control device is out of service; and<br>c. Minimize the duration of all periods of scheduled maintenance of the kiln control device when the kiln is operating and the control device is out of service. |
| 3. Each new or existing curing oven, shape dryer, and kiln that is used to process refractory products that use organic HAP; each new or existing coking oven and defumer that is used to produce pitch-impregnated refractory products; each new shape preheater that is used to produce pitch-impregnated refractory products; AND each new or existing process unit that is exhausted to a thermal or catalytic oxidizer that also controls emissions from an affected shape preheater or pitch working tank. | Satisfy the applicable operating limits specified in items 4 through 9 of this table. |
| 4. Each affected continuous process unit ..... | Maintain the 3-hour block average organic HAP processing rate (pounds per hour) at or below the maximum organic HAP processing rate established during the most recent performance test. |

| For . . . | You must . . . |
|---|---|
| 5. Continuous process units that are equipped with a thermal oxidizer. | Maintain the 3-hour block average operating temperature in the thermal oxidizer combustion chamber at or above the minimum allowable operating temperature for the oxidizer established during the most recent performance test. |
| 6. Continuous process units that are equipped with a catalytic oxidizer. | a. Maintain the 3-hour block average operating temperature at the inlet of the catalyst bed of the oxidizer at or above the minimum allowable operating temperature for the oxidizer established during the most recent performance test; and<br>b. Check the activity level of the catalyst at least every 12 months. |
| 7. Each affected batch process unit ..... | For each batch cycle, maintain the organic HAP processing rate (pounds per batch) at or below the maximum organic HAP processing rate established during the most recent performance test. |
| 8. Batch process units that are equipped with a thermal oxidizer. | a. From the start of each batch cycle until 3 hours have passed since the process unit reached maximum temperature, maintain the hourly average operating temperature in the thermal oxidizer combustion chamber at or above the minimum allowable operating temperature established for the corresponding period during the most recent performance test, as determined according to item 11 of Table 4 to this subpart; and<br>b. For each subsequent hour of the batch cycle, maintain the hourly average operating temperature in the thermal oxidizer combustion chamber at or above the minimum allowable operating temperature established for the corresponding hour during the most recent performance test, as specified in item 13 of Table 4 to this subpart. |
| 9. Batch process units that are equipped with a catalytic oxidizer. | a. From the start of each batch cycle until 3 hours have passed since the process unit reached maximum temperature, maintain the hourly average operating temperature at the inlet of the catalyst bed at or above the minimum allowable operating temperature established for the corresponding period during the most recent performance test, as determined according to item 12 of Table 4 to this subpart; and<br>b. For each subsequent hour of the batch cycle, maintain the hourly average operating temperature at the inlet of the catalyst bed at or above the minimum allowable operating temperature established for the corresponding hour during the most recent performance test, as specified in item 13 of Table 4 to this subpart; and<br>c. Check the activity level of the catalyst at least every 12 months. |
| 10. Each new kiln that is used to process clay refractory products. | Satisfy the applicable operating limits specified in items 11 through 13 of this table. |
| 11. Each affected kiln that is equipped with a DLA ..... | a. Maintain the 3-hour block average pressure drop across the DLA at or above the minimum levels established during the most recent performance test; and<br>b. Maintain free-flowing limestone in the feed hopper, silo, and DLA at all times; and<br>c. Maintain the limestone feeder at or above the level established during the most recent performance test; and<br>d. Use the same grade of limestone from the same source as was used during the most recent performance test and maintain records of the source and type of limestone used. |
| 12. Each affected kiln that is equipped with a DIFF or DLS/FF | a. Initiate corrective action within 1 hour of a bag leak detection system alarm and complete corrective actions in accordance with the OM&M plan; and<br>b. Verify at least once each 8-hour shift that lime is free-flowing by means of a visual check, checking the output of a load cell, carrier gas/lime flow indicator, or carrier gas pressure drop measurement system; and<br>c. Record the lime feeder setting daily to verify that the feeder setting is at or above the level established during the most recent performance test. |
| 13. Each affected kiln that is equipped with a wet scrubber ..... | a. Maintain the 3-hour block average pressure drop across the scrubber, liquid pH, and liquid flow rate at or above the minimum levels established during the most recent performance test; and<br>b. If chemicals are added to the scrubber liquid, maintain the 3-hour block average chemical feed rate at or above the minimum chemical feed rate established during the most recent performance test. |

TABLE 3 TO SUBPART SSSSS OF PART 63—WORK PRACTICE STANDARDS

As stated in §63.9788, you must comply with the work practice standards for affected sources in the following table:

| For . . . | You must . . . | According to one of the following requirements . . . |
|---|---|---|
| 1. Each basket or container that is used for holding fired refractory shapes in an existing shape preheater and autoclave during the pitch impregnation process. | a. Control POM emissions from any affected shape preheater. | i. At least every 10 preheating cycles, clean the residual pitch from the surfaces of the basket or container by abrasive blasting prior to placing the basket or container in the affected shape preheater; or<br>ii. At least every 10 preheating cycles, subject the basket or container to a thermal process cycle that meets or exceeds the operating temperature and cycle time of the affected preheater, AND is conducted in a process unit that is exhausted to a thermal or catalytic oxidizer that is comparable to the control device used on an affected defumer or coking oven; or<br>iii. Capture emissions from the affected shape preheater and vent them to the control device that is used to control emissions from an affected defumer or coking oven, or to a comparable thermal or catalytic oxidizer. |
| 2. Each new or existing pitch working tank. | Control POM emissions ..... | Capture emissions from the affected pitch working tank and vent them to the control device that is used to control emissions from an affected defumer or coking oven, OR to a comparable thermal or catalytic oxidizer. |
| 3. Each new or existing chromium refractory products kiln. | Minimize fuel-based HAP emissions ..... | Use natural gas, or equivalent, as the kiln fuel, except during periods of natural gas curtailment or supply interruption, as defined in §63.9824. |
| 4. Each existing clay refractory products kiln. | Minimize fuel-based HAP emissions ..... | Use natural gas, or equivalent, as the kiln fuel, except during periods of natural gas curtailment or supply interruption, as defined in §63.9824. |

TABLE 4 TO SUBPART SSSSS TO PART 63—REQUIREMENTS FOR PERFORMANCE TESTS

As stated in §63.9800, you must comply with the requirements for performance tests for affected sources in the following table:

| For . . . | You must . . . | Using . . . | According to the following requirements . . . |
|---|---|---|---|
| 1. Each affected source listed in Table 1 to this subpart. | a. Conduct performance tests ..... | i. The requirements of the general provisions in subpart A of this part and the requirements to this subpart. | (1) Record the date of the test; and<br>(2) Identify the emission source that is tested; and<br>(3) Collect and record the corresponding operating parameter and emission test data listed in this table for each run of the performance test; and<br>(4) Repeat the performance test at least every 5 years; and<br>(5) Repeat the performance test before changing the parameter value for any operating limit specified in your OM&M plan; and |

| For . . . | You must . . . | Using . . . | According to the following requirements . . . |
|---|---|---|---|
| | | | (6) If complying with the THC concentration or THC percentage reduction limits specified in items 2 through 9 of Table 1 to this subpart, repeat the performance test under the conditions specified in items 2.a.2. and 2.a.3. of this table; and<br>(7) If complying with the emission limits for new clay refractory products kilns specified in items 10 and 11 of Table 1 to this subpart, repeat the performance test under the conditions specified in items 14.a.i.4. and 17.a.i.4. of this table. |
| | b. Select the locations of sampling ports and the number of traverse points. | i. Method 1 or 1A of 40 CFR part 60, appendix A. | (1) To demonstrate compliance with the percentage reduction limits specified in items 2.b., 3.b., 6.b., 7.b., 10, and 11 of Table 1 to this subpart, locate sampling sites at the inlet of the control device and at either the outlet of the control device or at the stack prior to any releases to the atmosphere; and<br>(2) To demonstrate compliance with any other emission limit specified in Table 1 to this subpart, locate all sampling sites at the outlet of the control device or at the stack prior to any releases to the atmosphere. |
| | c. Determine gas velocity and volumetric flow rate. | Method 2, 2A, 2C, 2D, 2F, or 2G of 40 CFR part 60, appendix A. | Measure gas velocities and volumetric flow rates at 1-hour intervals throughout each test run. |
| | d. Conduct gas molecular weight analysis. | (i) Method 3, 3A, or 3B of 40 CFR part 60, appendix A; or<br>(ii) ASME PTC 19.10–1981–Part 10. | As specified in the applicable test method.<br>You may use ASME PTC 19.10–1981–Part 10 (available for purchase from Three Park Avenue, New York, NY 10016–5990) as an alternative to EPA Method 3B. |
| | e. Measure gas moisture content | Method 4 of 40 CFR part 60, appendix A. | As specified in the applicable test method. |

| For . . . | You must . . . | Using . . . | According to the following requirements . . . |
|---|---|---|---|
| 2. Each new or existing curing oven, shape dryer, and kiln that is used to process refractory products that use organic HAP; each new or existing coking oven and defumer that is used to produce pitch-impregnated refractory products; each new shape preheater that is used to produce pitch-impregnated refractory products; AND each new or existing process unit that is exhausted to a thermal or catalytic oxidizer that also controls emissions from an affected shape preheater or pitch working tank. | a. Conduct performance tests ..... | ..... | (1) Conduct the performance test while the source is operating at the maximum organic HAP processing rate, as defined in § 63.9824, reasonably expected to occur; and<br>(2) Repeat the performance test before starting production of any product for which the organic HAP processing rate is likely to exceed the maximum organic HAP processing rate established during the most recent performance test by more than 10 percent, as specified in § 63.9798(c); and<br>(3) Repeat the performance test on any affected uncontrolled kiln following process changes (e.g., shorter curing oven cycle time) that could increase organic HAP emissions from the affected kiln, as specified in § 63.9798(d). |
| | b. Satisfy the applicable requirements listed in items 3 through 13 of this table. | | |
| 3. Each affected continuous process unit. | a. Perform a minimum of 3 test runs. | The appropriate test methods specified in items 1, 4, and 5 of this table. | Each test run must be at least 1 hour in duration. |
| | b. Establish the operating limit for the maximum organic HAP processing rate. | i. Method 311 of 40 CFR part 63, appendix A, OR material safety data sheets (MSDS), OR product labels to determine the mass fraction of organic HAP in each resin, binder, or additive; and | (1) Calculate and record the organic HAP content of all refractory shapes that are processed during the performance test, based on the mass fraction of organic HAP in the resins, binders, or additives; the mass fraction of each resin, binder, or additive, in the product; and the process feed rate; and |
| | | ii. Product formulation data that specify the mass fraction of each resin, binder, and additive in the products that are processed during the performance test; and | (2) Calculate and record the organic HAP processing rate (pounds per hour) for each test run; and |
| | | iii. Process feed rate data (tons per hour). | (3) Calculate and record the maximum organic HAP processing rate as the average of the organic HAP processing rates for the three test runs. |
| | c. Record the operating temperature of the affected source. | Process data ..... | During each test run and at least once per hour, record the operating temperature in the highest temperature zone of the affected source. |

| For . . . | You must . . . | Using . . . | According to the following requirements . . . |
|---|---|---|---|
| 4. Each continuous process unit that is subject to the THC emission limit listed in item 2.a., 3.a., 4, or 5 of Table 1 to this subpart. | a. Measure THC concentrations at the outlet of the control device or in the stack. | i. Method 25A of 40 CFR part 60, appendix A. | (1) Each minute, measure and record the concentrations of THC in the exhaust stream; and<br>(2) Provide at least 50 1-minute measurements for each valid hourly average THC concentration. |
| | b. Measure oxygen concentrations at the outlet of the control device or in the stack. | i. Method 3A of 40 CFR part 60, appendix A. | (1) Each minute, measure and record the concentrations of oxygen in the exhaust stream; and<br>(2) Provide at least 50 1-minute measurements for each valid hourly average THC concentration. |
| | c. Determine the hourly average THC concentration, corrected to 18 percent oxygen. | i. Equation 1 of § 63.9800(g)(1); and.<br>ii. The 1-minute THC and oxygen concentration data. | (1) Calculate the hourly average THC concentration for each hour of the performance test as the average of the 1-minute THC measurements; and<br>(2) Calculate the hourly average oxygen concentration for each hour of the performance test as the average of the 1-minute oxygen measurements; and<br>(3) Correct the hourly average THC concentrations to 18 percent oxygen using Equation 1 of § 63.9800(g)(1). |
| | d. Determine the 3-hour block average THC emission concentration, corrected to 18 percent oxygen. | The hourly average concentration of THC, corrected to 18 percent oxygen, for each test run. | Calculate the 3-hour block average THC emission concentration, corrected to 18 percent oxygen, as the average of the hourly average THC emission concentrations, corrected to 18 percent oxygen. |
| 5. Each continuous process unit that is subject to the THC percentage reduction limit listed in item 2.b. or 3.b. of Table 1 to this subpart. | a. Measure THC concentrations at the inlet and outlet of the control device. | i. Method 25A of 40 CFR part 60, appendix A. | (1) Each minute, measure and record the concentrations of THC at the inlet and outlet of the control device; and<br>(2) Provide at least 50 1-minute measurements for each valid hourly average THC concentration at the control device inlet and outlet. |
| | b. Determine the hourly THC mass emissions rates at the inlet and outlet of the control device. | i. The 1-minute THC concentration data at the control device inlet and outlet; and<br>ii. The volumetric flow rates at the control device inlet and outlet. | Calculate the hourly THC mass emissions rates at the control device inlet and outlet for each hour of the performance test. |
| | c. Determine the 3-hour block average THC percentage reduction. | i. The hourly THC mass emissions rates at the inlet and outlet of the control device. | (1) Calculate the hourly THC percentage reduction for each hour of the performance test using Equation 2 of § 63.9800(g)(1); and<br>(2) Calculate the 3-hour block average THC percentage reduction. |

| For . . . | You must . . . | Using . . . | According to the following requirements . . . |
|---|---|---|---|
| 6. Each continous process unit that is equipped with a thermal oxidizer. | a. Establish the operating limit for the minimum allowable thermal oxidizer combustion chamber temperature. | i. Continuous recording of the output of the combustion chamber temperature measurement device. | (1) At least every 15 minutes, measure and record the thermal oxidizer combustion chamber temperature; and<br>(2) Provide at least one measurement during at least three 15-minute periods per hour of testing; and<br>(3) Calculate the hourly average thermal oxidizer combustion chamber temperature for each hour of the performance test; and<br>(4) Calculate the minimum allowable combustion chamber temperature as the average of the combustion chamber temperatures for the three test runs, minus 14 °C (25 °F). |
| 7. Each continuous process unit that is equipped with a catalytic oxidizer. | a. Establish the operating limit for the minimum allowable temperature at the inlet of the catalyst bed. | i. Continuous recording of the output of the temperature measurement device. | (1) At least every 15 minutes, measure and record the temperature at the inlet of the catalyst bed; and<br>(2) Provide at least one catalyst bed inlet temperature measurement during at least three 15-minute periods per hour of testing; and<br>(3) Calculate the hourly average catalyst bed inlet temperature for each hour of the performance test; and<br>(4) Calculate the minimum allowable catalyst bed inlet temperature as the average of the catalyst bed inlet temperatures for the three test runs, minus 14 °C (25 °F). |
| 8. Each affected batch process unit. | a. Perform a minimum of two test runs. | i. The appropriate test methods specified in items 1, 9, and 10 of this table. | (1) Each test run must be conducted over a separate batch cycle unless you satisfy the requirements of § 63.9800(f)(3) and (4); and<br>(2) Each test run must begin with the start of a batch cycle, except as specified in item 8.a.i.4. of this table; and<br>(3) Each test run must continue until the end of the batch cycle, except as specified in items 8.a.i.4. and 8.a.i.5. of this table; and<br>(4) If you develop an emissions profile, as described in § 63.9802(a), AND for sources equipped with a thermal or catalytic oxidizer, you do not reduce the oxidizer operating temperature, as specified in item 13 of this table, you can limit each test run to the 3-hour peak THC emissions period; and |

| For . . . | You must . . . | Using . . . | According to the following requirements . . . |
|---|---|---|---|
| | | | (5) If you do not develop an emissions profile, a test run can be stopped, and the results of that run considered complete, if you measure emissions continuously until at least 3 hours after the affected process unit has reached maximum temperature, AND the hourly average THC mass emissions rate has not increased during the 3-hour period since maximum process temperature was reached, and the hourly average concentrations of THC at the inlet of the control device have not exceeded 20 ppmvd, corrected to 18 percent oxygen, during the 3-hour period since maximum process temperature was reached or the hourly average THC percentage reduction has been at least 95 percent during the 3-hour period since maximum process temperature was reached, AND, for sources equipped with a thermal or catalytic oxidizer, at least 1 hour has passed since any reduction in the operating temperature of the oxidizer, as specified in item 13 of this table. |
| | b. Establish the operating limit for the maximum organic HAP processing rate. | i. Method 311 of 40 CFR part 63, appendix A, OR MSDS, OR product labels to determine the mass fraction of organic HAP in each resin, binder, or additive; and | (1) Calculate and record the organic HAP content of all refractory shapes that are processed during the performance test, based on the mass fraction of HAP in the resins, binders, or additives; the mass fraction of each resin, binder, or additive, in the product, and the batch weight prior to processing; and |
| | | ii. Product formulation data that specify the mass fraction of each resin, binder, and additive in the products that are processed during the performance test; and | (2) Calculate and record the organic HAP processing rate (pounds per batch) for each test run; and |
| | | iii. Batch weight (tons) ..... | (3) Calculate and record the maximum organic HAP processing rate as the average of the organic HAP processing rates for the two test runs. |
| | c. Record the batch cycle time ..... | Process data ..... | Record the total elapsed time from the start to the completion of the batch cycle. |
| | d. Record the operating temperature of the affected source. | Process data ..... | Record the operating temperature of the affected source at least once every hour from the start to the completion of the batch cycle. |
| 9. Each batch process unit that is subject to the THC emission limit listed in item 6.a., 7.a., 8, or 9 of Table 1 to this subpart. | a. Measure THC concentrations at the outlet of the control device or in the stack. | i. Method 25A of 40 CFR part 60, appendix A. | (1) Each minute, measure and record the concentrations of THC in the exhaust stream; and (2) Provide at least 50 1-minute measurements for each valid hourly average THC concentration. |

| For . . . | You must . . . | Using . . . | According to the following requirements . . . |
|---|---|---|---|
| | b. Measure oxygen concentrations at the outlet of the control device or in the stack. | i. Method 3A of 40 CFR part 60, appendix A. | (1) Each minute, measure and record the concentrations of oxygen in the exhaust stream; and<br>(2) Provide at least 50 1-minute measurements for each valid hourly average oxygen concentration. |
| | c. Determine the hourly average THC concentration, corrected to 18 percent oxygen. | i. Equation 1 of § 63.9800(g)(1); and.<br>ii. The 1-minute THC and oxygen concentration data. | (1) Calculate the hourly average THC concentration for each hour of the performance test as the average of the 1-minute THC measurements; and<br>(2) Calculate the hourly average oxygen concentration for each hour of the performance test as the average of the 1-minute oxygen measurements; and<br>(3) Correct the hourly average THC concentrations to 18 percent oxygen using Equation 1 of § 63.9800(g)(1). |
| | d. Determine the 3-hour peak THC emissions period for each test run. | The hourly average THC concentrations, corrected to 18 percent oxygen. | Select the period of 3 consecutive hours over which the sum of the hourly average THC concentrations, corrected to 18 percent oxygen, is greater than the sum of the hourly average THC emission concentrations, corrected to 18 percent oxygen, for any other period of 3 consecutive hours during the test run. |
| | e. Determine the average THC concentration, corrected to 18 percent oxygen, for each test run. | The hourly average THC emission concentrations, corrected to 18 percent oxygen, for the 3-hour peak THC emissions period. | Calculate the average of the hourly average THC concentrations, corrected to 18 percent oxygen, for the 3 hours of the peak emissions period for each test run. |
| | f. Determine the 2-run block average THC concentration, corrected to 18 percent oxygen, for the emission test. | The average THC concentration, corrected to 18 percent oxygen, for each test run. | Calculate the average of the average THC concentrations, corrected to 18 percent oxygen, for each run. |
| 10. Each batch process unit that is subject to the THC percentage reduction limit listed in item 6.b. or 7.b. of Table 1 to this subpart. | a. Measure THC concentrations at the inlet and outlet of the control device. | i. Method 25A of 40 CFR part 60, appendix A. | (1) Each minute, measure and record the concentrations of THC at the control device inlet and outlet; and<br>(2) Provide at least 50 1-minute measurements for each valid hourly average THC concentration at the control device inlet and outlet. |
| | b. Determine the hourly THC mass emissions rates at the control device inlet and outlet. | i. The 1-minute THC concentration data at the control device inlet and outlet; and<br>ii. The volumetric flow rates at the control device inlet and outlet. | (1) Calculate the hourly mass emissions rates at the control device inlet and outlet for each hour of the performance test. |
| | c. Determine the 3-hour peak THC emissions period for each test run. | The hourly THC mass emissions rates at the control device inlet. | Select the period of 3 consecutive hours over which the sum of the hourly THC mass emissions rates at the control device inlet is greater than the sum of the hourly THC mass emissions rates at the control device inlet for any other period of 3 consecutive hours during the test run. |
| | d. Determine the average THC percentage reduction for each test run. | i. Equation 2 of § 63.9800(g)(2); and.<br>ii. The hourly THC mass emissions rates at the control device inlet and outlet for the 3-hour peak THC emissions period. | Calculate the average THC percentage reduction for each test run using Equation 2 of § 63.9800(g)(2). |

| For . . . | You must . . . | Using . . . | According to the following requirements . . . |
|---|---|---|---|
| | e. Determine the 2-run block average THC percentage reduction for the emission test. | The average THC percentage reduction for each test run. | Calculate the average of the average THC percentage reductions for each test run. |
| 11. Each batch process unit that is equipped with a thermal oxidizer. | a. Establish the operating limit for the minimum thermal oxidizer combustion chamber temperature. | i. Continuous recording of the output of the combustion chamber temperature measurement device. | (1) At least every 15 minutes, measure and record the thermal oxidizer combustion chamber temperature; and<br>(2) Provide at least one temperature measurement during at least three 15-minute periods per hour of testing; and<br>(3) Calculate the hourly average combustion chamber temperature for each hour of the 3-hour peak emissions period, as defined in item 9.d. or 10.c. of this table, whichever applies; and<br>(4) Calculate the minimum allowable thermal oxidizer combustion chamber operating temperature as the average of the hourly combustion chamber temperatures for the 3-hour peak emissions period, minus 14 °C (25 °F). |
| 12. Each batch process unit that is equipped with a catalytic oxidizer. | a. Establish the operating limit for the minimum temperature at the inlet of the catalyst bed. | i. Continuous recording of the output of the temperature measurement device. | (1) At least every 15 minutes, measure and record the temperature at the inlet of the catalyst bed; and<br>(2) Provide at least one catalyst bed inlet temperature measurement during at least three 15-minute periods per hour of testing; and<br>(3) Calculate the hourly average catalyst bed inlet temperature for each hour of the 3-hour peak emissions period, as defined in item 9.d. or 10.c. of this table, whichever applies; and<br>(4) Calculate the minimum allowable catalytic oxidizer catalyst bed inlet temperature as the average of the hourly catalyst bed inlet temperatures for the 3-hour peak emissions period, minus 14 °C (25 °F). |
| 13. Each batch process unit that is equipped with a thermal or catalytic oxidizer. | a. During each test run, maintain the applicable operating temperature of the oxidizer until emission levels allow the oxidizer to be shut off or the operating temperature of the oxidizer to be reduced. | | (1) The oxidizer can be shut off or the oxidizer operating temperature can be reduced if you do not use an emission profile to limit testing to the 3-hour peak emissions period, as specified in item 8.a.i.4. of this table; and<br>(2) At least 3 hours have passed since the affected process unit reached maximum temperature; and<br>(3) The applicable emission limit specified in item 6.a. or 6.b. of Table 1 to this subpart was met during each of the previous three 1-hour periods; and<br>(4) The hourly average THC mass emissions rate did not increase during the 3-hour period since maximum process temperature was reached; and |

| For . . . | You must . . . | Using . . . | According to the following requirements . . . |
|---|---|---|---|
| | | | (5) The applicable emission limit specified in item 6.a. and 6.b. of Table 1 to this subpart was met during each of the four 15-minute periods immediately following the oxidizer temperature reduction; and<br>(6) If the applicable emission limit specified in item 6.a. or 6.b. of Table 1 to this subpart was not met during any of the four 15-minute periods immediately following the oxidizer temperature reduction, you must return the oxidizer to its normal operating temperature as soon as possible and maintain that temperature for at least 1 hour; and<br>(7) Continue the test run until the applicable emission limit specified in items 6.a. and 6.b. of Table 1 to this subpart is met for at least four consecutive 15-minute periods that immediately follow the temperature reduction; and<br>(8) Calculate the hourly average oxidizer operating temperature for each hour of the performance test since the affected process unit reached maximum temperature. |
| 14. Each new continuous kiln that is used to process clay refractory products. | a. Measure emissions of HF and HCl. | i. Method 26A of 40 CFR part 60, appendix A; or<br>ii. Method 26 of 40 CFR part 60, appendix A; or<br>iii. Method 320 of 40 CFR part 63, appendix A. | (1) Conduct the test while the kiln is operating at the maximum production level; and<br>(2) You may use Method 26 of 40 CFR part 60, appendix A, only if no acid PM (e.g., HF or HCl dissolved in water droplets emitted by sources controlled by a wet scrubber) is present; and<br>(3) If you use Method 320 of 40 CFR part 63, appendix A, you must follow the analyte spiking procedures of Section 13 of Method 320 unless you can demonstrate that the complete spiking procedure has been conducted at a similar source; and<br>(4) Repeat the performance test if the affected source is controlled with a DLA and you change the source of the limestone used in the DLA. |
| | b. Perform a minimum of 3 test runs. | The appropriate test methods specified in items 1 and 14.a. of this table. | Each test run must be at least 1 hour in duration. |
| 15. Each new continuous kiln that is subject to the production-based HF and HCl emission limits specified in items 10.a. and 10.b. of Table 1 to this subpart. | a. Record the uncalcined clay processing rate. | i. Production data; and .....<br>ii. Product formulation data that specify the mass fraction of uncalcined clay in the products that are processed during the performance test. | (1) Record the production rate (tons per hour of fired product); and<br>(2) Calculate and record the average rate at which uncalcined clay is processed (tons per hour) for each test run; and<br>(3) Calculate and record the 3-run average uncalcined clay processing rate as the average of the average uncalcined clay processing rates for each test run. |

| For . . . | You must . . . | Using . . . | According to the following requirements . . . |
|---|---|---|---|
| | b. Determine the HF mass emissions rate at the outlet of the control device or in the stack. | i. Method 26A of 40 CFR part 60, appendix A; or<br>ii. Method 26 of 40 CFR part 60, appendix A; or<br>iii. Method 320 of 40 CFR part 63, appendix A. | Calculate the HF mass emissions rate for each test. |
| | c. Determine the 3-hour block average production-based HF emissions rate. | i. The HF mass emissions rate for each test run; and<br>ii. The average uncalcined clay processing rate. | (1) Calculate the hourly production-based HF emissions rate for each test run using Equation 3 of § 63.9800(g)(3); and<br>(2) Calculate the 3-hour block average production-based HF emissions rate as the average of the hourly production-based HF emissions rates for each test run. |
| | d. Determine the HCl mass emissions rate at the outlet of the control device or in the stack. | i. Method 26A of 40 CFR part 60, appendix A; or<br>ii. Method 26 of 40 CFR part 60, appendix A; or<br>iii. Method 320 of 40 CFR part 63, appendix A. | Calculate the HCl mass emissions rate for each test run. |
| | e. Determine the 3-hour block average production-based HCl emissions rate. | i. The HCl mass emissions rate for each test run; and<br>ii. The average uncalcined clay processing rate. | (1) Calculate the hourly production-based HCl emissions rate for each test run using Equation 3 of § 63.9800(g)(3); and<br>(2) Calculate the 3-hour block average production-based HCl emissions rate as the average of the production-based HCl emissions rates for each test run. |
| 16. Each new continuous kiln that is subject to the HF and HCl percentage reduction limits specified in items 10.a. and 10.b. of Table 1 to this subpart. | a. Measure the HF mass emissions rates at the inlet and outlet of the control device. | i. Method 26A of 40 CFR part 60, appendix A; or<br>ii. Method 26 of 40 CFR part 60, appendix A; or<br>iii. Method 320 of 40 CFR part 63, appendix A. | Calculate the HF mass emissions rates at the control device inlet and outlet for each test run. |
| | b. Determine the 3-hour block average HF percentage reduction. | i. The HF mass emissions rates at the inlet and outlet of the control device for each test run | (1) Calculate the hourly HF percentage reduction using Equation 2 of § 63.9800(g)(2); and<br>(2) Calculate the 3-hour block average HF percentage reduction as the average of the HF percentage reductions for each test run. |
| | c. Measure the HCl mass emissions rates at the inlet and outlet of the control device. | i. Method 26A of 40 CFR part 60, appendix A; or<br>ii. Method 26 of 40 CFR part 60, appendix A; or<br>iii. Method 320 of 40 CFR part 63, appendix A. | Calculate the HCl mass emissions rates at the control device inlet and outlet for each test run. |
| | d. Determine the 3-hour block average HCl percentage reduction. | i. The HCl mass emissions rates at the inlet and outlet of the control device for each test run. | (1) Calculate the hourly HCl percentage reduction using Equation 2 of § 63.9800(g)(2); and<br>(2) Calculate the 3-hour block average HCl percentage reduction as the average of HCl percentage reductions for each test run. |

| For . . . | You must . . . | Using . . . | According to the following requirements . . . |
|---|---|---|---|
| 17. Each new batch process kiln that is used to process clay refractory products. | a. Measure emissions of HF and HCl at the inlet and outlet of the control device. | i. Method 26A of 40 CFR part 60, appendix A; or<br>ii. Method 26 of 40 CFR part 60, appendix A; or<br>iii. Method 320 of 40 CFR part 63, appendix A. | (1) Conduct the test while the kiln is operating at the maximum production level; and<br>(2) You may use Method 26 of 40 CFR part 60, appendix A, only if no acid PM (e.g., HF or HCl dissolved in water droplets emitted by sources controlled by a wet scrubber) is present; and<br>(3) If you use Method 320 of 40 CFR part 63, you must follow the analyte spiking procedures of Section 13 of Method 320 unless you can demonstrate that the complete spiking procedure has been conducted at a similar source; and<br>(4) Repeat the performance test if the affected source is controlled with a DLA and you change the source of the limestone used in the DLA. |
| | b. Perform a minimum of 2 test runs. | i. The appropriate test methods specified in items 1 and 17.a. of this table. | (1) Each test run must be conducted over a separate batch cycle unless you satisfy the requirements of § 63.9800(f)(3) and (4); and<br>(2) Each test run must consist of a series of 1-hour runs at the inlet and outlet of the control device, beginning with the start of a batch cycle, except as specified in item 17.b.i.4. of this table; and<br>(3) Each test run must continue until the end of the batch cycle, except as specified in item 17.b.i.4. of this table; and<br>(4) If you develop an emissions profile, as described in § 63.9802(b), you can limit each test run to the 3-hour peak HF emissions period. |
| | c. Determine the hourly HF and HCl mass emissions rates at the inlet and outlet of the control device. | i. The appropriate test methods specified in items 1 and 17.a. of this table. | Determine the hourly mass HF and HCl emissions rates at the inlet and outlet of the control device for each hour of each test run. |
| | d. Determine the 3-hour peak HF emissions period. | The hourly HF mass emissions rates at the inlet of the control device. | Select the period of 3 consecutive hours over which the sum of the hourly HF mass emissions rates at the control device inlet is greater than the sum of the hourly HF mass emissions rates at the control device inlet for any other period of 3 consecutive hours during the test run. |
| | e. Determine the 2-run block average HF percentage reduction for the emissions test. | i. The hourly average HF emissions rates at the inlet and outlet of the control device. | (1) Calculate the HF percentage reduction for each hour of the 3-hour peak HF emissions period using Equation 2 of § 63.9800(g)(2); and<br>(2) Calculate the average HF percentage reduction for each test run as the average of the hourly HF percentage reductions for the 3-hour peak HF emissions period for that run; and |

| For . . . | You must . . . | Using . . . | According to the following requirements . . . |
|---|---|---|---|
| | | | (3) Calculate the 2-run block average HF percentage reduction for the emission test as the average of the average HF percentage reductions for the two test runs. |
| | f. Determine the 2-run block average HCl percentage reduction for the emission test. | i. The hourly average HCl emissions rates at the inlet and outlet of the control device. | (1) Calculate the HCl percentage reduction for each hour of the 3-hour peak HF emissions period using Equation 2 § 63.9800(g)(2); and<br>(2) Calculate the average HCl percentage reduction for each test run as the average of the hourly HCl percentage reductions for the 3-hour peak HF emissions period for that run; and<br>(3) Calculate the 2-run block average HCl percentage reduction for the emission test as the average of the average HCl percentage reductions for the two test runs. |
| 18. Each new kiln that is used to process clay refractory products and is equipped with a DLA. | a. Establish the operating limit for the minimum pressure drop across the DLA. | Data from the pressure drop measurement device during the performance test. | (1) At least every 15 minutes, measure the pressure drop across the DLA; and<br>(2) Provide at least one pressure drop measurement during at least three 15-minute periods per hour of testing; and<br>(3) Calculate the hourly average pressure drop across the DLA for each hour of the performance test; and<br>(4) Calculate and record the minimum pressure drop as the average of the hourly average pressure drops across the DLA for the two or three test runs, whichever applies. |
| | b. Establish the operating limit for the limestone feeder setting. | Data from the limestone feeder during the performance test. | (1) Ensure that limestone in the feed hopper, silo, and DLA is free-flowing at all times during the performance test; and<br>(2) Establish the limestone feeder setting 1 week prior to the performance test; and<br>(3) Record and maintain the feeder setting for the 1-week period that precedes the performance test and during the performance test. |
| 19. Each new kiln that is used to process clay refractory products and is equipped with a DIFF or DLS/FF. | a. Document conformance with specifications and requirements of the bag leak detection system. | Data from the installation and calibration of the bag leak detection system. | Submit analyses and supporting documentation demonstrating conformance with EPA guidance and specifications for bag leak detection systems as part of the Notification of Compliance Status. |
| | b. Establish the operating limit for the lime feeder setting. | i. Data from the lime feeder during the performance test. | (1) For continuous lime injection systems, ensure that lime in the feed hopper or silo is free-flowing at all times during the performance test; and<br>(2) Record the feeder setting for the three test runs; and<br>(3) If the feed rate setting varies during the three test runs, calculate and record the average feed rate for the two or three test runs, whichever applies. |

| For . . . | You must . . . | Using . . . | According to the following requirements . . . |
|---|---|---|---|
| 20. Each new kiln that is used to process clay refractory products and is equipped with a wet scrubber. | a. Establish the operating limit for the minimum scrubber pressure drop. | i. Data from the pressure drop measurement device during the performance test. | (1) At least every 15 minutes, measure the pressure drop across the scrubber; and<br>(2) Provide at least one pressure drop measurement during at least three 15-minute periods per hour of testing; and<br>(3) Calculate the hourly average pressure drop across the scrubber for each hour of the performance test; and<br>(4) Calculate and record the minimum pressure drop as the average of the hourly average pressure drops across the scrubber for the two or three test runs, whichever applies. |
| | b. Establish the operating limit for the minimum scrubber liquid pH. | i. Data from the pH measurement device during the performance test. | (1) At least every 15 minutes, measure scrubber liquid pH; and<br>(2) Provide at least one pH measurement during at least three 15-minute periods per hour of testing; and<br>(3) Calculate the hourly average pH values for each hour of the performance test; and<br>(4) Calculate and record the minimum liquid pH as the average of the hourly average pH measurements for the two or three test runs, whichever applies. |
| | c. Establish the operating limit for the minimum scrubber liquid flow rate. | i. Data from the flow rate measurement device during the performance test. | (1) At least every 15 minutes, measure the scrubber liquid flow rate; and<br>(2) Provide at least one flow rate measurement during at least three 15-minute periods per hour of testing; and<br>(3) Calculate the hourly average liquid flow rate for each hour of the performance test; and<br>(4) Calculate and record the minimum liquid flow rate as the average of the hourly average liquid flow rates for the two or three test runs, whichever applies. |
| | d. If chemicals are added to the scrubber liquid, establish the operating limit for the minimum scrubber chemical feed rate. | i. Data from the chemical feed rate measurement device during the performance test. | (1) At least every 15 minutes, measure the scrubber chemical feed rate; and<br>(2) Provide at least one chemical feed rate measurement during at least three 15-minute periods per hour of testing; and<br>(3) Calculate the hourly average chemical feed rate for each hour of the performance test; and<br>(4) Calculate and record the minimum chemical feed rate as the average of the hourly average chemical feed rates for the two or three test runs, whichever applies. |

TABLE 5 TO SUBPART SSSSS OF PART 63—INITIAL COMPLIANCE WITH EMISSION LIMITS

As stated in § 63.9806, you must show initial compliance with the emission limits for affected sources according to the following table:

| For . . . | For the following emission limit . . . | You have demonstrated compliance if . . . |
|---|---|---|
| 1. Each affected source listed in Table 1 to this subpart. | a. Each applicable emission limit listed in Table 1 to this subpart. | i. Emissions measured using the test methods specified in Table 4 to this subpart satisfy the applicable emission limits specified in Table 1 to this subpart; and<br>ii. You establish and have a record of the operating limits listed in Table 2 to this subpart over the performance test period; and<br>iii. You report the results of the performance test in the Notification of Compliance Status, as specified by §63.9812(e)(1) and (2). |
| 2. Each new or existing curing oven, shape dryer, and kiln that is used to process refractory products that use organic HAP; each new or existing coking oven and defumer that is used to produce pitch-impregnated refractory products; each new shape preheater that is used to produce pitch-impregnated refractory products; AND each new or existing process unit that is exhausted to a thermal or catalytic oxidizer that also controls emissions from an affected shape preheater or pitch working tank. | As specified in items 3 through 8 of this table. | You have satisfied the applicable requirements specified in items 3 through 8 of this table. |
| 3. Each affected continuous process unit that is subject to the THC emission concentration limit listed in item 2.a., 3.a., 4, or 5 of Table 1 to this subpart. | The average THC concentration must not exceed 20 ppmvd, corrected to 18 percent oxygen. | The 3-hour block average THC emission concentration measured during the performance test using Methods 25A and 3A is equal to or less than 20 ppmvd, corrected to 18 percent oxygen. |
| 4. Each affected continuous process unit that is subject to the THC percentage reduction limit listed in item 2.b. or 3.b. of Table 1 to this subpart. | The average THC percentage reduction must equal or exceed 95 percent. | The 3-hour block average THC percentage reduction measured during the performance test using Method 25A is equal to or greater than 95 percent. |
| 5. Each affected batch process unit that is subject to the THC emission concentration limit listed in item 6.a., 7.a., 8, or 9 of Table 1 to this subpart. | The average THC concentration must not exceed 20 ppmvd, corrected to 18 percent oxygen. | The 2-run block average THC emission concentration for the 3-hour peak emissions period measured during the performance test using Methods 25A and 3A is equal to or less than 20 ppmvd, corrected to 18 percent oxygen. |
| 6. Each affected batch process unit that is subject to the THC percentage reduction limit listed in item 6.b. or 7.b. of Table 1 to this subpart. | The average THC percentage reduction must equal or exceed 95 percent. | The 2-run block average THC percentage reduction for the 3-hour peak emissions period measured during the performance test using Method 25A is equal to or exceeds 95 percent. |
| 7. Each affected continuous or batch process unit that is equipped with a control device other than a thermal or catalytic oxidizer and is subject to the emission limit listed in item 3 or 7 of Table 1 to this subpart. | a. The average THC concentration must not exceed 20 ppmvd, corrected to 18 percent oxygen; or | i. You have installed a THC CEMS at the outlet of the control device or in the stack of the affected source; and |
| | b. The average THC percentage reduction must equal or exceed 95 percent. | ii. You have satisfied the requirements of PS–8 of 40 CFR part 60, appendix B. |
| 8. Each affected continuous or batch process unit that uses process changes to reduce organic HAP emissions and is subject to the emission limit listed in item 4 or 8 of Table 1 to this subpart. | The average THC concentration must not exceed 20 ppmvd, corrected to 18 percent oxygen. | i. You have installed a THC CEMS at the outlet of the control device or in the stack of the affected source; and<br>ii. You have satisfied the requirements of PS–8 of 40 CFR part 60, appendix B. |
| 9. Each new continuous kiln that is used to process clay refractory products. | a. The average HF emissions must not exceed 0.019 kg/Mg (0.038 lb/ton) of uncalcined clay processed; OR the average uncontrolled HF emissions must be reduced by at least 90 percent. | i. The 3-hour block average production-based HF emissions rate measured during the performance test using one of the methods specified in item 14.a.i. of Table 4 to this subpart is equal to or less than 0.019 kg/Mg (0.038 lb/ton) of uncalcined clay processed; or<br>ii. The 3-hour block average HF emissions reduction measured during the performance test is equal to or greater than 90 percent. |

| For . . . | For the following emission limit . . . | You have demonstrated compliance if . . . |
|---|---|---|
| | b. The average HCl emissions must not exceed 0.091 kg/Mg (0.18 lb/ton) of uncalcined clay processed; OR the average uncontrolled HCl emissions must be reduced by at least 30 percent. | i. The 3-hour block average production-based HCl emissions rate measured during the performance test using one of the methods specified in item 14.a.i. of Table 4 to this subpart is equal to or less than 0.091 kg/Mg (0.18 lb/ton) of uncalcined clay processed; or<br>ii. The 3-hour block average HCl emissions reduction measured during the performance test is equal to or greater than 30 percent. |
| 10. Each new batch process kiln that is used to process clay refractory products. | a. The average uncontrolled HF emissions must be reduced by at least 90 percent. | The 2-run block average HF emission reduction measured during the performance test is equal to or greater than 90 percent. |
| | b. The average uncontrolled HCl emissions must be reduced by at least 30 percent. | The 2-run block average HCl emissions reduction measured during the performance test is equal to or greater than 30 percent. |

## TABLE 6 TO SUBPART SSSSS OF PART 63—INITIAL COMPLIANCE WITH WORK PRACTICE STANDARDS

As stated in §63.9806, you must show initial compliance with the work practice standards for affected sources according to the following table:

| For each . . . | For the following standard . . . | You have demonstrated initial compliance if . . . |
|---|---|---|
| 1. Each affected source listed in Table 3 to this subpart. | a. Each applicable work practice standard listed in Table 3 to this subpart. | i. You have selected a method for performing each of the applicable work practice standards listed in Table 3 to this subpart; and<br>ii. You have included in your Initial Notification a description of the method selected for complying with each applicable work practice standard, as required by §63.9(b); and<br>iii. You submit a signed statement with the Notification of Compliance Status that you have implemented the applicable work practice standard listed in Table 3 to this subpart; and<br>iv. You have described in your OM&M plan the method for complying with each applicable work practice standard specified in Table 3 to this subpart. |
| 2. Each basket or container that is used for holding fired refractory shapes in an existing shape preheater and autoclave during the pitch impregnation process. | a. Control POM emissions from any affected shape preheater. | i. You have implemented at least one of the work practice standards listed in item 1 of Table 3 to this subpart; and<br>ii. You have established a system for recording the date and cleaning method for each time you clean an affected basket or container. |
| 3. Each affected new or existing pitch working tank. | Control POM emissions ..... | You have captured and vented emissions from the affected pitch working tank to the device that is used to control emissions from an affected defumer or coking oven, or to a thermal or catalytic oxidizer that is comparable to the control device used on an affected defumer or coking oven. |
| 4. Each new or existing chromium refractory products kiln. | Minimize fuel-based HAP emissions ..... | You use natural gas, or equivalent, as the kiln fuel. |
| 5. Each existing clay refractory products kiln. | Minimize fuel-based HAP emissions ..... | You use natural gas, or equivalent, as the kiln fuel. |

TABLE 7 TO SUBPART SSSSS OF PART 63—CONTINUOUS COMPLIANCE WITH EMISSION LIMITS

As stated in §63.9810, you must show continuous compliance with the emission limits for affected sources according to the following table:

| For . . . | For the following emission limit . . . | You must demonstrate continuous compliance by . . . |
|---|---|---|
| 1. Each affected source listed in Table 1 to this subpart. | a. Each applicable emission limit listed in Table 1 to this subpart. | i. Collecting and recording the monitoring and process data listed in Table 2 (operating limits) to this subpart; and<br>ii. Reducing the monitoring and process data associated with the operating limits specified in Table 2 to this subpart; and<br>iii. Recording the results of any control device inspections; and<br>iv. Reporting, in accordance with §63.9814(e), any deviation from the applicable operating limits specified in Table 2 to this subpart. |
| 2. Each new or existing curing oven, shape dryer, and kiln that is used to process refractory products that use organic HAP; each new or existing coking oven and defumer that is used to produce pitch-impregnated refractory products; each new shape preheater that is used to produce pitch-impregnated refractory products; AND each new or existing process unit that is exhausted to a thermal or catalytic oxidizer that also controls emissions from an affected shape preheater or pitch working tank. | As specified in items 3 though 7 of this table. | Satisfying the applicable requirements specified in items 3 through 7 of this table. |
| 3. Each affected process unit that is equipped with a thermal or catalytic oxidizer. | a. The average THC concentration must not exceed 20 ppmvd, corrected to 18 percent oxygen; OR the average THC percentage reduction must equal or exceed 95 percent. | i. Collecting the applicable data measured by the control device temperature monitoring system, as specified in items 5, 6, 8, and 9 of Table 8 to this subpart; and<br>ii. Reducing the applicable data measured by the control device temperature monitoring system, as specified in items 5, 6, 8, and 9 of Table 8 to this subpart; and<br>iii. Maintaining the average control device operating temperature for the applicable averaging period specified in items 5, 6, 8, and 9 of Table 2 to this subpart at or above the minimum allowable operating temperature established during the most recent performance test. |
| 4. Each affected process unit that is equipped with a control device other than a thermal or catalytic oxidizer. | The average THC concentration must not exceed 20 ppmvd, corrected to 18 percent oxygen; OR the average THC performance reduction must equal or exceed 95 percent. | Operating and maintaining a THC CEMS at the outlet of the control device or in the stack of the affected source, according to the requirements of Procedure 1 of 40 CFR part 60, appendix F. |
| 5. Each affected process unit that uses process changes to meet the applicable emission limit. | The average THC concentration must not exceed 20 ppmvd, corrected to 18 percent oxygen. | Operating and maintaining a THC CEMS at the outlet of the control device or in the stack of the affected source, according to the requirements of Procedure 1 of 40 CFR part 60, appendix F. |
| 6. Each affected continuous process unit | The average THC concentration must not exceed 20 ppmvd, corrected to 18 percent oxygen; OR the average THC percentage reduction must equal or exceed 95 percent. | Recording the organic HAP processing rate (pounds per hour) and the operating temperature of the affected source, as specified in items 3.b. and 3.c. of Table 4 to this subpart. |

| For . . . | For the following emission limit . . . | You must demonstrate continuous compliance by . . . |
|---|---|---|
| 7. Each affected batch process unit ..... | The average THC concentration must not exceed 20 ppmvd, corrected to 18 percent oxygen; OR the average THC percentage reduction must equal or exceed 95 percent. | Recording the organic HAP processing rate (pounds per batch); and process cycle time for each batch cycle; and hourly average operating temperature of the affected source, as specified in items 8.b. through 8.d. of Table 4 to this subpart. |
| 8. Each kiln that is used to process clay refractory products. | As specified in items 9 through 11 of this table. | Satisfying the applicable requirements specified in items 9 through 11 of this table. |
| 9. Each affected kiln that is equipped with a DLA. | a. The average HF emissions must not exceed 0.019 kg/Mg (0.038 lb/ton) of uncalcined clay processed, OR the average uncontrolled HF emissions must be reduced by at least 90 percent; and<br>b. The average HCl emissions must not exceed 0.091 kg/Mg (0.18 lb/ton) of uncalcined clay processed, or the average uncontrolled HCl emissions must be reduced by at least 30 percent. | i. Maintaining the pressure drop across the DLA at or above the minimum levels established during the most recent performance test; and<br>ii. Verifying that the limestone hopper contains an adequate amount of free-flowing limestone by performing a daily visual check of the limestone in the feed hopper; and<br>iii. Recording the limestone feeder setting daily to verify that the feeder setting is at or above the level established during the most recent performance test; and<br>iv. Using the same grade of limestone as was used during the most recent performance test and maintaining records of the source and grade of limestone. |
| 10. Each affected kiln that is equipped with a DIFF or DLS/FF. | a. The average HF emissions must not exceed 0.019 kg/Mg (0.038 lb/ton) of uncalcined clay processed; OR the average uncontrolled HF emissions must be reduced by at least 90 percent; and<br>b. The average HCl emissions must not exceed 0.091 kg/Mg (0.18 lb/ton) of uncalcined clay processed; OR the average uncontrolled HCl emissions must be reduced by at least 30 percent. | i. Verifying at least once each 8-hour shift that lime is free-flowing by means of a visual check, checking the output of a load cell, carrier gas/lime flow indicator, or carrier gas pressure drop measurement system; and<br>ii. Recording feeder setting daily to verify that the feeder setting is at or above the level established during the most recent performance test; and<br>iii. Initiating corrective action within 1 hour of a bag leak detection system alarm AND completing corrective actions in accordance with the OM&M plan, AND operating and maintaining the fabric filter such that the alarm does not engage for more than 5 percent of the total operating time in a 6-month block reporting period. |
| 11. Each affected kiln that is equipped with a wet scrubber. | a. The average HF emissions must not exceed 0.019 kg/Mg (0.038 lb/ton) of uncalcined clay processed; OR the average uncontrolled HF emissions must be reduced by at least 90 percent; and<br>b. The average HCl emissions must not exceed 0.091 kg/Mg (0.18 lb/ton) of uncalcined clay processed; OR the average uncontrolled HCl emissions must be reduced by at least 30 percent. | i. Maintaining the pressure drop across the scrubber, liquid pH, and liquid flow rate at or above the minimum levels established during the most recent performance test; and<br>ii. If chemicals are added to the scrubber liquid, maintaining the average chemical feed rate at or above the minimum chemical feed rate established during the most recent performance test. |

## TABLE 8 TO SUBPART SSSSS OF PART 63—CONTINUOUS COMPLIANCE WITH OPERATING LIMITS

As stated in §63.9810, you must show continuous compliance with the operating limits for affected sources according to the following table:

| For . . . | For the following operating limit . . . | You must demonstrate continuous compliance by . . . |
|---|---|---|
| 1. Each affected source listed in Table 2 to this subpart. | a. Each applicable operating limit listed in Table 2 to this subpart. | i. Maintaining all applicable process and control device operating parameters within the limits established during the most recent performance test; and<br>ii. Conducting annually an inspection of all duct work, vents, and capture devices to verify that no leaks exist and that the capture device is operating such that all emissions are properly vented to the control device in accordance with the OM&M plan. |
| 2. Each affected continuous kiln that is equipped with a control device. | a. The operating limits specified in items 2.a. through 2.c. of Table 2 to this subpart. | i. Operating the control device on the affected kiln during all times except during periods of approved scheduled maintenance, as specified in § 63.9792(e); and<br>ii. Minimizing HAP emissions from the affected kiln during all periods of scheduled maintenance of the kiln control device when the kiln is operating and the control device is out of service; and<br>iii. Minimizing the duration of all periods of scheduled maintenance of the kiln control device when the kiln is operating and the control device is out of service. |
| 3. Each new or existing curing oven, shape dryer, and kiln that is used to process refractory products that use organic HAP; each new or existing coking oven and defumer that is used to produce pitch-impregnated refractory products; each new shape preheater that is used to produce pitch-impregnated refractory products; AND each new or existing process unit that is exhausted to a thermal or catalytic oxidizer that also controls emissions from an affected shape preheater or pitch working tank. | As specified in items 4 through 9 of this table. | Satisfying the applicable requirements specified in items 4 through 9 of this table. |
| 4. Each affected continuous process unit | Maintain process operating parameters within the limits established during the most recent performance test. | i. Recording the organic HAP processing rate (pounds per hour); and<br>ii. Recording the operating temperature of the affected source at least hourly; and<br>iii. Maintaining the 3-hour block average organic HAP processing rate at or below the maximum organic HAP processing rate established during the most recent performance test. |
| 5. Continuous process units that are equipped with a thermal oxidizer. | Maintain the 3-hour block average operating temperature in the thermal oxidizer combustion chamber at or above the minimum allowable operating temperature established during the most recent performance test. | i. Measuring and recording the thermal oxidizer combustion chamber temperature at least every 15 minutes; and<br>ii. Calculating the hourly average thermal oxidizer combustion chamber temperature; and<br>iii. Maintaining the 3-hour block average thermal oxidizer combustion chamber temperature at or above the minimum allowable operating temperature established during the most recent performance test; and<br>iv. Reporting, in accordance with § 63.9814(e), any 3-hour block average operating temperature measurements below the minimum allowable thermal oxidizer combustion chamber operating temperature established during the most recent performance test. |

| For . . . | For the following operating limit . . . | You must demonstrate continuous compliance by . . . |
|---|---|---|
| 6. Continuous process units that are equipped with a catalytic oxidizer. | a. Maintain the 3-hour block average temperature at the inlet of the catalyst bed at or above the minimum allowable catalyst bed inlet temperature established during the most recent performance test. | i. Measuring and recording the temperature at the inlet of the catalyst bed at least every 15 minutes; and<br>ii. Calculating the hourly average temperature at the inlet of the catalyst bed; and<br>iii. Maintaining the 3-hour block average temperature at the inlet of the catalyst bed at or above the minimum allowable catalyst bed inlet temperature established during the most recent performance test; and<br>iv. Reporting, in accordance with § 63.9814(e), any 3-hour block average catalyst bed inlet temperature measurements below the minimum allowable catalyst bed inlet temperature established during the most recent performance; and<br>v. Checking the activity level of the catalyst at least every 12 months and taking any necessary corrective action, such as replacing the catalyst, to ensure that the catalyst is performing as designed. |
| 7. Each affected batch process unit ..... | Maintain process operating parameters within the limits established during the most recent performance test. | i. Recording the organic HAP processing rate (pounds per batch); and<br>ii. Recording the hourly average operating temperature of the affected source; and<br>iii. Recording the process cycle time for each batch cycle; and<br>iv. Maintaining the organic HAP processing rate at or below the maximum organic HAP processing rate established during the most recent performance test. |
| 8. Batch process units that are equipped with a thermal oxidizer. | Maintain the hourly average temperature in the thermal oxidizer combustion chamber at or above the hourly average temperature established for the corresponding 1-hour period of the cycle during the most recent performance test. | i. Measuring and recording the thermal oxidizer combustion chamber temperature at least every 15 minutes; and<br>ii. Calculating the hourly average thermal oxidizer combustion chamber temperature; and<br>iii. From the start of each batch cycle until 3 hours have passed since the process unit reached maximum temperature, maintaining the hourly average operating temperature in the thermal oxidizer combustion chamber at or above the minimum allowable operating temperature established for the corresponding period during the most recent performance test, as determined according to item 11 of Table 4 to this subpart; and<br>iv. For each subsequent hour of the batch cycle, maintaining the hourly average operating temperature in the thermal oxidizer combustion chamber at or above the minimum allowable operating temperature established for the corresponding hour during the most recent performance test, as specified in item 13 of Table 4 to this subpart; and<br>v. Reporting, in accordance with § 63.9814(e), any temperature measurements below the minimum allowable thermal oxidizer combustion chamber temperature measured during the most recent performance test. |

| For . . . | For the following operating limit . . . | You must demonstrate continuous compliance by . . . |
|---|---|---|
| 9. Batch process units that are equipped with a catalytic oxidizer. | Maintain the hourly average temperature at the inlet of the catalyst bed at or above the corresponding hourly average temperature established for the corresponding 1-hour period of the cycle during the most recent performance test. | i. Measuring and recording temperatures at the inlet of the catalyst bed at least every 15 minutes; and<br>ii. Calculating the hourly average temperature at the inlet of the catalyst bed; and<br>iii. From the start of each batch cycle until 3 hours have passed since the process unit reached maximum temperature, maintaining the hourly average operating temperature at the inlet of the catalyst bed at or above the minimum allowable bed inlet temperature established for the corresponding period during the most recent performance test, as determined according to item 12 of Table 4 to this subpart; and<br>iv. For each subsequent hour of the batch cycle, maintaining the hourly average operating temperature at the inlet of the catalyst bed at or above the minimum allowable bed inlet temperature established for the corresponding hour during the most recent performance test, as specified in item 13 of Table 4 to this subpart; and<br>v. Reporting, in accordance with § 63.9814(e), any catalyst bed inlet temperature measurements below the minimum allowable bed inlet temperature measured during the most recent performance test; and<br>vi. Checking the activity level of the catalyst at least every 12 months and taking any necessary corrective action, such as replacing the catalyst, to ensure that the catalyst is performing as designed. |
| 10. Each new kiln that is used to process clay refractory products. | As specified in items 11 through 13 of this table. | Satisfying the applicable requirements specified in items 11 through 13 of this table. |
| 11. Each new kiln that is equipped a DLA | a. Maintain the average pressure drop across the DLA for each 3-hour block period at or above the minimum pressure drop established during the most recent performance test. | i. Collecting the DLA pressure drop data, as specified in item 18.a. of Table 4 to this subpart; and<br>ii. Reducing the DLA pressure drop data to 1-hour and 3-hour block averages; and<br>iii. Maintaining the 3-hour block average pressure drop across the DLA at or above the minimum pressure drop established during the most recent performance test. |
| | b. Maintain free-flowing limestone in the feed hopper, silo, and DLA. | Verifying that the limestone hopper has an adequate amount of free-flowing limestone by performing a daily visual check of the limestone hopper. |
| | c. Maintain the limestone feeder setting at or above the level established during the most recent performance test. | Recording the limestone feeder setting at least daily to verify that the feeder setting is being maintained at or above the level established during the most recent performance test. |
| | d. Use the same grade of limestone from the same source as was used during the most recent performance test. | Using the same grade of limestone as was used during the most recent performance test and maintaining records of the source and grade of limestone. |

| For . . . | For the following operating limit . . . | You must demonstrate continuous compliance by . . . |
|---|---|---|
| 12. Each new kiln that is equipped with a DIFF or DLS/FF. | a. Initiate corrective action within 1 hour of a bag leak detection system alarm and complete corrective actions in accordance with the OM&M plan; AND operate and maintain the fabric filter such that the alarm does not engage for more than 5 percent of the total operating time in a 6-month block reporting period. | i. Initiating corrective action within 1 hour of a bag leak detection system alarm and completing corrective actions in accordance with the OM&M plan; and<br>ii. Operating and maintaining the fabric filter such that the alarm does not engage for more than 5 percent of the total operating time in a 6-month block reporting period; in calculating this operating time fraction, if inspection of the fabric filter demonstrates that no corrective action is required, no alarm time is counted; if corrective action is required, each alarm shall be counted as a minimum of 1 hour; if you take longer than 1 hour to initiate corrective action, the alarm time shall be counted as the actual amount of time taken by you to initiate corrective action. |
| | b. Maintain free-flowing lime in the feed hopper or silo at all times for continuous injection systems; AND maintain feeder setting at or above the level established during the most recent performance test for continuous injection systems. | i. Verifying at least once each 8-hour shift that lime is free-flowing via a load cell, carrier gas/lime flow indicator, carrier gas pressure drop measurement system, or other system; recording all monitor or sensor output, and if lime is found not to be free flowing, promptly initiating and completing corrective actions; and<br>ii. Recording the feeder setting once each day of operation to verify that the feeder setting is being maintained at or above the level established during the most recent performance test. |
| 13. Each new kiln that is used to process clay refractory products and is equipped with a wet scrubber. | a. Maintain the average pressure drop across the scrubber for each 3-hour block period at or above the minimum pressure drop established during the most recent performance test. | i. Collecting the scrubber pressure drop data, as specified in item 20.a. of Table 4 to this subpart; and<br>ii. Reducing the scrubber pressure drop data to 1-hour and 3-hour block averages; and<br>iii. Maintaining the 3-hour block average scrubber pressure drop at or above the minimum pressure drop established during the most recent performance test. |
| | b. Maintain the average scrubber liquid pH for each 3-hour block period at or above the minimum scrubber liquid pH established during the most recent performance test. | i. Collecting the scrubber liquid pH data, as specified in item 20.b. of Table 4 to this subpart; and<br>ii. Reducing the scrubber liquid pH data to 1-hour and 3-hour block averages; and<br>iii. Maintaining the 3-hour block average scrubber liquid pH at or above the minimum scrubber liquid pH established during the most recent performance test. |
| | c. Maintain the average scrubber liquid flow rate for each 3-hour block period at or above the minimum scrubber liquid flow rate established during the most recent performance test. | i. Collecting the scrubber liquid flow rate data, as specified in item 20.c. of Table 4 to this subpart; and<br>ii. Reducing the scrubber liquid flow rate data to 1-hour and 3-hour block averages; and<br>iii. Maintaining the 3-hour block average scrubber liquid flow rate at or above the minimum scrubber liquid flow rate established during the most recent performance test. |
| | d. If chemicals are added to the scrubber liquid, maintain the average scrubber chemical feed rate for each 3-hour block period at or above the minimum scrubber chemical feed rate established during the most recent performance test. | i. Collecting the scrubber chemical feed rate data, as specified in item 20.d. of Table 4 to this subpart; and<br>ii. Reducing the scrubber chemical feed rate data to 1-hour and 3-hour block averages; and |

| For . . . | For the following operating limit . . . | You must demonstrate continuous compliance by . . . |
|---|---|---|
| | | iii. Maintaining the 3-hour block average scrubber chemical feed rate at or above the minimum scrubber chemical feed rate established during the most recent performance test. |

TABLE 9 TO SUBPART SSSSS OF PART 63—CONTINUOUS COMPLIANCE WITH WORK PRACTICE STANDARDS

As stated in § 63.9810, you must show continuous compliance with the work practice standards for affected sources according to the following table:

| For . . . | For the following work practice standard . . . | You must demonstrate continuous compliance by . . . |
|---|---|---|
| 1. Each affected source listed in Table 3 to this subpart. | Each applicable work practice requirement listed in Table 3 to this subpart. | i. Performing each applicable work practice standard listed in Table 3 to this subpart; and<br>ii. Maintaining records that document the method and frequency for complying with each applicable work practice standard listed in Table 3 to this subpart, as required by §§ 63.10(b) and 63.9816(c)(2). |
| 2. Each basket or container that is used for holding fired refractory shapes in an existing shape preheater and autoclave during the pitch impregnation process. | Control POM emissions from any affected shape preheater. | i. Controlling emissions from the volatilization of residual pitch by implementing one of the work practice standards listed in item 1 of Table 3 to this subpart; and<br>ii. Recording the date and cleaning method each time you clean an affected basket or container. |
| 3. Each new or existing pitch working tank | Control POM emissions ..... | Capturing and venting emissions from the affected pitch working tank to the control device that is used to control emissions from an affected defumer or coking oven, or to a thermal or catalytic oxidizer that is comparable to the control device used on an affected defumer or coking oven. |
| 4. Each new or existing chromium refractory products kiln. | Minimize fuel-based HAP emissions ..... | i. Using natural gas, or equivalent, as the kiln fuel at all times except during periods of natural gas curtailment or supply interruption; and<br>ii. If you intend to use an alternative fuel, submitting a notification of alternative fuel use within 48 hours of the declaration of a per-iod of natural gas curtailment or supply interruption, as defined in § 63.9824; and<br>iii. Submitting a report of alternative fuel use within 10 working days after terminating the use of the alternative fuel, as specified in § 63.9814(g). |
| 5. Each existing clay refractory products kiln. | Minimize fuel-based HAP emissions ..... | i. Using natural gas, or equivalent, as the kiln fuel at all times except during periods of natural gas curtailment or supply interruption; and<br>ii. If you intend to use an alternative fuel, submitting a notification of alternative fuel use within 48 hours of the declaration of a per-iod of natural gas curtailment or supply interruption, as defined in § 63.9824; and<br>iii. Submitting a report of alternative fuel use within 10 working days after terminating the use of the alternative fuel, as specified in § 63.9814(g). |

TABLE 10 TO SUBPART SSSSS OF PART 63—REQUIREMENTS FOR REPORTS

As stated in § 63.9814, you must comply with the requirements for reports in the following table:

| You must submit a(n) . . . | The report must contain . . . | You must submit the report . . . |
|---|---|---|
| 1. Compliance report | The information in § 63.9814(c) through (f). | Semiannually according to the requirements in § 63.9814(a) through (f). |
| 2. Immediate startup, shutdown, and malfunction report if you had a startup, shutdown, or malfunction during the reporting period that is not consistent with your SSMP. | a. Actions taken for the event | By fax or telephone within 2 working days after starting actions inconsistent with the plan. |
| | b. The information in § 63.10(d)(5)(ii) | By letter within 7 working days after the end of the event unless you have made alternative arrangements with the permitting authority. |
| 3. Report of alternative fuel use | The information in § 63.9814(g) and items 4 and 5 of Table 9 to this subpart. | If you are subject to the work practice standard specified in item 3 or 4 of Table 3 to this subpart, and you use an alternative fuel in the affected kiln, by letter within 10 working days after terminating the use of the alternative fuel. |

TABLE 11 TO SUBPART SSSSS OF PART 63—APPLICABILITY OF GENERAL PROVISIONS TO SUBPART SSSSS

As stated in § 63.9820, you must comply with the applicable General Provisions requirements according to the following table:

| Citation | Subject | Brief description | Applies to subpart SSSSS |
|---|---|---|---|
| § 63.1 | Applicability | | Yes. |
| § 63.2 | Definitions | | Yes. |
| § 63.3 | Units and Abbreviations | | Yes. |
| § 63.4 | Prohibited Activities | Compliance date; circumvention, severability. | Yes. |
| § 63.5 | Construction/Reconstruction | Applicability; applications; approvals | Yes. |
| § 63.6(a) | Applicability | General Provisions (GP) apply unless compliance extension; GP apply to area sources that become major. | Yes. |
| § 63.6(b)(1)–(4) | Compliance Dates for New and Reconstructed Sources. | Standards apply at effective date; 3 years after effective date; upon startup; 10 years after construction or reconstruction commences for section 112(f). | Yes. |
| § 63.6(b)(5) | Notification | | Yes. |
| § 63.6(b)(6) | [Reserved] | | |
| § 63.6(b)(7) | Compliance Dates for New and Reconstructed Area Sources That Become Major. | Area sources that become major must comply with major source standards immediately upon becoming major, regardless of whether required to comply when they were area sources. | Yes. |
| § 63.6(c)(1)–(2) | Compliance Dates for Existing Sources | Comply according to date in subpart, which must be no later than 3 years after effective date; for section 112(f) standards, comply within 90 days of effective date unless compliance extension. | Yes. |
| § 63.6(c)(3)–(4) | [Reserved] | | |
| § 63.6(c)(5) | Compliance Dates for Existing Area Sources That Become Major. | Area sources that become major must comply with major source standards by date indicated in subpart or by equivalent time period (for example, 3 years). | Yes. |
| § 63.6(d) | [Reserved] | | |
| § 63.6(e)(1)–(2) | Operation & Maintenance | Operate to minimize emissions at all times; correct malfunctions as soon as practicable; requirements independently enforceable; information Administrator will use to determine if operation and maintenance requirements were met. | Yes. |

| Citation | Subject | Brief description | Applies to subpart SSSSS |
|---|---|---|---|
| § 63.6(e)(3) | Startup, Shutdown, and Malfunction Plan (SSMP). | | Yes. |
| § 63.6(f)(1) | Compliance Except During SSM | You must comply with emission standards at all times except during SSM. | Yes. |
| § 63.6(f)(2)–(3) | Methods for Determining Compliance | Compliance based on performance test, operation and maintenance plans, records, inspection. | Yes. |
| § 63.6(g)(1)–(3) | Alternative Standard | Procedures for getting an alternative standard. | Yes. |
| § 63.6(h)(1)–(9) | Opacity/Visible Emission (VE) Standards | | Not applicable. |
| § 63.6(i)(1)–(14) | Compliance Extension | Procedures and criteria for Administrator to grant compliance extension. | Yes. |
| § 63.6(j) | Presidential Compliance Exemption | President may exempt source category | Yes. |
| § 63.7(a)(1)–(2) | Performance Test Dates | Dates for conducting initial performance testing and other compliance demonstrations; must conduct 180 days after first subject to rule. | Yes. |
| § 63.7(a)(3) | Section 114 Authority | Administrator may require a performance test under CAA section 114 at any time. | Yes. |
| § 63.7(b)(1) | Notification of Performance Test | Must notify Administrator 60 days before the test. | Yes. |
| § 63.7(b)(2) | Notification of Rescheduling | Must notify Administrator 5 days before scheduled date and provide rescheduled date. | Yes. |
| § 63.7(c) | Quality Assurance/Test Plan | Requirements; test plan approval procedures; performance audit requirements; internal and external QA procedures for testing. | Yes. |
| § 63.7(d) | Testing Facilities | | Yes. |
| § 63.7(e)(1) | Conditions for Conducting Performance Tests. | Performance tests must be conducted under representative conditions; cannot conduct performance tests during SSM; not a violation to exceed standard during SSM. | No, § 63.9800 specifies requirements; Yes; Yes. |
| § 63.7(e)(2) | Conditions for Conducting Performance Tests. | Must conduct according to subpart and EPA test methods unless Administrator approves alternative. | Yes. |
| § 63.7(e)(3) | Test Run Duration | Must have three test runs of at least 1 hour each; compliance is based on arithmetic mean of three runs; conditions when data from an additional test run can be used. | Yes; Yes, except where specified in § 63.9800 for batch process sources; Yes. |
| § 63.7(f) | Alternative Test Method | | Yes. |
| § 63.7(g) | Performance Test Data Analysis | | Yes. |
| § 63.7(h) | Waiver of Test | | Yes. |
| § 63.8(a)(1) | Applicability of Monitoring Requirements | | Yes. |
| § 63.8(a)(2) | Performance Specifications | Performance Specifications in appendix B of 40 CFR part 60 apply. | Yes. |
| § 63.8(a)(3) | [Reserved] | | |
| § 63.8(a)(4) | Monitoring with Flares | | Not applicable. |
| § 63.8(b)(1) | Monitoring | Must conduct monitoring according to standard unless Administrator approves alternative. | Yes. |
| § 63.8(b)(2)–(3) | Multiple Effluents and Multiple Monitoring Systems. | Specific requirements for installing and reporting on monitoring systems. | Yes. |
| § 63.8(c)(1) | Monitoring System Operation and Maintenance. | Maintenance consistent with good air pollution control practices. | Yes. |
| § 63.8(c)(1)(i) | Routine and Predictable SSM | Reporting requirements for SSM when action is described in SSMP. | Yes. |
| § 63.8(c)(1)(ii) | SSM not in SSMP | Reporting requirements for SSM when action is not described in SSMP. | Yes. |
| § 63.8(c)(1)(iii) | Compliance with Operation and Maintenance Requirements. | How Administrator determines if source is complying with operation and maintenance requirements. | Yes. |
| § 63.8(c)(2)–(3) | Monitoring System Installation | Must install to get representative emission and parameter measurements. | Yes. |
| § 63.8(c)(4) | CMS Requirements | | No, § 63.9808 specifies requirements. |
| § 63.8(c)(5) | COMS Minimum Procedures | | Not applicable. |
| § 63.8(c)(6) | CMS Requirements | | Applies only to sources required to install and operate a THC CEMS. |

| Citation | Subject | Brief description | Applies to subpart SSSSS |
|---|---|---|---|
| § 63.8(c)(7)(i)(A) | CMS Requirements | | Applies only to sources required to install and operate a THC CEMS. |
| § 63.8(c)(7)(i)(B) | CMS Requirements | | Applies only to sources required to install and operate a THC CEMS. |
| § 63.8(c)(7)(i)(C) | CMS Requirements | | Not applicable. |
| § 63.8(c)(7)(ii) | CMS Requirements | Corrective action required when CMS is out of control. | Yes. |
| § 63.8(c)(8) | CMS Requirements | | Yes. |
| § 63.8(d) | CMS Quality Control | | Applies only to sources required to install and operate a THC CEMS. |
| § 63.8(e) | CMS Performance Evaluation | | Applies only to sources required to install and operate a THC CEMS. |
| § 63.8(f)(1)–(5) | Alternative Monitoring Method | | Yes. |
| § 63.8(f)(6) | Alternative to Relative Accuracy Test | | Yes. |
| § 63.8(g) | Data Reduction | | Applies only to sources required to install and operate a THC CEMS. |
| § 63.9(a) | Notification Requirements | | Yes. |
| § 63.9(b)(1)–(5) | Initial Notifications | | Yes. |
| § 63.9(c) | Request for Compliance Extension | | Yes. |
| § 63.9(d) | Notification of Special Compliance Requirements for New Source. | | Yes. |
| § 63.9(e) | Notification of Performance Test | Notify Administrator 60 days prior | Yes. |
| § 63.9(f) | Notification of VE/Opacity Test | | Not applicable. |
| § 63.9(g) | Additional Notifications When Using CMS | | Applies only to sources required to install and operate a THC CEMS. |
| § 63.9(h) | Notification of Compliance Status | | Yes. |
| § 63.9(i) | Adjustment of Submittal Deadlines | | Yes. |
| § 63.9(j) | Change in Previous Information | | Yes. |
| § 63.9(k) | Notifications | Electronic reporting procedures | Yes, only as specified in § 63.9(j). |
| § 63.10(a) | Recordkeeping/Reporting | | Yes. |
| § 63.10(b)(1) | Recordkeeping/Reporting | | Yes. |
| § 63.10(b)(2)(i)–(v). | Records Related to Startup, Shutdown, and Malfunction. | | Yes. |
| § 63.10(b)(2)(vi) and (x–xi). | CMS Records | | Yes. |
| § 63.10(b)(2)(vii)–(ix). | Records | Measurements to demonstrate compliance with emission limitations; performance test, performance evaluation, and visible emission observation results; measurements to determine conditions of performance tests and performance evaluations. | Yes. |
| § 63.10(b)(2)(xii) | Records | Records when under waiver | Yes. |
| § 63.10(b)(2)(xiii) | Records | Records when using alternative to relative accuracy test. | Not applicable. |
| § 63.10(b)(2)(xiv) | Records | All documentation supporting Initial Notification and Notification of Compliance Status. | Yes. |
| § 63.10(b)(3) | Records | Applicability Determinations | Yes. |
| § 63.10(c)(1)–(6), (9)–(15). | Records | Additional Records for CMS | Not applicable. |
| § 63.10(c)(7)–(8) | Records | Records of excess emissions and parameter monitoring exceedances for CMS. | No, § 63.9816 specifies requirements. |
| § 63.10(d)(1) | General Reporting Requirements | Requirements for reporting | Yes. |
| § 63.10(d)(2) | Report of Performance Test Results | When to submit to Federal or State authority. | Yes. |
| § 63.10(d)(3) | Reporting Opacity or VE Observations | | Not applicable. |
| § 63.10(d)(4) | Progress Reports | Must submit progress reports on schedule if under compliance extension. | Yes. |

| Citation | Subject | Brief description | Applies to subpart SSSSS |
|---|---|---|---|
| §63.10(d)(5) | Startup, Shutdown, and Malfunction Reports. | Contents and submission | Yes. |
| §63.10(e)(1)–(2) | Additional CMS Reports | | Applies only to sources required to install and operate a THC CEMS. |
| §63.10(e)(3) | Reports | | No, §63.9814 specifies requirements. |
| §63.10(e)(4) | Reporting COMS data | | Not applicable. |
| §63.10(f) | Waiver for Recordkeeping/Reporting | | Yes. |
| §63.11 | Flares | | Not applicable. |
| §63.12 | Delegation | | Yes. |
| §63.13 | Addresses | | Yes. |
| §63.14 | Incorporation by Reference | | Yes. |
| §63.15 | Availability of Information | | Yes. |

[68 FR 18747, Apr. 16, 2003, as amended at 85 FR 73918, Nov. 19, 2020]

## Subpart TTTTT—National Emissions Standards for Hazardous Air Pollutants for Primary Magnesium Refining

SOURCE: 68 FR 58620, Oct. 10, 2003, unless otherwise noted.

WHAT THIS SUBPART COVERS

### §63.9880 What is the purpose of this subpart?

This subpart establishes national emission standards for hazardous air pollutants (NESHAP) for primary magnesium refineries. This subpart also establishes requirements to demonstrate initial and continuous compliance with all applicable emission limitations, work practice standards, and operation and maintenance requirements.

### §63.9881 Am I subject to this subpart?

You are subject to this subpart if you own or operate a primary magnesium refinery that is (or is part of) a major source of hazardous air pollutant (HAP) emissions. Your primary magnesium refinery is a major source of HAP if it emits or has the potential to emit any single HAP at a rate of 10 tons or more per year or any combination of HAP at a rate of 25 tons or more per year.

### §63.9882 What parts of my plant does this subpart cover?

(a) The affected sources are each new and existing primary magnesium refining facility.

(b) This subpart covers emissions from each spray dryer stack, magnesium chloride storage bins scrubber stack, melt/reactor system stack, and launder off-gas system stack at your primary magnesium refining facility. This subpart also covers fugitive dust emissions.

(c) Each primary magnesium refining facility is existing if you commenced construction or reconstruction of the affected source before January 22, 2003.

(d) Each primary magnesium refining facility is new if you commence construction or reconstruction of the affected source on or after January 22, 2003. An affected source is reconstructed if it meets the definition of reconstruction in §63.2.

### §63.9883 When do I have to comply with this subpart?

(a) If you have an existing source, you must comply with each emission limitation, work practice standard, and operation and maintenance requirement in this subpart that applies to you no later than October 11, 2004.

(b) If you have a new affected source and its initial startup date is on or before October 11, 2003, you must comply with each emission limitation, work practice standard, and operation and maintenance requirement in this subpart that applies to you by October 10, 2003.

(c) If you have a new affected source and its initial startup date is after October 10, 2003, you must comply with

each emission limitation, work practice standard, and operation and maintenance requirement in this subpart that applies to you upon initial startup.

(d) If your primary magnesium refinery is an area source that becomes a major source of HAP, the compliance dates in paragraphs (d)(1) and (2) of this section apply to you:

(1) Any portion of the existing primary magnesium refinery that is a new affected source or a new reconstructed source must be in compliance with this subpart upon startup.

(2) All other parts of the primary magnesium refinery must be in compliance with this subpart no later than 2 years after it becomes a major source.

(e) You must meet the notification and schedule requirements in § 63.9930. Several of these notifications must be submitted before the compliance date for your affected source.

EMISSION LIMITATIONS AND WORK PRACTICE STANDARDS

### § 63.9890 What emission limitations must I meet?

(a) You must meet each emission limit in Table 1 to this subpart that applies to you.

(b) For each wet scrubber applied to meet any particulate matter, particulate matter less than 10 microns ($PM_{10}$), chlorine, hydrochloric acid, or dioxins/furans emission limit in Table 1 to this subpart, you must maintain the hourly average pressure drop and scrubber liquid flow rate at or above the minimum level established during the initial or subsequent performance test.

### § 63.9891 What work practice standards must I meet for my fugitive dust sources?

(a) You must prepare and at all times operate according to a fugitive dust emissions control plan that describes in detail the measures that will be put in place to control fugitive dust emissions from all unpaved roads and other unpaved operational areas.

(b) You must submit a copy of your fugitive dust emissions control plan for approval to the Administrator on or before the applicable compliance date for the affected source as specified in § 63.9883. The requirement to operate according to the fugitive dust emissions control plan must be incorporated by reference in the source's operating permit issued by the permitting authority under 40 CFR part 70 or 40 CFR part 71.

(c) You can use an existing fugitive dust emissions control plan provided it meets the requirements in paragraphs (c)(1) through (3) of this section.

(1) The plan satisfies the requirements of paragraph (a) of this section.

(2) The plan describes the current measures to control fugitive dust emission sources.

(3) The plan has been approved as part of a State implementation plan or title V permit.

(d) You must maintain a current copy of the fugitive dust emissions control plan on-site and available for inspection upon request. You must keep the plan for the life of the affected source or until the affected source is no longer subject to the requirements of this subpart.

OPERATION AND MAINTENANCE REQUIREMENTS

### § 63.9900 What are my operation and maintenance requirements?

(a) As required by § 63.6(e)(1)(i), you must always operate and maintain your affected source, including air pollution control and monitoring equipment, in a manner consistent with good air pollution control practices for minimizing emissions at least to the levels required by this subpart.

(b) You must prepare and operate at all times according to a written operation and maintenance plan for each control device subject to an operating limit in § 63.9890(b). Each plan must address preventative maintenance for each control device, including a preventative maintenance schedule that is consistent with the manufacturer's instructions for routine and long-term maintenance.

(c) You must maintain a current copy of the operation and maintenance plan required in paragraph (b) of this section on-site and available for inspection upon request. You must keep the plan for the life of the affected source or until the affected source is no

longer subject to the requirements of this subpart.

GENERAL COMPLIANCE REQUIREMENTS

### § 63.9910 What are my general requirements for complying with this subpart?

(a) You must be in compliance with the emission limitations, work practice standards, and operation and maintenance requirements in this subpart at all times, except during periods of startup, shutdown, and malfunction as defined in § 63.2.

(b) You must develop a written startup, shutdown, and malfunction plan according to the provisions in § 63.6(e)(3).

[68 FR 58620, Oct. 10, 2003, as amended at 71 FR 20471, Apr. 20, 2006]

INITIAL COMPLIANCE REQUIREMENTS

### § 63.9911 By what date must I conduct performance tests or other initial compliance demonstrations?

(a) As required in § 63.7(a)(2), you must conduct a performance test to demonstrate initial compliance with each emission limit in Table 1 to this subpart that applies to you as indicated in paragraphs (a)(1) through (3) of this section:

(1) Within 180 calendar days after the compliance date that is specified in § 63.9883 for your existing affected source;

(2) By April 7, 2004 for a new source that has an initial startup date before October 10, 2003; or

(3) Within 180 days after initial startup for a new source that has an initial startup date after October 10, 2003.

(b) For each operation and maintenance requirement that applies to you where initial compliance is not demonstrated using a performance test, you must demonstrate initial compliance within 30 calendar days after the compliance date that is specified for your affected source in § 63.9883.

(c) If you commenced construction or reconstruction between January 22, 2003 and October 10, 2003, you must demonstrate initial compliance with either the proposed emission limitation or the promulgated emission limitation no later than April 7, 2004 or no later than 180 calendar days after startup of the source, whichever is later, according to § 63.7(a)(2)(ix).

(d) If you commenced construction or reconstruction between January 22, 2003 and October 10, 2003, and you chose to comply with the proposed emission limit when demonstrating initial compliance, you must conduct a second performance test to demonstrate compliance with the promulgated emission limit by April 11, 2005, or after startup of the source, whichever is later, according to § 63.7(a)(2)(ix).

### § 63.9912 When must I conduct subsequent performance tests?

You must conduct subsequent performance tests to demonstrate continuous compliance with all applicable emission limits in Table 1 to this subpart no less frequently than twice (at mid-term and renewal) during each term of your title V operating permit.

### § 63.9913 What test methods and other procedures must I use to demonstrate initial compliance with the emission limits for particulate matter and $PM_{10}$?

(a) You must conduct each performance test that applies to your affected source according to the requirements in § 63.7(e)(1).

(b) To determine compliance with the applicable emission limits for particulate matter in Table 1 to this subpart, you must follow the test methods and procedures in paragraphs (b)(1) and (2) of this section.

(1) Determine the concentration of particulate matter according to the following test methods in appendix A to 40 CFR part 60:

(i) Method 1 to select sampling port locations and the number of traverse points. Sampling ports must be located at the outlet of the control device and prior to any releases to the atmosphere.

(ii) Method 2, 2F, or 2G to determine the volumetric flow rate of the stack gas.

(iii) Method 3, 3A, or 3B to determine the dry molecular weight of the stack gas.

(iv) Method 4 to determine the moisture content of the stack gas.

(v) Method 5 or 5D, as applicable, to determine the concentration of particulate matter.

(vi) Method 201 or 201A, as applicable, to determine the concentration of $PM_{10}$.

(2) Collect a minimum sample volume of 60 dry standard cubic feet (dscf) during each particulate matter or $PM_{10}$ test run. Three valid test runs are needed to comprise a performance test.

(c) Compute the mass emissions rate in pounds per hour (lbs/hr) for each test run using Equation 1 of this section:

$$E_{lbs/hr} = \frac{C_s \times Q_{std} \times 60}{7{,}000} \qquad \text{(Eq. 1)}$$

Where:

$E_{lbs/hr}$ = Mass emissions rate of particulate matter or $PM_{10}$ (lbs/hr);

$C_s$ = Concentration of particulate matter or $PM_{10}$ in the gas stream, grains per dry standard cubic feet (gr/dscf);

$Q_{std}$ = Volumetric flow rate of stack gas, dry standard cubic feet per minute (dscfm);

60 = Conversion factor, minutes per hour (min/hr); and

7,000 = Conversion factor, grains per pound (gr/lb).

### § 63.9914 What test methods and other procedures must I use to demonstrate initial compliance with chlorine and hydrochloric acid emission limits?

(a) You must conduct each performance test that applies to your affected source according to the requirements in § 63.7(e)(1).

(b) To determine compliance with the applicable emission limits for chlorine and hydrochloric acid in Table 1 to this subpart, you must follow the test methods and procedures specified in paragraphs (b)(1) and (2) of this section.

(1) Determine the concentration of chlorine and hydrochloric acid according to the following test methods in appendix A to 40 CFR part 60:

(i) Method 1 to select sampling port locations and the number of traverse points. Sampling ports must be located at the outlet of the control device and prior to any releases to the atmosphere.

(ii) Method 2, 2F, or 2G to determine the volumetric flow of the stack gas.

(iii) Method 3, 3A, or 3B to determine the dry molecular weight of the stack gas.

(iv) Method 4 to determine the moisture content of the stack gas.

(v) Method 26 or 26A, as applicable, to determine the concentration of hydrochloric acid and chlorine.

(2) Collect a minimum sample of 60 dscf during each test run for chlorine and hydrochloric acid. Three valid test runs are needed to comprise a performance test.

(c) Compute the mass emissions rate (lbs/hr) for each test run using Equation 1 of this section:

$$E_{lbs/hr} = \frac{C_s \times Q_{std} \times 60}{35.31 \times 454{,}000} \qquad \text{(Eq. 1)}$$

Where:

$E_{lbs/hr}$ = Mass emissions rate of chlorine or hydrochloric acid (lbs/hr);

$C_s$ = Concentration of chlorine or hydrochloric acid in the gas stream, milligrams per dry standard cubic meter (mg/dscm);

$Q_{std}$ = Volumetric flow rate of stack gas (dscfm);

60 = Conversion factor (min/hr);

35.31 = Conversion factor (dscf/dscm); and

454,000 = Conversion factor (mg/lb).

### § 63.9915 What test methods and other procedures must I use to demonstrate initial compliance with dioxin/furan emission limits?

(a) You must conduct each performance test that applies to your affected source according to the requirements in § 63.7(e)(1).

(b) To determine compliance with the applicable emission limit for dioxins/furans in Table 1 to this subpart, you must follow the test methods and procedures specified in paragraphs (b)(1) and (2) of this section.

(1) Determine the concentration of dioxin and furan according to the following test methods in appendix A to 40 CFR part 60:

(i) Method 1 to select sampling port locations and the number of traverse points. Sampling ports must be located at the outlet of the control device and prior to any releases to the atmosphere.

(ii) Method 2, 2F, or 2G to determine the volumetric flow of the stack gas.

(iii) Method 3, 3A, or 3B to determine the dry molecular weight of the stack gas.

(iv) Method 4 to determine the moisture content of the stack gas.

(v) Method 23 to determine the concentration of dioxins/furans. For each

dioxin/furan congener measured in accordance with this paragraph (b)(v), multiply the congener concentration by its corresponding toxic equivalency factor specified in Table 2 of this subpart.

(2) Collect a minimum sample of 100 dscf during each test run. Three valid test runs are needed to comprise a performance test.

### § 63.9916 What test methods and other procedures must I use to establish and demonstrate initial compliance with the operating limits?

For a wet scrubber subject to operating limits for pressure drop and scrubber water flow rate in § 63.9890(b), you must establish site-specific operating limits according to the procedures in paragraphs (a) and (b) of this section.

(a) Using the continuous parameter monitoring system (CPMS) required in § 63.9920, measure and record the pressure drop and scrubber water flow rate at least every 15 minutes during each run of the particulate matter performance test.

(b) Compute and record the average pressure drop and scrubber water flow rate for each individual test run. Your operating limits are the lowest average individual pressure drop and scrubber water flow rate values in any of the three runs that meet the applicable emission limit.

### § 63.9917 How do I demonstrate initial compliance with the emission limitations and work practice standards that apply to me?

(a) For each affected source subject to an emission limit in Table 1 to this subpart, you have demonstrated initial compliance if:

(1) You have met the conditions in Table 3 to this subpart; and

(2) For each wet scrubber subject to the operating limits for pressure drop and scrubber water flow rate in § 63.9890(b), you have established appropriate site-specific operating limits and have a record of the pressure drop and scrubber water flow rate measured during the performance test in accordance with § 63.9916.

(b) You have demonstrated initial compliance with the work practice standards in § 63.9891 if you have certified in your notification of compliance status that:

(1) You have prepared a fugitive dust emissions control plan according to the requirements in § 63.9891 and submitted the plan for approval; and

(2) You will operate according to the requirements in the plan.

### § 63.9918 How do I demonstrate initial compliance with the operation and maintenance requirements that apply to me?

You must demonstrate initial compliance by certifying in your notification of compliance status that you have met the requirements in paragraphs (a) and (b) of this section.

(a) You have prepared the operation and maintenance plan according to the requirements in § 63.9910; and

(b) You will operate each control device according to the procedures in the plan.

## CONTINUOUS COMPLIANCE REQUIREMENTS

### § 63.9920 What are my continuous monitoring requirements?

For each wet scrubber subject to the operating limits for pressure drop and scrubber water flow rates in § 63.9890(b), you must at all times monitor the hourly average pressure drop and liquid flow rate using a CPMS according to the requirements in § 63.9921(a).

### § 63.9921 What are the installation, operation and maintenance requirements for my monitors?

(a) For each wet scrubber subject to the operating limits in § 63.9890(b) for pressure drop and scrubber water flow rate, you must install, operate, and maintain each CPMS according to the requirements in paragraphs (a)(1) and (2) of this section.

(1) For the pressure drop CPMS, you must:

(i) Locate the pressure sensor(s) in or as close to a position that provides a representative measurement of the pressure and that minimizes or eliminates pulsating pressure, vibration, and internal and external corrosion.

(ii) Use a gauge with a minimum measurement sensitivity of 0.5 inch of water or a transducer with a minimum measurement sensitivity of 1 percent of the pressure range.

(iii) Check the pressure tap for pluggage daily.

(iv) Using a manometer, check gauge calibration quarterly and transducer calibration monthly.

(v) Conduct calibration checks any time the sensor exceeds the manufacturer's specified maximum operating pressure range, or install a new pressure sensor.

(vi) At least monthly, inspect all components for integrity, all electrical connections for continuity, and all mechanical connections for leakage.

(2) For the scrubber water flow rate CPMS, you must:

(i) Locate the flow sensor and other necessary equipment in a position that provides a representative flow and that reduces swirling flow or abnormal velocity distributions due to upstream and downstream disturbances.

(ii) Use a flow sensor with a minimum measurement sensitivity of 2 percent of the flow rate.

(iii) Conduct a flow sensor calibration check at least semiannually according to the manufacturer's instructions.

(iv) At least monthly, inspect all components for integrity, all electrical connections for continuity, and all mechanical connections for leakage.

(b) You must install, operate, and maintain each CPMS for a wet scrubber according to the requirements in paragraphs (b)(1) through (3) of this section.

(1) Each CPMS must complete a minimum of one cycle of operation for each successive 15-minute period.

(2) Each CPMS must have valid data for at least 95 percent of every averaging period.

(3) Each CPMS must determine and record the hourly average of all recorded readings.

### § 63.9922 How do I monitor and collect data to demonstrate continuous compliance?

(a) Except for monitoring malfunctions, associated repairs, and required quality assurance or control activities (including, as applicable, calibration checks and required zero and span adjustments), you must monitor continuously (or collect data at all required intervals) at all times an affected source is operating.

(b) You may not use data recorded during monitoring malfunctions, associated repairs, and required quality assurance or control activities in data averages and calculations used to report emission or operating levels or to fulfill a minimum data availability requirement, if applicable. You must use all the data collected during all other periods in assessing compliance.

(c) A monitoring malfunction is any sudden, infrequent, not reasonably preventable failure of the monitoring to provide valid data. Monitoring failures that are caused in part by poor maintenance or careless operation are not malfunctions.

### § 63.9923 How do I demonstrate continuous compliance with the emission limitations and work practice standards that apply to me?

(a) For each affected source subject to an emission limit in Table 1 to this subpart, you must demonstrate continuous compliance according to the requirements in Table 4 to this subpart.

(b) For each wet scrubber subject to the operating limits for pressure drop and scrubber water flow rate in § 63.9890(b), you must demonstrate continuous compliance according to the requirements in paragraphs (b)(1) and (2) of this section.

(1) Collecting and reducing the monitoring data according to § 63.9921(b); and

(2) Maintaining the hourly average pressure drop and scrubber water flow rate at or above the minimum level established during the initial or subsequent performance.

(c) You must demonstrate continuous compliance with the work practice standards in § 63.9891 by operating according to the requirements in your fugitive dust emissions control plan and recording information needed to document conformance with the requirements.

### §63.9924 How do I demonstrate continuous compliance with the operation and maintenance requirements that apply to me?

For each emission point subject to an emission limit in Table 1 to this subpart, you must demonstrate continuous compliance with the operation and maintenance requirements in §63.9900 by performing preventive maintenance for each control device according to §63.9900(b) and recording all information needed to document conformance with these requirements.

### §63.9925 What other requirements must I meet to demonstrate continuous compliance?

(a) *Deviations*. You must report each instance in which you did not meet each emission limitation in §63.9890 or work practice standard in §63.9891 that applies to you. This includes periods of startup, shutdown, and malfunction. You must also report each instance in which you did not meet each operation and maintenance requirement required in §63.9900 that applies to you. These instances are deviations from the emission limitations, work practice standards, and operation and maintenance requirements in this subpart. These deviations must be reported according to the requirements in §63.9931.

(b) *Startups, shutdowns, and malfunctions*. (1) Consistent with §§63.6(e) and 63.7(e)(1), deviations that occur during a period of startup, shutdown, or malfunction are not violations if you demonstrate to the Administrator's satisfaction that you were operating in accordance with §63.6(e)(1).

(2) The Administrator will determine whether deviations that occur during a period of startup, shutdown, or malfunction are violations, according to the provisions in §63.6(e).

[68 FR 58620, Oct. 10, 2003, as amended at 71 FR 20471, Apr. 20, 2006]

NOTIFICATIONS, REPORTS, AND RECORDS

### §63.9930 What notifications must I submit and when?

(a) You must submit all of the notifications in §§63.7(b) and (c), 63.8(f)(4), 63.9(b), and 63.9(h) that apply to you by the specified dates.

(b) As specified in §63.9(b)(2), if you start up your affected source before October 10, 2003, you must submit your initial notification no later than 120 calendar days after October 10, 2003, or no later than 120 days after the source becomes subject to this subpart, whichever is later.

(c) As specified in §63.9(b)(3), if you start your new affected source on or after October 10, 2003, you must submit your initial notification no later that 120 calendar days after you become subject to this subpart.

(d) If you are required to conduct a performance test, you must submit a notification of intent to conduct a performance test at least 60 calendar days before the performance test is scheduled to begin as required in §63.7(b)(1).

(e) If you are required to conduct a performance test or other initial compliance demonstration, you must submit a notification of compliance status according to §63.9(h)(2)(ii), and the requirements in paragraphs (e)(1) and (2) of this section:

(1) For each initial compliance demonstration that does not include a performance test, you must submit the notification of compliance status before the close of business on the 30th calendar day following completion of the initial compliance demonstration.

(2) For each initial compliance demonstration that does include a performance test, you must submit the notification of compliance status, including the performance test results, before the close of business on the 60th calendar day following the completion of the performance test according to §63.10(d)(2).

[68 FR 58620, Oct. 10, 2003, as amended at 85 FR 73918, Nov. 19, 2020]

### §63.9931 What reports must I submit and when?

(a) *Compliance report due dates*. Unless the Administrator has approved a different schedule, you must submit a semiannual compliance report to your permitting authority according to the requirements in paragraphs (a) (1) through (5) of this section.

(1) The first compliance report must cover the period beginning on the compliance date that is specified for your affected source in §63.9883 and ending

on June 30 or December 31, whichever date comes after the compliance date that is specified for your source in § 63.9883.

(2) The first compliance report must be postmarked or delivered no later than July 31 or January 31, whichever date comes first after your compliance report is due.

(3) Each subsequent compliance report must cover the semiannual reporting period from January 1 through June 30 or the semiannual reporting period from July 1 through December 31.

(4) Each subsequent compliance report must be postmarked or delivered no later than July 31 or January 31, whichever date comes first after the end of the semiannual reporting period.

(5) For each affected source that is subject to permitting regulations pursuant to 40 CFR part 70 or 40 CFR part 71, and if the permitting authority has established dates for submitting semiannual reports pursuant to 40 CFR 70.6(a)(3)(iii)(A) or 40 CFR 71.6(a)(3)(iii)(A), you may submit the first and subsequent compliance reports according to the dates the permitting authority has established instead of according to the dates in paragraphs (a)(1) through (4) of this section.

(b) *Compliance report contents.* Each compliance report must include the information in paragraphs (b)(1) through (3) of this section and, as applicable, paragraphs (b)(4) through (8) of this section.

(1) Company name and address.

(2) Statement by a responsible official, with that official's name, title, and signature, certifying the truth, accuracy, and completeness of the content of the report.

(3) Date of report and beginning and ending dates of the reporting period.

(4) If you had a startup, shutdown, or malfunction during the reporting period and you took actions consistent with your startup, shutdown, and malfunction plan, the compliance report must include the information in § 63.10(d)(5)(i).

(5) If there were no deviations from the continuous compliance requirements in §§ 63.9923 and 63.9924 that apply to you, a statement that there were no deviations from the emission limitations, work practice standards, or operation and maintenance requirements during the reporting period.

(6) If there were no periods during which a CPMS was out-of-control as specified in § 63.8(c)(7), a statement that there were no periods during which the CPMS was out-of-control during the reporting period.

(7) For each deviation from an emission limitation in § 63.9890 that occurs at an affected source where you are not using a CPMS to comply with an emission limitation in this subpart, the compliance report must contain the information in paragraphs (b)(1) through (4) of this section and the information in paragraphs (b)(7)(i) and (ii) of this section. This includes periods of startup, shutdown, and malfunction.

(i) The total operating time of each affected source during the reporting period.

(ii) Information on the number, duration, and cause of deviations (including unknown cause, if applicable) as applicable and the corrective action taken.

(8) For each deviation from an emission limitation occurring at an affected source where you are using a CPMS to comply with the emission limitation in this subpart, you must include the information in paragraphs (b)(1) through (4) of this section and the information in paragraphs (b)(8)(i) through (xi) of this section. This includes periods of startup, shutdown, and malfunction.

(i) The date and time that each malfunction started and stopped.

(ii) The date and time that each continuous monitoring was inoperative, except for zero (low-level) and high-level checks.

(iii) The date, time, and duration that each continuous monitoring system was out-of-control, including the information in § 63.8(c)(8).

(iv) The date and time that each deviation started and stopped, and whether each deviation occurred during a period of startup, shutdown, or malfunction or during another period.

(v) A summary of the total duration of the deviation during the reporting period and the total duration as a percent of the total source operating time during that reporting period.

(vi) A breakdown of the total duration of the deviations during the reporting period including those that are due to startup, shutdown, control equipment problems, process problems, other known causes, and other unknown causes.

(vii) A summary of the total duration of continuous monitoring system downtime during the reporting period and the total duration of continuous monitoring system downtime as a percent of the total source operating time during the reporting period.

(viii) A brief description of the process units.

(ix) A brief description of the continuous monitoring system.

(x) The date of the latest continuous monitoring system certification or audit.

(xi) A description of any changes in continuous monitoring systems, processes, or controls since the last reporting period.

(c) *Immediate startup, shutdown, and malfunction report.* If you had a startup, shutdown, or malfunction during the semiannual reporting period that was not consistent with your startup, shutdown, and malfunction plan, you must submit an immediate startup, shutdown, and malfunction report according to the requirements in § 63.10(d)(5)(ii).

(d) *Part 70 monitoring report.* If you have obtained a title V operating permit for an affected source pursuant to 40 CFR part 70 or 40 CFR part 71, you must report all deviations as defined in this subpart in the semiannual monitoring report required by 40 CFR 70.6(a)(3)(iii)(A) or 40 CFR 71.6(a)(3)(iii)(A). If you submit a compliance report for an affected source along with, or as part of, the semiannual monitoring report required by 40 CFR 70.6(a)(3)(iii)(A) or 40 CFR 71.6(a)(3)(iii)(A), and the compliance report includes all the required information concerning deviations from any emissions limitation, work practice standards, or operation and maintenance requirement in this subpart, submission of the compliance report satisfies any obligation to report the same deviations in the semiannual monitoring report. However, submission of the compliance report does not otherwise affect any obligation you may have to report deviations from permit requirements for an affected source to your permitting authority.

### § 63.9932 What records must I keep?

(a) You must keep the records as indicated in paragraphs (a)(1) through (3) of this section:

(1) A copy of each notification and report that you submitted to comply with this subpart, including all documentation supporting any initial notification or notification of compliance status that you submitted, according to the requirements in § 63.10(b)(2)(xiv).

(2) The records in § 63.6(e)(3)(iii) through (v) related to startup, shutdown, and malfunction.

(3) Records of performance tests and performance evaluations as required in § 63.10(b)(2)(viii).

(b) You must keep the records required in §§ 63.9932 and 63.9933 to show continuous compliance with each emission limitation, work practice standard, and operating and maintenance requirement that applies to you.

### § 63.9933 In what form and how long must I keep my records?

(a) Your records must be in a form suitable and readily available for expeditious review, according to § 63.10(b)(1).

(b) As specified in § 63.10(b)(1), you must keep each record for 5 years following the date of each occurrence, measurement, maintenance, corrective action, report, or record.

(c) You must keep each record on site for at least 2 years after the date of each occurrence, measurement, maintenance, corrective action, report, or record according to § 63.10(b)(1). You can keep the records off site for the remaining 3 years.

(d) You must keep your fugitive dust emissions control plan and your operation and maintenance plan on-site according to the requirements in §§ 63.9891(d) and 63.9900(c).

OTHER REQUIREMENTS AND INFORMATION

### § 63.9940 What parts of the General Provisions apply to me?

Table 4 to this subpart shows which parts of the General Provisions in §§ 63.1 through 63.15 apply to you.

### § 63.9941 Who implements and enforces this subpart?

(a) This subpart can be implemented and enforced by us, the United States Environmental Protection Agency (U.S. EPA) or a delegated authority such as your State, local, or tribal agency. If the EPA Administrator has delegated authority to your State, local, or tribal agency, then that agency has the authority to implement and enforce this subpart. You should contact your EPA Regional Office to find out if this subpart is delegated to your State, local, or tribal agency.

(b) In delegating implementation and enforcement authority of this subpart to a State, local, or tribal agency under subpart E of this part, the authorities contained in paragraph (c) of this section are retained by the Administrator of the EPA and are not transferred to the State, local, or tribal agency.

(c) The authorities that will not be delegated to State, local, or tribal agencies are specified in paragraphs (c)(1) through (4) of this section.

(1) Approval of alternatives to the non-opacity emission limitations in § 63.9890 and work practice standards in § 63.9891 under § 63.6(g).

(2) Approval of major alternatives to test methods under § 63.7(e)(2)(ii) and (f) and as defined in § 63.90.

(3) Approval of major alternatives to monitoring under § 63.8(f) and as defined in § 63.90.

(4) Approval of major alternatives to recordkeeping and reporting under § 63.10(f) and as defined in § 63.90.

### § 63.9942 What definitions apply to this subpart?

Terms used in this subpart are defined in the Clean Air Act, in § 63.2, and in this section as follows:

*Chlorine plant bypass scrubber* means the wet scrubber that captures chlorine gas during a chlorine plant shut down or failure.

*Deviation* means any instance in which an affected source subject to this subpart, or an owner or operator of such a source:

(1) Fails to meet any requirement or obligation established by this subpart, including but not limited to any emission limitation (including operating limits) or operation and maintenance requirement;

(2) Fails to meet any term or condition that is adopted to implement an applicable requirement in this subpart and that is included in the operating permit for any affected source required to obtain such a permit; or

(3) Fails to meet any emission limitation in this subpart during startup, shutdown, or malfunction, regardless of whether or not such failure is permitted by this subpart.

*Emission limitation* means any emission limit, opacity limit, or operating limit.

*Launder off-gas system* means a system that collects chlorine and hydrochloric acid fumes from collection points within the melt/reactor system building. The system then removes particulate matter and hydrochloric acid from the collected gases prior to discharge to the atmosphere.

*Magnesium chloride storage bins* means vessels that store dried magnesium chloride powder produced from the spray drying operation.

*Melt/reactor system* means a system that melts and chlorinates dehydrated brine to produce high purity molten magnesium chloride feed for electrolysis.

*Primary magnesium refining* means the production of magnesium metal and magnesium metal alloys from natural sources of magnesium chloride such as sea water or water from the Great Salt Lake and magnesium bearing ores.

*Responsible official* means responsible official as defined in § 63.2.

*Spray dryer* means dryers that evaporate brine to form magnesium powder by contact with high temperature gases exhausted from gas turbines.

*Wet scrubber* means a device that contacts an exhaust gas with a liquid to remove particulate matter and acid gases from the exhaust. Examples are packed-bed wet scrubbers and venturi scrubbers.

*Work practice standard* means any design, equipment, work practice, or operational standard, or combination thereof, that is promulgated pursuant to section 112(h) of the Clean Air Act.

TABLE 1 TO SUBPART TTTTT OF PART 63—EMISSION LIMITS

As required in §63.9890(a), you must comply with each applicable emission limit in the following table:

| For . . . | You must comply with each of the following . . . |
|---|---|
| 1. Each spray dryer stack | a. You must not cause to be discharged to the atmosphere any gases that contain particulate matter in excess of 100 lbs/hr; and<br>b. You must not cause to be discharged to the atmosphere any gases that contain hydrochloric acid in excess of 200 lbs/hr. |
| 2. Each magnesium chloride storage bins scrubber stack. | a. You must not cause to be discharged to the atmosphere any gases that contain hydrochloric acid in excess of 47.5 lbs/hr and 0.35 gr/dscf; and<br>b. You must not cause to be discharged to the atmosphere any gases that contain $PM_{10}$ in excess of 2.7 lbs/hr and 0.016 gr/dscf. |
| 3. Each melt/reactor system stack | a. You must not cause to be discharged to the atmosphere any gases that contain $PM_{10}$ in excess of 13.1 lbs/hr; and<br>b. You must not cause to be discharged to the atmosphere any gases that contain hydrochloric acid in excess of 7.2 lbs/hr; and<br>c. You must not cause to be discharged to the atmosphere any gases that contain chlorine in excess of 100 lbs/hr; and<br>d. You must not cause to be discharged to the atmosphere any gases that contain 36 ng TEQ/dscm corrected to 7% oxygen. |
| 4. Each launder off-gas system stack | a. You must not cause to be discharged to the atmosphere any gases that contain particulate matter in excess of 37.5 lbs/hr; and<br>b. You must not cause to be discharged to the atmosphere any gases that contain hydrochloric acid in excess of 46.0 lbs/hr; and<br>c. You must not cause to be discharged to the atmosphere any gases that contain chlorine in excess of 26.0 lbs/hr. |

TABLE 2 TO SUBPART TTTTT OF PART 63—TOXIC EQUIVALENCY FACTORS

| Dioxin/furan congener | Toxic equivalency factor |
|---|---|
| 2,3,7,8-tetrachlorinated dibenzo-p-dioxin | 1 |
| 1,2,3,7,8-pentachlorinated dibenzo-p-dioxin | 1 |
| 1,2,3,4,7,8-hexachlorinated dibenzo-p-dioxin | 0.1 |
| 1,2,3,7,8,9-hexachlorinated dibenzo-p-dioxin | 0.1 |
| 1,2,3,6,7,8-hexachlorinated dibenzo-p-dioxin | 0.1 |
| 1,2,3,4,6,7,8-heptachlorinated dibenzo-p-dioxin | 0.01 |
| octachlorinated dibenzo-p-dioxin | 0.0001 |
| 2,3,7,8-tetrachlorinated dibenzofuran | 0.1 |
| 2,3,4,7,8-pentachlorinated dibenzofuran | 0.5 |
| 1,2,3,7,8-pentachlorinated dibenzofuran | 0.05 |
| 1,2,3,4,7,8-hexachlorinated dibenzofuran | 0.1 |
| 1,2,3,6,7,8-hexachlorinated dibenzofuran | 0.1 |
| 1,2,3,7,8,9-hexachlorinated dibenzofuran | 0.1 |
| 2,3,4,6,7,8-hexachlorinated dibenzofuran | 0.1 |
| 1,2,3,4,6,7,8-heptachlorinated dibenzofuran | 0.01 |
| 1,2,3,4,7,8,9-heptachlorinated dibenzofuran | 0.01 |
| octachlorinated dibenzofuran | 0.0001 |

TABLE 3 TO SUBPART TTTTT OF PART 63—INITIAL COMPLIANCE WITH EMISSION LIMITS

As required in 63.9916, you must demonstrate initial compliance with the emission limits according to the following table:

| For . . . | You have demonstrated initial compliance if . . . |
|---|---|
| 1. Each spray dryer stack | a. The average mass flow of particulate matter from the control system applied to emissions from each spray dryer, measured according to the performance test procedures in §63.9913(c), did not exceed 100 lbs/hr; and<br>b. The average mass flow of hydrochloric acid from the control system applied to emissions from each spray dryer, determined according to the performance test procedures in §63.9914(c), did not exceed 200 lbs/hr. |

| For . . . | You have demonstrated initial compliance if . . . |
|---|---|
| 2. Each magnesium chloride storage bin scrubber stack. | a. The average mass flow of hydrochloric acid from the control system applied to the magnesium chloride storage bins scrubber exhaust, measured according to the performance test procedure in § 63.9914, did not exceed 47.5 lbs/hr and 0.35 gr/dscf; and<br>b. The average mass flow of $PM_{10}$ from the control system applied to the magnesium chloride storage bins scrubber exhaust, determined according to the performance test procedures in § 63.9913, did not exceed 2.7 lbs/hr and 0.016 gr/dscf. |
| 3. Each melt/reactor system stack ..... | a. The average mass flow of $PM_{10}$ from the control system applied to the melt/reactor system exhaust, measured according to the performance test procedures in § 63.9913, did not exceed 13.1 lbs/hr; and<br>b. The average mass flow of hydrochloric acid from the control system applied to the melt/reactor system exhaust, measured according to the performance test procedures in § 63.9914, did not exceed 7.2 lbs/hr; and<br>c. The average mass flow of chlorine from the control system applied to the melt/reactor system exhaust, measured according to the performance test procedures in § 63.9914, did not exceed 100 lbs/hr.<br>d. The average concentration of dioxins/furans from the control system applied to the melt/reactor system exhaust, measured according to the performance test procedures in § 63.9915, did not exceed 36 ng TEQ/dscm corrected to 7% oxygen. |
| 4. Each launder off-gas system stack ..... | a. The average mass flow of particulate matter from the control system applied to the launder off-gas system collection system exhaust, measured according to the performance test procedures in § 63.9913, did not exceed 37.5 lbs/hr; and<br>b. The average mass flow of hydrochloric acid from the control system applied to the launder off-gas system collection system exhaust, measured according to the performance test procedures in § 63.9914, did not exceed 46.0 lbs/hr; and<br>c. The average mass flow of chlorine from the control system applied to the launder off-gas system collection system exhaust, measured according to the performance test procedures in § 63.9914, did not exceed 26.0 lbs/hr. |

## TABLE 4 TO SUBPART TTTTT OF PART 63—CONTINUOUS COMPLIANCE WITH EMISSION LIMITS

As required in § 63.9923, you must demonstrate continuous compliance with the emission limits according to the following table:

| For . . . | You must demonstrate continuous compliance by . . . |
|---|---|
| 1. Each spray dryer stack ..... | a. Maintaining emissions of $PM_{10}$ at or below 100 lbs/hr; and<br>b. Maintaining emissions of hydrochloric acid at or below 200 lbs/hr; and<br>c. Conducting subsequent performance tests at least twice during each term of your title V operating permit (at mid-term and renewal). |
| 2. Magnesium chloride storage bins scrubber stack. | a. Maintaining emissions of hydrochloric acid at or below 47.5 lbs/hr and 0.35 gr/dscf; and<br>b. Maintaining emissions of $PM_{10}$ at or below 2.7 lbs/hr and 0.016 gr/dscf; and<br>c. Conducting subsequent performance tests at least twice during each term of your title V operating permit (at mid-term and renewal). |
| 3. Each melt/reactor system stack ..... | a. Maintaining emissions of $PM_{10}$ at or below 13.1 lbs/hr; and<br>b. Maintaining emissions of hydrochloric acid at or below 7.2 lbs/hr; and<br>c. Maintaining emissions of chlorine at or below 100 lbs/hr; and<br>d. Maintaining emissions of dioxins/furans at or below 36 ng TEQ/dscm corrected to 7% oxygen.<br>e. Conducting subsequent performance test at least twice during each term of your title V operating permit (at mid-term and renewal). |
| 4. Each launder off-gas system stack ..... | a. Maintaining emissions of particulate matter at or below 37.5 lbs/hr; and<br>b. Maintaining emissions of hydrochloric acid at or below 46.0 lbs/hr; and<br>c. Maintaining emissions of chlorine at or below 26.0 lbs/hr; and<br>d. Conducting subsequent performance tests at least twice during each term of your title V operating permit (at mid-term and renewal). |

## TABLE 5 TO SUBPART TTTTT OF PART 63—APPLICABILITY OF GENERAL PROVISIONS TO SUBPART TTTTT OF PART 63

As required in § 63.9950, you must comply with the requirements of the NESHAP General Provisions (40 CFR part 63, subpart A) shown in the following table:

| Citation | Subject | Applies to Subpart TTTTT | Explanation |
|---|---|---|---|
| 63.1 ..... | Applicability ..... | Yes. | |
| 63.2 ..... | Definitions ..... | Yes. | |

| Citation | Subject | Applies to Subpart TTTTT | Explanation |
|---|---|---|---|
| 63.3 | Units and Abbreviations | Yes. | |
| 63.4 | Prohibited Activities | Yes. | |
| 63.5 | Construction and Reconstruction | Yes. | |
| 63.6(a)–(g) | Compliance with Standards and Maintenance Requirements. | Yes. | |
| 63.6(h) | Determining Compliance with Opacity and Visible Emission Standards. | No. | |
| 63.6(i)–(j) | Extension of Compliance and Presidential Compliance Exemption. | Yes. | |
| 63.7(a)(1)–(2) | Applicability and Performance Test Dates. | No | Subpart TTTTT specifies performance test applicability and dates. |
| 63.7(a)(3), (b)–(h) | Performance Testing Requirements. | Yes. | |
| 63.8 except for (a)(4),(c)(4), and (f)(6). | Monitoring Requirements | Yes. | |
| 63.8(a)(4) | Additional Monitoring Requirements for Control Devices in § 63.11. | No | Subpart TTTTT does not require flares. |
| 63.8(c)(4) | Continuous Monitoring System Requirements. | No | Subpart TTTTT specifies requirements for operation of CMS. |
| 63.8(f)(6) | Relative Accuracy Test Alternative (RATA). | No | Subpart TTTTT does not require continuous emission monitoring systems. |
| 63.9 | Notification Requirements | Yes. | |
| 63.9(g)(5) | Data Reduction | No | Subpart TTTTT specifies data reduction requirements. |
| 63.10 except for (b)(2)(xiii) and (c)(7)–(8). | Recordkeeping and Reporting Requirements. | Yes. | |
| 63.10(b)(2)(xiii) | Continuous Monitoring System (CMS) Records for RATA Alternative. | No | Subpart TTTTT does not require continuous emission monitoring systems. |
| 63.10(c)(7)–(8) | Records of Excess Emissions and Parameter Monitoring Accedences for CMS. | No | Subpart TTTTT specifies recordkeeping requirements. |
| 63.11 | Control Device Requirements | No | Subpart TTTTT does not require flares. |
| 63.12 | State Authority and Delegations | Yes. | |
| 63.13–63.15 | Addresses, Incorporation by Reference, Availability of Information. | Yes. | |

## Subpart UUUUU—National Emission Standards for Hazardous Air Pollutants: Coal- and Oil-Fired Electric Utility Steam Generating Units

SOURCE: 77 FR 9464, Feb. 16, 2012, unless otherwise noted.

### WHAT THIS SUBPART COVERS

### § 63.9980 What is the purpose of this subpart?

This subpart establishes national emission limitations and work practice standards for hazardous air pollutants (HAP) emitted from coal- and oil-fired electric utility steam generating units (EGUs) as defined in § 63.10042 of this subpart. This subpart also establishes requirements to demonstrate initial and continuous compliance with the emission limitations.

### § 63.9981 Am I subject to this subpart?

You are subject to this subpart if you own or operate a coal-fired EGU or an oil-fired EGU as defined in § 63.10042 of this subpart.

### § 63.9982 What is the affected source of this subpart?

(a) This subpart applies to each individual or group of two or more new, reconstructed, or existing affected source(s) as described in paragraphs (a)(1) and (2) of this section within a contiguous area and under common control.

(1) The affected source of this subpart is the collection of all existing coal- or oil-fired EGUs, as defined in § 63.10042, within a subcategory.

(2) The affected source of this subpart is each new or reconstructed coal- or oil-fired EGU as defined in § 63.10042.

(b) An EGU is new if you commence construction of the coal- or oil-fired EGU after May 3, 2011.

(c) An EGU is reconstructed if you meet the reconstruction criteria as defined in § 63.2, and if you commence reconstruction after May 3, 2011.

(d) An EGU is existing if it is not new or reconstructed. An existing electric steam generating unit that meets the applicability requirements after April 16, 2012, due to a change in process (*e.g.*, fuel or utilization) is considered to be an existing source under this subpart.

[77 FR 9464, Feb. 16, 2012, as amended at 77 FR 23402, Apr. 19, 2012; 78 FR 24084, Apr. 24, 2013; 85 FR 20850, Apr. 15, 2020]

### § 63.9983 Are any fossil fuel-fired electric generating units not subject to this subpart?

The types of electric steam generating units listed in paragraphs (a) through (d) of this section are not subject to this subpart.

(a) Any unit designated as a major source stationary combustion turbine subject to subpart YYYY of this part and any unit designated as an area source stationary combustion turbine, other than an integrated gasification combined cycle (IGCC) unit.

(b) Any electric utility steam generating unit that is not a coal- or oil-fired EGU and that meets the definition of a natural gas-fired EGU in § 63.10042.

(c) Any electric utility steam generating unit that has the capability of combusting more than 25 MW of coal or oil but does not meet the definition of a coal- or oil-fired EGU because it did not fire sufficient coal or oil to satisfy the average annual heat input requirement set forth in the definitions for coal-fired and oil-fired EGUs in § 63.10042. Heat input means heat derived from combustion of fuel in an EGU and does not include the heat derived from preheated combustion air, recirculated flue gases or exhaust gases from other sources (such as stationary gas turbines, internal combustion engines, and industrial boilers).

(d) Any electric steam generating unit combusting solid waste is a solid waste incineration unit subject to standards established under sections 129 and 111 of the Clean Air Act.

(e) Any electric utility steam generating unit that meets the definition of a natural gas-fired EGU under this subpart and that fires at least 10 percent biomass is an industrial boiler subject to standards established under subpart DDDDD of this part, if it otherwise meets the applicability provisions in that rule.

[77 FR 9464, Feb. 16, 2012, as amended at 81 FR 20180, Apr. 6, 2016]

### § 63.9984 When do I have to comply with this subpart?

(a) If you have a new or reconstructed EGU, you must comply with this subpart by April 16, 2012 or upon startup of your EGU, whichever is later, and as further provided for in § 63.10005(g).

(b) If you have an existing EGU, you must comply with this subpart no later than April 16, 2015, except as provided in paragraph (g) of this section.

(c) You must meet the notification requirements in § 63.10030 according to the schedule in § 63.10030 and in subpart A of this part. Some of the notifications must be submitted before you are required to comply with the emission limits and work practice standards in this subpart.

(d) An electric steam generating unit that does not meet the definition of an EGU subject to this subpart on April 16, 2012 for new sources or April 16, 2015 for existing sources must comply with the applicable existing source provisions of this subpart on the date such unit meets the definition of an EGU subject to this subpart.

(e) If you own or operate an electric steam generating unit that is exempted from this subpart under § 63.9983(d), if the manner of operating the unit changes such that the combustion of waste is discontinued and the unit becomes a coal-fired or oil-fired EGU (as defined in § 63.10042), you must be in compliance with this subpart on April 16, 2015 or on the effective date of the

switch from waste combustion to coal or oil combustion, whichever is later.

(f) You must demonstrate that compliance has been achieved, by conducting the required performance tests and other activities, no later than 180 days after the applicable date in paragraph (a), (b), (c), (d), (e), or (g) of this section.

(g) If you own or operate an EGU that is in the *Unit designed for eastern bituminous coal refuse (EBCR) subcategory* as defined in § 63.10042, you must comply with the applicable hydrogen chloride (HCl) or sulfur dioxide ($SO_2$) requirements of this subpart no later than April 15, 2020.

[77 FR 9464, Feb. 16, 2012, as amended at 85 FR 20850, Apr. 15, 2020]

### § 63.9985 What is a new EGU?

(a) A new EGU is an EGU that meets any of the criteria specified in paragraph (a)(1) through (a)(2) of this section.

(1) An EGU that commenced construction after May 3, 2011.

(2) An EGU that commenced reconstruction after May 3, 2011.

(b) [Reserved]

[77 FR 9464, Feb. 16, 2012, as amended at 77 FR 23402, Apr. 19, 2012]

## EMISSION LIMITATIONS AND WORK PRACTICE STANDARDS

### § 63.9990 What are the subcategories of EGUs?

(a) Coal-fired EGUs are subcategorized as defined in paragraphs (a)(1) through (3) of this section and as defined in § 63.10042.

(1) EGUs designed for coal with a heating value greater than or equal to 8,300 Btu/lb,

(2) EGUs designed for low rank virgin coal, and

(3) EGUs designed for EBCR.

(b) Oil-fired EGUs are subcategorized as noted in paragraphs (b)(1) through (b)(4) of this section and as defined in § 63.10042.

(1) Continental liquid oil-fired EGUs

(2) Non-continental liquid oil-fired EGUs,

(3) Limited-use liquid oil-fired EGUs, and

(4) EGUs designed to burn solid oil-derived fuel.

(c) IGCC units combusting either gasified coal or gasified solid oil-derived fuel. For purposes of compliance, monitoring, recordkeeping, and reporting requirements in this subpart, IGCC units are subject in the same manner as coal-fired units and solid oil-derived fuel-fired units, unless otherwise indicated.

[77 FR 9464, Feb. 16, 2012, as amended at 85 FR 20850, Apr. 15, 2020]

### § 63.9991 What emission limitations, work practice standards, and operating limits must I meet?

(a) You must meet the requirements in paragraphs (a)(1) and (2) of this section. You must meet these requirements at all times.

(1) You must meet each emission limit and work practice standard in Table 1 through 3 to this subpart that applies to your EGU, for each EGU at your source, except as provided under § 63.10009.

(2) You must meet each operating limit in Table 4 to this subpart that applies to your EGU.

(b) As provided in § 63.6(g), the Administrator may approve use of an alternative to the work practice standards in this section.

(c) You may use the alternate $SO_2$ limit in Tables 1 and 2 to this subpart only if your EGU:

(1) Has a system using wet or dry flue gas desulfurization technology and an $SO_2$ continuous emissions monitoring system (CEMS) installed on the EGU; and

(2) At all times, you operate the wet or dry flue gas desulfurization technology and the $SO_2$ CEMS installed on the EGU consistent with § 63.10000(b).

[77 FR 9464, Feb. 16, 2012, as amended at 77 FR 23402, Apr. 19, 2012; 81 FR 20180, Apr. 6, 2016]

## GENERAL COMPLIANCE REQUIREMENTS

### § 63.10000 What are my general requirements for complying with this subpart?

(a) You must be in compliance with the emission limits and operating limits in this subpart. These limits apply to you at all times except during periods of startup and shutdown; however, for coal-fired, liquid oil-fired, or solid

oil-derived fuel-fired EGUs, you are required to meet the work practice requirements, items 3 and 4, in Table 3 to this subpart during periods of startup or shutdown.

(b) At all times you must operate and maintain any affected source, including associated air pollution control equipment and monitoring equipment, in a manner consistent with safety and good air pollution control practices for minimizing emissions. Determination of whether such operation and maintenance procedures are being used will be based on information available to the EPA Administrator which may include, but is not limited to, monitoring results, review of operation and maintenance procedures, review of operation and maintenance records, and inspection of the source.

(c)(1) For coal-fired units, IGCC units, and solid oil-derived fuel-fired units, initial performance testing is required for all pollutants, to demonstrate compliance with the applicable emission limits.

(i) For a coal-fired or solid oil-derived fuel-fired EGU or IGCC EGU, you may conduct initial performance testing in accordance with § 63.10005(h), to determine whether the EGU qualifies as a low emitting EGU (LEE) for one or more applicable emission limits, except as otherwise provided in paragraphs (c)(1)(i)(A) and (B) of this section:

(A) Except as provided in paragraph (c)(1)(i)(C) of this section, you may not pursue the LEE option if your coal-fired, IGCC, or solid oil-derived fuel-fired EGU is equipped with a main stack and a bypass stack or bypass duct configuration that allows the effluent to bypass any pollutant control device.

(B) You may not pursue the LEE option for Hg if your coal-fired, solid oil-derived fuel-fired EGU or IGCC EGU is new.

(C) You may pursue the LEE option provided that:

(*1*) Your EGU's control device bypass emissions are measured in the bypass stack or duct or your control device bypass exhaust is routed through the EGU main stack so that emissions are measured during the bypass event; or

(*2*) Except for hours during which only clean fuel is combusted, you bypass your EGU control device only during emergency periods for no more than a total of 2 percent of your EGU's annual operating hours; you use clean fuels to the maximum extent possible during an emergency period; and you prepare and submit a report describing the emergency event, its cause, corrective action taken, and estimates of emissions released during the emergency event. You must include these emergency emissions along with performance test results in assessing whether your EGU maintains LEE status.

(ii) For a qualifying LEE for Hg emissions limits, you must conduct a 30-day performance test using Method 30B at least once every 12 calendar months to demonstrate continued LEE status.

(iii) For a qualifying LEE of any other applicable emissions limits, you must conduct a performance test at least once every 36 calendar months to demonstrate continued LEE status.

(iv) If your coal-fired or solid oil derived fuel-fired EGU or IGCC EGU does not qualify as a LEE for total non-mercury HAP metals, individual non-mercury HAP metals, or filterable particulate matter (PM), you must demonstrate compliance through an initial performance test and you must monitor continuous performance through either use of a particulate matter continuous parametric monitoring system (PM CPMS), a PM CEMS, or, for an existing EGU, compliance performance testing repeated quarterly.

(v) If your coal-fired or solid oil-derived fuel-fired EGU does not qualify as a LEE for hydrogen chloride (HCl), you may demonstrate initial and continuous compliance through use of an HCl CEMS, installed and operated in accordance with Appendix B to this subpart. As an alternative to HCl CEMS, you may demonstrate initial and continuous compliance by conducting an initial and periodic quarterly performance stack test for HCl. If your EGU uses wet or dry flue gas desulfurization technology (this includes limestone injection into a fluidized bed combustion unit), you may apply a second alternative to HCl CEMS by installing and operating a sulfur dioxide ($SO_2$) CEMS installed and operated in accordance

with part 75 of this chapter to demonstrate compliance with the applicable $SO_2$ emissions limit.

(vi) If your coal-fired or solid oil-derived fuel-fired EGU does not qualify as a LEE for Hg, you must demonstrate initial and continuous compliance through use of a Hg CEMS or a sorbent trap monitoring system, in accordance with appendix A to this subpart.

(A) You may choose to use separate sorbent trap monitoring systems to comply with this subpart: One sorbent trap monitoring system to demonstrate compliance with the numeric mercury emissions limit during periods other than startup or shutdown and the other sorbent trap monitoring system to report average mercury concentration during startup periods or shutdown periods.

(B) You may choose to use one sorbent trap monitoring system to demonstrate compliance with the mercury emissions limit at all times (including startup periods and shutdown periods) and to report average mercury concentration. You must follow the startup or shutdown requirements that follow and as given in Table 3 to this subpart for each coal-fired, liquid oil-fired, or solid oil-derived fuel-fired EGU.

(2) For liquid oil-fired EGUs, except limited use liquid oil-fired EGUs, initial performance testing is required for all pollutants, to demonstrate compliance with the applicable emission limits.

(i) For an existing liquid oil-fired unit, you may conduct the performance testing in accordance with §63.10005(h), to determine whether the unit qualifies as a LEE for one or more pollutants. For a qualifying LEE for Hg emissions limits, you must conduct a 30-day performance test using Method 30B at least once every 12 calendar months to demonstrate continued LEE status. For a qualifying LEE of any other applicable emissions limits, you must conduct a performance test at least once every 36 calendar months to demonstrate continued LEE status.

(ii) If your liquid oil-fired unit does not qualify as a LEE for total HAP metals (including mercury), individual metals (including mercury), or filterable PM you must demonstrate compliance through an initial performance test and you must monitor continuous performance through either use of a PM CPMS, a PM CEMS, or, for an existing EGU, performance testing conducted quarterly.

(iii) If your existing liquid oil-fired unit does not qualify as a LEE for hydrogen chloride (HCl) or for hydrogen fluoride (HF), you may demonstrate initial and continuous compliance through use of an HCl CEMS, an HF CEMS, or an HCl and HF CEMS, installed and operated in accordance with Appendix B to this rule. As an alternative to HCl CEMS, HF CEMS, or HCl and HF CEMS, you may demonstrate initial and continuous compliance through quarterly performance testing and parametric monitoring for HCl and HF. If you choose to use quarterly testing and parametric monitoring, then you must also develop a site-specific monitoring plan that identifies the CMS you will use to ensure that the operations of the EGU remains consistent with those during the performance test. As another alternative, you may measure or obtain, and keep records of, fuel moisture content; as long as fuel moisture does not exceed 1.0 percent by weight, you need not conduct other HCl or HF monitoring or testing.

(iv) If your unit qualifies as a limited-use liquid oil-fired as defined in §63.10042, then you are not subject to the emission limits in Tables 1 and 2, but you must comply with the performance tune-up work practice requirements in Table 3.

(d)(1) If you demonstrate compliance with any applicable emissions limit through use of a continuous monitoring system (CMS), where a CMS includes a continuous parameter monitoring system (CPMS) as well as a continuous emissions monitoring system (CEMS), you must develop a site-specific monitoring plan and submit this site-specific monitoring plan, if requested, at least 60 days before your initial performance evaluation (where applicable) of your CMS. This requirement also applies to you if you petition the Administrator for alternative monitoring parameters under §63.8(f). This requirement to develop and submit a site-specific monitoring plan does not apply to affected sources with existing

monitoring plans that apply to CEMS and CPMS prepared under appendix B to part 60 or part 75 of this chapter, and that meet the requirements of § 63.10010. Using the process described in § 63.8(f)(4), you may request approval of monitoring system quality assurance and quality control procedures alternative to those specified in this paragraph of this section and, if approved, include those in your site-specific monitoring plan. The monitoring plan must address the provisions in paragraphs (d)(2) through (5) of this section.

(2) The site-specific monitoring plan shall include the information specified in paragraphs (d)(5)(i) through (d)(5)(vii) of this section. Alternatively, the requirements of paragraphs (d)(5)(i) through (d)(5)(vii) are considered to be met for a particular CMS or sorbent trap monitoring system if:

(i) The CMS or sorbent trap monitoring system is installed, certified, maintained, operated, and quality-assured either according to part 75 of this chapter, or appendix A or B to this subpart; and

(ii) The recordkeeping and reporting requirements of part 75 of this chapter, or appendix A or B to this subpart, that pertain to the CMS are met.

(3) If requested by the Administrator, you must submit the monitoring plan (or relevant portion of the plan) at least 60 days before the initial performance evaluation of a particular CMS, except where the CMS has already undergone a performance evaluation that meets the requirements of § 63.10010 (e.g., if the CMS was previously certified under another program).

(4) You must operate and maintain the CMS according to the site-specific monitoring plan.

(5) The provisions of the site-specific monitoring plan must address the following items:

(i) Installation of the CMS or sorbent trap monitoring system sampling probe or other interface at a measurement location relative to each affected process unit such that the measurement is representative of control of the exhaust emissions (e.g., on or downstream of the last control device). See § 63.10010(a) for further details. For PM CPMS installations, follow the procedures in § 63.10010(h).

(ii) Performance and equipment specifications for the sample interface, the pollutant concentration or parametric signal analyzer, and the data collection and reduction systems.

(iii) Schedule for conducting initial and periodic performance evaluations.

(iv) Performance evaluation procedures and acceptance criteria (e.g., calibrations), including the quality control program in accordance with the general requirements of § 63.8(d).

(v) On-going operation and maintenance procedures, in accordance with the general requirements of §§ 63.8(c)(1)(ii), (c)(3), and (c)(4)(ii).

(vi) Conditions that define a CMS that is out of control consistent with § 63.8(c)(7)(i) where appropriate, and for responding to out of control periods consistent with §§ 63.8(c)(7)(ii) and (c)(8).

(vii) On-going recordkeeping and reporting procedures, in accordance with the general requirements of §§ 63.10(c), (e)(1), and (e)(2)(i), or as specifically required under this subpart.

(e) As part of your demonstration of continuous compliance, you must perform periodic tune-ups of your EGU(s), according to § 63.10021(e).

(f) Except as provided under paragraph (n) of this section, you are subject to the requirements of this subpart for at least 6 months following the last date you met the definition of an EGU subject to this subpart (*e.g.*, 6 months after a cogeneration unit provided more than one third of its potential electrical output capacity and more than 25 megawatts electrical output to any power distributions system for sale). You may opt to remain subject to the provisions of this subpart beyond 6 months after the last date you met the definition of an EGU subject to this subpart, unless your unit is a solid waste incineration unit subject to standards under CAA section 129 (*e.g.*, 40 CFR part 60, subpart CCCC (New Source Performance Standards (NSPS) for Commercial and Industrial Solid Waste Incineration Units, or subpart DDDD (Emissions Guidelines (EG) for Existing Commercial and Industrial Solid Waste Incineration Units). Notwithstanding the provisions of this

subpart, an EGU that starts combusting solid waste is immediately subject to standards under CAA section 129 and the EGU remains subject to those standards until the EGU no longer meets the definition of a solid waste incineration unit consistent with the provisions of the applicable CAA section 129 standards.

(g) Except as provided under paragraph (n) of this section, if your unit no longer meets the definition of an EGU subject to this subpart you must be in compliance with any newly applicable standards on the date you are no longer subject to this subpart. The date you are no longer subject to this subpart is a date selected by you, that must be at least 6 months from the date that your unit last met the definition of an EGU subject to this subpart or the date you begin combusting solid waste, consistent with §63.9983(d). Your source must remain in compliance with this subpart until the date you select to cease complying with this subpart or the date you begin combusting solid waste, whichever is earlier.

(h)(1) If you own or operate an EGU that does not meet the definition of an EGU subject to this subpart on April 16, 2015, and you commence or recommence operations that cause you to meet the definition of an EGU subject to this subpart, you are subject to the provisions of this subpart, including, but not limited to, the emission limitations and the monitoring requirements, as of the first day you meet the definition of an EGU subject to this subpart. You must complete all initial compliance demonstrations for this subpart applicable to your EGU within 180 days after you commence or recommence operations that cause you to meet the definition of an EGU subject to this subpart.

(2) You must provide 30 days prior notice of the date you intend to commence or recommence operations that cause you to meet the definition of an EGU subject to this subpart. The notification must identify:

(i) The name of the owner or operator of the EGU, the location of the facility, the unit(s) that will commence or recommence operations that will cause the unit(s) to meet the definition of an EGU subject to this subpart, and the date of the notice;

(ii) The 40 CFR part 60, part 62, or part 63 subpart and subcategory currently applicable to your unit(s), and the subcategory of this subpart that will be applicable after you commence or recommence operation that will cause the unit(s) to meet the definition of an EGU subject to this subpart;

(iii) The date on which you became subject to the currently applicable emission limits;

(iv) The date upon which you will commence or recommence operations that will cause your unit to meet the definition of an EGU subject to this subpart, consistent with paragraph (f) of this section.

(i)(1) If you own or operate an EGU subject to this subpart and cease to operate in a manner that causes your unit to meet the definition of an EGU subject to this subpart, you must be in compliance with any newly applicable section 112 or 129 standards on the date you selected consistent with paragraphs (g) and (n) of this section.

(2) You must provide 30 days prior notice of the date your EGU will cease complying with this subpart. The notification must identify:

(i) The name of the owner or operator of the EGU(s), the location of the facility, the EGU(s) that will cease complying with this subpart, and the date of the notice;

(ii) The currently applicable subcategory under this subpart, and any 40 CFR part 60, part 62, or part 63 subpart and subcategory that will be applicable after you cease complying with this subpart;

(iii) The date on which you became subject to this subpart;

(iv) The date upon which you will cease complying with this subpart, consistent with paragraph (g) of this section.

(j) All air pollution control equipment necessary for compliance with any newly applicable emissions limits which apply as a result of the cessation or commencement or recommencement of operations that cause your EGU to meet the definition of an EGU subject to this subpart must be installed and operational as of the date your source

ceases to be or becomes subject to this subpart.

(k) All monitoring systems necessary for compliance with any newly applicable monitoring requirements which apply as a result of the cessation or commencement or recommencement of operations that cause your EGU to meet the definition of an EGU subject to this subpart must be installed and operational as of the date your source ceases to be or becomes subject to this subpart. All calibration and drift checks must be performed as of the date your source ceases to be or becomes subject to this subpart. You must also comply with provisions of §§ 63.10010, 63.10020, and 63.10021 of this subpart. Relative accuracy tests must be performed as of the performance test deadline for PM CEMS, if applicable. Relative accuracy testing for other CEMS need not be repeated if that testing was previously performed consistent with CAA section 112 monitoring requirements or monitoring requirements under this subpart.

(l) On or before the date an EGU is subject to this subpart, you must install, certify, operate, maintain, and quality assure each monitoring system necessary for demonstrating compliance with the work practice standards for PM or non-mercury HAP metals during startup periods and shutdown periods. You must collect, record, report, and maintain data obtained from these monitoring systems during startup periods and shutdown periods.

(m) Should you choose to rely on paragraph (2) of the definition of ''startup'' in § 63.10042 for your EGU, on or before the date your EGU is subject to this subpart, you must install, verify, operate, maintain, and quality assure each monitoring system necessary for demonstrating compliance with the work practice standards for PM or non-mercury HAP metals controls during startup periods and shutdown periods required to comply with § 63.10020(e).

(1) You may rely on monitoring system specifications or instructions or manufacturer's specifications when installing, verifying, operating, maintaining, and quality assuring each monitoring system.

(2) You must collect, record, report, and maintain data obtained from these monitoring systems during startup periods and shutdown periods.

(n) If you have permanently converted your EGU from coal or oil to natural gas or biomass after your compliance date (or, if applicable, after your approved extended compliance date), as demonstrated by being subject to a permit provision or physical limitation (including retirement) that prevents you from operating in a manner that would subject you to this subpart, you are no longer subject to this subpart, notwithstanding the coal or oil usage in the previous calendar years. The date on which you are no longer subject to this subpart is the date on which you converted to natural gas or biomass firing; it is also the date on which you must be in compliance with any newly applicable standards.

[77 FR 9464, Feb. 16, 2012, as amended at 77 FR 23402, Apr. 19, 2012; 78 FR 24084, Apr. 24, 2013; 79 FR 68788, Nov. 19, 2014; 81 FR 20180, Apr. 6, 2016; 85 FR 55757, Sept. 9, 2020]

### § 63.10001 [Reserved]

TESTING AND INITIAL COMPLIANCE REQUIREMENTS

### § 63.10005 What are my initial compliance requirements and by what date must I conduct them?

(a) *General requirements.* For each of your affected EGUs, you must demonstrate initial compliance with each applicable emissions limit in Table 1 or 2 of this subpart through performance testing. Where two emissions limits are specified for a particular pollutant (*e.g.*, a heat input-based limit in lb/MMBtu and a gross output-based limit in lb/MWh), you may demonstrate compliance with either emission limit. For a particular compliance demonstration, you may be required to conduct one or more of the following activities in conjunction with performance testing: collection of data, *e.g.*, hourly gross output data (megawatts); establishment of operating limits according to § 63.10011 and Tables 4 and 7 to this subpart; and CMS performance evaluations. In all cases, you must demonstrate initial compliance no later than the date in paragraph (f) of this section for tune-up work practices for

existing EGUs; the date that compliance must be demonstrated, as given in §63.9984 for other requirements for existing EGUs; and in paragraph (g) of this section for all requirements for new EGUs.

(1) To demonstrate initial compliance with an applicable emissions limit in Table 1 or 2 to this subpart using stack testing, the initial performance test generally consists of three runs at specified process operating conditions using approved methods. If you are required to establish operating limits (see paragraph (d) of this section and Table 4 to this subpart), you must collect all applicable parametric data during the performance test period. Also, if you choose to comply with an electrical output-based emission limit, you must collect hourly electrical load data during the test period.

(2) To demonstrate initial compliance using either a CMS that measures HAP concentrations directly (*i.e.*, an Hg, HCl, or HF CEMS, or a sorbent trap monitoring system) or an $SO_2$ or PM CEMS, the initial performance test shall consist of 30- or, if applicable for Hg, 90-boiler operating days.If the CMS is certified prior to the compliance date (or, if applicable, the approved extended compliance date), the test shall begin with the first operating day on or after that date, except as otherwise provided in paragraph (b) of this section. If the CMS is not certified prior to the compliance date, the test shall begin with the first operating day after certification testing is successfully completed. In all cases, the initial 30- or 90- operating day averaging period must be completed on or before the date that compliance must be demonstrated (*i.e.*, 180 days after the applicable compliance date).

(i) The CMS performance test must demonstrate compliance with the applicable Hg, HCl, HF, PM, or $SO_2$ emissions limit in Table 1 or 2 to this subpart.

(ii) You must collect hourly data from auxiliary monitoring systems (*i.e.*, stack gas flow rate, $CO_2$, $O_2$, or moisture, as applicable) during the performance test period, in order to convert the pollutant concentrations to units of the standard. If you choose to comply with a gross output-based emission limit, you must also collect hourly gross output data during the performance test period.

(iii) For a group of affected units that are in the same subcategory, are subject to the same emission standards, and share a common stack, if you elect to demonstrate compliance by monitoring emissions at the common stack, startup and shutdown emissions (if any) that occur during the 30-(or, if applicable, 90-) boiler operating day performance test must either be excluded from or included in the compliance demonstration as follows:

(A) If one of the units that shares the stack either starts up or shuts down at a time when none of the other units is operating, you must exclude all pollutant emission rates measured during the startup or shutdown period, unless you are using a sorbent trap monitoring system to measure Hg emissions and have elected to include startup and shutdown emissions in the compliance demonstrations;

(B) If all units that are currently operating are in the startup or shutdown mode, you must exclude all pollutant emission rates measured during the startup or shutdown period, unless you are using a sorbent trap monitoring system to measure Hg emissions and have elected to include startup and shutdown emissions in the compliance demonstrations; or

(C) If any unit starts up or shuts down at a time when another unit is operating, and the other unit is not in the startup or shutdown mode, you must include all pollutant emission rates measured during the startup or shutdown period in the compliance demonstrations.

(b) *Performance testing requirements.* If you choose to use performance testing to demonstrate initial compliance with the applicable emissions limits in Tables 1 and 2 to this subpart for your EGUs, you must conduct the tests according to 40 CFR 63.10007 and Table 5 to this subpart. Notwithstanding these requirements, when Table 5 specifies the use of isokinetic EPA test Method 5, 5D, 26A, or 29 for a stack test, if concurrent measurement of the stack gas flow rate or moisture content is needed to convert the pollutant concentrations to units of the standard, separate

determination of these parameters using EPA test Method 2 or EPA test Method 4 is not necessary. Instead, the stack gas flow rate and moisture content can be determined from data that are collected during the EPA test Method 5, 5D, 6, 26A, or 29 test (*e.g.*, pitot tube (delta P) readings, moisture collected in the impingers, etc.). For the purposes of the initial compliance demonstration, you may use test data and results from a performance test conducted prior to the date on which compliance is required as specified in 40 CFR 63.9984, provided that the following conditions are fully met:

(1) For a performance test based on stack test data, the test was conducted no more than 12 calendar months prior to the date on which compliance is required as specified in § 63.9984;

(2) For a performance test based on data from a certified CEMS or sorbent trap monitoring system, the test consists of all valid CMS data recorded in the 30 boiler operating days immediately preceding that date;

(3) The performance test was conducted in accordance with all applicable requirements in § 63.10007 and Table 5 to this subpart;

(4) A record of all parameters needed to convert pollutant concentrations to units of the emission standard (*e.g.*, stack flow rate, diluent gas concentrations, hourly gross outputs) is available for the entire performance test period; and

(5) For each performance test based on stack test data, you certify, and keep documentation demonstrating, that the EGU configuration, control devices, and fuel(s) have remained consistent with conditions since the prior performance test was conducted.

(6) For performance stack test data that are collected prior to the date that compliance must be demonstrated and are used to demonstrate initial compliance with applicable emissions limits, the interval for subsequent stack tests begins on the date that compliance must be demonstrated.

(c) *Operating limits*. In accordance with § 63.10010 and Table 4 to this subpart, you may be required to establish operating limits using PM CPMS and using site-specific monitoring for certain liquid oil-fired units as part of your initial compliance demonstration.

(d) *CMS requirements*. If, for a particular emission or operating limit, you are required to (or elect to) demonstrate initial compliance using a continuous monitoring system, the CMS must pass a performance evaluation prior to the initial compliance demonstration. If a CMS has been previously certified under another state or federal program and is continuing to meet the on-going quality-assurance (QA) requirements of that program, then, provided that the certification and QA provisions of that program meet the applicable requirements of §§ 63.10010(b) through (h), an additional performance evaluation of the CMS is not required under this subpart.

(1) For an affected coal-fired, solid oil-derived fuel-fired, or liquid oil-fired EGU, you may demonstrate initial compliance with the applicable $SO_2$, HCl, or HF emissions limit in Table 1 or 2 to this subpart through use of an $SO_2$, HCl, or HF CEMS installed and operated in accordance with part 75 of this chapter or appendix B to this subpart, as applicable. You may also demonstrate compliance with a filterable PM emission limit in Table 1 or 2 to this subpart through use of a PM CEMS installed, certified, and operated in accordance with § 63.10010(i). Initial compliance is achieved if the arithmetic average of 30-boiler operating days of quality-assured CEMS data, expressed in units of the standard (see § 63.10007(e)), meets the applicable $SO_2$, PM, HCl, or HF emissions limit in Table 1 or 2 to this subpart. Use Equation 19–19 of Method 19 in appendix A–7 to part 60 of this chapter to calculate the 30-boiler operating day average emissions rate. (NOTE: For this calculation, the term $E_{hj}$ in Equation 19–19 must be in the same units of measure as the applicable HCl or HF emission limit in Table 1 or 2 to this subpart).

(2) For affected coal-fired or solid oil-derived fuel-fired EGUs that demonstrate compliance with the applicable emission limits for total non-mercury HAP metals, individual non-mercury HAP metals, total HAP metals, individual HAP metals, or filterable PM listed in Table 1 or 2 to this subpart using initial performance testing

and continuous monitoring with PM CPMS:

(i) You must demonstrate initial compliance no later than the applicable date specified in §63.9984(f) for existing EGUs and in paragraph (g) of this section for new EGUs.

(ii) You must demonstrate continuous compliance with the PM CPMS site-specific operating limit that corresponds to the results of the performance test demonstrating compliance with the emission limit with which you choose to comply.

(iii) You must repeat the performance test annually for the selected pollutant emissions limit and reassess and adjust the site-specific operating limit in accordance with the results of the performance test.

(3) For affected EGUs that are either required to or elect to demonstrate initial compliance with the applicable Hg emission limit in Table 1 or 2 of this subpart using Hg CEMS or sorbent trap monitoring systems, initial compliance must be demonstrated no later than the applicable date specified in §63.9984(f) for existing EGUs and in paragraph (g) of this section for new EGUs. Initial compliance is achieved if the arithmetic average of 30- (or 90-) boiler operating days of quality-assured CEMS (or sorbent trap monitoring system) data, expressed in units of the standard (see section 6.2 of appendix A to this subpart), meets the applicable Hg emission limit in Table 1 or 2 to this subpart.

(4) For affected liquid oil-fired EGUs that demonstrate compliance with the applicable emission limits for HCl or HF listed in Table 1 or 2 to this subpart using quarterly testing and continuous monitoring with a CMS:

(i) You must demonstrate initial compliance no later than the applicable date specified in §63.9984(f) for existing EGUs and in paragraph (g) of this section for new EGUs.

(ii) You must demonstrate continuous compliance with the CMS site-specific operating limit that corresponds to the results of the performance test demonstrating compliance with the HCl or HF emissions limit.

(iii) You must repeat the performance test annually for the HCl or HF emissions limit and reassess and adjust the site-specific operating limit in accordance with the results of the performance test.

(e) *Tune-ups*. All affected EGUs are subject to the work practice standards in Table 3 of this subpart. As part of your initial compliance demonstration, you must conduct a performance tune-up of your EGU according to §63.10021(e).

(f) For an existing EGU without a neural network, a tune-up, following the procedures in §63.10021(e), must occur within 6 months (180 days) after April 16, 2015. For an existing EGU with a neural network, a tune-up must occur within 18 months (545 days) after April 16, 2016. If a tune-up occurs prior to April 16, 2015, you must keep records showing that the tune-up met all rule requirements.

(g) If your new or reconstructed affected source commenced construction or reconstruction between May 3, 2011, and July 2, 2011, you must demonstrate initial compliance with either the proposed emission limits or the promulgated emission limits no later than 180 days after April 16, 2012 or within 180 days after startup of the source, whichever is later, according to §63.7(a)(2)(ix).

(1) For the new or reconstructed affected source described in this paragraph (g), if you choose to comply with the proposed emission limits when demonstrating initial compliance, you must conduct a second compliance demonstration for the promulgated emission limits within 3 years after April 16, 2012 or within 3 years after startup of the affected source, whichever is later.

(2) If your new or reconstructed affected source commences construction or reconstruction after April 16, 2012, you must demonstrate initial compliance with the promulgated emission limits no later than 180 days after startup of the source.

(h) *Low emitting EGUs*. The provisions of this paragraph (h) apply to pollutants with emissions limits from new EGUs except Hg and to all pollutants with emissions limits from existing EGUs. You may pursue this compliance option unless prohibited pursuant to §63.10000(c)(1)(i).

(1) An EGU may qualify for low emitting EGU (LEE) status for Hg, HCl, HF, filterable PM, total non-Hg HAP metals, or individual non-Hg HAP metals (or total HAP metals or individual HAP metals, for liquid oil-fired EGUs) if you collect performance test data that meet the requirements of this paragraph (h), and if those data demonstrate:

(i) For all pollutants except Hg, performance test emissions results less than 50 percent of the applicable emissions limits in Table 1 or 2 to this subpart for all required testing for 3 consecutive years; or

(ii) For Hg emissions from an existing EGU, either:

(A) Average emissions less than 10 percent of the applicable Hg emissions limit in Table 2 to this subpart (expressed either in units of lb/TBtu or lb/GWh); or

(B) Potential Hg mass emissions of 29.0 or fewer pounds per year and compliance with the applicable Hg emission limit in Table 2 to this subpart (expressed either in units of lb/TBtu or lb/GWh).

(2) For all pollutants except Hg, you must conduct all required performance tests described in § 63.10007 to demonstrate that a unit qualifies for LEE status.

(i) When conducting emissions testing to demonstrate LEE status, you must increase the minimum sample volume specified in Table 1 or 2 nominally by a factor of two.

(ii) Follow the instructions in § 63.10007(e) and Table 5 to this subpart to convert the test data to the units of the applicable standard.

(3) For Hg, you must conduct a 30- (or 90-) boiler operating day performance test using Method 30B in appendix A–8 to part 60 of this chapter to determine whether a unit qualifies for LEE status. Locate the Method 30B sampling probe tip at a point within 10 percent of the duct area centered about the duct's centroid at a location that meets Method 1 in appendix A–1 to part 60 of this chapter and conduct at least three nominally equal length test runs over the 30- (or 90-) boiler operating day test period. You may use a pair of sorbent traps to sample the stack gas for a period consistent with that given in section 5.2.1 of appendix A to this subpart. Collect Hg emissions data continuously over the entire test period (except when changing sorbent traps or performing required reference method QA procedures). As an alternative to constant rate sampling per Method 30B, you may use proportional sampling per section 8.2.2 of Performance Specification 12 B in appendix B to part 60 of this chapter.

(i) Depending on whether you intend to assess LEE status for Hg in terms of the lb/TBtu or lb/GWh emission limit in Table 2 to this subpart or in terms of the annual Hg mass emissions limit of 29.0 lb/year, you will have to collect some or all of the following data during the 30-boiler operating day test period (see paragraph (h)(3)(iii) of this section):

(A) Diluent gas ($CO_2$ or $O_2$) data, using either Method 3A in appendix A–3 to part 60 of this chapter or a diluent gas monitor that has been certified according to part 75 of this chapter.

(B) Stack gas flow rate data, using either Method 2, 2F, or 2G in appendices A–1 and A–2 to part 60 of this chapter, or a flow rate monitor that has been certified according to part 75 of this chapter.

(C) Stack gas moisture content data, using either Method 4 in appendix A–1 to part 60 of this chapter, or a moisture monitoring system that has been certified according to part 75 of this chapter. Alternatively, an appropriate fuel-specific default moisture value from § 75.11(b) of this chapter may be used in the calculations or you may petition the Administrator under § 75.66 of this chapter for use of a default moisture value for non-coal-fired units.

(D) Hourly gross output data (megawatts), from facility records.

(ii) If you use CEMS to measure $CO_2$ (or $O_2$) concentration, and/or flow rate, and/or moisture, record hourly average values of each parameter throughout the 30-boiler operating day test period. If you opt to use EPA reference methods rather than CEMS for any parameter, you must perform at least one representative test run on each operating day of the test period, using the applicable reference method.

(iii) Calculate the average Hg concentration, in $\mu g/m^3$ (dry basis), for

each of LEE test runs comprising the 30- (or 90-) boiler operating day performance test, as the arithmetic average of all Method 30B sorbent trap results from the LEE test period. Also calculate, as applicable, the average values of $CO_2$ or $O_2$ concentration, stack gas flow rate, stack gas moisture content, and gross output for the LEE test period. Then:

(A) To express the test results in units of lb/TBtu, follow the procedures in §63.10007(e). Use the average Hg concentration and diluent gas values in the calculations.

(B) To express the test results in units of lb/GWh, use Equations A–3 and A–4 in section 6.2.2 of appendix A to this subpart, replacing the hourly values ''$C_h$'', ''$Q_h$'', ''$B_{ws}$'' and ''$(MW)_h$'' with the average values of these parameters from the performance test.

(C) To calculate pounds of Hg per year, use one of the following methods:

(*1*) Multiply the average lb/TBtu Hg emission rate (determined according to paragraph (h)(3)(iii)(A) of this section) by the maximum potential annual heat input to the unit (TBtu), which is equal to the maximum rated unit heat input (TBtu/hr) times 8,760 hours. If the maximum rated heat input value is expressed in units of MMBtu/hr, multiply it by $10^{-6}$ to convert it to TBtu/hr; or

(*2*) Multiply the average lb/GWh Hg emission rate (determined according to paragraph (h)(3)(iii)(B) of this section) by the maximum potential annual electricity generation (GWh), which is equal to the maximum rated electrical output of the unit (GW) times 8,760 hours. If the maximum rated electrical output value is expressed in units of MW, multiply it by $10^{-3}$ to convert it to GW; or

(*3*) If an EGU has a federally-enforceable permit limit on either the annual heat input or the number of annual operating hours, you may modify the calculations in paragraph (h)(3)(iii)(C)(1) of this section by replacing the maximum potential annual heat input or 8,760 unit operating hours with the permit limit on annual heat input or operating hours (as applicable).

(4) For a group of affected units that vent to a common stack, you may either assess LEE status for the units individually by performing a separate emission test of each unit in the duct leading from the unit to the common stack, or you may perform a single emission test in the common stack. If you choose the common stack testing option, the units in the configuration qualify for LEE status if:

(i) The emission rate measured at the common stack is less than 50 percent (10 percent for Hg) of the applicable emission limit in Table 1 or 2 to this subpart; or

(ii) For Hg from an existing EGU, the applicable Hg emission limit in Table 2 to this subpart is met and the potential annual mass emissions, calculated according to paragraph (h)(3)(iii) of this section (with some modifications), are less than or equal to 29.0 pounds times the number of units sharing the common stack. Base your calculations on the combined heat input capacity of all units sharing the stack (*i.e.*, either the combined maximum rated value or, if applicable, a lower combined value restricted by permit conditions or operating hours).

(5) For an affected unit with a multiple stack or duct configuration in which the exhaust stacks or ducts are downstream of all emission control devices, you must perform a separate emission test in each stack or duct. The unit qualifies for LEE status if:

(i) The emission rate, based on all test runs performed at all of the stacks or ducts, is less than 50 percent (10 percent for Hg) of the applicable emission limit in Table 1 or 2 to this subpart; or

(ii) For Hg from an existing EGU, the applicable Hg emission limit in Table 2 to this subpart is met and the potential annual mass emissions, calculated according to paragraph (h)(3)(iii) of this section, are less than or equal to 29.0 pounds. Use the average Hg emission rate from paragraph (h)(5)(i) of this section in your calculations.

(i) *Liquid-oil fuel moisture measurement*. If your EGU combusts liquid fuels, if your fuel moisture content is no greater than 1.0 percent by weight, and if you would like to demonstrate initial and ongoing compliance with HCl and HF emissions limits, you must meet the requirements of paragraphs (i)(1) through (5) of this section.

(1) Measure fuel moisture content of each shipment of fuel if your fuel arrives on a batch basis; or

(2) Measure fuel moisture content daily if your fuel arrives on a continuous basis; or

(3) Obtain and maintain a fuel moisture certification from your fuel supplier.

(4) Use one of the following methods to determine fuel moisture content:

(i) ASTM D95–05 (Reapproved 2010), ''Standard Test Method for Water in Petroleum Products and Bituminous Materials by Distillation,'' or

(ii) ASTM D4006–11, ''Standard Test Method for Water in Crude Oil by Distillation,'' including Annex A1 and Appendix A1.

(5) Use one of the following methods to obtain fuel moisture samples:

(i) ASTM D4177–95 (Reapproved 2010), ''Standard Practice for Automatic Sampling of Petroleum and Petroleum Products,'' including Annexes A1 through A6 and Appendices X1 and X2, or

(ii) ASTM D4057–06 (Reapproved 2011), ''Standard Practice for Manual Sampling of Petroleum and Petroleum Products,'' including Annex A1.

(6) Should the moisture in your liquid fuel be more than 1.0 percent by weight, you must

(i) Conduct HCl and HF emissions testing quarterly (and monitor site-specific operating parameters as provided in § 63.10000(c)(2)(iii) or

(ii) Use an HCl CEMS and/or HF CEMS.

(j) Startup and shutdown for coal-fired or solid oil derived-fired units. You must follow the requirements given in Table 3 to this subpart.

(k) You must submit a Notification of Compliance Status summarizing the results of your initial compliance demonstration, as provided in § 63.10030.

[77 FR 9464, Feb. 16, 2012, as amended at 77 FR 23403, Apr. 19, 2012; 78 FR 24084, Apr. 24, 2013; 79 FR 68789, Nov. 19, 2014; 81 FR 20181, Apr. 6, 2016; 85 FR 55757, Sept. 9, 2020]

### § 63.10006 When must I conduct subsequent performance tests or tune-ups?

(a) For liquid oil-fired, solid oil-derived fuel-fired and coal-fired EGUs and IGCC units using PM CPMS to monitor continuous performance with an applicable emission limit as provided for under § 63.10000(c), you must conduct all applicable performance tests according to Table 5 to this subpart and § 63.10007 at least every year.

(b) For affected units meeting the LEE requirements of § 63.10005(h), you must repeat the performance test once every 3 years (once every year for Hg) according to Table 5 and § 63.10007. Should subsequent emissions testing results show the unit does not meet the LEE eligibility requirements, LEE status is lost. If this should occur:

(1) For all pollutant emission limits except for Hg, you must conduct emissions testing quarterly, except as otherwise provided in § 63.10021(d)(1).

(2) For Hg, you must install, certify, maintain, and operate a Hg CEMS or a sorbent trap monitoring system in accordance with appendix A to this subpart, within 6 calendar months of losing LEE eligibility. Until the Hg CEMS or sorbent trap monitoring system is installed, certified, and operating, you must conduct Hg emissions testing quarterly, except as otherwise provided in § 63.10021(d)(1). You must have 3 calendar years of testing and CEMS or sorbent trap monitoring system data that satisfy the LEE emissions criteria to reestablish LEE status.

(c) Except where paragraphs (a) or (b) of this section apply, or where you install, certify, and operate a PM CEMS to demonstrate compliance with a filterable PM emissions limit, for liquid oil-, solid oil-derived fuel-, coal-fired and IGCC EGUs, you must conduct all applicable periodic emissions tests for filterable PM, individual, or total HAP metals emissions according to Table 5 to this subpart, § 63.10007, and § 63.10000(c), except as otherwise provided in § 63.10021(d)(1).

(d) Except where paragraph (b) of this section applies, for solid oil-derived fuel- and coal-fired EGUs that do not use either an HCl CEMS to monitor compliance with the HCl limit or an $SO_2$ CEMS to monitor compliance with the alternate equivalent $SO_2$ emission limit, you must conduct all applicable periodic HCl emissions tests according to Table 5 to this subpart and § 63.10007 at least quarterly, except as otherwise provided in § 63.10021(d)(1).

(e) Except where paragraph (b) of this section applies, for liquid oil-fired EGUs without HCl CEMS, HF CEMS, or HCl and HF CEMS, you must conduct all applicable emissions tests for HCl, HF, or HCl and HF emissions according to Table 5 to this subpart and §63.10007 at least quarterly, except as otherwise provided in §63.10021(d)(1), and conduct site-specific monitoring under a plan as provided for in §63.10000(c)(2)(iii).

(f) *Time between performance tests.* (1) Notwithstanding the provisions of §63.10021(d)(1), the requirements listed in paragraphs (g) and (h) of this section, and the requirements of paragraph (f)(3) of this section, you must complete performance tests for your EGU as follows:

(i) At least 45 calendar days, measured from the test's end date, must separate performance tests conducted every quarter;

(ii) For annual testing:

(A) At least 320 calendar days, measured from the test's end date, must separate performance tests;

(B) At least 320 calendar days, measured from the test's end date, must separate annual sorbent trap mercury testing for 30-boiler operating day LEE tests;

(C) At least 230 calendar days, measured from the test's end date, must separate annual sorbent trap mercury testing for 90-boiler operating day LEE tests; and

(iii) At least 1,050 calendar days, measured from the test's end date, must separate performance tests conducted every 3 years.

(2) For units demonstrating compliance through quarterly emission testing, you must conduct a performance test in the 4th quarter of a calendar year if your EGU has skipped performance tests in the first 3 quarters of the calendar year.

(3) If your EGU misses a performance test deadline due to being inoperative and if 168 or more boiler operating hours occur in the next test period, you must complete an additional performance test in that period as follows:

(i) At least 15 calendar days must separate two performance tests conducted in the same quarter.

(ii) At least 107 calendar days must separate two performance tests conducted in the same calendar year.

(iii) At least 350 calendar days must separate two performance tests conducted in the same 3 year period.

(g) If you elect to demonstrate compliance using emissions averaging under §63.10009, you must continue to conduct performance stack tests at the appropriate frequency given in section (c) through (f) of this section.

(h) If a performance test on a nonmercury LEE shows emissions in excess of 50 percent of the emission limit and if you choose to reapply for LEE status, you must conduct performance tests at the appropriate frequency given in section (c) through (e) of this section for that pollutant until all performance tests over a consecutive 3-year period show compliance with the LEE criteria.

(i) If you are required to meet an applicable tune-up work practice standard, you must conduct a performance tune-up according to §63.10021(e).

(1) For EGUs not employing neural network combustion optimization during normal operation, each performance tune-up specified in §63.10021(e) must be no more than 36 calendar months after the previous performance tune-up.

(2) For EGUs employing neural network combustion optimization systems during normal operation, each performance tune-up specified in §63.10021(e) must be no more than 48 calendar months after the previous performance tune-up.

[77 FR 9464, Feb. 16, 2012, as amended at 77 FR 23403, Apr. 19, 2012; 78 FR 24085, Apr. 24, 2013; 81 FR 20182, Apr. 6, 2016]

### §63.10007 What methods and other procedures must I use for the performance tests?

(a) Except as otherwise provided in this section, you must conduct all required performance tests according to §63.7(d), (e), (f), and (h). You must also develop a site-specific test plan according to the requirements in §63.7(c).

(1) If you use CEMS (Hg, HCl, $SO_2$, or other) to determine compliance with a 30- (or, if applicable, 90-) boiler operating day rolling average emission

limit, you must collect quality- assured CEMS data for all unit operating conditions, including startup and shutdown (see § 63.10011(g) and Table 3 to this subpart), except as otherwise provided in § 63.10020(b). Emission rates determined during startup periods and shutdown periods (as defined in § 63.10042) are not to be included in the compliance determinations, except as otherwise provided in §§ 63.10000(c)(1)(vi)(B) and 63.10005(a)(2)(iii).

(2) If you conduct performance testing with test methods in lieu of continuous monitoring, operate the unit at maximum normal operating load conditions during each periodic (e.g., quarterly) performance test. Maximum normal operating load will be generally between 90 and 110 percent of design capacity but should be representative of site specific normal operations during each test run.

(3) For establishing operating limits with particulate matter continuous parametric monitoring system (PM CPMS) to demonstrate compliance with a PM or non Hg metals emissions limit, operate the unit at maximum normal operating load conditions during the performance test period. Maximum normal operating load will be generally between 90 and 110 percent of design capacity but should be representative of site specific normal operations during each test run.

(b) You must conduct each performance test (including traditional 3-run stack tests, 30-boiler operating day tests based on CEMS data (or sorbent trap monitoring system data), and 30-boiler operating day Hg emission tests for LEE qualification) according to the requirements in Table 5 to this subpart.

(c) If you choose the filterable PM method to comply with the PM emission limit and demonstrate continuous performance using a PM CPMS as provided for in § 63.10000(c), you must also establish an operating limit according to § 63.10011(b), § 63.10023, and Tables 4 and 6 to this subpart. Should you desire to have operating limits that correspond to loads other than maximum normal operating load, you must conduct testing at those other loads to determine the additional operating limits.

(d) Except for a 30-boiler operating day performance test based on CEMS (or sorbent trap monitoring system) data, where the concept of test runs does not apply, you must conduct a minimum of three separate test runs for each performance test, as specified in § 63.7(e)(3). Each test run must comply with the minimum applicable sampling time or volume specified in Table 1 or 2 to this subpart. Sections 63.10005(d) and (h), respectively, provide special instructions for conducting performance tests based on CEMS or sorbent trap monitoring systems, and for conducting emission tests for LEE qualification.

(e) To use the results of performance testing to determine compliance with the applicable emission limits in Table 1 or 2 to this subpart, proceed as follows:

(1) Except for a 30-boiler operating day performance test based on CEMS (or sorbent trap monitoring system) data, if measurement results for any pollutant are reported as below the method detection level (e.g., laboratory analytical results for one or more sample components are below the method defined analytical detection level), you must use the method detection level as the measured emissions level for that pollutant in calculating compliance. The measured result for a multiple component analysis (e.g., analytical values for multiple Method 29 fractions both for individual HAP metals and for total HAP metals) may include a combination of method detection level data and analytical data reported above the method detection level.

(2) If the limits are expressed in lb/MMBtu or lb/TBtu, you must use the F-factor methodology and equations in sections 12.2 and 12.3 of EPA Method 19 in appendix A–7 to part 60 of this chapter. In cases where an appropriate F-factor is not listed in Table 19–2 of Method 19, you may use F-factors from Table 1 in section 3.3.5 of appendix F to part 75 of this chapter, or F-factors derived using the procedures in section 3.3.6 of appendix to part 75 of this chapter. Use the following factors to convert the pollutant concentrations

measured during the initial performance tests to units of lb/scf, for use in the applicable Method 19 equations:

(i) Multiply $SO_2$ ppm by $1.66 \times 10^{-7}$;

(ii) Multiply HCl ppm by $9.43 \times 10^{-8}$;

(iii) Multiply HF ppm by $5.18 \times 10^{-8}$;

(iv) Multiply HAP metals concentrations (mg/dscm) by $6.24 \times 10^{-8}$; and

(v) Multiply Hg concentrations (μg/scm) by $6.24 \times 10^{-11}$.

(3) To determine compliance with emission limits expressed in lb/MWh or lb/GWh, you must first calculate the pollutant mass emission rate during the performance test, in units of lb/h. For Hg, if a CEMS or sorbent trap monitoring system is used, use Equation A–2 or A–3 in appendix A to this subpart (as applicable). In all other cases, use an equation that has the general form of Equation A–2 or A–3, replacing the value of K with $1.66 \times 10^{-7}$ lb/scf-ppm for $SO_2$, $9.43 \times 10^{-8}$ lb/scf-ppm for HCl (if an HCl CEMS is used), $5.18 \times 10^{-8}$ lb/scf-ppm for HF (if an HF CEMS is used), or $6.24 \times 10^{-8}$ lb-scm/mg-scf for HAP metals and for HCl and HF (when performance stack testing is used), and defining $C_h$ as the average $SO_2$, HCl, or HF concentration in ppm, or the average HAP metals concentration in mg/dscm. This calculation requires stack gas volumetric flow rate (scfh) and (in some cases) moisture content data (see §§63.10005(h)(3) and 63.10010). Then, if the applicable emission limit is in units of lb/GWh, use Equation A–4 in appendix A to this subpart to calculate the pollutant emission rate in lb/GWh. In this calculation, define $(M)_h$ as the calculated pollutant mass emission rate for the performance test (lb/h), and define $(MW)_h$ as the average electrical load during the performance test (megawatts). If the applicable emission limit is in lb/MWh rather than lb/GWh, omit the $10^3$ term from Equation A–4 to determine the pollutant emission rate in lb/MWh.

(f) If you elect to (or are required to) use CEMS to continuously monitor Hg, HCl, HF, $SO_2$, or PM emissions (or, if applicable, sorbent trap monitoring systems to continuously collect Hg emissions data), the following default values are available for use in the emission rate calculations during startup periods or shutdown periods (as defined in §63.10042). For the purposes of this subpart, these default values are not considered to be substitute data.

(1) *Diluent cap values.* If you use CEMS (or, if applicable, sorbent trap monitoring systems) to comply with a heat input-based emission rate limit, you may use the following diluent cap values for a startup or shutdown hour in which the measured $CO_2$ concentration is below the cap value or the measured $O_2$ concentration is above the cap value:

(i) For an IGCC EGU, you may use 1% for $CO_2$ or 19% for $O_2$.

(ii) For all other EGUs, you may use 5% for $CO_2$ or 14% for $O_2$.

(2) *Default gross output.* If you use CEMS to continuously monitor Hg, HCl, HF, $SO_2$, or PM emissions (or, if applicable, sorbent trap monitoring systems to continuously collect Hg emissions data), the following default value is available for use in the emission rate calculations during startup periods or shutdown periods (as defined in §63.10042). For the purposes of this subpart, this default value is not considered to be substitute data. For a startup or shutdown hour in which there is heat input to an affected EGU but zero gross output, you must calculate the pollutant emission rate using a value equivalent to 5% of the maximum sustainable gross output, expressed in megawatts, as defined in section 6.5.2.1(a)(1) of appendix A to part 75 of this chapter. This default gross output is either the nameplate capacity of the EGU or the highest gross output observed in at least four representative quarters of EGU operation. For a monitored common stack, the default gross output is used only when all EGUs are operating (*i.e.*, combusting fuel) are in startup or shutdown mode, and have zero electrical generation. Under those conditions, a default gross output equal to 5% of the combined maximum sustainable gross output of the EGUs that are operating but have a total of zero gross output must be used to calculate the hourly gross output-based pollutant emissions rate.

(g) Upon request, you shall make available to the EPA Administrator such records as may be necessary to determine whether the performance tests

have been done according to the requirements of this section.

[77 FR 9464, Feb. 16, 2012, as amended at 77 FR 23403, Apr. 19, 2012; 78 FR 24085, Apr. 24, 2013; 79 FR 68789, Nov. 19, 2014; 81 FR 20182, Apr. 6, 2016]

### § 63.10008 [Reserved]

### § 63.10009 May I use emissions averaging to comply with this subpart?

(a) *General eligibility*. (1) You may use emissions averaging as described in paragraph (a)(2) of this section as an alternative to meeting the requirements of § 63.9991 for filterable PM, $SO_2$, HF, HCl, non-Hg HAP metals, or Hg on an EGU-specific basis if:

(i) You have more than one existing EGU in the same subcategory located at one or more contiguous properties, belonging to a single major industrial grouping, which are under common control of the same person (or persons under common control); and

(ii) You use CEMS (or sorbent trap monitoring systems for determining Hg emissions) or quarterly emissions testing for demonstrating compliance.

(2) You may demonstrate compliance by emissions averaging among the existing EGUs in the same subcategory, if your averaged Hg emissions for EGUs in the ''unit designed for coal ≥8,300 Btu/lb'' subcategory are equal to or less than 1.2 lb/TBtu or 1.3E–2 lb/GWh on a 30-boiler operating day basis or if your averaged emissions of individual, other pollutants from other subcategories of such EGUs are equal to or less than the applicable emissions limit in Table 2 to this subpart, according to the procedures in this section. Note that except for the alternate Hg emissions limit from EGUs in the ''unit designed for coal ≥ 8,300 Btu/lb'' subcategory, the averaging time for emissions averaging for pollutants is 30-group boiler operating days (rolling daily) using data from CEMS and sorbent trap monitoring (for Hg), or a combination of data from CEMS and emissions testing (for other pollutants). The averaging time for emissions averaging for the alternate Hg limit (equal to or less than 1.0 lb/TBtu or 1.1E–2 lb/GWh) from EGUs in the ''unit designed for coal ≥ 8,300 Btu/lb'' subcategory is 90-group boiler operating days (rolling daily) using data from CEMS, sorbent trap monitoring, or a combination of data from CEMS and sorbent trap monitoring. For the purposes of this paragraph, 30- (or 90-) group boiler operating days is defined as a period during which at least one unit in the emissions averaging group operates on each of the 30 or 90 days. You must calculate the weighted average emissions rate for the group in accordance with the procedures in this paragraph using the data from all units in the group including any that operate fewer than 30 (or 90) of the preceding 30- (or 90-) group boiler operating days.

(i) You may choose to have your EGU emissions averaging group meet either the heat input basis (MMBtu or TBtu, as appropriate for the pollutant) or gross output basis (MWh or GWh, as appropriate for the pollutant).

(ii) You may not mix bases within your EGU emissions averaging group.

(iii) You may use emissions averaging for affected units in different subcategories if the units vent to the atmosphere through a common stack (see paragraph (m) of this section).

(b) *Equations*. Use the following equations when performing calculations for your EGU emissions averaging group:

(1) *Group eligibility equations*.

$$WAER_m = \frac{\left[\sum_{j=1}^{p} Herm_j \times Rmm_j\right] + \sum_{k=1}^{m} Ter_k \times Rmt_k}{\left(\sum_{j=1}^{p} Rmm_j\right) + \sum_{k=1}^{m} Rmt_k} \qquad (Eq.1a)$$

Where:

$WAER_m$ = Maximum Weighted Average Emission Rate in terms of lb/heat input or lb/gross output,

$Herm_{i,j}$ = hourly emission rate (*e.g.*, lb/MMBtu, lb/MWh) from CEMS or sorbent trap monitoring as determined during the

initial compliance determination from EGU j,

$Rmm_j$ = Maximum rated heat input, MMBtu/h, or maximum rated gross output, MWh/h, for EGU j,

p = number of EGUs in emissions averaging group that rely on CEMS,

$Ter_k$ = Emissions rate (lb/MMBTU or lb/MWh) as determined during the initial compliance determination of EGU k,

$Rmt_k$ = Maximum rated heat input, MMBtu/h, or maximum rated gross output, MWh/h, for EGU k, and

m = number of EGUs in emissions averaging group that rely on emissions testing.

$$WAER_m = \frac{\sum \left[\left(\sum_{j=1}^{p} Herm_{i,j}\right) \times Smm_j \times Cfm_{j_j}\right] + \sum_{k=1}^{m} Ter_k \times Smt_k \times Cft_k}{\sum \left[\sum_{j=1}^{p} Smm_j \times Cfm_j\right] + \sum_{k=1}^{m} Smt_k \times Cft_k} \quad (Eq.\ 1b)$$

Where:

Variables with the similar names share the descriptions for Equation 1a of this section,

$Smm_j$ = maximum steam generation, $lb_{steam}$/h or lb/gross output, for EGU j,

$Cfm_j$ = conversion factor, calculated from the most recent compliance test results, in terms units of heat output or gross output per pound of steam generated (MMBtu/$lb_{steam}$ or MWh/$lb_{steam}$) from EGU j,

$Smt_k$ = maximum steam generation, $lb_{steam}$/h or lb/gross output, for EGU k, and

$Cfm_k$ = conversion factor, calculated from the most recent compliance test results, in terms units of heat output or gross output per pound of steam generated (MMBtu/$lb_{steam}$ or MWh/$lb_{steam}$) from EGU k.

(2) Weighted 30-boiler operating day rolling average emissions rate equations. Use Equation 2a or 2b of this section to calculate the 30 day rolling average emissions daily.

$$WAER = \frac{\sum_{i=1}^{p}\left[\sum_{i=1}^{n}(Her_i \times Rm_i)\right]_p + \sum_{i=1}^{m}(Ter_i \times Rt_i)}{\sum_{i=1}^{p}\left[\sum_{i=1}^{n}(Rm_i)\right]_p + \sum_{i=1}^{m} Rt_i} \quad (Eq.\ 2a)$$

Where:

$Her_i$ = hourly emission rate (*e.g.*, lb/MMBtu, lb/MWh) from unit i's CEMS or sorbent trap monitoring system for the preceding 30-group boiler operating days,

$Rm_i$ = hourly heat input or gross output from unit i for the preceding 30-group boiler operating days,

p = number of EGUs in emissions averaging group that rely on CEMS or sorbent trap monitoring,

n = number of hours that hourly rates are collected over 30-group boiler operating days,

$Ter_i$ = Emissions rate from most recent emissions test of unit i in terms of lb/heat input or lb/gross output,

$Rt_i$ = Total heat input or gross output of unit i for the preceding 30-boiler operating days, and

m = number of EGUs in emissions averaging group that rely on emissions testing.

$$WAER = \frac{\sum_{i=1}^{p}\left[\sum_{i=1}^{n}(Her_i \times Sm_i \times Cfm_i)\right]_p + \sum_{i=1}^{m}(Ter_i \times St_i \times Cft_i)}{\sum_{i=1}^{p}\left[\sum_{i=1}^{n}(Sm_i \times Cfm_i)\right]_p + \sum_{i=1}^{m} St_i \times Cft_i} \quad (Eq.\ 2b)$$

Where:

variables with similar names share the descriptions for Equation 2a of this section,

$Sm_i$ = steam generation in units of pounds from unit i that uses CEMS for the preceding 30-group boiler operating days,

$Cfm_i$ = conversion factor, calculated from the most recent compliance test results, in units of heat input per pound of steam generated or gross output per pound of steam generated, from unit i that uses CEMS from the preceding 30 group boiler operating days,

$St_i$ = steam generation in units of pounds from unit i that uses emissions testing, and

$Cft_i$ = conversion factor, calculated from the most recent compliance test results, in units of heat input per pound of steam generated or gross output per pound of steam generated, from unit i that uses emissions testing.

(3) Weighted 90-boiler operating day rolling average emissions rate equations for Hg emissions from EGUs in the ''coal-fired unit not low rank virgin coal'' subcategory. Use Equation 3a or 3b of this section to calculate the 90-day rolling average emissions daily.

$$WAER = \frac{\sum_{i=1}^{p}\left[\sum_{i=1}^{n}\left(Her_i \ x \ Rm_i\right)\right]_p}{\sum_{i=1}^{p}\left[\sum_{i=1}^{n}\left(Rm_i\right)\right]_p} \qquad \text{(Eq. 3a)}$$

Where:

$Her_i$ = Hourly emission rate from unit i's Hg CEMS or Hg sorbent trap monitoring system for the preceding 90-group boiler operating days,

$Rm_i$ = Hourly heat input or gross output from unit i for the preceding 90-group boiler operating days,

p = Number of EGUs in the emissions averaging group,

n = Number of hours that hourly rates are collected over the 90-group boiler operating days.

$$WAER = \frac{\sum_{i=1}^{p}\left[\sum_{i=1}^{n}\left(Her_i \ x \ Sm_i \ x \ Cfm_i\right)\right]_p}{\sum_{i=1}^{p}\left[\sum_{i=1}^{n}\left(Sm_i \ x \ Cfm_i\right)\right]_p} \qquad \text{(Eq. 3b)}$$

Where:

$Her_i$ = Hourly emission rate from unit i's Hg CEMS or Hg sorbent trap monitoring system for the preceding 90-group boiler operating days,

$Sm_i$ = Steam generation in units of pounds from unit i that uses Hg CEMS or Hg sorbent trap monitoring for the preceding 90-group boiler operating days,

$Cfm_i$ = Conversion factor, calculated from the most recent compliance test results, in units of heat input per pound of steam generated or gross output per pound of steam generated, from unit i that uses Hg CEMS or sorbent trap monitoring from the preceding 90-group boiler operating days,

p = Number of EGUs in the emissions averaging group,

n = Number of hours that hourly rates are collected over the 90-group boiler operating days.

(c) *Separate stack requirements.* For a group of two or more existing EGUs in the same subcategory that each vent to a separate stack, you may average filterable PM, $SO_2$, HF, HCl, non-Hg HAP metals, or Hg emissions to demonstrate compliance with the limits in Table 2 to this subpart if you satisfy the requirements in paragraphs (d) through (j) of this section.

(d) For each existing EGU in the averaging group:

(1) The emissions rate achieved during the initial performance test for the HAP being averaged must not exceed the emissions level that was being achieved 180 days after April 16, 2015, or the date on which emissions testing

done to support your emissions averaging plan is complete (if the Administrator does not require submission and approval of your emissions averaging plan), or the date that you begin emissions averaging, whichever is earlier; or

(2) The control technology employed during the initial performance test must not be less than the design efficiency of the emissions control technology employed 180 days after April 16, 2015 or the date that you begin emissions averaging, whichever is earlier.

(e) The weighted-average emissions rate from the existing EGUs participating in the emissions averaging option must be in compliance with the limits in Table 2 to this subpart at all times following the date that you begin emissions averaging.

(f) Emissions averaging group eligibility demonstration. You must demonstrate the ability for the EGUs included in the emissions averaging group to demonstrate initial compliance according to paragraph (f)(1) or (2) of this section using the maximum rated heat input or gross output over a 30- (or 90-) boiler operating day period of each EGU and the results of the initial performance tests. For this demonstration and prior to preparing your emissions averaging plan, you must conduct required emissions monitoring for 30- (or 90-) days of boiler operation and any required manual performance testing to calculate maximum weighted average emissions rate in accordance with this section. If, before the start of your initial compliance demonstration, the Administrator becomes aware that you intend to use emissions averaging for that demonstration, or if your initial Notification of Compliance Status (NOCS) indicates that you intend to implement emissions averaging at a future date, the Administrator may require you to submit your proposed emissions averaging plan and supporting data for approval. If the Administrator requires approval of your plan, you may not begin using emissions averaging until the Administrator approves your plan.

(1) You must use Equation 1a in paragraph (b) of this section to demonstrate that the maximum weighted average emissions rates of filterable PM, HF, $SO_2$, HCl, non-Hg HAP metals, or Hg emissions from the existing units participating in the emissions averaging option do not exceed the emissions limits in Table 2 to this subpart.

(2) If you are not capable of monitoring heat input or gross output, and the EGU generates steam for purposes other than generating electricity, you may use Equation 1b of paragraph (b) of this section as an alternative to using Equation 1a of paragraph (b) of this section to demonstrate that the maximum weighted average emissions rates of filterable PM, HF, $SO_2$, HCl, non-Hg HAP metals, or Hg emissions from the existing units participating in the emissions averaging group do not exceed the emission limits in Table 2 to this subpart.

(g) You must determine the weighted average emissions rate in units of the applicable emissions limit on a 30 group boiler operating day rolling average basis (or, if applicable, on a 90 group boiler operating day rolling average basis for Hg) according to paragraphs (g)(1) and (2) of this section. The first averaging period ends on the 30th (or, if applicable, 90th for the alternate Hg emission limit) group boiler operating day after the date that you begin emissions averaging.

(1) You must use Equation 2a or 3a of paragraph (b) of this section to calculate the weighted average emissions rate using the actual heat input or gross output for each existing unit participating in the emissions averaging option.

(2) If you are not capable of monitoring heat input or gross output, you may use Equation 2b or 3b of paragraph (b) of this section as an alternative to using Equation 2a of paragraph (b) of this section to calculate the average weighted emission rate using the actual steam generation from the units participating in the emissions averaging option.

(h) *CEMS (or sorbent trap monitoring) use.* If an EGU in your emissions averaging group uses CEMS (or a sorbent trap monitor for Hg emissions) to demonstrate compliance, you must use those data to determine the 30 (or 90) group boiler operating day rolling average emissions rate.

(i) *Emissions testing*. If you use manual emissions testing to demonstrate compliance for one or more EGUs in your emissions averaging group, you must use the results from the most recent performance test to determine the 30 (or 90) day rolling average. You may use CEMS or sorbent trap data in combination with data from the most recent manual performance test in calculating the 30 (or 90) group boiler operating day rolling average emissions rate.

(j) *Emissions averaging plan*. You must develop an implementation plan for emissions averaging according to the following procedures and requirements in paragraphs (j)(1) and (2) of this section.

(1) You must include the information contained in paragraphs (j)(1)(i) through (v) of this section in your implementation plan for all the emissions units included in an emissions averaging:

(i) The identification of all existing EGUs in the emissions averaging group, including for each either the applicable HAP emission level or the control technology installed as of 180 days after February 16, 2015, or the date on which you complete the emissions measurements used to support your emissions averaging plan (if the Administrator does not require submission and approval of your emissions averaging plan), or the date that you begin emissions averaging, whichever is earlier; and the date on which you are requesting emissions averaging to commence;

(ii) The process weighting parameter (heat input, gross output, or steam generated) that will be monitored for each averaging group;

(iii) The specific control technology or pollution prevention measure to be used for each emission EGU in the averaging group and the date of its installation or application. If the pollution prevention measure reduces or eliminates emissions from multiple EGUs, you must identify each EGU;

(iv) The means of measurement (e.g., CEMS, sorbent trap monitoring, manual performance test) of filterable PM, $SO_2$, HF, HCl, individual or total non-Hg HAP metals, or Hg emissions in accordance with the requirements in § 63.10007 and to be used in the emissions averaging calculations; and

(v) A demonstration that emissions averaging can produce compliance with each of the applicable emission limit(s) in accordance with paragraph (b)(1) of this section.

(2) If, as described in paragraph (f) of this section, the Administrator requests you to submit the averaging plan for review and approval, you must receive approval before initiating emissions averaging.

(i) The Administrator shall use following criteria in reviewing and approving or disapproving the plan:

(A) Whether the content of the plan includes all of the information specified in paragraph (j)(1) of this section; and

(B) Whether the plan presents information sufficient to determine that compliance will be achieved and maintained.

(ii) The Administrator shall not approve an emissions averaging implementation plan containing any of the following provisions:

(A) Any averaging between emissions of different pollutants or between units located at different facilities; or

(B) The inclusion of any emissions unit other than an existing unit in the same subcategory.

(k) *Common stack requirements*. For a group of two or more existing affected units, each of which vents through a single common stack, you may average emissions to demonstrate compliance with the limits in Table 2 to this subpart if you satisfy the requirements in paragraph (l) or (m) of this section.

(l) For a group of two or more existing units in the same subcategory and which vent through a common emissions control system to a common stack that does not receive emissions from units in other subcategories or categories, you may treat such averaging group as a single existing unit for purposes of this subpart and comply with the requirements of this subpart as if the group were a single unit.

(m) For all other groups of units subject to paragraph (k) of this section, you may elect to conduct manual performance tests according to procedures specified in § 63.10007 in the common stack. If emissions from affected units

included in the emissions averaging and from other units not included in the emissions averaging (e.g., in a different subcategory) or other nonaffected units all vent to the common stack, you must shut down the units not included in the emissions averaging and the nonaffected units or vent their emissions to a different stack during the performance test. Alternatively, you may conduct a performance test of the combined emissions in the common stack with all units operating and show that the combined emissions meet the most stringent emissions limit. You may also use a CEMS or sorbent trap monitoring to apply this latter alternative to demonstrate that the combined emissions comply with the most stringent emissions limit on a continuous basis.

(n) Combination requirements. The common stack of a group of two or more existing EGUs in the same subcategory subject to paragraph (k) of this section may be treated as a single stack for purposes of paragraph (c) of this section and included in an emissions averaging group subject to paragraph (c) of this section.

[77 FR 9464, Feb. 16, 2012, as amended at 77 FR 23403, Apr. 19, 2012; 78 FR 24085, Apr. 24, 2013; 81 FR 20183, Apr. 6, 2016; 85 FR 55757, Sept. 9, 2020]

### §63.10010 What are my monitoring, installation, operation, and maintenance requirements?

(a) Flue gases from the affected units under this subpart exhaust to the atmosphere through a variety of different configurations, including but not limited to individual stacks, a common stack configuration or a main stack plus a bypass stack. For the CEMS, PM CPMS, and sorbent trap monitoring systems used to provide data under this subpart, the continuous monitoring system installation requirements for these exhaust configurations are as follows:

(1) *Single unit-single stack configurations.* For an affected unit that exhausts to the atmosphere through a single, dedicated stack, you shall either install the required CEMS, PM CPMS, and sorbent trap monitoring systems in the stack or at a location in the ductwork downstream of all emissions control devices, where the pollutant and diluents concentrations are representative of the emissions that exit to the atmosphere.

(2) *Unit utilizing common stack with other affected unit(s).* When an affected unit utilizes a common stack with one or more other affected units, but no non-affected units, you shall either:

(i) Install the required CEMS, PM CPMS, and sorbent trap monitoring systems in the duct leading to the common stack from each unit; or

(ii) Install the required CEMS, PM CPMS, and sorbent trap monitoring systems in the common stack.

(3) *Unit(s) utilizing common stack with non-affected unit(s).* (i) When one or more affected units shares a common stack with one or more non-affected units, you shall either:

(A) Install the required CEMS, PM CPMS, and sorbent trap monitoring systems in the ducts leading to the common stack from each affected unit; or

(B) Install the required CEMS, PM CPMS, and sorbent trap monitoring systems described in this section in the common stack and attribute all of the emissions measured at the common stack to the affected unit(s).

(ii) If you choose the common stack monitoring option:

(A) For each hour in which valid data are obtained for all parameters, you must calculate the pollutant emission rate and

(B) You must assign the calculated pollutant emission rate to each unit that shares the common stack.

(4) *Unit with a main stack and a bypass stack that exhausts to the atmosphere independent of the main stack.* If the exhaust configuration of an affected unit consists of a main stack and a bypass stack, you shall install CEMS on both the main stack and the bypass stack. If it is not feasible to certify and quality-assure the data from a monitoring system on the bypass stack, you shall:

(i) Route the exhaust from the bypass through the main stack and its monitoring so that bypass emissions are measured; or

(ii) Install a CEMS only on the main stack and count hours that the bypass stack is in use as hours of deviation from the monitoring requirements.

(5) *Unit with a common control device with multiple stack or duct configuration.* If the flue gases from an affected unit, which is configured such that emissions are controlled with a common control device or series of control devices, are discharged to the atmosphere through more than one stack or are fed into a single stack through two or more ducts, you may:

(i) Install required CEMS, PM CPMS, and sorbent trap monitoring systems in each of the multiple stacks;

(ii) Install required CEMS, PM CPMS, and sorbent trap monitoring systems in each of the ducts that feed into the stack;

(iii) Install required CEMS, PM CPMS, and sorbent trap monitoring systems in one of the multiple stacks or ducts and monitor the flows and dilution rates in all multiple stacks or ducts in order to determine total exhaust gas flow rate and pollutant mass emissions rate in accordance with the applicable limit; or

(iv) In the case of multiple ducts feeding into a single stack, install CEMS, PM CPMS, and sorbent trap monitoring systems in the single stack as described in paragraph (a)(1) of this section.

(6) *Unit with multiple parallel control devices with multiple stacks.* If the flue gases from an affected unit, which is configured such that emissions are controlled with multiple parallel control devices or multiple series of control devices are discharged to the atmosphere through more than one stack, you shall install the required CEMS, PM CPMS, and sorbent trap monitoring systems described in each of the multiple stacks. You shall calculate hourly flow-weighted average pollutant emission rates for the unit as follows:

(i) Calculate the pollutant emission rate at each stack or duct for each hour in which valid data are obtained for all parameters;

(ii) Multiply each calculated hourly pollutant emission rate at each stack or duct by the corresponding hourly stack gas flow rate at that stack or duct;

(iii) Sum the products determined under paragraph (a)(6)(ii) of this section; and

(iv) Divide the result obtained in paragraph (a)(6)(iii) of this section by the total hourly stack gas flow rate for the unit, summed across all of the stacks or ducts.

(b) If you use an oxygen ($O_2$) or carbon dioxide ($CO_2$) CEMS to convert measured pollutant concentrations to the units of the applicable emissions limit, the $O_2$ or $CO_2$ concentrations shall be monitored at a location that represents emissions to the atmosphere, *i.e.*, at the outlet of the EGU, downstream of all emission control devices. You must install, certify, maintain, and operate the CEMS according to part 75 of this chapter. Use only quality-assured $O_2$ or $CO_2$ data in the emissions calculations; do not use part 75 substitute data values.

(c) If you are required to use a stack gas flow rate monitor, either for routine operation of a sorbent trap monitoring system or to convert pollutant concentrations to units of an electrical output-based emission standard in Table 1 or 2 to this subpart, you must install, certify, operate, and maintain the monitoring system and conduct ongoing quality-assurance testing of the system according to part 75 of this chapter. Use only unadjusted, quality-assured flow rate data in the emissions calculations. Do not apply bias adjustment factors to the flow rate data and do not use substitute flow rate data in the calculations.

(d) If you are required to make corrections for stack gas moisture content when converting pollutant concentrations to the units of an emission standard in Table 1 of 2 to this subpart, you must install, certify, operate, and maintain a moisture monitoring system in accordance with part 75 of this chapter. Alternatively, for coal-fired units, you may use appropriate fuel-specific default moisture values from § 75.11(b) of this chapter to estimate the moisture content of the stack gas or you may petition the Administrator under § 75.66 of this chapter for use of a default moisture value for non-coal-fired units. If you install and operate a moisture monitoring system, do not use substitute moisture data in the emissions calculations.

(e) If you use an HCl and/or HF CEMS, you must install, certify, operate, maintain, and quality-assure the data from the monitoring system in accordance with appendix B to this subpart. Calculate and record a 30-boiler operating day rolling average HCl or HF emission rate in the units of the standard, updated after each new boiler operating day. Each 30-boiler operating day rolling average emission rate is the average of all the valid hourly HCl or HF emission rates in the preceding 30 boiler operating days (see section 9.4 of appendix B to this subpart).

(f)(1) If you use an $SO_2$ CEMS, you must install the monitor at the outlet of the EGU, downstream of all emission control devices, and you must certify, operate, and maintain the CEMS according to part 75 of this chapter.

(2) For on-going QA, the $SO_2$ CEMS must meet the applicable daily, quarterly, and semiannual or annual requirements in sections 2.1 through 2.3 of appendix B to part 75 of this chapter, with the following addition: You must perform the linearity checks required in section 2.2 of appendix B to part 75 of this chapter if the $SO_2$ CEMS has a span value of 30 ppm or less.

(3) Calculate and record a 30-boiler operating day rolling average $SO_2$ emission rate in the units of the standard, updated after each new boiler operating day. Each 30-boiler operating day rolling average emission rate is the average of all of the valid hourly $SO_2$ emission rates in the 30 boiler operating day period.

(4) Use only unadjusted, quality-assured $SO_2$ concentration values in the emissions calculations; do not apply bias adjustment factors to the part 75 $SO_2$ data and do not use part 75 substitute data values. For startup or shutdown hours (as defined in §63.10042) the default gross output and the diluent cap are available for use in the hourly $SO_2$ emission rate calculations, as described in §63.10007(f). Use a flag to identify each startup or shutdown hour and report a special code if the diluent cap or default gross output is used to calculate the $SO_2$ emission rate for any of these hours.

(g) If you use a Hg CEMS or a sorbent trap monitoring system, you must install, certify, operate, maintain and quality-assure the data from the monitoring system in accordance with appendix A to this subpart. You must calculate and record a 30- (or, if alternate emissions averaging is used, 90-) boiler operating day rolling average Hg emission rate, in units of the standard, updated after each new boiler operating day. Each 30- (or, if alternate emissions averaging is used, 90-) boiler operating day rolling average emission rate, calculated according to section 6.2 of appendix A to the subpart, is the average of all of the valid hourly Hg emission rates in the preceding 30- (or, if alternate emissions averaging is used, a 90-) boiler operating days. Section 7.1.4.3 of appendix A to this subpart explains how to reduce sorbent trap monitoring system data to an hourly basis.

(h) If you use a PM CPMS to demonstrate continuous compliance with an operating limit, you must install, calibrate, maintain, and operate the PM CPMS and record the output of the system as specified in paragraphs (h)(1) through (5) of this section.

(1) Install, calibrate, operate, and maintain your PM CPMS according to the procedures in your approved site-specific monitoring plan developed in accordance with §63.10000(d), and meet the requirements in paragraphs (h)(1)(i) through (iii) of this section.

(i) The operating principle of the PM CPMS must be based on in-stack or extractive light scatter, light scintillation, beta attenuation, or mass accumulation detection of the exhaust gas or representative sample. The reportable measurement output from the PM CPMS may be expressed as milliamps, stack concentration, or other raw data signal.

(ii) The PM CPMS must have a cycle time (*i.e.*, period required to complete sampling, measurement, and reporting for each measurement) no longer than 60 minutes.

(iii) The PM CPMS must be capable, at a minimum, of detecting and responding to particulate matter concentrations of 0.5 mg/acm.

(2) For a new unit, complete the initial PM CPMS performance evaluation no later than October 13, 2012 or 180 days after the date of initial startup, whichever is later. For an existing unit, complete the initial performance

evaluation no later than October 13, 2015.

(3) Collect PM CPMS hourly average output data for all boiler operating hours except as indicated in paragraph (h)(5) of this section. Express the PM CPMS output as milliamps, PM concentration, or other raw data signal value.

(4) Calculate the arithmetic 30-boiler operating day rolling average of all of the hourly average PM CPMS output collected during all nonexempt boiler operating hours data (e.g., milliamps, PM concentration, raw data signal).

(5) You must collect data using the PM CPMS at all times the process unit is operating and at the intervals specified in paragraph (h)(1)(ii) of this section, except for required monitoring system quality assurance or quality control activities (including, as applicable, calibration checks and required zero and span adjustments), and any scheduled maintenance as defined in your site-specific monitoring plan.

(6) You must use all the data collected during all boiler operating hours in assessing the compliance with your operating limit except:

(i) Any data recorded during periods of monitoring system malfunctions or repairs associated with monitoring system malfunctions. You must report any monitoring system malfunctions as deviations in your compliance reports under 40 CFR 63.10031(c) or (g) (as applicable);

(ii) Any data recorded during periods when the monitoring system is out-of-control (as specified in your site-specific monitoring plan), repairs associated with periods when the monitoring system is out of control, or required monitoring system quality assurance or quality control activities conducted during out-of-control periods. You must report any such periods as deviations in your compliance reports under 40 CFR 63.10031(c) or (g) (as applicable);

(iii) Any data recorded during required monitoring system quality assurance or quality control activities that temporarily interrupt the measurement of output data from the PM CPMS; and

(iv) Any data recorded during periods of startup or shutdown.

(7) You must record and report the results of PM CPMS system performance audits, in accordance with 40 CFR 63.10031(k). You must also record and make available upon request the dates and duration of periods from when the PM CPMS is out of control until completion of the corrective actions necessary to return the PM CPMS to operation consistent with your site-specific monitoring plan.

(i) If you choose to comply with the PM filterable emissions limit in lieu of metal HAP limits, you may choose to install, certify, operate, and maintain a PM CEMS and record and report the output of the PM CEMS as specified in paragraphs (i)(1) through (8) of this section. Compliance with the applicable PM emissions limit in Table 1 or 2 to this subpart is determined on a 30-boiler operating day rolling average basis.

(1) You must install and certify your PM CEMS according to section 4 of appendix C to this subpart.

(2) You must operate, maintain, and quality-assure the data from your PM CEMS according to section 5 of appendix C to this subpart.

(3) You must reduce the data from your PM CEMS to hourly averages in accordance with section 6.1 of appendix C to this subpart.

(4) You must collect data using the PM CEMS at all times the process unit is operating and at the intervals specified in paragraph (a) of this section, except for required monitoring system quality assurance or quality control activities and any scheduled maintenance as defined in your site-specific monitoring plan.

(j) You may choose to comply with the metal HAP emissions limits using CEMS approved in accordance with § 63.7(f) as an alternative to the performance test method specified in this rule. If approved to use a HAP metals CEMS, the compliance limit will be expressed as a 30-boiler operating day rolling average of the numerical emissions limit value applicable for your unit in tables 1 or 2. If approved, you may choose to install, certify, operate, and maintain a HAP metals CEMS and record the output of the HAP metals CEMS as specified in paragraphs (j)(1) through (5) of this section.

(1)(i) Install, calibrate, operate, and maintain your HAP metals CEMS according to your CMS quality control program, as described in §63.8(d)(2). The reportable measurement output from the HAP metals CEMS must be expressed in units of the applicable emissions limit (*e.g.*, lb/MMBtu, lb/MWh) and in the form of a 30-boiler operating day rolling average.

(ii) Operate and maintain your HAP metals CEMS according to the procedures and criteria in your site specific performance evaluation and quality control program plan required in §63.8(d).

(2) Collect HAP metals CEMS hourly average output data for all boiler operating hours except as indicated in section (j)(4) of this section.

(3) Calculate the arithmetic 30-boiler operating day rolling average of all of the hourly average HAP metals CEMS output data collected during all non-exempt boiler operating hours data.

(4) You must collect data using the HAP metals CEMS at all times the process unit is operating and at the intervals specified in paragraph (a) of this section, except for required monitoring system quality assurance or quality control activities, and any scheduled maintenance as defined in your site-specific monitoring plan.

(i) You must use all the data collected during all boiler operating hours in assessing the compliance with your emission limit except:

(A) Any data collected during periods of monitoring system malfunctions and repairs associated with monitoring system malfunctions. You must report any monitoring system malfunctions as deviations in your compliance reports under 40 CFR 63.10031(c) or (g) (as applicable);

(B) Any data collected during periods when the monitoring system is out of control as specified in your site-specific monitoring plan, repairs associated with periods when the monitoring system is out of control, or required monitoring system quality assurance or quality control activities conducted during out-of-control periods. You must report any out of control periods as deviations in your compliance reports under 40 CFR 63.10031(c) or (g) (as applicable);

(C) Any data recorded during required monitoring system quality assurance or quality control activities that temporarily interrupt the measurement of emissions (*e.g.*, calibrations, certain audits, routine probe maintenance); and

(D) Any data recorded during periods of startup or shutdown.

(ii) You must record and report the results of HAP metals CEMS system performance audits, in accordance with 40 CFR 63.10031(k). You must also record and make available upon request the dates and duration of periods when the HAP metals CEMS is out of control to completion of the corrective actions necessary to return the HAP metals CEMS to operation consistent with your site-specific performance evaluation and quality control program plan.

(k) If you demonstrate compliance with the HCl and HF emission limits for a liquid oil-fired EGU by conducting quarterly testing, you must also develop a site-specific monitoring plan as provided for in §63.10000(c)(2)(iii) and Table 7 to this subpart.

(l) Should you choose to rely on paragraph (2) of the definition of ''startup'' in §63.10042 for your EGU, you must install, verify, operate, maintain, and quality assure each monitoring system necessary for demonstrating compliance with the PM or non-mercury metals work practice standards required to comply with §63.10020(e).

(1) You shall develop a site-specific monitoring plan for PM or non-mercury metals work practice monitoring during startup periods.

(2) You shall submit the site-specific monitoring plan upon request by the Administrator.

(3) The provisions of the monitoring plan must address the following items:

(i) Monitoring system installation;

(ii) Performance and equipment specifications;

(iii) Schedule for initial and periodic performance evaluations;

(iv) Performance evaluation procedures and acceptance criteria;

(v) On-going operation and maintenance procedures; and

(vi) On-going recordkeeping and reporting procedures.

(4) You may rely on monitoring system specifications or instructions or manufacturer's specifications to address paragraphs (l)(3)(i) through (vi) of this section.

(5) You must operate and maintain the monitoring system according to the site-specific monitoring plan.

[77 FR 9464, Feb. 16, 2012, as amended at 77 FR 23404, Apr. 19, 2012; 78 FR 24086, Apr. 24, 2013; 79 FR 68789, Nov. 19, 2014; 81 FR 20185, Apr. 6, 2016; 85 FR 55758, Sept. 9, 2020]

### § 63.10011 How do I demonstrate initial compliance with the emissions limits and work practice standards?

(a) You must demonstrate initial compliance with each emissions limit that applies to you by conducting performance testing.

(b) If you are subject to an operating limit in Table 4 to this subpart, you demonstrate initial compliance with HAP metals or filterable PM emission limit(s) through performance stack tests and you elect to use a PM CPMS to demonstrate continuous performance, or if, for a liquid oil-fired EGU, and you use quarterly stack testing for HCl and HF plus site-specific parameter monitoring to demonstrate continuous performance, you must also establish a site-specific operating limit, in accordance with § 63.10007 and Table 6 to this subpart. You may use only the parametric data recorded during successful performance tests (*i.e.*, tests that demonstrate compliance with the applicable emissions limits) to establish an operating limit.

(c)(1) If you use CEMS or sorbent trap monitoring systems to measure a HAP (*e.g.*, Hg or HCl) directly, the initial performance test, shall consist of a 30-boiler operating day (or, for certain coal-fired, existing EGUs that use emissions averaging for Hg, a 90-boiler operating day) rolling average emissions rate obtained with a certified CEMS or sorbent trap system, expressed in units of the standard. If the monitoring system is certified prior to the applicable compliance date, the initial averaging period shall either begin with: The first boiler operating day on or after the compliance date; or 30 (or, if applicable, 90) boiler operating days prior to that date, as described in § 63.10005(b). In all cases, the initial 30- or 90-boiler operating day averaging period must be completed on or before the date that compliance must be demonstrated, in accordance with § 63.9984(f). Initial compliance is demonstrated if the results of the performance test meet the applicable emission limit in Table 1 or 2 to this subpart.

(2) For an EGU that uses a CEMS to measure $SO_2$ or PM emissions for initial compliance, the initial performance test shall consist of a 30-boiler operating day average emission rate obtained with certified CEMS, expressed in units of the standard. If the monitoring system is certified prior to the applicable compliance date, the initial averaging period shall either begin with: The first boiler operating day on or after the compliance date; or 30 boiler operating days prior to that date, as described in § 63.10005(b). In all cases, the initial 30- boiler operating day averaging period must be completed on or before the date that compliance must be demonstrated, in accordance with § 63.9984(f). Initial compliance is demonstrated if the results of the performance test meet the applicable $SO_2$ or PM emission limit in Table 1 or 2 to this subpart.

(d) For candidate LEE units, use the results of the performance testing described in § 63.10005(h) to determine initial compliance with the applicable emission limit(s) in Table 1 or 2 to this subpart and to determine whether the unit qualifies for LEE status.

(e) You must submit a Notification of Compliance Status in accordance with 40 CFR 63.10031(f)(4) or (h), as applicable, containing the results of the initial compliance demonstration, as specified in 40 CFR 63.10030(e).

(f)(1) You must determine the fuel whose combustion produces the least uncontrolled emissions, *i.e.*, the cleanest fuel, either natural gas or distillate oil, that is available on site or accessible nearby for use during periods of startup or shutdown.

(2) Your cleanest fuel, either natural gas or distillate oil, for use during periods of startup or shutdown determination may take safety considerations into account.

(g) You must follow the startup or shutdown requirements as established in Table 3 to this subpart for each coal-

fired, liquid oil-fired, or solid oil-derived fuel-fired EGU.

(1) You may use the diluent cap and default gross output values, as described in § 63.10007(f), during startup periods or shutdown periods.

(2) You must operate all CMS, collect data, calculate pollutant emission rates, and record data during startup periods or shutdown periods.

(3) You must report the emissions data recorded during startup and shutdown. If you are relying on paragraph (2) of the definition of startup in 40 CFR 63.10042, then for startup and shutdown incidents that occur on or prior to December 31, 2023, you must also report the applicable supplementary information in 40 CFR 63.10031(c)(5) in the semiannual compliance report. For startup and shutdown incidents that occur on or after January 1, 2024, you must provide the applicable information in 40 CFR 63.10031(c)(5)(ii) and 40 CFR 63.10020(e) quarterly, in PDF files, in accordance with 40 CFR 63.10031(i).

(4) If you choose to use paragraph (2) of the definition of ''startup'' in § 63.10042 and you find that you are unable to safely engage and operate your particulate matter (PM) control(s) within 1 hour of first firing of coal, residual oil, or solid oil-derived fuel, you may choose to rely on paragraph (1) of definition of ''startup'' in § 63.10042 or you may submit a request to use an alternative non-opacity emissions standard, as described below.

(i) As mentioned in § 63.6(g)(1), your request will be published in the FEDERAL REGISTER for notice and comment rulemaking. Until promulgation in the FEDERAL REGISTER of the final alternative non-opacity emission standard, you shall comply with paragraph (1) of the definition of ''startup'' in § 63.10042. You shall not implement the alternative non-opacity emissions standard until promulgation in the FEDERAL REGISTER of the final alternative non-opacity emission standard.

(ii) Your request need not address the items contained in § 63.6(g)(2).

(iii) Your request shall provide evidence of a documented manufacturer-identified safety issue.

(iv) Your request shall provide information to document that the PM control device is adequately designed and sized to meet the PM emission limit applicable to the EGU.

(v) In addition, your request shall contain documentation that:

(A) Your EGU is using clean fuels to the maximum extent possible, taking into account considerations such as not compromising boiler or control device integrity, to bring your EGU and PM control device up to the temperature necessary to alleviate or prevent the identified safety issues prior to the combustion of primary fuel in your EGU;

(B) You have followed explicitly your EGU manufacturer's procedures to alleviate or prevent the identified safety issue; and

(C) You have identified with specificity the details of your EGU manufacturer's statement of concern.

(vi) Your request shall specify the other work practice standards you will take to limit HAP emissions during startup periods and shutdown periods to ensure a control level consistent with the work practice standards of the final rule.

(vii) You must comply with all other work practice requirements, including but not limited to data collection, recordkeeping, and reporting requirements.

[77 FR 9464, Feb. 16, 2012, as amended at 77 FR 23404, Apr. 19, 2012; 79 FR 68790, Nov. 19, 2014; 81 FR 20186, Apr. 6, 2016; 85 FR 55759, Sept. 9, 2020]

CONTINUOUS COMPLIANCE REQUIREMENTS

### § 63.10020 How do I monitor and collect data to demonstrate continuous compliance?

(a) You must monitor and collect data according to this section and the site-specific monitoring plan required by § 63.10000(d).

(b) You must operate the monitoring system and collect data at all required intervals at all times that the affected EGU is operating, except for required monitoring system quality assurance or quality control activities, including, as applicable, calibration checks and required zero and span adjustments, and any scheduled maintenance as defined in your site-specific monitoring plan. You are required to affect monitoring system repairs in response to

monitoring system malfunctions and to return the monitoring system to operation as expeditiously as practicable.

(c) You may not use data recorded during EGU startup or shutdown in calculations used to report emissions, except as otherwise provided in §§ 63.10000(c)(1)(vi)(B) and 63.10005(a)(2)(iii). In addition, data recorded during monitoring system malfunctions or monitoring system out-of-control periods, repairs associated with monitoring system malfunctions or monitoring system out-of-control periods, or required monitoring system quality assurance or control activities may not be used in calculations used to report emissions or operating levels. You must use all of the quality-assured data collected during all other periods in assessing the operation of the control device and associated control system.

(d) Periods of monitoring system malfunctions or monitoring system out-of-control periods, repairs associated with monitoring system malfunctions or monitoring system out-of-control periods, and required monitoring system quality assurance or quality control activities excluding zero and span checks must be reported as time the monitor was inoperative (downtime) under 63.10(c). Failure to collect required quality-assured data during monitoring system malfunctions, monitoring system out-of-control periods, or repairs associated with monitoring system malfunctions or monitoring system out-of-control periods is a deviation from the monitoring requirements.

(e) Additional requirements during startup periods or shutdown periods if you choose to rely on paragraph (2) of the definition of ''startup'' in § 63.10042 for your EGU.

(1) During each period of startup, you must record for each EGU:

(i) The date and time that clean fuels being combusted for the purpose of startup begins;

(ii) The quantity and heat input of clean fuel for each hour of startup;

(iii) The gross output for each hour of startup;

(iv) The date and time that non-clean fuel combustion begins; and

(v) The date and time that clean fuels being combusted for the purpose of startup ends.

(2) During each period of shutdown, you must record for each EGU:

(i) The date and time that clean fuels being combusted for the purpose of shutdown begins;

(ii) The quantity and heat input of clean fuel for each hour of shutdown;

(iii) The gross output for each hour of shutdown;

(iv) The date and time that non-clean fuel combustion ends; and

(v) The date and time that clean fuels being combusted for the purpose of shutdown ends.

(3) For PM or non-mercury HAP metals work practice monitoring during startup periods, you must monitor and collect data according to this section and the site-specific monitoring plan required by § 63.10010(l).

(i) Except for an EGU that uses PM CEMS or PM CPMS to demonstrate compliance with the PM emissions limit, or that has LEE status for filterable PM or total non-Hg HAP metals for non- liquid oil-fired EGUs (or HAP metals emissions for liquid oil-fired EGUs), or individual non-mercury metals CEMS, you must:

(A) Record temperature and combustion air flow or calculated flow as determined from combustion equations of post-combustion (exhaust) gas, as well as amperage of forced draft fan(s), upstream of the filterable PM control devices during each hour of startup.

(B) Record temperature and flow of exhaust gas, as well as amperage of any induced draft fan(s), downstream of the filterable PM control devices during each hour of startup.

(C) For an EGU with an electrostatic precipitator, record the number of fields in service, as well as each field's secondary voltage and secondary current during each hour of startup.

(D) For an EGU with a fabric filter, record the number of compartments in service, as well as the differential pressure across the baghouse during each hour of startup.

(E) For an EGU with a wet scrubber needed for filterable PM control, record the scrubber liquid to flue gas ratio and the pressure drop across the scrubber during each hour of startup.

(ii) [Reserved]

[77 FR 9464, Feb. 16, 2012, as amended at 77 FR 23404, Apr. 19, 2012; 79 FR 68790, Nov. 19, 2014; 81 FR 20187, Apr. 6, 2016; 85 FR 55759, Sept. 9, 2020]

### §63.10021 How do I demonstrate continuous compliance with the emission limitations, operating limits, and work practice standards?

(a) You must demonstrate continuous compliance with each emissions limit, operating limit, and work practice standard in Tables 1 through 4 to this subpart that applies to you, according to the monitoring specified in Tables 6 and 7 to this subpart and paragraphs (b) through (g) of this section.

(b) Except as otherwise provided in §63.10020(c), if you use a CEMS to measure $SO_2$, PM, HCl, HF, or Hg emissions, or using a sorbent trap monitoring system to measure Hg emissions, you must demonstrate continuous compliance by using all quality-assured hourly data recorded by the CEMS (or sorbent trap monitoring system) and the other required monitoring systems (e.g., flow rate, $CO_2$, $O_2$, or moisture systems) to calculate the arithmetic average emissions rate in units of the standard on a continuous 30-boiler operating day (or, if alternate emissions averaging is used for Hg, 90-boiler operating day) rolling average basis, updated at the end of each new boiler operating day. Use Equation 8 to determine the 30- (or, if applicable, 90-) boiler operating day rolling average.

$$Boiler\ operating\ day\ average = \frac{\sum_{i=1}^{n} Her_i}{n} \quad (Eq.\ 8)$$

Where:

$Her_i$ is the hourly emissions rate for hour i and n is the number of hourly emissions rate values collected over 30- (or, if applicable, 90-) boiler operating days.

(c) If you use a PM CPMS data to measure compliance with an operating limit in Table 4 to this subpart, you must record the PM CPMS output data for all periods when the process is operating and the PM CPMS is not out-of-control. You must demonstrate continuous compliance by using all quality-assured hourly average data collected by the PM CPMS for all operating hours to calculate the arithmetic average operating parameter in units of the operating limit (e.g., milliamps, PM concentration, raw data signal) on a 30 operating day rolling average basis, updated at the end of each new boiler operating day. Use Equation 9 to determine the 30 boiler operating day average.

$$30\ boiler\ operating\ day\ average = \frac{\sum_{i=1}^{n} Hpv_i}{n} \quad (Eq.\ 9)$$

Where:

$Hpv_i$ is the hourly parameter value for hour i and n is the number of valid hourly parameter values collected over 30 boiler operating days.

(1) For any exceedance of the 30-boiler operating day PM CPMS average value from the established operating parameter limit for an EGU subject to the emissions limits in Table 1 to this subpart, you must:

(i) Within 48 hours of the exceedance, visually inspect the air pollution control device (APCD);

(ii) If the inspection of the APCD identifies the cause of the exceedance, take corrective action as soon as possible, and return the PM CPMS measurement to within the established value; and

(iii) Within 45 days of the exceedance or at the time of the annual compliance test, whichever comes first, conduct a PM emissions compliance test to determine compliance with the PM emissions limit and to verify or re-establish the CPMS operating limit. You are not required to conduct any additional testing for any exceedances that occur between the time of the original exceedance and the PM emissions compliance test required under this paragraph.

(2) PM CPMS exceedances of the operating limit for an EGU subject to the emissions limits in Table 1 of this subpart leading to more than four required performance tests in a 12-month period (rolling monthly) constitute a separate violation of this subpart.

(d) If you use quarterly performance testing to demonstrate compliance with one or more applicable emissions limits in Table 1 or 2 to this subpart, you

(1) May skip performance testing in those quarters during which less than 168 boiler operating hours occur, except that a performance test must be conducted at least once every calendar year.

(2) Must conduct the performance test as defined in Table 5 to this subpart and calculate the results of the testing in units of the applicable emissions standard; and

(3) Must conduct site-specific monitoring using CMS to demonstrate compliance with the site-specific monitoring requirements in Table 7 to this subpart pertaining to HCl and HF emissions from a liquid oil-fired EGU to ensure compliance with the HCl and HF emission limits in Tables 1 and 2 to this subpart, in accordance with the requirements of § 63.10000(c)(2)(iii). The monitoring must meet the general operating requirements provided in § 63.10020.

(e) Conduct periodic performance tune-ups of your EGU(s), as specified in paragraphs (e)(1) through (9) of this section. For your first tune-up, you may perform the burner inspection any time prior to the tune-up or you may delay the first burner inspection until the next scheduled EGU outage provided you meet the requirements of § 63.10005. Subsequently, you must perform an inspection of the burner at least once every 36 calendar months unless your EGU employs neural network combustion optimization during normal operations in which case you must perform an inspection of the burner and combustion controls at least once every 48 calendar months. If your EGU is offline when a deadline to perform the tune-up passes, you shall perform the tune-up work practice requirements within 30 days after the restart of the affected unit.

(1) As applicable, inspect the burner and combustion controls, and clean or replace any components of the burner or combustion controls as necessary upon initiation of the work practice program and at least once every required inspection period. Repair of a burner or combustion control component requiring special order parts may be scheduled as follows:

(i) Burner or combustion control component parts needing replacement that affect the ability to optimize $NO_X$ and CO must be installed within 3 calendar months after the burner inspection,

(ii) Burner or combustion control component parts that do not affect the ability to optimize $NO_X$ and CO may be installed on a schedule determined by the operator;

(2) As applicable, inspect the flame pattern and make any adjustments to the burner or combustion controls necessary to optimize the flame pattern. The adjustment should be consistent with the manufacturer's specifications, if available, or in accordance with best combustion engineering practice for that burner type;

(3) As applicable, observe the damper operations as a function of mill and/or cyclone loadings, cyclone and pulverizer coal feeder loadings, or other pulverizer and coal mill performance parameters, making adjustments and effecting repair to dampers, controls, mills, pulverizers, cyclones, and sensors;

(4) As applicable, evaluate windbox pressures and air proportions, making adjustments and effecting repair to dampers, actuators, controls, and sensors;

(5) Inspect the system controlling the air-to-fuel ratio and ensure that it is

correctly calibrated and functioning properly. Such inspection may include calibrating excess $O_2$ probes and/or sensors, adjusting overfire air systems, changing software parameters, and calibrating associated actuators and dampers to ensure that the systems are operated as designed. Any component out of calibration, in or near failure, or in a state that is likely to negate combustion optimization efforts prior to the next tune-up, should be corrected or repaired as necessary;

(6) Optimize combustion to minimize generation of CO and $NO_X$. This optimization should be consistent with the manufacturer's specifications, if available, or best combustion engineering practice for the applicable burner type. $NO_X$ optimization includes burners, overfire air controls, concentric firing system improvements, neural network or combustion efficiency software, control systems calibrations, adjusting combustion zone temperature profiles, and add-on controls such as SCR and SNCR; CO optimization includes burners, overfire air controls, concentric firing system improvements, neural network or combustion efficiency software, control systems calibrations, and adjusting combustion zone temperature profiles;

(7) While operating at full load or the predominantly operated load, measure the concentration in the effluent stream of CO and $NO_X$ in ppm, by volume, and oxygen in volume percent, before and after the tune-up adjustments are made (measurements may be either on a dry or wet basis, as long as it is the same basis before and after the adjustments are made). You may use portable CO, $NO_X$ and $O_2$ monitors for this measurement. EGU's employing neural network optimization systems need only provide a single pre- and post-tune-up value rather than continual values before and after each optimization adjustment made by the system;

(8) Maintain on-site and submit, if requested by the Administrator, an annual report containing the information in paragraphs (e)(1) through (e)(9) of this section including:

(i) The concentrations of CO and $NO_X$ in the effluent stream in ppm by volume, and oxygen in volume percent, measured before and after an adjustment of the EGU combustion systems;

(ii) A description of any corrective actions taken as a part of the combustion adjustment; and

(iii) The type(s) and amount(s) of fuel used over the 12 calendar months prior to an adjustment, but only if the unit was physically and legally capable of using more than one type of fuel during that period; and

(9) Prior to January 1, 2024, report the tune-up date electronically, in a PDF file, in your semiannual compliance report, as specified in 40 CFR 63.10031(f)(4) and (6) and, if requested by the Administrator, in hard copy, as specified in 40 CFR 63.10031(f)(5). On and after January 1, 2024, report the tune-up date electronically in your quarterly compliance report, in accordance with 40 CFR 63.10031(g) and section 10.2 of appendix E to this subpart. The tune-up report date is the date when tune-up requirements in paragraphs (e)(6) and (7) of this section are completed.

(f) You must submit the applicable reports and notifications required under 40 CFR 63.10031(a) through (k) to the Administrator electronically, using EPA's Emissions Collection and Monitoring Plan System (ECMPS) Client Tool. If the final date of any time period (or any deadline) for any of these submissions falls on a weekend or a Federal holiday, the time period shall be extended to the next business day. Moreover, if the EPA Host System supporting the ECMPS Client Tool is offline and unavailable for submission of reports for any part of a day when a report would otherwise be due, the deadline for reporting is automatically extended until the first business day on which the system becomes available following the outage. Use of the ECMPS Client Tool to submit a report or notification required under this subpart satisfies any requirement under subpart A of this part to submit that same report or notification (or the information contained in it) to the appropriate EPA Regional office or state agency whose delegation request has been approved.

(g) You must report each instance in which you did not meet an applicable emissions limit or operating limit in

Tables 1 through 4 to this subpart or failed to conduct a required tune-up. These instances are deviations from the requirements of this subpart. These deviations must be reported according to § 63.10031.

(h) You must follow the startup or shutdown requirements as given in Table 3 to this subpart for each coal-fired, liquid oil-fired, or solid oil-derived fuel-fired EGU.

(1) You may use the diluent cap and default gross output values, as described in § 63.10007(f), during startup periods or shutdown periods.

(2) You must operate all CMS, collect data, calculate pollutant emission rates, and record data during startup periods or shutdown periods.

(3) [Reserved]

(4) You may choose to submit an alternative non-opacity emission standard, in accordance with the requirements contained in § 63.10011(g)(4). Until promulgation in the FEDERAL REGISTER of the final alternative non-opacity emission standard, you shall comply with paragraph (1) of the definition of ''startup'' in § 63.10042.

(i) If you are relying on paragraph 2 of the definition of startup in 40 CFR 63.10042, you must provide reports concerning activities and periods of startup and shutdown that occur on or prior to January 1, 2024, in accordance with 40 CFR 63.10031(c)(5), in your semi-annual compliance report. For startup and shutdown incidents that occur on and after January 1, 2024, you must provide the applicable information referenced in 40 CFR 63.10031(c)(5)(ii) and 40 CFR 63.10020(e) quarterly, in PDF files, in accordance with 40 CFR 63.10031(i).

[77 FR 9464, Feb. 16, 2012, as amended at 77 FR 23404, Apr. 19, 2012; 78 FR 24086, Apr. 24, 2013; 79 FR 68791, Nov. 19, 2014; 81 FR 20187, Apr. 6, 2016; 82 FR 16739, Apr. 6, 2017; 83 FR 30883, July 2, 2018; 85 FR 55759, Sept. 9, 2020]

### § 63.10022 How do I demonstrate continuous compliance under the emissions averaging provision?

(a) Following the compliance date, the owner or operator must demonstrate compliance with this subpart on a continuous basis by meeting the requirements of paragraphs (a)(1) through (4) of this section.

(1) For each 30- (or 90-) day rolling average period, demonstrate compliance with the average weighted emissions limit for the existing units participating in the emissions averaging option as determined in § 63.10009(f) and (g);

(2) For each existing unit participating in the emissions averaging option that is equipped with PM CPMS, maintain the average parameter value at or below the operating limit established during the most recent performance test;

(3) For each existing unit participating in the emissions averaging option venting to a common stack configuration containing affected units from other subcategories, maintain the appropriate operating limit for each unit as specified in Table 4 to this subpart that applies.

(4) For each existing EGU participating in the emissions averaging option, operate in accordance with the startup or shutdown work practice requirements given in Table 3 to this subpart.

(b) Any instance where the owner or operator fails to comply with the continuous monitoring requirements in paragraphs (a)(1) through (3) of this section is a deviation.

[77 FR 9464, Feb. 16, 2012, as amended at 77 FR 23404, Apr. 19, 2012; 79 FR 68791, Nov. 19, 2014]

### § 63.10023 How do I establish my PM CPMS operating limit and determine compliance with it?

(a) During the initial performance test or any such subsequent performance test that demonstrates compliance with the filterable PM, individual non-mercury HAP metals, or total non-mercury HAP metals limit (or for liquid oil-fired units, individual HAP metals or total HAP metals limit, including Hg) in Table 1 or 2, record all hourly average output values (e.g., milliamps, stack concentration, or other raw data signal) from the PM CPMS for the periods corresponding to the test runs (e.g., nine 1-hour average PM CPMS output values for three 3-hour test runs).

(b) Determine your operating limit as provided in paragraph (b)(1) or (b)(2) of

this section. You must verify an existing or establish a new operating limit after each repeated performance test.

(1) [Reserved]

(2) Determine your operating limit as follows:

(i) If your PM performance test demonstrates your PM emissions do not exceed 75 percent of your emissions limit, you will use the average PM CPMS value recorded during the PM compliance test, the milliamp equivalent of zero output from your PM CPMS, and the average PM result of your compliance test to establish your operating limit. Calculate the operating limit by establishing a relationship of PM CPMS signal to PM concentration using the PM CPMS instrument zero, the average PM CPMS values corresponding to the three compliance test runs, and the average PM concentration from the Method 5 compliance test with the procedures in (b)(2)(i)(A) through (D) of this section.

(A) Determine your PM CPMS instrument zero output with one of the following procedures.

(*1*) Zero point data for in-situ instruments should be obtained by removing the instrument from the stack and monitoring ambient air on a test bench.

(*2*) Zero point data for extractive instruments should be obtained by removing the extractive probe from the stack and drawing in clean ambient air.

(*3*) The zero point can also can be obtained by performing manual reference method measurements when the flue gas is free of PM emissions or contains very low PM concentrations (e.g., when your process is not operating, but the fans are operating or your source is combusting only natural gas) and plotting these with the compliance data to find the zero intercept.

(*4*) If none of the steps in paragraphs (A)(*1*) through (*3*) of this section are possible, you must use a zero output value provided by the manufacturer.

(B) Determine your PM CPMS instrument average ($x$) in milliamps, and the average of your corresponding three PM compliance test runs ($y$), using equation 10.

$$\bar{x} = \frac{1}{n}\sum_{i=1}^{n} X_i, \bar{y} = \frac{1}{n}\sum_{i=1}^{n} Y_i \qquad \text{(Eq. 10)}$$

Where:

$X_i$ = the PM CPMS data points for run i of the performance test,

$Y_i$ = the PM emissions value (in lb/MWh) for run i of the performance test, and

n = the number of data points.

(C) With your PM CPMS instrument zero expressed in milliamps, your three run average PM CPMS milliamp value, and your three run average PM emissions value (in lb/MWh) from your compliance runs, determine a relationship of PM lb/MWh per milliamp with equation 11.

$$R = \frac{y}{(x - z)} \qquad \text{(Eq. 11)}$$

Where:

R = the relative PM lb/MWh per milliamp for your PM CPMS,

$\bar{y}$ = the three run average PM lb/MWh,

$\bar{y}x$ = the three run average milliamp output from your PM CPMS, and

z = the milliamp equivalent of your instrument zero determined from (b)(2)(i)(A) of this section.

(D) Determine your source specific 30-day rolling average operating limit using the PM lb/MWh per milliamp value from equation 11 in equation 12, below. This sets your operating limit at the PM CPMS output value corresponding to 75 percent of your emission limit.

$$O_L = z + \frac{(0.75 \times L)}{R} \quad \text{(Eq. 12)}$$

Where:

$O_L$ = the operating limit for your PM CPMS on a 30-day rolling average, in milliamps,

L = your source PM emissions limit in lb/MWh,

z = your instrument zero in milliamps, determined from (b)(2)(i)(A) of this section, and

R = the relative PM lb/MWh per milliamp for your PM CPMS, from equation 11.

(ii) If your PM compliance test demonstrates your PM emissions exceed 75 percent of your emissions limit, you will use the average PM CPMS value recorded during the PM compliance test demonstrating compliance with the PM limit to establish your operating limit.

(A) Determine your operating limit by averaging the PM CPMS milliamp output corresponding to your three PM performance test runs that demonstrate compliance with the emission limit using equation 13.

$$O_h = \frac{1}{n}\sum_{i=1}^{n} X_i \quad \text{(Eq. 13)}$$

Where:

$X_i$ = the PM CPMS data points for all runs i,

n = the number of data points, and

$O_h$ = your site specific operating limit, in milliamps.

(iii) Your PM CPMS must provide a 4–20 milliamp output and the establishment of its relationship to manual reference method measurements must be determined in units of milliamps.

(iv) Your PM CPMS operating range must be capable of reading PM concentrations from zero to a level equivalent to two times your allowable emission limit. If your PM CPMS is an auto-ranging instrument capable of multiple scales, the primary range of the instrument must be capable of reading PM concentration from zero to a level equivalent to two times your allowable emission limit.

(v) During the initial performance test or any such subsequent performance test that demonstrates compliance with the PM limit, record and average all milliamp output values from the PM CPMS for the periods corresponding to the compliance test runs.

(vi) For PM performance test reports used to set a PM CPMS operating limit, the electronic submission of the test report must also include the make and model of the PM CPMS instrument, serial number of the instrument, analytical principle of the instrument (e.g. beta attenuation), span of the instruments primary analytical range, milliamp value equivalent to the instrument zero output, technique by which this zero value was determined, and the average milliamp signal corresponding to each PM compliance test run.

(c) You must operate and maintain your process and control equipment such that the 30 operating day average PM CPMS output does not exceed the

operating limit determined in paragraphs (a) and (b) of this section.

[77 FR 9464, Feb. 16, 2012, as amended at 78 FR 24086, Apr. 24, 2013; 81 FR 20187, Apr. 6, 2016]

NOTIFICATION, REPORTS, AND RECORDS

### §63.10030 What notifications must I submit and when?

(a) You must submit all of the notifications in §§63.7(b) and (c), 63.8 (e), (f)(4) and (6), and 63.9 (b) through (h) that apply to you by the dates specified.

(b) As specified in §63.9(b)(2), if you startup your EGU that is an affected source before April 16, 2012, you must submit an Initial Notification not later than 120 days after April 16, 2012.

(c) As specified in §63.9(b)(4) and (b)(5), if you startup your new or reconstructed EGU that is an affected source on or after April 16, 2012, you must submit an Initial Notification not later than 15 days after the actual date of startup of the EGU that is an affected source.

(d) When you are required to conduct a performance test, you must submit a Notification of Intent to conduct a performance test at least 30 days before the performance test is scheduled to begin.

(e) When you are required to conduct an initial compliance demonstration as specified in §63.10011(a), you must submit a Notification of Compliance Status according to §63.9(h)(2)(ii). The Notification of Compliance Status report must contain all of the information specified in paragraphs (e)(1) through (8) of this section, that applies to your initial compliance strategy.

(1) A description of the affected source(s), including identification of the subcategory of the source, the design capacity of the source, a description of the add-on controls used on the source, description of the fuel(s) burned, including whether the fuel(s) were determined by you or EPA through a petition process to be a non-waste under 40 CFR 241.3, whether the fuel(s) were processed from discarded non-hazardous secondary materials within the meaning of 40 CFR 241.3, and justification for the selection of fuel(s) burned during the performance test.

(2) Summary of the results of all performance tests and fuel analyses and calculations conducted to demonstrate initial compliance including all established operating limits.

(3) Identification of whether you plan to demonstrate compliance with each applicable emission limit through performance testing; fuel moisture analyses; performance testing with operating limits (e.g., use of PM CPMS); CEMS; or a sorbent trap monitoring system.

(4) Identification of whether you plan to demonstrate compliance by emissions averaging.

(5) A signed certification that you have met all applicable emission limits and work practice standards.

(6) If you had a deviation from any emission limit, work practice standard, or operating limit, you must also submit a brief description of the deviation, the duration of the deviation, emissions point identification, and the cause of the deviation in the Notification of Compliance Status report.

(7) Except for requests to switch from one emission limit to another, as provided in paragraph (e)(7)(iii) of this section, your initial notification of compliance status shall also include the following information:

(i) [Reserved]

(ii) Certifications of compliance, as applicable, and must be signed by a responsible official stating:

(A) ''This EGU complies with the requirements in §63.10021(a) to demonstrate continuous compliance.'' and

(B) ''No secondary materials that are solid waste were combusted in any affected unit.''

(iii) For each of your existing EGUs, identification of each emissions limit specified in Table 2 to this subpart with which you plan to comply initially. (*Note:* If, at some future date, you wish to switch from the limit specified in your initial notification of compliance status, you must follow the procedures and meet the conditions of paragraphs (e)(7)(iii)(A) through (C) of this section).

(A) You may switch from a mass per heat input to a mass per gross output limit (or vice-versa), provided that:

(*1*) You submit a request that identifies for each EGU or EGU emissions

averaging group involved in the proposed switch both the current and proposed emission limit;

(*2*) Your request arrives to the Administrator at least 30 calendar days prior to the date that the switch is proposed to occur;

(*3*) Your request includes performance stack test results or valid CMS data, obtained within 45 days prior to the date of your submission, demonstrating that each EGU or EGU emissions averaging group is in compliance with both the mass per heat input limit and the mass per gross output limit;

(*4*) You revise and submit all other applicable plans, *e.g.*, monitoring and emissions averaging, with your request; and

(*5*) You maintain records of all information regarding your choice of emission limits.

(B) You must begin to use the revised emission limits starting in the next reporting period, after receipt of written acknowledgement from the Administrator of the switch.

(C) From submission of your request until start of the next reporting period after receipt of written acknowledgement from the Administrator of the switch, you must demonstrate compliance with both the mass per heat input and mass per gross output emission limits for each pollutant for each EGU or EGU emissions averaging group.

(8) Identification of whether you plan to rely on paragraph (1) or (2) of the definition of ''startup'' in § 63.10042.

(i) Should you choose to rely on paragraph (2) of the definition of ''startup'' in § 63.10042 for your EGU, you shall include a report that identifies:

(A) The original EGU installation date;

(B) The original EGU design characteristics, including, but not limited to, fuel mix and PM controls;

(C) Each design PM control device efficiency established during performance testing or while operating in periods other than startup and shutdown periods;

(D) The design PM emission rate from the EGU in terms of pounds PM per MMBtu and pounds PM per hour established during performance testing or while operating in periods other than startup and shutdown periods;

(E) The design time from start of fuel combustion to necessary conditions for each PM control device startup;

(F) Each design PM control device efficiency upon startup of the PM control device, if different from the efficiency provided in paragraph (e)(8)(i)(C) of this section;

(G) Current EGU PM producing characteristics, including, but not limited to, fuel mix and PM controls, if different from the characteristics provided in paragraph (e)(8)(i)(B) of this section;

(H) Current PM control device efficiency from each PM control device, if different from the efficiency provided in paragraph (e)(8)(i)(C) of this section;

(I) Current PM emission rate from the EGU in terms of pounds PM per MMBtu and pounds per hour, if different from the rate provided in paragraph (e)(8)(i)(D) of this section;

(J) Current time from start of fuel combustion to conditions necessary for each PM control device startup, if different from the time provided in paragraph (e)(8)(i)(E) of this section; and

(K) Current PM control device efficiency upon startup of each PM control device, if different from the efficiency provided in paragraph (e)(8)(i)(H) of this section.

(ii) The report shall be prepared, signed, and sealed by a professional engineer licensed in the state where your EGU is located.

(iii) You may switch from paragraph (1) of the definition of ''startup'' in § 63.10042 to paragraph (2) of the definition of ''startup'' (or vice-versa), provided that:

(A) You submit a request that identifies for each EGU or EGU emissions averaging group involved in the proposed switch both the current definition of ''startup'' relied on and the proposed definition you plan to rely on;

(B) Your request arrives to the Administrator at least 30 calendar days prior to the date that the switch is proposed to occur;

(C) You revise and submit all other applicable plans, *e.g.*, monitoring and emissions averaging, with your submission;

(D) You maintain records of all information regarding your choice of the definition of ''startup''; and

(E) You begin to use the revised definition of ''startup'' in the next reporting period after receipt of written acknowledgement from the Administrator of the switch.

(f) You must submit the notifications in §63.10000(h)(2) and (i)(2) that may apply to you by the dates specified.

[77 FR 9464, Feb. 16, 2012, as amended at 77 FR 23404, Apr. 19, 2012; 78 FR 24087, Apr. 24, 2013; 79 FR 68791, Nov. 19, 2014; 81 FR 20187, Apr. 6, 2016; 85 FR 55760, Sept. 9, 2020]

### §63.10031 What reports must I submit and when?

(a) You must submit each report in this section that applies to you.

(1) If you are required to (or elect to) monitor Hg emissions continuously, you must meet the electronic reporting requirements of appendix A to this subpart.

(2) If you elect to monitor HCl and/or HF emissions continuously, you must meet the electronic reporting requirements of appendix B to this subpart. Notwithstanding this requirement, if you opt to certify your HCl monitor according to Performance Specification 18 in appendix B to part 60 of this chapter and to use Procedure 6 in appendix F to part 60 of this chapter for on-going QA of the monitor, then, on and prior to December 31, 2023, report only hourly HCl emissions data and the results of daily calibration drift tests and relative accuracy test audits (RATAs) performed on or prior to that date; keep records of all of the other required certification and QA tests and report them, starting in 2024.

(3) If you elect to monitor filterable PM emissions continuously, you must meet the electronic reporting requirements of appendix C to this subpart. Electronic reporting of hourly PM emissions data shall begin with the later of the first operating hour on or after January 1, 2024; or the first operating hour after completion of the initial PM CEMS correlation test.

(4) If you elect to demonstrate continuous compliance using a PM CPMS, you must meet the electronic reporting requirements of appendix D to this subpart. Electronic reporting of the hourly PM CPMS output shall begin with the later of the first operating hour on or after January 1, 2024; or the first operating hour after completion of the initial performance stack test that establishes the operating limit for the PM CPMS.

(5) If you elect to monitor $SO_2$ emission rate continuously as a surrogate for HCl, you must use the ECMPS Client Tool to submit the following information to EPA (except where it is already required to be reported or has been previously provided under the Acid Rain Program or another emissions reduction program that requires the use of part 75 of this chapter):

(i) Monitoring plan information for the $SO_2$ CEMS and for any additional monitoring systems that are required to convert $SO_2$ concentrations to units of the emission standard, in accordance with sections 75.62 and 75.64(a)(4) of this chapter;

(ii) Certification, recertification, quality-assurance, and diagnostic test results for the $SO_2$ CEMS and for any additional monitoring systems that are required to convert $SO_2$ concentrations to units of the emission standard, in accordance with section 75.64(a)(5); and

(iii) Quarterly electronic emissions reports. You must submit an electronic quarterly report within 30 days after the end of each calendar quarter, starting with a report for the calendar quarter in which the initial 30 boiler operating day performance test begins. Each report must include the following information:

(A) The applicable operating data specified in section 75.57(b) of this chapter;

(B) An hourly data stream for the unadjusted $SO_2$ concentration (in ppm, rounded to one decimal place), and separate unadjusted hourly data streams for the other parameters needed to convert the $SO_2$ concentrations to units of the standard. (*Note:* If a default moisture value is used in the emission rate calculations, an hourly data stream is not required for moisture; rather, the default value must be reported in the electronic monitoring plan.);

(C) An hourly $SO_2$ emission rate data stream, in units of the standard (*i.e.*, lb/MMBtu or lb/MWh, as applicable), calculated according to 40 CFR

63.10007(e) and (f)(1), rounded to the same precision as the emission standard (*i.e.*, with one leading non-zero digit and one decimal place), expressed in scientific notation. Use the following rounding convention: If the digit immediately following the first decimal place is 5 or greater, round the first decimal place upward (increase it by one); if the digit immediately following the first decimal place is 4 or less, leave the first decimal place unchanged;

(D) The results of all required daily quality-assurance tests of the $SO_2$ monitor and the additional monitors used to convert $SO_2$ concentration to units of the standard, as specified in appendix B to part 75 of this chapter; and

(E) A compliance certification, which includes a statement, based on reasonable inquiry of those persons with primary responsibility for ensuring that all $SO_2$ emissions from the affected EGUs under this subpart have been correctly and fully monitored, by a responsible official with that official's name, title, and signature, certifying that, to the best of his or her knowledge, the report is true, accurate, and complete. You must submit such a compliance certification statement in support of each quarterly report.

(b) You must submit semiannual compliance reports according to the requirements in paragraphs (b)(1) through (5) of this section.

(1) The first compliance report must cover the period beginning on the compliance date that is specified for your affected source in 40 CFR 63.9984 (or, if applicable, the extended compliance date approved under 40 CFR 63.6(i)(4)) and ending on June 30 or December 31, whichever date is the first date that occurs at least 180 days after the compliance date that is specified for your source in 40 CFR 63.9984 (or, if applicable, the extended compliance date approved under 40 CFR 63.6(i)(4)).

(2) The first compliance report must be submitted electronically no later than July 31 or January 31, whichever date is the first date following the end of the first calendar half after the compliance date that is specified for your source in 40 CFR 63.9984 (or, if applicable, the extended compliance date approved under 40 CFR 63.6(i)(4)).

(3) Each subsequent compliance report must cover the semiannual reporting period from January 1 through June 30 or the semiannual reporting period from July 1 through December 31.

(4) Each subsequent compliance report must be submitted electronically no later than July 31 or January 31, whichever date is the first date following the end of the semiannual reporting period.

(5) For each affected source that is subject to permitting regulations pursuant to part 70 or part 71 of this chapter, and if the permitting authority has established dates for submitting semiannual reports pursuant to 40 CFR 70.6(a)(3)(iii)(A) or 40 CFR 71.6(a)(3)(iii)(A), through the reporting period that ends December 31, 2023, you may submit the first and subsequent compliance reports according to the dates the permitting authority has established instead of according to the dates in paragraphs (b)(1) through (4) of this section.

(6) The final semiannual compliance report shall cover the reporting period from July 1, 2023, through December 31, 2023. Quarterly compliance reports shall be submitted thereafter, in accordance with paragraph (g) of this section, starting with a report covering the first calendar quarter of 2024.

(c) The semiannual compliance report must contain the information required in paragraphs (c)(1) through (10) of this section.

(1) The information required by the summary report located in 63.10(e)(3)(vi).

(2) The total fuel use by each affected source subject to an emission limit, for each calendar month within the semiannual reporting period, including, but not limited to, a description of the fuel, whether the fuel has received a non-waste determination by EPA or your basis for concluding that the fuel is not a waste, and the total fuel usage amount with units of measure.

(3) Indicate whether you burned new types of fuel during the reporting period. If you did burn new types of fuel you must include the date of the performance test where that fuel was in use.

(4) Include the date of the most recent tune-up for each EGU. The date of the tune-up is the date the tune-up provisions specified in §63.10021(e)(6) and (7) were completed.

(5) Should you choose to rely on paragraph (2) of the definition of ''startup'' in §63.10042 for your EGU, for each instance of startup or shutdown you shall:

(i) Include the maximum clean fuel storage capacity and the maximum hourly heat input that can be provided for each clean fuel determined according to the requirements of §63.10032(f).

(ii) Include the information required to be monitored, collected, or recorded according to the requirements of §63.10020(e).

(iii)—(v) [Reserved]

(6) You must report emergency bypass information annually from EGUs with LEE status.

(7) A summary of the results of the annual performance tests and documentation of any operating limits that were reestablished during the test, if applicable. If you are conducting stack tests once every 3 years to maintain LEE status, consistent with §63.10006(b), the date of each stack test conducted during the previous 3 years, a comparison of emission level you achieved in each stack test conducted during the previous 3 years to the 50 percent emission limit threshold required in §63.10005(h)(1)(i), and a statement as to whether there have been any operational changes since the last stack test that could increase emissions.

(8) A certification.

(9) If you have a deviation from any emission limit, work practice standard, or operating limit, you must also submit a brief description of the deviation, the duration of the deviation, emissions point identification, and the cause of the deviation.

(10) If you had any process or control equipment malfunction(s) during the reporting period, you must include the number, duration, and a brief description for each type of malfunction which occurred during the semiannual reporting period which caused or may have caused any applicable emission limitation to be exceeded.

(d) Excess emissions and deviation reporting. For EGUs whose owners or operators rely on a CMS to comply with an emissions or operating limit, the semiannual compliance reports described in paragraph (c) of this section must include the excess emissions and monitor downtime summary report described in 40 CFR 63.10(e)(3)(vi). However, starting with the first calendar quarter of 2024, reporting of the information under 40 CFR 63.10(e)(3)(vi) (and under paragraph (e)(3)(v), if the applicable excess emissions and/or monitor downtime threshold is exceeded) is discontinued for all CMS, and you must, instead, include in the quarterly compliance reports described in paragraph (g) of this section the applicable data elements in section 13 of appendix E to this subpart for any ''deviation'' (as defined in 40 CFR 63.10042 and elsewhere in this subpart) that occurred during the calendar quarter. If there were no deviations, you must include a statement to that effect in the quarterly compliance report.

(e) Each affected source that has obtained a title V operating permit pursuant to part 70 or part 71 of this chapter must report all deviations as defined in this subpart in the semiannual monitoring report required by 40 CFR 70.6(a)(3)(iii)(A) or 40 CFR 71.6(a)(3)(iii)(A). If an affected source submits a semiannual compliance report pursuant to paragraphs (c) and (d) of this section, or two quarterly compliance reports covering the appropriate calendar half pursuant to paragraph (g) of this section, along with, or as part of, the semiannual monitoring report required by 40 CFR 70.6(a)(3)(iii)(A) or 40 CFR 71.6(a)(3)(iii)(A), and the compliance report(s) includes all required information concerning deviations from any emission limit, operating limit, or work practice requirement in this subpart, submission of the compliance report(s) satisfies any obligation to report the same deviations in the semiannual monitoring report. Submission of the compliance report(s) does not otherwise affect any obligation the affected source may have to report deviations from permit requirements to the permit authority.

(f) For each performance stack test completed prior to January 1, 2024, (including 30- (or 90-) boiler operating day Hg LEE demonstration tests and PM tests to establish operating limits for PM CPMS), you must submit a PDF test report in accordance with paragraph (f)(6) of this section, no later than 60 days after the date on which the testing is completed. For each test completed on or after January 1, 2024, in accordance with 40 CFR 63.10031(g), submit the applicable reference method information in sections 17 through 31 of appendix E to this subpart along with the quarterly compliance report for the calendar quarter in which the test was completed.

(1) For each RATA of an Hg, HCl, HF, or $SO_2$ monitoring system completed prior to January 1, 2024, and for each PM CEMS correlation test, each relative response audit (RRA) and each response correlation audit (RCA) of a PM CEMS completed prior to that date, you must submit a PDF test report in accordance with paragraph (f)(6) of this section, no later than 60 days after the date on which the test is completed. For each $SO_2$ or Hg RATA completed on or after January 1, 2024, you must submit the applicable reference method information in sections 17 through 31 of appendix E to this subpart prior to or concurrent with the relevant quarterly emissions report. For HCl or HF RATAs, and for correlation tests, RRAs, and RCAs of PM CEMS that are completed on or after January 1, 2024, submit the appendix E reference method information together with the summarized electronic test results, in accordance with section 11.4 of appendix B to this subpart or section 7.2.4 of appendix C to this part, as applicable.

(2) If, for a particular EGU or a group of EGUs serving a common stack, you have elected to demonstrate compliance using a PM CEMS, an approved HAP metals CEMS, or a PM CPMS, you must submit quarterly PDF reports in accordance with paragraph (f)(6) of this section, which include all of the 30-boiler operating day rolling average emission rates derived from the CEMS data or the 30-boiler operating day rolling average responses derived from the PM CPMS data (as applicable). The quarterly reports are due within 60 days after the reporting periods ending on March 31st, June 30th, September 30th, and December 31st. Submission of these quarterly reports in PDF files shall end with the report that covers the fourth calendar quarter of 2023. Beginning with the first calendar quarter of 2024, the compliance averages shall no longer be reported separately, but shall be incorporated into the quarterly compliance reports described in paragraph (g) of this section. In addition to the compliance averages for PM CEMS, PM CPMS, and/or HAP metals CEMS, the quarterly compliance reports described in paragraph (g) of this section must also include the 30- (or, if applicable 90-) boiler operating day rolling average emission rates for Hg, HCl, HF, and/or $SO_2$, if you have elected to (or are required to) continuously monitor these pollutants. Further, if your EGU or common stack is in an averaging plan, your quarterly compliance reports must identify all of the EGUs or common stacks in the plan and must include all of the 30- (or 90-) group boiler operating day rolling weighted average emission rates (WAERs) for the averaging group.

(3) [Reserved]

(4) You must submit semiannual compliance reports as required under paragraphs (b) through (d) of this section, ending with a report covering the semiannual period from July 1 through December 31, 2023, and Notifications of Compliance Status as required under section 63.10030(e), as PDF files. Quarterly compliance reports shall be submitted in XML format thereafter, in accordance with paragraph (g) of this section, starting with a report covering the first calendar quarter of 2024.

(5) All reports required by this subpart not subject to the requirements in paragraphs (f) introductory text and (f)(1) through (4) of this section must be sent to the Administrator at the appropriate address listed in § 63.13. If acceptable to both the Administrator and the owner or operator of an EGU, these reports may be submitted on electronic media. The Administrator retains the right to require submittal of reports subject to paragraphs (f) introductory text and (f)(1) through (4) of this section in paper format.

(6) All reports and notifications described in paragraphs (f) introductory text, (f)(1), (2), and (4) of this section shall be submitted to the EPA in the specified format and at the specified frequency, using the ECMPS Client Tool. Each PDF version of a stack test report, CEMS RATA report, PM CEMS correlation test report, RRA report, and RCA report must include sufficient information to assess compliance and to demonstrate that the reference method testing was done properly. Note that EPA will continue to accept, as necessary, PDF reports that are being phased out at the end of 2023, if the submission deadlines for those reports extend beyond December 31, 2023. The following data elements must be entered into the ECMPS Client Tool at the time of submission of each PDF file:

(i) The facility name, physical address, mailing address (if different from the physical address), and county;

(ii) The ORIS code (or equivalent ID number assigned by EPA's Clean Air Markets Division (CAMD)) and the Facility Registry System (FRS) ID;

(iii) The EGU (or EGUs) to which the report applies. Report the EGU IDs as they appear in the CAMD Business System;

(iv) If any of the EGUs in paragraph (f)(6)(iii) of this section share a common stack, indicate which EGUs share the stack. If emissions data are monitored and reported at the common stack according to part 75 of this chapter, report the ID number of the common stack as it is represented in the electronic monitoring plan required under §75.53 of this chapter;

(v) If any of the EGUs described in paragraph (f)(6)(iii) of this section are in an averaging plan under §63.10009, indicate which EGUs are in the plan and whether it is a 30- or 90-day averaging plan;

(vi) The identification of each emission point to which the report applies. An ''emission point'' is a point at which source effluent is released to the atmosphere, and is either a dedicated stack that serves one of the EGUs identified in paragraph (f)(6)(iii) of this section or a common stack that serves two or more of those EGUs. To identify an emission point, associate it with the EGU or stack ID in the CAMD Business system or the electronic monitoring plan (*e.g.*, ''Unit 2 stack,'' ''common stack CS001,'' or ''multiple stack MS001'');

(vii) An indication of the type of PDF report or notification being submitted;

(viii) The pollutant(s) being addressed in the report;

(ix) The reporting period being covered by the report (if applicable);

(x) The relevant test method that was performed for a performance test (if applicable);

(xi) The date the performance test was completed (if applicable) and the test number (if applicable); and

(xii) The responsible official's name, title, and phone number.

(g) Starting with a report for the first calendar quarter of 2024, you must use the ECMPS Client Tool to submit quarterly electronic compliance reports. Each quarterly compliance report shall include the applicable data elements in sections 2 through 13 of appendix E to this subpart. For each stack test summarized in the compliance report, you must also submit the applicable reference method information in sections 17 through 31 of appendix E to this subpart. The compliance reports and associated appendix E information must be submitted no later than 60 days after the end of each calendar quarter.

(h) On and after January 1, 2024, initial Notifications of Compliance Status (if any) shall be submitted in accordance with 40 CFR 63.9(h)(2)(ii), as PDF files, using the ECMPS Client Tool. The applicable data elements in paragraphs (f)(6)(i) through (xii) of this section must be entered into ECMPS with each Notification.

(i) If you have elected to use paragraph (2) of the definition of ''startup'' in 40 CFR 63.10042, then, for startup and shutdown incidents that occur on or prior to December 31, 2023, you must include the information in 40 CFR 63.10031(c)(5) in the semiannual compliance report, in a PDF file. If you have elected to use paragraph (2) of the definition of ''startup'' in 40 CFR 63.10042, then, for startup and shutdown event(s) that occur on or after January 1, 2024, you must use the ECMPS Client Tool to submit the information in 40 CFR

63.10031(c)(5) and 40 CFR 63.10020(e) along with each quarterly compliance report, in a PDF file, starting with a report for the first calendar quarter of 2024. The applicable data elements in paragraphs (f)(6)(i) through (xii) of this section must be entered into ECMPS with each startup and shutdown report.

(j) If you elect to use a certified PM CEMS to monitor PM emissions continuously to demonstrate compliance with this subpart and have begun recording valid data from the PM CEMS prior to November 9, 2020, you must use the ECMPS Client Tool to submit a detailed report of your PS 11 correlation test (see appendix B to part 60 of this chapter) in a PDF file no later than 60 days after that date. For a correlation test completed on or after November 9, 2020, but prior to January 1, 2024, you must submit the PDF report no later than 60 days after the date on which the test is completed. For a correlation test completed on or after January 1, 2024, you must submit the PDF report according to section 7.2.4 of appendix C to this subpart. The applicable data elements in paragraph (f)(6)(i) through (xii) of this section must be entered into ECMPS with the PDF report.

(k) If you elect to demonstrate compliance using a PM CPMS or an approved HAP metals CEMS, you must submit quarterly reports of your QA/QC activities (*e.g.*, calibration checks, performance audits), in a PDF file, beginning with a report for the first quarter of 2024, if the PM CPMS or HAP metals CEMS is used for the compliance demonstration in that quarter. Otherwise, submit a report for the first calendar quarter in which the PM CPMS or HAP metals CEMS is used to demonstrate compliance. These reports are due no later than 60 days after the end of each calendar quarter. The applicable data elements in paragraph (f)(6)(i) through (xii) of this section must be entered into ECMPS with the PDF report.

[77 FR 9464, Feb. 16, 2012, as amended at 77 FR 23404, Apr. 19, 2012; 79 FR 68791, Nov. 19, 2014; 79 FR 68799, Nov. 19, 2014; 80 FR 15514, Mar. 24, 2015; 81 FR 20188, Apr. 6, 2016; 82 FR 16739, Apr. 6, 2017; 83 FR 30883, July 2, 2018; 85 FR 55760, Sept. 9, 2020]

## § 63.10032 What records must I keep?

(a) You must keep records according to paragraphs (a)(1) and (2) of this section. If you are required to (or elect to) continuously monitor Hg and/or HCl and/or HF and/or PM emissions, or if you elect to use a PM CPMS, you must keep the records required under appendix A and/or appendix B and/or appendix C and/or appendix D to this subpart. If you elect to conduct periodic (*e.g.*, quarterly or annual) performance stack tests, then, for each test completed on or after January 1, 2024, you must keep records of the applicable data elements under 40 CFR 63.7(g). You must also keep records of all data elements and other information in appendix E to this subpart that apply to your compliance strategy.

(1) In accordance with 40 CFR 63.10(b)(2)(xiv), a copy of each notification or report that you submit to comply with this subpart. You must also keep records of all supporting documentation for the initial Notifications of Compliance Status, semiannual compliance reports, or quarterly compliance reports that you submit.

(2) Records of performance stack tests, fuel analyses, or other compliance demonstrations and performance evaluations, as required in § 63.10(b)(2)(viii).

(b) For each CEMS and CPMS, you must keep records according to paragraphs (b)(1) through (4) of this section.

(1) Records described in § 63.10(b)(2)(vi) through (xi).

(2) Previous (*i.e.*, superseded) versions of the performance evaluation plan as required in § 63.8(d)(3).

(3) Request for alternatives to relative accuracy test for CEMS as required in § 63.8(f)(6)(i).

(4) Records of the date and time that each deviation started and stopped, and whether the deviation occurred during a period of startup, shutdown, or malfunction or during another period.

(c) You must keep the records required in Table 7 to this subpart including records of all monitoring data and calculated averages for applicable PM CPMS operating limits to show continuous compliance with each emission limit and operating limit that applies to you.

(d) For each EGU subject to an emission limit, you must also keep the records in paragraphs (d)(1) through (3) of this section.

(1) You must keep records of monthly fuel use by each EGU, including the type(s) of fuel and amount(s) used.

(2) If you combust non-hazardous secondary materials that have been determined not to be solid waste pursuant to 40 CFR 241.3(b)(1), you must keep a record which documents how the secondary material meets each of the legitimacy criteria. If you combust a fuel that has been processed from a discarded non-hazardous secondary material pursuant to 40 CFR 241.3(b)(2), you must keep records as to how the operations that produced the fuel satisfies the definition of processing in 40 CFR 241.2. If the fuel received a non-waste determination pursuant to the petition process submitted under 40 CFR 241.3(c), you must keep a record which documents how the fuel satisfies the requirements of the petition process.

(3) For an EGU that qualifies as an LEE under § 63.10005(h), you must keep annual records that document that your emissions in the previous stack test(s) continue to qualify the unit for LEE status for an applicable pollutant, and document that there was no change in source operations including fuel composition and operation of air pollution control equipment that would cause emissions of the pollutant to increase within the past year.

(e) If you elect to average emissions consistent with § 63.10009, you must additionally keep a copy of the emissions averaging implementation plan required in § 63.10009(g), all calculations required under § 63.10009, including daily records of heat input or steam generation, as applicable, and monitoring records consistent with § 63.10022.

(f) Regarding startup periods or shutdown periods:

(1) Should you choose to rely on paragraph (1) of the definition of ''startup'' in § 63.10042 for your EGU, you must keep records of the occurrence and duration of each startup or shutdown.

(2) Should you choose to rely on paragraph (2) of the definition of ''startup'' in § 63.10042 for your EGU, you must keep records of:

(i) The determination of the maximum possible clean fuel capacity for each EGU;

(ii) The determination of the maximum possible hourly clean fuel heat input and of the hourly clean fuel heat input for each EGU; and

(iii) The information required in § 63.10020(e).

(g) You must keep records of the occurrence and duration of each malfunction of an operation (*i.e.*, process equipment) or the air pollution control and monitoring equipment.

(h) You must keep records of actions taken during periods of malfunction to minimize emissions in accordance with § 63.10000(b), including corrective actions to restore malfunctioning process and air pollution control and monitoring equipment to its normal or usual manner of operation.

(i) You must keep records of the type(s) and amount(s) of fuel used during each startup or shutdown.

(j) If you elect to establish that an EGU qualifies as a limited-use liquid oil-fired EGU, you must keep records of the type(s) and amount(s) of fuel use in each calendar quarter to document that the capacity factor limitation for that subcategory is met.

[77 FR 9464, Feb. 16, 2012, as amended at 79 FR 68792, Nov. 19, 2014; 81 FR 20189, Apr. 6, 2016; 85 FR 55763, Sept. 9, 2020]

### § 63.10033 In what form and how long must I keep my records?

(a) Your records must be in a form suitable and readily available for expeditious review, according to § 63.10(b)(1).

(b) As specified in § 63.10(b)(1), you must keep each record for 5 years following the date of each occurrence, measurement, maintenance, corrective action, report, or record.

(c) You must keep each record on site for at least 2 years after the date of each occurrence, measurement, maintenance, corrective action, report, or record, according to § 63.10(b)(1). You can keep the records off site for the remaining 3 years.

OTHER REQUIREMENTS AND INFORMATION

### § 63.10040 What parts of the General Provisions apply to me?

Table 9 to this subpart shows which parts of the General Provisions in §§ 63.1 through 63.15 apply to you.

### § 63.10041 Who implements and enforces this subpart?

(a) This subpart can be implemented and enforced by U.S. EPA, or a delegated authority such as your state, local, or tribal agency. If the EPA Administrator has delegated authority to your state, local, or tribal agency, then that agency (as well as the U.S. EPA) has the authority to implement and enforce this subpart. You should contact your EPA Regional Office to find out if this subpart is delegated to your state, local, or tribal agency.

(b) In delegating implementation and enforcement authority of this subpart to a state, local, or tribal agency under 40 CFR part 63, subpart E, the authorities listed in paragraphs (b)(1) through (4) of this section are retained by the EPA Administrator and are not transferred to the state, local, or tribal agency; moreover, the U.S. EPA retains oversight of this subpart and can take enforcement actions, as appropriate, with respect to any failure by any person to comply with any provision of this subpart.

(1) Approval of alternatives to the non-opacity emission limits and work practice standards in § 63.9991(a) and (b) under § 63.6(g).

(2) Approval of major change to test methods in Table 5 to this subpart under § 63.7(e)(2)(ii) and (f) and as defined in § 63.90, approval of minor and intermediate changes to monitoring performance specifications/procedures in Table 5 where the monitoring serves as the performance test method (see definition of ''test method'' in § 63.2.

(3) Approval of major changes to monitoring under § 63.8(f) and as defined in § 63.90.

(4) Approval of major change to recordkeeping and reporting under § 63.10(e) and as defined in § 63.90.

### § 63.10042 What definitions apply to this subpart?

Terms used in this subpart are defined in the Clean Air Act (CAA), in § 63.2 (the General Provisions), and in this section as follows:

*Affirmative defense* means, in the context of an enforcement proceeding, a response or defense put forward by a defendant, regarding which the defendant has the burden of proof, and the merits of which are independently and objectively evaluated in a judicial or administrative proceeding.

*Anthracite coal* means solid fossil fuel classified as anthracite coal by American Society of Testing and Materials (ASTM) Method D388–05, ''Standard Classification of Coals by Rank'' (incorporated by reference, see § 63.14).

*Bituminous coal* means coal that is classified as bituminous according to ASTM Method D388–05, ''Standard Classification of Coals by Rank'' (incorporated by reference, see § 63.14).

*Boiler operating day* means a 24-hour period that begins at midnight and ends the following midnight during which any fuel is combusted at any time in the EGU, excluding startup periods or shutdown periods. It is not necessary for the fuel to be combusted the entire 24-hour period.

*Capacity factor* for a liquid oil-fired EGU means the total annual heat input from oil divided by the product of maximum hourly heat input for the EGU, regardless of fuel, multiplied by 8,760 hours.

*Clean fuel* means natural gas, synthetic natural gas that meets the specification necessary for that gas to be transported on a Federal Energy Regulatory Commission (FERC) regulated pipeline, propane, distillate oil, synthesis gas that has been processed through a gas clean-up train such that it could be used in a system's combustion turbine, or ultra-low-sulfur diesel (ULSD) oil, including those fuels meeting the requirements of 40 CFR part 80, subpart I (''Subpart I—Motor Vehicle Diesel Fuel; Nonroad, Locomotive, and Marine Diesel Fuel; and ECA Marine Fuel'').

*Coal* means all solid fuels classifiable as anthracite, bituminous, sub-bituminous, or lignite by ASTM Method D388–05, ''Standard Classification of

Coals by Rank'' (incorporated by reference, see §63.14), and coal refuse. Synthetic fuels derived from coal for the purpose of creating useful heat including but not limited to, coal derived gases (not meeting the definition of natural gas), solvent-refined coal, coal-oil mixtures, and coal-water mixtures, are considered ''coal'' for the purposes of this subpart.

*Coal-fired electric utility steam generating unit* means an electric utility steam generating unit meeting the definition of ''fossil fuel-fired'' that burns coal for more than 10.0 percent of the average annual heat input during the 3 previous calendar years after the compliance date for your facility in §63.9984 or for more than 15.0 percent of the annual heat input during any one of those calendar years. EGU owners and operators must estimate coal, oil, and natural gas usage for the first 3 calendar years after the applicable compliance date and they are solely responsible for assuring compliance with this final rule or other applicable standard based on their fuel usage projections. After the first 3 years of compliance, EGUs are required to evaluate applicability based on coal or oil usage from the three previous calendars years on an annual rolling basis.

*Coal refuse* means waste products of coal mining, physical coal cleaning, and coal preparation operations (*e.g.* culm, gob, etc.) containing coal, matrix material, clay, and other organic and inorganic material.

*Cogeneration* means a steam-generating unit that simultaneously produces both electrical and useful thermal (or mechanical) energy from the same primary energy source.

*Cogeneration unit* means a stationary, fossil fuel-fired EGU meeting the definition of ''fossil fuel-fired'' or stationary, integrated gasification combined cycle:

(1) Having equipment used to produce electricity and useful thermal energy for industrial, commercial, heating, or cooling purposes through the sequential use of energy; and

(2) Producing during the 12-month period starting on the date the unit first produces electricity and during any calendar year after which the unit first produces electricity:

(i) For a topping-cycle cogeneration unit,

(A) Useful thermal energy not less than 5 percent of total energy output; and

(B) Useful power that, when added to one-half of useful thermal energy produced, is not less than 42.5 percent of total energy input, if useful thermal energy produced is 15 percent or more of total energy output, or not less than 45 percent of total energy input, if useful thermal energy produced is less than 15 percent of total energy output.

(ii) For a bottoming-cycle cogeneration unit, useful power not less than 45 percent of total energy input.

(3) Provided that the total energy input under paragraphs (2)(i)(B) and (2)(ii) of this definition shall equal the unit's total energy input from all fuel except biomass if the unit is a boiler.

*Combined-cycle gas stationary combustion turbine* means a stationary combustion turbine system where heat from the turbine exhaust gases is recovered by a waste heat boiler.

*Common stack* means the exhaust of emissions from two or more affected units through a single flue.

*Continental liquid oil-fired subcategory* means any oil-fired electric utility steam generating unit that burns liquid oil and is located in the continental United States.

*Default electrical load* means an electrical load equal to 5 percent of the maximum sustainable electrical output (megawatts), as defined in section 6.5.2.1(a)(1) of Appendix A to part 75 of this chapter, of an affected EGU that is in startup or shutdown mode. For monitored common stack configurations, the default electrical load is 5 percent of the combined maximum sustainable electrical load of the EGUs that are in startup or shutdown mode during an hour in which the electrical load for all operating EGUs is zero. The default electrical load is used to calculate the electrical output-based emission rate (lb/MWh or lb/GWh, as applicable) for any startup or shutdown hour in which the actual electrical load is zero. The default electrical load is not used for EGUs required to make heat input-based emission rate (lb/MMBtu or lb/TBtu, as applicable) calculations. For

the purposes of this subpart, the default electrical load is not considered to be a substitute data value.

*Deviation*. (1) *Deviation* means any instance in which an affected source subject to this subpart, or an owner or operator of such a source:

(i) Fails to meet any requirement or obligation established by this subpart including, but not limited to, any emission limit, operating limit, work practice standard, or monitoring requirement; or

(ii) Fails to meet any term or condition that is adopted to implement an applicable requirement in this subpart and that is included in the operating permit for any affected source required to obtain such a permit.

(2) A deviation is not always a violation. The determination of whether a deviation constitutes a violation of the standard is up to the discretion of the entity responsible for enforcement of the standards.

*Diluent cap* means a default $CO_2$ or $O_2$ concentration that may be used to calculate the Hg, HCl, HF, PM, or $SO_2$ emission rate (lb/MMBtu or lb/TBtu, as applicable) during a startup or shutdown hour in which the measured $CO_2$ concentration is below the cap value or the measured $O_2$ concentration is above the cap value. The appropriate diluent cap values for EGUs are presented in § 63.10007(f) and in section 6.2.1.2 of Appendix A to this subpart. For the purposes of this subpart, the diluent cap is not considered to be a substitute data value.

*Distillate oil* means fuel oils, including recycled oils, that comply with the specifications for fuel oil numbers 1 and 2, as defined by ASTM Method D396–10, ''Standard Specification for Fuel Oils'' (incorporated by reference, see § 63.14).

*Dry flue gas desulfurization technology*, or *dry FGD*, or *spray dryer absorber* (*SDA*), or *spray dryer*, or *dry scrubber* means an add-on air pollution control system located downstream of the steam generating unit that injects a dry alkaline sorbent (dry sorbent injection) or sprays an alkaline sorbent slurry (spray dryer) to react with and neutralize acid gases such as $SO_2$ and HCl in the exhaust stream forming a dry powder material. Alkaline sorbent injection systems in fluidized bed combustors (FBC) or circulating fluidized bed (CFB) boilers are included in this definition.

*Dry sorbent injection* (DSI) means an add-on air pollution control system in which sorbent (e.g., conventional activated carbon, brominated activated carbon, Trona, hydrated lime, sodium carbonate, etc.) is injected into the flue gas steam upstream of a PM control device to react with and neutralize acid gases (such as $SO_2$ and HCl) or Hg in the exhaust stream forming a dry powder material that may be removed in a primary or secondary PM control device.

*Eastern bituminous coal refuse (EBCR)* means coal refuse generated from the mining of bituminous coal in Pennsylvania and West Virginia.

*Electric Steam generating unit* means any furnace, boiler, or other device used for combusting fuel for the purpose of producing steam (including fossil-fuel-fired steam generators associated with integrated gasification combined cycle gas turbines; nuclear steam generators are not included) for the purpose of powering a generator to produce electricity or electricity and other thermal energy.

*Electric utility steam generating unit (EGU)* means a fossil fuel-fired combustion unit of more than 25 megawatts electric (MWe) that serves a generator that produces electricity for sale. A fossil fuel-fired unit that cogenerates steam and electricity and supplies more than one-third of its potential electric output capacity and more than 25 MWe output to any utility power distribution system for sale is considered an electric utility steam generating unit.

*Emission limitation* means any emissions limit, work practice standard, or operating limit.

*Excess emissions* means, with respect to this subpart, results of any required measurements outside the applicable range (e.g., emissions limitations, parametric operating limits) that is permitted by this subpart. The values of measurements will be in the same units and averaging time as the values specified in this subpart for the limitations.

*Federally enforceable* means all limitations and conditions that are enforceable by the Administrator, including the requirements of 40 CFR parts 60, 61, and 63; requirements within any applicable state implementation plan; and any permit requirements established under 40 CFR 52.21 or under 40 CFR 51.18 and 40 CFR 51.24.

*Flue gas desulfurization system* means any add-on air pollution control system located downstream of the steam generating unit whose purpose or effect is to remove at least 50 percent of the $SO_2$ in the exhaust gas stream.

*Fossil fuel* means natural gas, oil, coal, and any form of solid, liquid, or gaseous fuel derived from such material.

*Fossil fuel-fired* means an electric utility steam generating unit (EGU) that is capable of producing more than 25 MW of electrical output from the combustion of fossil fuels. To be ''capable of combusting'' fossil fuels, an EGU would need to have these fuels allowed in its operating permit and have the appropriate fuel handling facilities on-site or otherwise available (*e.g.*, coal handling equipment, including coal storage area, belts and conveyers, pulverizers, etc.; oil storage facilities). In addition, fossil fuel-fired means any EGU that fired fossil fuels for more than 10.0 percent of the average annual heat input during the 3 previous calendar years after the compliance date for your facility in §63.9984 or for more than 15.0 percent of the annual heat input during any one of those calendar years. EGU owners and operators must estimate coal, oil, and natural gas usage for the first 3 calendar years after the applicable compliance date and they are solely responsible for assuring compliance with this final rule or other applicable standard based on their fuel usage projections. After the first 3 years of compliance, EGUs are required to evaluate applicability based on coal or oil usage from the three previous calendars years on an annual rolling basis.

*Fuel type* means each category of fuels that share a common name or classification. Examples include, but are not limited to, bituminous coal, subbituminous coal, lignite, anthracite, biomass, and residual oil. Individual fuel types received from different suppliers are not considered new fuel types.

*Fluidized bed boiler*, or *fluidized bed combustor*, or *circulating fluidized boiler*, or *CFB* means a boiler utilizing a fluidized bed combustion process.

*Fluidized bed combustion* means a process where a fuel is burned in a bed of granulated particles which are maintained in a mobile suspension by the upward flow of air and combustion products.

*Gaseous fuel* includes, but is not limited to, natural gas, process gas, landfill gas, coal derived gas, solid oil-derived gas, refinery gas, and biogas.

*Generator* means a device that produces electricity.

*Gross output* means the gross useful work performed by the steam generated and, for an IGCC electric utility steam generating unit, the work performed by the stationary combustion turbines. For a unit generating only electricity, the gross useful work performed is the gross electrical output from the unit's turbine/generator sets. For a cogeneration unit, the gross useful work performed is the gross electrical output, including any such electricity used in the power production process (which process includes, but is not limited to, any on-site processing or treatment of fuel combusted at the unit and any on-site emission controls), or mechanical output plus 75 percent of the useful thermal output measured relative to ISO conditions that is not used to generate additional electrical or mechanical output or to enhance the performance of the unit (*i.e.*, steam delivered to an industrial process).

*Heat input* means heat derived from combustion of fuel in an EGU (synthetic gas for an IGCC) and does not include the heat input from preheated combustion air, recirculated flue gases, or exhaust gases from other sources such as gas turbines, internal combustion engines, etc.

*Integrated gasification combined cycle electric utility steam generating unit* or *IGCC* means an electric utility steam generating unit meeting the definition of ''fossil fuel-fired'' that burns a synthetic gas derived from coal and/or solid oil-derived fuel for more than 10.0

percent of the average annual heat input during the 3 previous calendar years after the compliance date for your facility in § 63.9984 or for more than 15.0 percent of the annual heat input during any one of those calendar years in a combined-cycle gas turbine. EGU owners and operators must estimate coal, oil, and natural gas usage for the first 3 calendar years after the applicable compliance date and they are solely responsible for assuring compliance with this final rule or other applicable standard based on their fuel usage projections. No solid coal or solid oil-derived fuel is directly burned in the unit during operation. After the first 3 years of compliance, EGUs are required to evaluate applicability based on coal or oil usage from the three previous calendars years on an annual rolling basis.

*ISO conditions* means a temperature of 288 Kelvin, a relative humidity of 60 percent, and a pressure of 101.3 kilopascals.

*Lignite coal* means coal that is classified as lignite A or B according to ASTM Method D388–05, ''Standard Classification of Coals by Rank'' (incorporated by reference, see § 63.14).

*Limited-use liquid oil-fired subcategory* means an oil-fired electric utility steam generating unit with an annual capacity factor when burning oil of less than 8 percent of its maximum or nameplate heat input, whichever is greater, averaged over a 24-month block contiguous period commencing on the first of the month following the compliance date specified in § 63.9984.

*Liquid fuel* includes, but is not limited to, distillate oil and residual oil.

*Monitoring system malfunction* means any sudden, infrequent, not reasonably preventable failure of the monitoring system to provide valid data. Monitoring system failures that are caused in part by poor maintenance or careless operation are not malfunctions.

*Natural gas* means a naturally occurring fluid mixture of hydrocarbons (e.g., methane, ethane, or propane) produced in geological formations beneath the Earth's surface that maintains a gaseous state at standard atmospheric temperature and pressure under ordinary conditions. Natural gas contains 20.0 grains or less of total sulfur per 100 standard cubic feet. Additionally, natural gas must either be composed of at least 70 percent methane by volume or have a gross calorific value between 950 and 1,100 Btu per standard cubic foot. Natural gas does not include the following gaseous fuels: landfill gas, digester gas, refinery gas, sour gas, blast furnace gas, coal-derived gas, producer gas, coke oven gas, or any gaseous fuel produced in a process which might result in highly variable sulfur content or heating value.

*Natural gas-fired electric utility steam generating unit* means an electric utility steam generating unit meeting the definition of ''fossil fuel-fired'' that is not a coal-fired, oil-fired, or IGCC electric utility steam generating unit and that burns natural gas for more than 10.0 percent of the average annual heat input during the 3 previous calendar years after the compliance date for your facility in § 63.9984 or for more than 15.0 percent of the annual heat input during any one of those calendar years. EGU owners and operators must estimate coal, oil, and natural gas usage for the first 3 calendar years after the applicable compliance date and they are solely responsible for assuring compliance with this final rule or other applicable standard based on their fuel usage projections.

*Net-electric output* means the gross electric sales to the utility power distribution system minus purchased power on a calendar year basis.

*Net summer capacity* means the maximum output, commonly expressed in megawatts (MW), that generating equipment can supply to system load, as demonstrated by a multi-hour test, at the time of summer peak demand (period of June 1 through September 30.) This output reflects a reduction in capacity due to electricity use for station service or auxiliaries.

*Neural network* or *neural net* for purposes of this rule means an automated boiler optimization system. A neural network typically has the ability to process data from many inputs to develop, remember, update, and enable algorithms for efficient boiler operation.

*Non-continental area* means the State of Hawaii, the Virgin Islands, Guam, American Samoa, the Commonwealth

of Puerto Rico, or the Northern Mariana Islands.

*Non-continental liquid oil-fired subcategory* means any oil-fired electric utility steam generating unit that burns liquid oil and is located outside the continental United States.

*Non-mercury (Hg) HAP metals* means Antimony (Sb), Arsenic (As), Beryllium (Be), Cadmium (Cd), Chromium (Cr), Cobalt (Co), Lead (Pb), Manganese (Mn), Nickel (Ni), and Selenium (Se).

*Oil* means crude oil or petroleum or a fuel derived from crude oil or petroleum, including distillate and residual oil, solid oil-derived fuel (e.g., petroleum coke) and gases derived from solid oil-derived fuels (not meeting the definition of natural gas).

*Oil-fired electric utility steam generating unit* means an electric utility steam generating unit meeting the definition of ''fossil fuel-fired'' that is not a coal-fired electric utility steam generating unit and that burns oil for more than 10.0 percent of the average annual heat input during the 3 previous calendar years after the compliance date for your facility in §63.9984 or for more than 15.0 percent of the annual heat input during any one of those calendar years. EGU owners and operators must estimate coal, oil, and natural gas usage for the first 3 calendar years after the applicable compliance date and they are solely responsible for assuring compliance with this final rule or other applicable standard based on their fuel usage projections. After the first 3 years of compliance, EGUs are required to evaluate applicability based on coal or oil usage from the three previous calendars years on an annual rolling basis.

*Out-of-control period*, as it pertains to continuous monitoring systems, means any period:

(1) Beginning with the hour corresponding to the completion of a daily calibration or quality assurance audit that indicates that the instrument fails to meet the applicable acceptance criteria; and

(2) Ending with the hour corresponding to the completion of an additional calibration or quality assurance audit following corrective action showing that the instrument meets the applicable acceptance criteria.

*Particulate matter* or *PM* means any finely divided solid material as measured by the test methods specified under this subpart, or an alternative method.

*Pulverized coal (PC) boiler* means an EGU in which pulverized coal is introduced into an air stream that carries the coal to the combustion chamber of the EGU where it is fired in suspension.

*Residual oil* means crude oil, and all fuel oil numbers 4, 5 and 6, as defined by ASTM Method D396–10, ''Standard Specification for Fuel Oils'' (incorporated by reference, see §63.14).

*Responsible official* means responsible official as defined in 40 CFR 70.2.

*Shutdown* means the period in which cessation of operation of an EGU is initiated for any purpose. Shutdown begins when the EGU no longer generates electricity or makes useful thermal energy (such as heat or steam) for industrial, commercial, heating, or cooling purposes or when no coal, liquid oil, syngas, or solid oil-derived fuel is being fired in the EGU, whichever is earlier. Shutdown ends when the EGU no longer generates electricity or makes useful thermal energy (such as steam or heat) for industrial, commercial, heating, or cooling purposes, and no fuel is being fired in the EGU. Any fraction of an hour in which shutdown occurs constitutes a full hour of shutdown.

*Startup* means:

(1) Either the first-ever firing of fuel in a boiler for the purpose of producing electricity, or the firing of fuel in a boiler after a shutdown event for any purpose. Startup ends when any of the steam from the boiler is used to generate electricity for sale over the grid or for any other purpose (including onsite use). Any fraction of an hour in which startup occurs constitutes a full hour of startup; or

(2) The period in which operation of an EGU is initiated for any purpose. Startup begins with either the firing of any fuel in an EGU for the purpose of producing electricity or useful thermal energy (such as heat or steam) for industrial, commercial, heating, or cooling purposes (other than the first-ever firing of fuel in a boiler following construction of the boiler) or for any other

purpose after a shutdown event. Startup ends 4 hours after the EGU generates electricity that is sold or used for any other purpose (including on site use), or 4 hours after the EGU makes useful thermal energy (such as heat or steam) for industrial, commercial, heating, or cooling purposes (16 U.S.C. 796(18)(A) and 18 CFR 292.202(c)), whichever is earlier. Any fraction of an hour in which startup occurs constitutes a full hour of startup.

*Stationary combustion turbine* means all equipment, including but not limited to the turbine, the fuel, air, lubrication and exhaust gas systems, control systems (except emissions control equipment), and any ancillary components and sub-components comprising any simple cycle stationary combustion turbine, any regenerative/recuperative cycle stationary combustion turbine, the combustion turbine portion of any stationary cogeneration cycle combustion system, or the combustion turbine portion of any stationary combined cycle steam/electric generating system. Stationary means that the combustion turbine is not self propelled or intended to be propelled while performing its function. Stationary combustion turbines do not include turbines located at a research or laboratory facility, if research is conducted on the turbine itself and the turbine is not being used to power other applications at the research or laboratory facility.

*Steam generating unit* means any furnace, boiler, or other device used for combusting fuel for the purpose of producing steam (including fossil-fuel-fired steam generators associated with integrated gasification combined cycle gas turbines; nuclear steam generators are not included).

*Stoker* means a unit consisting of a mechanically operated fuel feeding mechanism, a stationary or moving grate to support the burning of fuel and admit undergrate air to the fuel, an overfire air system to complete combustion, and an ash discharge system. There are two general types of stokers: underfeed and overfeed. Overfeed stokers include mass feed and spreader stokers.

*Subbituminous coal* means coal that is classified as subbituminous A, B, or C according to ASTM Method D388–05, ''Standard Classification of Coals by Rank'' (incorporated by reference, see § 63.14).

*Unit designed for coal ≥8,300 Btu/lb subcategory* means any coal-fired EGU that is not a coal-fired EGU in the ''unit designed for low rank virgin coal'' subcategory.

*Unit designed for eastern bituminous coal refuse (EBCR) subcategory* means any existing (*i.e.*, construction was commenced on or before May 3, 2011) coal-fired EGU with a net summer capacity of no greater than 150 MW that is designed to burn and that is burning 75 percent or more (by heat input) eastern bituminous coal refuse on a 12-month rolling average basis.

*Unit designed for low rank virgin coal subcategory* means any coal-fired EGU that is designed to burn and that is burning nonagglomerating virgin coal having a calorific value (moist, mineral matter-free basis) of less than 19,305 kJ/kg (8,300 Btu/lb) that is constructed and operates at or near the mine that produces such coal.

*Unit designed to burn solid oil-derived fuel subcategory* means any oil-fired EGU that burns solid oil-derived fuel.

*Voluntary consensus standards or VCS* mean technical standards (e.g., materials specifications, test methods, sampling procedures, business practices) developed or adopted by one or more voluntary consensus bodies. The EPA/OAQPS has by precedent only used VCS that are written in English. Examples of VCS bodies are: American Society of Testing and Materials (ASTM), American Society of Mechanical Engineers (ASME), International Standards Organization (ISO), Standards Australia (AS), British Standards (BS), Canadian Standards (CSA), European Standard (EN or CEN) and German Engineering Standards (VDI). The types of standards that are not considered VCS are standards developed by: the U.S. states, e.g., California (CARB) and Texas (TCEQ); industry groups, such as American Petroleum Institute (API), Gas Processors Association (GPA), and Gas Research Institute (GRI); and other branches of the U.S.

government, e.g., Department of Defense (DOD) and Department of Transportation (DOT). This does not preclude EPA from using standards developed by groups that are not VCS bodies within an EPA rule. When this occurs, EPA has done searches and reviews for VCS equivalent to these non-VCS methods.

*Wet flue gas desulfurization technology*, or *wet FGD, or wet scrubber* means any add-on air pollution control device that is located downstream of the steam generating unit that mixes an aqueous stream or slurry with the exhaust gases from an EGU to control emissions of PM and/or to absorb and neutralize acid gases, such as $SO_2$ and HCl.

*Work practice standard* means any design, equipment, work practice, or operational standard, or combination thereof, which is promulgated pursuant to CAA section 112(h).

[77 FR 9464, Feb. 16, 2012, as amended at 77 FR 23405, Apr. 19, 2012; 78 FR 24087, Apr. 24, 2013; 79 FR 68792, Nov. 19, 2014; 81 FR 20189, Apr. 6, 2016; 85 FR 20850, Apr. 15, 2020; 85 FR 55763, Sept. 9, 2020]

TABLE 1 TO SUBPART UUUUU OF PART 63—EMISSION LIMITS FOR NEW OR RECONSTRUCTED EGUS

As stated in § 63.9991, you must comply with the following applicable emission limits:

| If your EGU is in this subcategory . . . | For the following pollutants . . . | You must meet the following emission limits and work practice standards . . . | Using these requirements, as appropriate (*e.g.,* specified sampling volume or test run duration) and limitations with the test methods in Table 5 to this Subpart . . . |
|---|---|---|---|
| 1. Coal-fired unit not low rank virgin coal. | a. Filterable particulate matter (PM). | 9.0E-2 lb/MWh [1] | Collect a minimum of 4 dscm per run. |
| | OR | OR | |
| | Total non-Hg HAP metals | 6.0E-2 lb/GWh | Collect a minimum of 4 dscm per run. |
| | OR | OR | |
| | Individual HAP metals: | | Collect a minimum of 3 dscm per run. |
| | Antimony (Sb) | 8.0E-3 lb/GWh. | |
| | Arsenic (As) | 3.0E-3 lb/GWh. | |
| | Beryllium (Be) | 6.0E-4 lb/GWh. | |
| | Cadmium (Cd) | 4.0E-4 lb/GWh. | |
| | Chromium (Cr) | 7.0E-3 lb/GWh. | |
| | Cobalt (Co) | 2.0E-3 lb/GWh. | |
| | Lead (Pb) | 2.0E-2 lb/GWh. | |
| | Manganese (Mn) | 4.0E-3 lb/GWh. | |
| | Nickel (Ni) | 4.0E-2 lb/GWh. | |
| | Selenium (Se) | 5.0E-2 lb/GWh. | |
| | b. Hydrogen chloride (HCl) | 1.0E-2 lb/MWh | For Method 26A at appendix A–8 to part 60 of this chapter, collect a minimum of 3 dscm per run. For ASTM D6348–03 [2] or Method 320 at appendix A to part 63 of this chapter, sample for a minimum of 1 hour. |
| | OR | | |
| | Sulfur dioxide ($SO_2$) [3] | 1.0 lb/MWh | $SO_2$ CEMS. |
| | c. Mercury (Hg) | 3.0E-3 lb/GWh | Hg CEMS or sorbent trap monitoring system only. |
| 2. Coal-fired units low rank virgin coal. | a. Filterable particulate matter (PM). | 9.0E-2 lb/MWh [1] | Collect a minimum of 4 dscm per run. |
| | OR | OR | |
| | Total non-Hg HAP metals | 6.0E-2 lb/GWh | Collect a minimum of 4 dscm per run. |
| | OR | OR | |
| | Individual HAP metals: | | Collect a minimum of 3 dscm per run. |
| | Antimony (Sb) | 8.0E-3 lb/GWh. | |
| | Arsenic (As) | 3.0E-3 lb/GWh. | |
| | Beryllium (Be) | 6.0E-4 lb/GWh. | |
| | Cadmium (Cd) | 4.0E-4 lb/GWh. | |
| | Chromium (Cr) | 7.0E-3 lb/GWh. | |
| | Cobalt (Co) | 2.0E-3 lb/GWh. | |
| | Lead (Pb) | 2.0E-2 lb/GWh. | |
| | Manganese (Mn) | 4.0E-3 lb/GWh. | |
| | Nickel (Ni) | 4.0E-2 lb/GWh. | |
| | Selenium (Se) | 5.0E-2 lb/GWh. | |

| If your EGU is in this subcategory . . . | For the following pollutants . . . | You must meet the following emission limits and work practice standards . . . | Using these requirements, as appropriate (*e.g.,* specified sampling volume or test run duration) and limitations with the test methods in Table 5 to this Subpart . . . |
|---|---|---|---|
| | b. Hydrogen chloride (HCl) | 1.0E-2 lb/MWh | For Method 26A, collect a minimum of 3 dscm per run For ASTM D6348–03[2] or Method 320, sample for a minimum of 1 hour. |
| | OR | | |
| | Sulfur dioxide ($SO_2$)[3] | 1.0 lb/MWh | $SO_2$ CEMS. |
| | c. Mercury (Hg) | 4.0E-2 lb/GWh | Hg CEMS or sorbent trap monitoring system only. |
| 3. IGCC unit | a. Filterable particulate matter (PM). | 7.0E-2 lb/MWh[4] 9.0E–2 lb/MWh[5]. | Collect a minimum of 1 dscm per run. |
| | OR | OR | |
| | Total non-Hg HAP metals | 4.0E-1 lb/GWh | Collect a minimum of 1 dscm per run. |
| | OR | OR | |
| | Individual HAP metals: | | Collect a minimum of 2 dscm per run. |
| | Antimony (Sb) | 2.0E-2 lb/GWh. | |
| | Arsenic (As) | 2.0E-2 lb/GWh. | |
| | Beryllium (Be) | 1.0E-3 lb/GWh. | |
| | Cadmium (Cd) | 2.0E-3 lb/GWh. | |
| | Chromium (Cr) | 4.0E-2 lb/GWh. | |
| | Cobalt (Co) | 4.0E-3 lb/GWh. | |
| | Lead (Pb) | 9.0E-3 lb/GWh. | |
| | Manganese (Mn) | 2.0E-2 lb/GWh. | |
| | Nickel (Ni) | 7.0E-2 lb/GWh. | |
| | Selenium (Se) | 3.0E-1 lb/GWh. | |
| | b. Hydrogen chloride (HCl) | 2.0E-3 lb/MWh | For Method 26A, collect a minimum of 1 dscm per run; for Method 26 at appendix A–8 to part 60 of this chapter, collect a minimum of 120 liters per run. For ASTM D6348–03[2] or Method 320, sample for a minimum of 1 hour. |
| | OR | | |
| | Sulfur dioxide ($SO_2$)[3] | 4.0E-1 lb/MWh | $SO_2$ CEMS. |
| | c. Mercury (Hg) | 3.0E-3 lb/GWh | Hg CEMS or sorbent trap monitoring system only. |
| 4. Liquid oil-fired unit—continental (excluding limited-use liquid oil-fired subcategory units). | a. Filterable particulate matter (PM). | 3.0E-1 lb/MWh[1] | Collect a minimum of 1 dscm per run. |
| | OR | OR | |
| | Total HAP metals | 2.0E-4 lb/MWh | Collect a minimum of 2 dscm per run. |
| | OR | OR | |
| | Individual HAP metals: | | Collect a minimum of 2 dscm per run. |
| | Antimony (Sb) | 1.0E-2 lb/GWh. | |
| | Arsenic (As) | 3.0E-3 lb/GWh. | |
| | Beryllium (Be) | 5.0E-4 lb/GWh. | |
| | Cadmium (Cd) | 2.0E-4 lb/GWh. | |
| | Chromium (Cr) | 2.0E-2 lb/GWh. | |
| | Cobalt (Co) | 3.0E-2 lb/GWh. | |
| | Lead (Pb) | 8.0E-3 lb/GWh. | |
| | Manganese (Mn) | 2.0E-2 lb/GWh. | |
| | Nickel (Ni) | 9.0E-2 lb/GWh. | |
| | Selenium (Se) | 2.0E-2 lb/GWh. | |
| | Mercury (Hg) | 1.0E-4 lb/GWh | For Method 30B at appendix A–8 to part 60 of this chapter sample volume determination (Section 8.2.4), the estimated Hg concentration should nominally be < ½ the standard. |
| | b. Hydrogen chloride (HCl) | 4.0E-4 lb/MWh | For Method 26A, collect a minimum of 3 dscm per run. For ASTM D6348–03[2] or Method 320, sample for a minimum of 1 hour. |
| | c. Hydrogen fluoride (HF) | 4.0E-4 lb/MWh | For Method 26A, collect a minimum of 3 dscm per run. For ASTM D6348–03[2] or Method 320, sample for a minimum of 1 hour. |
| 5. Liquid oil-fired unit—noncontinental (excluding limited-use liquid oil-fired subcategory units). | a. Filterable particulate matter (PM). | 2.0E–1 lb/MWh[1] | Collect a minimum of 1 dscm per run. |
| | OR | OR | |

| If your EGU is in this subcategory . . . | For the following pollutants . . . | You must meet the following emission limits and work practice standards . . . | Using these requirements, as appropriate (*e.g.,* specified sampling volume or test run duration) and limitations with the test methods in Table 5 to this Subpart . . . |
|---|---|---|---|
| | Total HAP metals | 7.0E-3 lb/MWh | Collect a minimum of 1 dscm per run. |
| | OR | OR | |
| | Individual HAP metals: | | Collect a minimum of 3 dscm per run. |
| | Antimony (Sb) | 8.0E-3 lb/GWh. | |
| | Arsenic (As) | 6.0E-2 lb/GWh. | |
| | Beryllium (Be) | 2.0E-3 lb/GWh. | |
| | Cadmium (Cd) | 2.0E-3 lb/GWh. | |
| | Chromium (Cr) | 2.0E-2 lb/GWh. | |
| | Cobalt (Co) | 3.0E-1 lb/GWh. | |
| | Lead (Pb) | 3.0E-2 lb/GWh. | |
| | Manganese (Mn) | 1.0E-1 lb/GWh. | |
| | Nickel (Ni) | 4.1E0 lb/GWh. | |
| | Selenium (Se) | 2.0E-2 lb/GWh. | |
| | Mercury (Hg) | 4.0E-4 lb/GWh | For Method 30B sample volume determination (Section 8.2.4), the estimated Hg concentration should nominally be < ½ the standard. |
| | b. Hydrogen chloride (HCl) | 2.0E-3 lb/MWh | For Method 26A, collect a minimum of 1 dscm per run;for Method 26, collect a minimum of 120 liters per run. For ASTM D6348–03[2] or Method 320, sample for a minimum of 1 hour. |
| | c. Hydrogen fluoride (HF) | 5.0E-4 lb/MWh | For Method 26A, collect a minimum of 3 dscm per run.For ASTM D6348–03[2] or Method 320, sample for a minimum of 1 hour. |
| 6. Solid oil-derived fuel-fired unit. | a. Filterable particulate matter (PM). | 3.0E-2 lb/MWh[1] | Collect a minimum of 1 dscm per run. |
| | OR | OR | |
| | Total non-Hg HAP metals | 6.0E-1 lb/GWh | Collect a minimum of 1 dscm per run. |
| | OR | OR | |
| | Individual HAP metals: | | Collect a minimum of 3 dscm per run. |
| | Antimony (Sb) | 8.0E–3 lb/GWh. | |
| | Arsenic (As) | 3.0E-3 lb/GWh. | |
| | Beryllium (Be) | 6.0E-4 lb/GWh. | |
| | Cadmium (Cd) | 7.0E-4 lb/GWh. | |
| | Chromium (Cr) | 6.0E-3 lb/GWh. | |
| | Cobalt (Co) | 2.0E-3 lb/GWh. | |
| | Lead (Pb) | 2.0E-2 lb/GWh. | |
| | Manganese (Mn) | 7.0E-3 lb/GWh. | |
| | Nickel (Ni) | 4.0E-2 lb/GWh. | |
| | Selenium (Se) | 6.0E-3 lb/GWh. | |
| | b. Hydrogen chloride (HCl) | 4.0E-4 lb/MWh | For Method 26A, collect a minimum of 3 dscm per run. For ASTM D6348–03[2] or Method 320, sample for a minimum of 1 hour. |
| | OR | | |
| | Sulfur dioxide ($SO_2$)[3] | 1.0 lb/MWh | $SO_2$ CEMS. |
| | c. Mercury (Hg) | 2.0E-3 lb/GWh | Hg CEMS or Sorbent trap monitoring system only. |

[1] Gross output.
[2] Incorporated by reference, see § 63.14.
[3] You may not use the alternate $SO_2$ limit if your EGU does not have some form of FGD system (or, in the case of IGCC EGUs, some other acid gas removal system either upstream or downstream of the combined cycle block) and $SO_2$ CEMS installed.
[4] Duct burners on syngas; gross output.
[5] Duct burners on natural gas; gross output.

[81 FR 20190, Apr. 6, 2016]

## TABLE 2 TO SUBPART UUUUU OF PART 63—EMISSION LIMITS FOR EXISTING EGUS

As stated in § 63.9991, you must comply with the following applicable emission limits:[1]

| If your EGU is in this subcategory . . . | For the following pollutants . . . | You must meet the following emission limits and work practice standards . . . | Using these requirements, as appropriate (*e.g.,* specified sampling volume or test run duration) and limitations with the test methods in Table 5 to this Subpart . . . |
|---|---|---|---|
| 1. Coal-fired unit not low rank virgin coal. | a. Filterable particulate matter (PM). | 3.0E–2 lb/MMBtu or 3.0E–1 lb/MWh [2]. | Collect a minimum of 1 dscm per run. |
| | OR | OR | |
| | Total non-Hg HAP metals. | 5.0E–5 lb/MMBtu or 5.0E–1 lb/GWh. | Collect a minimum of 1 dscm per run. |
| | OR | OR | |
| | Individual HAP metals: | ..... | Collect a minimum of 3 dscm per run. |
| | Antimony (Sb) ..... | 8.0E–1 lb/TBtu or 8.0E–3 lb/GWh. | |
| | Arsenic (As) ..... | 1.1E0 lb/TBtu or 2.0E–2 lb/GWh. | |
| | Beryllium (Be) ..... | 2.0E–1 lb/TBtu or 2.0E–3 lb/GWh. | |
| | Cadmium (Cd) ..... | 3.0E–1 lb/TBtu or 3.0E–3 lb/GWh. | |
| | Chromium (Cr) ..... | 2.8E0 lb/TBtu or 3.0E–2 lb/GWh. | |
| | Cobalt (Co) ..... | 8.0E–1 lb/TBtu or 8.0E–3 lb/GWh. | |
| | Lead (Pb) ..... | 1.2E0 lb/TBtu or 2.0E–2 lb/GWh. | |
| | Manganese (Mn) ..... | 4.0E0 lb/TBtu or 5.0E–2 lb/GWh. | |
| | Nickel (Ni) ..... | 3.5E0 lb/TBtu or 4.0E–2 lb/GWh. | |
| | Selenium (Se) ..... | 5.0E0 lb/TBtu or 6.0E–2 lb/GWh. | |
| | b. Hydrogen chloride (HCl). | 2.0E–3 lb/MMBtu or 2.0E–2 lb/MWh. | For Method 26A at appendix A–8 to part 60 of this chapter, collect a minimum of 0.75 dscm per run; for Method 26, collect a minimum of 120 liters per run. For ASTM D6348–03 [3] or Method 320 at appendix A to part 63 of this chapter, sample for a minimum of 1 hour. |
| | OR. | | |
| | Sulfur dioxide ($SO_2$) [4] ... | 2.0E–1 lb/MMBtu or 1.5E0 lb/MWh. | $SO_2$ CEMS. |
| | c. Mercury (Hg) ..... | 1.2E0 lb/TBtu or 1.3E–2 lb/GWh. | LEE Testing for 30 days with a sampling period consistent with that given in section 5.2.1 of appendix A to this subpart per Method 30B at appendix A–8 to part 60 of this chapter run or Hg CEMS or sorbent trap monitoring system only. |
| | | OR | |
| | | 1.0E0 lb/TBtu or 1.1E–2 lb/GWh. | LEE Testing for 90 days with a sampling period consistent with that given in section 5.2.1 of appendix A to this subpart per Method 30B run or Hg CEMS or sorbent trap monitoring system only. |
| 2. Coal-fired unit low rank virgin coal | a. Filterable particulate matter (PM). | 3.0E–2 lb/MMBtu or 3.0E–1 lb/MWh [2]. | Collect a minimum of 1 dscm per run. |
| | OR | OR | |
| | Total non-Hg HAP metals. | 5.0E–5 lb/MMBtu or 5.0E–1 lb/GWh. | Collect a minimum of 1 dscm per run. |
| | OR | OR | |
| | Individual HAP metals: | ..... | Collect a minimum of 3 dscm per run. |
| | Antimony (Sb) ..... | 8.0E–1 lb/TBtu or 8.0E–3 lb/GWh. | |
| | Arsenic (As) ..... | 1.1E0 lb/TBtu or 2.0E–2 lb/GWh. | |
| | Beryllium (Be) ..... | 2.0E–1 lb/TBtu or 2.0E–3 lb/GWh. | |
| | Cadmium (Cd) ..... | 3.0E–1 lb/TBtu or 3.0E–3 lb/GWh. | |

| If your EGU is in this subcategory . . . | For the following pollutants . . . | You must meet the following emission limits and work practice standards . . . | Using these requirements, as appropriate (*e.g.,* specified sampling volume or test run duration) and limitations with the test methods in Table 5 to this Subpart . . . |
|---|---|---|---|
| | Chromium (Cr) | 2.8E0 lb/TBtu or 3.0E–2 lb/GWh. | |
| | Cobalt (Co) | 8.0E–1 lb/TBtu or 8.0E–3 lb/GWh. | |
| | Lead (Pb) | 1.2E0 lb/TBtu or 2.0E–2 lb/GWh. | |
| | Manganese (Mn) | 4.0E0 lb/TBtu or 5.0E–2 lb/GWh. | |
| | Nickel (Ni) | 3.5E0 lb/TBtu or 4.0E–2 lb/GWh. | |
| | Selenium (Se) | 5.0E0 lb/TBtu or 6.0E–2 lb/GWh. | |
| | b. Hydrogen chloride (HCl). | 2.0E–3 lb/MMBtu or 2.0E–2 lb/MWh. | For Method 26A, collect a minimum of 0.75 dscm per run; for Method 26 at appendix A–8 to part 60 of this chapter, collect a minimum of 120 liters per run. For ASTM D6348–03[3] or Method 320, sample for a minimum of 1 hour. |
| | OR | | |
| | Sulfur dioxide ($SO_2$)[4] | 2.0E–1 lb/MMBtu or 1.5E0 lb/MWh. | $SO_2$ CEMS. |
| | c. Mercury (Hg) | 4.0E0 lb/TBtu or 4.0E–2 lb/GWh. | LEE Testing for 30 days with a sampling period consistent with that given in section 5.2.1 of appendix A to this subpart per Method 30B run or Hg CEMS or sorbent trap monitoring system only. |
| 3. IGCC unit | a. Filterable particulate matter (PM). | 4.0E–2 lb/MMBtu or 4.0E–1 lb/MWh[2]. | Collect a minimum of 1 dscm per run. |
| | OR | OR | |
| | Total non-Hg HAP metals. | 6.0E–5 lb/MMBtu or 5.0E–1 lb/GWh. | Collect a minimum of 1 dscm per run. |
| | OR | OR | |
| | Individual HAP metals: | ..... | Collect a minimum of 2 dscm per run. |
| | Antimony (Sb) | 1.4E0 lb/TBtu or 2.0E–2 lb/GWh. | |
| | Arsenic (As) | 1.5E0 lb/TBtu or 2.0E–2 lb/GWh. | |
| | Beryllium (Be) | 1.0E–1 lb/TBtu or 1.0E–3 lb/GWh. | |
| | Cadmium (Cd) | 1.5E–1 lb/TBtu or 2.0E–3 lb/GWh. | |
| | Chromium (Cr) | 2.9E0 lb/TBtu or 3.0E–2 lb/GWh. | |
| | Cobalt (Co) | 1.2E0 lb/TBtu or 2.0E–2 lb/GWh. | |
| | Lead (Pb) | 1.9E+2 lb/TBtu or 1.8E0 lb/GWh. | |
| | Manganese (Mn) | 2.5E0 lb/TBtu or 3.0E–2 lb/GWh. | |
| | Nickel (Ni) | 6.5E0 lb/TBtu or 7.0E–2 lb/GWh. | |
| | Selenium (Se) | 2.2E+1 lb/TBtu or 3.0E–1 lb/GWh. | |
| | b. Hydrogen chloride (HCl). | 5.0E–4 lb/MMBtu or 5.0E–3 lb/MWh. | For Method 26A, collect a minimum of 1 dscm per run; for Method 26, collect a minimum of 120 liters per run. For ASTM D6348–03[3] or Method320, sample for a minimum of 1 hour. |
| | c. Mercury (Hg) | 2.5E0 lb/TBtu or 3.0E–2 lb/GWh. | LEE Testing for 30 days with a sampling period consistent with that given in section 5.2.1 of appendix A to this subpart per Method 30B run or Hg CEMS or sorbent trap monitoring system only. |

| If your EGU is in this subcategory . . . | For the following pollutants . . . | You must meet the following emission limits and work practice standards . . . | Using these requirements, as appropriate (*e.g.,* specified sampling volume or test run duration) and limitations with the test methods in Table 5 to this Subpart . . . |
|---|---|---|---|
| 4. Liquid oil-fired unit—continental (excluding limited-use liquid oil-fired subcategory units). | a. Filterable particulate matter (PM). | 3.0E–2 lb/MMBtu or 3.0E–1 lb/MWh [2]. | Collect a minimum of 1 dscm per run. |
| | OR | OR | |
| | Total HAP metals | 8.0E–4 lb/MMBtu or 8.0E–3 lb/MWh. | Collect a minimum of 1 dscm per run. |
| | OR | OR | |
| | Individual HAP metals: | | Collect a minimum of 1 dscm per run. |
| | Antimony (Sb) | 1.3E+1 lb/TBtu or 2.0E–1 lb/GWh. | |
| | Arsenic (As) | 2.8E0 lb/TBtu or 3.0E–2 lb/GWh. | |
| | Beryllium (Be) | 2.0E–1 lb/TBtu or 2.0E–3 lb/GWh. | |
| | Cadmium (Cd) | 3.0E–1 lb/TBtu or 2.0E–3 lb/GWh. | |
| | Chromium (Cr) | 5.5E0 lb/TBtu or 6.0E–2 lb/GWh. | |
| | Cobalt (Co) | 2.1E+1 lb/TBtu or 3.0E–1 lb/GWh. | |
| | Lead (Pb) | 8.1E0 lb/TBtu or 8.0E–2 lb/GWh. | |
| | Manganese (Mn) | 2.2E+1 lb/TBtu or 3.0E–1 lb/GWh. | |
| | Nickel (Ni) | 1.1E+2 lb/TBtu or 1.1E0 lb/GWh. | |
| | Selenium (Se) | 3.3E0 lb/TBtu or 4.0E–2 lb/GWh. | |
| | Mercury (Hg) | 2.0E–1 lb/TBtu or 2.0E–3 lb/GWh. | For Method 30B sample volume determination (Section 8.2.4), the estimated Hg concentration should nominally be $<\frac{1}{2}$ the standard. |
| | b. Hydrogen chloride (HCl). | 2.0E–3 lb/MMBtu or 1.0E–2 lb/MWh. | For Method 26A, collect a minimum of 1 dscm per run; for Method 26, collect a minimum of 120 liters per run. For ASTM D6348–03 [3] or Method 320, sample for a minimum of 1 hour. |
| | c. Hydrogen fluoride (HF). | 4.0E–4 lb/MMBtu or 4.0E–3 lb/MWh. | For Method 26A, collect a minimum of 1 dscm per run; for Method 26, collect a minimum of 120 liters per run. For ASTM D6348–03 [3] or Method 320, sample for a minimum of 1 hour. |
| 5. Liquid oil-fired unit—non-continental (excluding limited-use liquid oil-fired subcategory units). | a. Filterable particulate matter (PM). | 3.0E–2 lb/MMBtu or 3.0E–1 lb/MWh [2]. | Collect a minimum of 1 dscm per run. |
| | OR | OR | |
| | Total HAP metals | 6.0E–4 lb/MMBtu or 7.0E–3 lb/MWh. | Collect a minimum of 1 dscm per run. |
| | OR | OR | |
| | Individual HAP metals: | | Collect a minimum of 2 dscm per run. |
| | Antimony (Sb) | 2.2E0 lb/TBtu or 2.0E–2 lb/GWh. | |
| | Arsenic (As) | 4.3E0 lb/TBtu or 8.0E–2 lb/GWh. | |
| | Beryllium (Be) | 6.0E–1 lb/TBtu or 3.0E–3 lb/GWh. | |
| | Cadmium (Cd) | 3.0E–1 lb/TBtu or 3.0E–3 lb/GWh. | |
| | Chromium (Cr) | 3.1E+1 lb/TBtu or 3.0E–1 lb/GWh. | |
| | Cobalt (Co) | 1.1E+2 lb/TBtu or 1.4E0 lb/GWh. | |
| | Lead (Pb) | 4.9E0 lb/TBtu or 8.0E–2 lb/GWh. | |
| | Manganese (Mn) | 2.0E+1 lb/TBtu or 3.0E–1 lb/GWh. | |

| If your EGU is in this subcategory . . . | For the following pollutants . . . | You must meet the following emission limits and work practice standards . . . | Using these requirements, as appropriate (*e.g.,* specified sampling volume or test run duration) and limitations with the test methods in Table 5 to this Subpart . . . |
|---|---|---|---|
| | Nickel (Ni) | 4.7E+2 lb/TBtu or 4.1E0 lb/GWh. | |
| | Selenium (Se) | 9.8E0 lb/TBtu or 2.0E–1 lb/GWh. | |
| | Mercury (Hg) | 4.0E–2 lb/TBtu or 4.0E–4 lb/GWh. | For Method 30B sample volume determination (Section 8.2.4), the estimated Hg concentration should nominally be $<\frac{1}{2}$ the standard. |
| | b. Hydrogen chloride (HCl). | 2.0E–4 lb/MMBtu or 2.0E–3 lb/MWh. | For Method 26A, collect a minimum of 1 dscm per run; for Method 26, collect a minimum of 120 liters per run. For ASTM D6348–03[3] or Method 320, sample for a minimum of 2 hours. |
| | c. Hydrogen fluoride (HF). | 6.0E–5 lb/MMBtu or 5.0E–4 lb/MWh. | For Method 26A, collect a minimum of 3 dscm per run. For ASTM D6348–03[3] or Method 320, sample for a minimum of 2 hours. |
| 6. Solid oil-derived fuel-fired unit | a. Filterable particulate matter (PM). | 8.0E–3 lb/MMBtu or 9.0E–2 lb/MWh[2]. | Collect a minimum of 1 dscm per run. |
| | OR | OR | |
| | Total non-Hg HAP metals. | 4.0E–5 lb/MMBtu or 6.0E–1 lb/GWh. | Collect a minimum of 1 dscm per run. |
| | OR | OR | |
| | Individual HAP metals: | ..... | Collect a minimum of 3 dscm per run. |
| | Antimony (Sb) | 8.0E–1 lb/TBtu or 7.0E–3 lb/GWh. | |
| | Arsenic (As) | 3.0E–1 lb/TBtu or 5.0E–3 lb/GWh. | |
| | Beryllium (Be) | 6.0E–2 lb/TBtu or 5.0E–4 lb/GWh. | |
| | Cadmium (Cd) | 3.0E–1 lb/TBtu or 4.0E–3 lb/GWh. | |
| | Chromium (Cr) | 8.0E–1 lb/TBtu or 2.0E–2 lb/GWh. | |
| | Cobalt (Co) | 1.1E0 lb/TBtu or 2.0E–2 lb/GWh. | |
| | Lead (Pb) | 8.0E–1 lb/TBtu or 2.0E–2 lb/GWh. | |
| | Manganese (Mn) | 2.3E0 lb/TBtu or 4.0E–2 lb/GWh. | |
| | Nickel (Ni) | 9.0E0 lb/TBtu or 2.0E–1 lb/GWh. | |
| | Selenium (Se) | 1.2E0 lb/Tbtu or 2.0E–2 lb/GWh. | |
| | b. Hydrogen chloride (HCl). | 5.0E–3 lb/MMBtu or 8.0E–2 lb/MWh. | For Method 26A, collect a minimum of 0.75 dscm per run; for Method 26, collect a minimum of 120 liters per run. For ASTM D6348–03[3] or Method 320, sample for a minimum of 1 hour. |
| | OR | | |
| | Sulfur dioxide ($SO_2$)[4] | 3.0E–1 lb/MMBtu or 2.0E0 lb/MWh. | $SO_2$ CEMS. |
| | c. Mercury (Hg) | 2.0E–1 lb/TBtu or 2.0E–3 lb/GWh. | LEE Testing for 30 days with a sampling period consistent with that given in section 5.2.1 of appendix A to this subpart per Method 30B run or Hg CEMS or sorbent trap monitoring system only. |
| 7. Eastern Bituminous Coal Refuse (EBCR)-fired unit. | a. Filterable particulate matter (PM). | 3.0E–2 lb/MMBtu or 3.0E–1 lb/MWh[2]. | Collect a minimum of 1 dscm per run. |
| | OR | OR | |
| | Total non-Hg HAP metals. | 5.0E–5 lb/MMBtu or 5.0E–1 lb/GWh. | Collect a minimum of 1 dscm per run. |
| | OR | OR | |
| | Individual HAP metals: | ..... | Collect a minimum of 3 dscm per run. |

| If your EGU is in this subcategory . . . | For the following pollutants . . . | You must meet the following emission limits and work practice standards . . . | Using these requirements, as appropriate (*e.g.,* specified sampling volume or test run duration) and limitations with the test methods in Table 5 to this Subpart . . . |
|---|---|---|---|
| | Antimony (Sb) | 8.0E–1 lb/TBtu or 8.0E–3 lb/GWh. | |
| | Arsenic (As) | 1.1E0 lb/TBtu or 2.0E–2 lb/GWh. | |
| | Beryllium (Be) | 2.0E–1 lb/TBtu or 2.0E–3 lb/GWh. | |
| | Cadmium (Cd) | 3.0E–1 lb/TBtu or 3.0E–3 lb/GWh. | |
| | Chromium (Cr) | 2.8E0 lb/TBtu or 3.0E–2 lb/GWh. | |
| | Cobalt (Co) | 8.0E–1 lb/TBtu or 8.0E–3 lb/GWh. | |
| | Lead (Pb) | 1.2E0 lb/TBtu or 2.0E–2 lb/GWh. | |
| | Manganese (Mn) | 4.0E0 lb/TBtu or 5.0E–2 lb/GWh. | |
| | Nickel (Ni) | 3.5E0 lb/TBtu or 4.0E–2 lb/GWh. | |
| | Selenium (Se) | 5.0E0 lb/TBtu or 6.0E–2 lb/GWh. | |
| | b. Hydrogen chloride (HCl). | 4.0E–2 lb/MMBtu or 4.0E–1 lb/MWh | For Method 26A at appendix A–8 to part 60 of this chapter, collect a minimum of 0.75 dscm per run; for Method 26, collect a minimum of 120 liters per run. For ASTM D6348–03[3] or Method 320 at appendix A to part 63 of this chapter, sample for a minimum of 1 hour. |
| | OR | | |
| | Sulfur dioxide ($SO_2$)[4] | 6E–1 lb/MMBtu or 9E0 lb/MWh. | $SO_2$ CEMS. |
| | c. Mercury (Hg) | 1.2E0 lb/TBtu or 1.3E–2 lb/GWh. | LEE Testing for 30 days with a sampling period consistent with that given in section 5.2.1 of appendix A to this subpart per Method 30B at appendix A–8 to part 60 of this chapter run or Hg CEMS or sorbent trap monitoring system only. |
| | | OR | |
| | | 1.0E0 lb/TBtu or 1.1E–2 lb/GWh. | LEE Testing for 90 days with a sampling period consistent with that given in section 5.2.1 of appendix A to this subpart per Method 30B run or Hg CEMS or sorbent trap monitoring system only. |

[1] For LEE emissions testing for total PM, total HAP metals, individual HAP metals, HCl, and HF, the required minimum sampling volume must be increased nominally by a factor of 2.
[2] Gross output.
[3] Incorporated by reference, *see* § 63.14.
[4] You may not use the alternate $SO_2$ limit if your EGU does not have some form of FGD system and $SO_2$ CEMS installed.

[85 FR 20850, Apr. 15, 2020]

## TABLE 3 TO SUBPART UUUUU OF PART 63—WORK PRACTICE STANDARDS

As stated in §§ 63.9991, you must comply with the following applicable work practice standards:

| If your EGU is . . . | You must meet the following . . . |
|---|---|
| 1. An existing EGU | Conduct a tune-up of the EGU burner and combustion controls at least each 36 calendar months, or each 48 calendar months if neural network combustion optimization software is employed, as specified in § 63.10021(e). |
| 2. A new or reconstructed EGU. | Conduct a tune-up of the EGU burner and combustion controls at least each 36 calendar months, or each 48 calendar months if neural network combustion optimization software is employed, as specified in § 63.10021(e). |

| If your EGU is . . . | You must meet the following . . . |
|---|---|
| 3. A coal-fired, liquid oil-fired (excluding limited-use liquid oil-fired sub-category units), or solid oil-derived fuel-fired EGU during startup. | a. You have the option of complying using either of the following work practice standards:<br>(1) If you choose to comply using paragraph (1) of the definition of ''startup'' in § 63.10042, you must operate all CMS during startup. Startup means either the first-ever firing of fuel in a boiler for the purpose of producing electricity, or the firing of fuel in a boiler after a shutdown event for any purpose. Startup ends when any of the steam from the boiler is used to generate electricity for sale over the grid or for any other purpose (including on site use). For startup of a unit, you must use clean fuels as defined in § 63.10042 for ignition. Once you convert to firing coal, residual oil, or solid oil-derived fuel, you must engage all of the applicable control technologies except dry scrubber and SCR. You must start your dry scrubber and SCR systems, if present, appropriately to comply with relevant standards applicable during normal operation. You must comply with all applicable emissions limits at all times except for periods that meet the applicable definitions of startup and shutdown in this subpart. You must keep records during startup periods. You must provide reports concerning activities and startup periods, as specified in § 63.10011(g) and § 63.10021(h) and (i). If you elect to use paragraph (2) of the definition of startup in 40 CFR 63.10042, you must report the applicable information in 40 CFR 63.10031(c)(5) concerning start-up periods as follows: For startup periods that occur on or prior to December 31, 2023, in PDF files in the semiannual compliance report; for startup periods that occur on or after January 1, 2024, quarterly, in PDF files, according to 40 CFR 63.10031(i).<br>(2) If you choose to comply using paragraph (2) of the definition of ''startup'' in § 63.10042, you must operate all CMS during startup. You must also collect appropriate data, and you must calculate the pollutant emission rate for each hour of startup.<br>For startup of an EGU, you must use one or a combination of the clean fuels defined in § 63.10042 to the maximum extent possible, taking into account considerations such as boiler or control device integrity, throughout the startup period. You must have sufficient clean fuel capacity to engage and operate your PM control device within one hour of adding coal, residual oil, or solid oil-derived fuel to the unit. You must meet the startup period work practice requirements as identified in § 63.10020(e).<br>Once you start firing coal, residual oil, or solid oil-derived fuel, you must vent emissions to the main stack(s). You must comply with the applicable emission limits beginning with the hour after startup ends. You must engage and operate your PM control(s) within 1 hour of first firing of coal, residual oil, or solid oil-derived fuel.<br>You must start all other applicable control devices as expeditiously as possible, considering safety and manufacturer/supplier recommendations, but, in any case, when necessary to comply with other standards made applicable to the EGU by a permit limit or a rule other than this subpart that require operation of the control devices.<br>b. Relative to the syngas not fired in the combustion turbine of an IGCC EGU during startup, you must either: (1) Flare the syngas, or (2) route the syngas to duct burners, which may need to be installed, and route the flue gas from the duct burners to the heat recovery steam generator.<br>c. If you choose to use just one set of sorbent traps to demonstrate compliance with the applicable Hg emission limit, you must comply with the limit at all times; otherwise, you must comply with the applicable emission limit at all times except for startup and shutdown periods.<br>d. You must collect monitoring data during startup periods, as specified in § 63.10020(a) and (e). You must keep records during startup periods, as provided in §§ 63.10021(h) and 63.10032. You must provide reports concerning activities and startup periods, as specified in §§ 63.10011(g), 63.10021(i), and 63.10031. If you elect to use paragraph (2) of the definition of startup in 40 CFR 63.10042, you must report the applicable information in 40 CFR 63.10031(c)(5) concerning start-up periods as follows: For startup periods that occur on or prior to December 31, 2023, in PDF files in the semiannual compliance report; for startup periods that occur on or after January 1, 2024, quarterly, in PDF files, according to 40 CFR 63.10031(i). |
| 4. A coal-fired, liquid oil-fired (excluding limited-use liquid oil-fired sub-category units), or solid oil-derived fuel-fired EGU during shutdown. | You must operate all CMS during shutdown. You must also collect appropriate data, and you must calculate the pollutant emission rate for each hour of shutdown for those pollutants for which a CMS is used.<br>While firing coal, residual oil, or solid oil-derived fuel during shutdown, you must vent emissions to the main stack(s) and operate all applicable control devices and continue to operate those control devices after the cessation of coal, residual oil, or solid oil-derived fuel being fed into the EGU and for as long as possible thereafter considering operational and safety concerns. In any case, you must operate your controls when necessary to comply with other standards made applicable to the EGU by a permit limit or a rule other than this subpart and that require operation of the control devices.<br>If, in addition to the fuel used prior to initiation of shutdown, another fuel must be used to support the shutdown process, that additional fuel must be one or a combination of the clean fuels defined in § 63.10042 and must be used to the maximum extent possible, taking into account considerations such as not compromising boiler or control device integrity.<br>Relative to the syngas not fired in the combustion turbine of an IGCC EGU during shutdown, you must either: (1) Flare the syngas, or (2) route the syngas to duct burners, which may need to be installed, and route the flue gas from the duct burners to the heat recovery steam generator. |

| If your EGU is . . . | You must meet the following . . . |
|---|---|
| | You must comply with all applicable emission limits at all times except during startup periods and shutdown periods at which time you must meet this work practice. You must collect monitoring data during shutdown periods, as specified in § 63.10020(a). You must keep records during shutdown periods, as provided in §§ 63.10032 and 63.10021(h). Any fraction of an hour in which shutdown occurs constitutes a full hour of shutdown. You must provide reports concerning activities and shutdown periods, as specified in §§ 63.10011(g), 63.10021(i), and 63.10031. If you elect to use paragraph (2) of the definition of startup in 40 CFR 63.10042, you must report the applicable information in 40 CFR 63.10031(c)(5) concerning shutdown periods as follows: For shutdown periods that occur on or prior to December 31, 2023, in PDF files in the semiannual compliance report; for shutdown periods that occur on or after January 1, 2024, quarterly, in PDF files, according to 40 CFR 63.10031(i). |

[81 FR 20196, Apr. 6, 2016, as amended at 85 FR 55763, Sept. 9, 2020]

## TABLE 4 TO SUBPART UUUUU OF PART 63—OPERATING LIMITS FOR EGUS

As stated in § 63.9991, you must comply with the applicable operating limits:

| If you demonstrate compliance using . . . | You must meet these operating limits . . . |
|---|---|
| PM CPMS ..... | Maintain the 30-boiler operating day rolling average PM CPMS output determined in accordance with the requirements of § 63.10023(b)(2) and obtained during the most recent performance test run demonstrating compliance with the filterable PM, total non-mercury HAP metals (total HAP metals, for liquid oil-fired units), or individual non-mercury HAP metals (individual HAP metals including Hg, for liquid oil-fired units) emissions limitation(s). |

[81 FR 20197, Apr. 6, 2016]

## TABLE 5 TO SUBPART UUUUU OF PART 63—PERFORMANCE TESTING REQUIREMENTS

As stated in § 63.10007, you must comply with the following requirements for performance testing for existing, new or reconstructed affected sources: [1]

| To conduct a performance test for the following pollutant . . . | Using . . . | You must perform the following activities, as applicable to your input- or output-based emission limit . . . | Using . . .[2] |
|---|---|---|---|
| 1. Filterable Particulate matter (PM). | Emissions Testing | a. Select sampling ports location and the number of traverse points. | Method 1 at appendix A–1 to part 60 of this chapter. |
| | | b. Determine velocity and volumetric flow-rate of the stack gas. | Method 2, 2A, 2C, 2F, 2G or 2H at appendix A–1 or A–2 to part 60 of this chapter. |
| | | c. Determine oxygen and carbon dioxide concentrations of the stack gas. | Method 3A or 3B at appendix A–2 to part 60 of this chapter, or ANSI/ASME PTC 19.10–1981.[3] |
| | | d. Measure the moisture content of the stack gas. | Method 4 at appendix A–3 to part 60 of this chapter. |
| | | e. Measure the filterable PM concentration. | Methods 5 and 5I at appendix A–3 to part 60 of this chapter. For positive pressure fabric filters, Method 5D at appendix A–3 to part 60 of this chapter for filterable PM emissions. Note that the Method 5 or 5I front half temperature shall be 160° ±14 °C (320° ±25 °F). |
| | | f. Convert emissions concentration to lb/MMBtu or lb/MWh emissions rates. | Method 19 F-factor methodology at appendix A–7 to part 60 of this chapter, or calculate using mass emissions rate and gross output data (see § 63.10007(e)). |
| | OR | OR | |

[1] Regarding emissions data collected during periods of startup or shutdown, see §§ 63.10020(b) and (c) and 63.10021(h).

| To conduct a performance test for the following pollutant . . . | Using . . . | You must perform the following activities, as applicable to your input- or output-based emission limit . . . | Using . . .[2] |
|---|---|---|---|
| | PM CEMS ..... | a. Install, certify, operate, and maintain the PM CEMS. | Performance Specification 11 at appendix B to part 60 of this chapter and Procedure 2 at appendix F to part 60 of this chapter. |
| | | b. Install, certify, operate, and maintain the diluent gas, flow rate, and/or moisture monitoring systems. | Part 75 of this chapter and § 63.10010(a), (b), (c), and (d). |
| | | c. Convert hourly emissions concentrations to 30 boiler operating day rolling average lb/MMBtu or lb/MWh emissions rates. | Method 19 F-factor methodology at appendix A–7 to part 60 of this chapter, or calculate using mass emissions rate and gross output data (see § 63.10007(e)). |
| 2. Total or individual non-Hg HAP metals. | Emissions Testing | a. Select sampling ports location and the number of traverse points. | Method 1 at appendix A–1 to part 60 of this chapter. |
| | | b. Determine velocity and volumetric flow-rate of the stack gas. | Method 2, 2A, 2C, 2F, 2G or 2H at appendix A–1 or A–2 to part 60 of this chapter. |
| | | c. Determine oxygen and carbon dioxide concentrations of the stack gas. | Method 3A or 3B at appendix A–2 to part 60 of this chapter, or ANSI/ASME PTC 19.10–1981.[3] |
| | | d. Measure the moisture content of the stack gas. | Method 4 at appendix A–3 to part 60 of this chapter. |
| | | e. Measure the HAP metals emissions concentrations and determine each individual HAP metals emissions concentration, as well as the total filterable HAP metals emissions concentration and total HAP metals emissions concentration. | Method 29 at appendix A–8 to part 60 of this chapter. For liquid oil-fired units, Hg is included in HAP metals and you may use Method 29, Method 30B at appendix A–8 to part 60 of this chapter; for Method 29, you must report the front half and back half results separately. When using Method 29, report metals matrix spike and recovery levels. |
| | | f. Convert emissions concentrations (individual HAP metals, total filterable HAP metals, and total HAP metals) to lb/MMBtu or lb/MWh emissions rates. | Method 19 F-factor methodology at appendix A–7 to part 60 of this chapter, or calculate using mass emissions rate and gross output data (see § 63.10007(e)). |
| 3. Hydrogen chloride (HCl) and hydrogen fluoride (HF). | Emissions Testing | a. Select sampling ports location and the number of traverse points. | Method 1 at appendix A–1 to part 60 of this chapter. |
| | | b. Determine velocity and volumetric flow-rate of the stack gas. | Method 2, 2A, 2C, 2F, 2G or 2H at appendix A–1 or A–2 to part 60 of this chapter. |
| | | c. Determine oxygen and carbon dioxide concentrations of the stack gas. | Method 3A or 3B at appendix A–2 to part 60 of this chapter, or ANSI/ASME PTC 19.10–1981.[3] |
| | | d. Measure the moisture content of the stack gas. | Method 4 at appendix A–3 to part 60 of this chapter. |
| | | e. Measure the HCl and HF emissions concentrations. | Method 26 or Method 26A at appendix A–8 to part 60 of this chapter or Method 320 at appendix A to part 63 of this chapter or ASTM D6348–03[3] with<br>(1) the following conditions when using ASTM D6348–03:<br>(A) The test plan preparation and implementation in the Annexes to ASTM D6348–03, Sections A1 through A8 are mandatory;<br>(B) For ASTM D6348–03 Annex A5 (Analyte Spiking Technique), the percent (%) R must be determined for each target analyte (see Equation A5.5);<br>(C) For the ASTM D6348–03 test data to be acceptable for a target analyte, %R must be 70% ≥R ≤130%; and |

3.e.1(D) The %R value for each compound must be reported in the test report and all field measurements corrected with the calculated %R value for that compound using the following equation:

$$\text{Reported Result} = \frac{(\text{Measured Concentration in Stack})}{\%R} x\ 100$$

and

| To conduct a performance test for the following pollutant . . . (cont'd) | Using . . . (cont'd) | You must perform the following activities, as applicable to your input- or output-based emission limit . . . (cont'd) | Using . . .[2] (cont'd) |
|---|---|---|---|
| | | | (2) spiking levels nominally no greater than two times the level corresponding to the applicable emission limit. Method 26A must be used if there are entrained water droplets in the exhaust stream. |
| | | f. Convert emissions concentration to lb/MMBtu or lb/MWh emissions rates. | Method 19 F-factor methodology at appendix A–7 to part 60 of this chapter, or calculate using mass emissions rate and gross output data (see § 63.10007(e)). |
| | OR HCl and/or HF CEMS. | OR a. Install, certify, operate, and maintain the HCl or HF CEMS. | Appendix B of this subpart. |
| | | b. Install, certify, operate, and maintain the diluent gas, flow rate, and/or moisture monitoring systems. | Part 75 of this chapter and § 63.10010(a), (b), (c), and (d). |
| | | c. Convert hourly emissions concentrations to 30 boiler operating day rolling average lb/MMBtu or lb/MWh emissions rates. | Method 19 F-factor methodology at appendix A–7 to part 60 of this chapter, or calculate using mass emissions rate and gross output data (see § 63.10007(e)). |
| 4. Mercury (Hg) ..... | Emissions Testing | a. Select sampling ports location and the number of traverse points. | Method 1 at appendix A–1 to part 60 of this chapter or Method 30B at Appendix A–8 for Method 30B point selection. |
| | | b. Determine velocity and volumetric flow-rate of the stack gas. | Method 2, 2A, 2C, 2F, 2G or 2H at appendix A–1 or A–2 to part 60 of this chapter. |
| | | c. Determine oxygen and carbon dioxide concentrations of the stack gas. | Method 3A or 3B at appendix A–1 to part 60 of this chapter, or ANSI/ASME PTC 19.10–1981.[3] |
| | | d. Measure the moisture content of the stack gas. | Method 4 at appendix A–3 to part 60 of this chapter. |
| | | e. Measure the Hg emission concentration. | Method 30B at appendix A–8 to part 60 of this chapter, ASTM D6784,[3] or Method 29 at appendix A–8 to part 60 of this chapter; for Method 29, you must report the front half and back half results separately. |
| | | f. Convert emissions concentration to lb/TBtu or lb/GWh emission rates. | Method 19 F-factor methodology at appendix A–7 to part 60 of this chapter, or calculate using mass emissions rate and gross output data (see § 63.10007(e)). |
| | OR Hg CEMS ..... | OR a. Install, certify, operate, and maintain the CEMS. | Sections 3.2.1 and 5.1 of appendix A of this subpart. |
| | | b. Install, certify, operate, and maintain the diluent gas, flow rate, and/or moisture monitoring systems. | Part 75 of this chapter and § 63.10010(a), (b), (c), and (d). |
| | | c. Convert hourly emissions concentrations to 30 boiler operating day rolling average lb/TBtu or lb/GWh emissions rates. | Section 6 of appendix A to this subpart. |
| | OR | OR | |

| To conduct a performance test for the following pollutant . . . (cont'd) | Using . . . (cont'd) | You must perform the following activities, as applicable to your input- or output-based emission limit . . . (cont'd) | Using . . .[2] (cont'd) |
|---|---|---|---|
| | Sorbent trap monitoring system. | a. Install, certify, operate, and maintain the sorbent trap monitoring system. | Sections 3.2.2 and 5.2 of appendix A to this subpart. |
| | | b. Install, operate, and maintain the diluent gas, flow rate, and/or moisture monitoring systems. | Part 75 of this chapter and § 63.10010(a), (b), (c), and (d). |
| | | c. Convert emissions concentrations to 30 boiler operating day rolling average lb/TBtu or lb/GWh emissions rates. | Section 6 of appendix A to this subpart. |
| | OR | OR | |
| | LEE testing ..... | a. Select sampling ports location and the number of traverse points. | Single point located at the 10% centroidal area of the duct at a port location per Method 1 at appendix A–1 to part 60 of this chapter or Method 30B at Appendix A–8 for Method 30B point selection. |
| | | b. Determine velocity and volumetric flow-rate of the stack gas. | Method 2, 2A, 2C, 2F, 2G, or 2H at appendix A–1 or A–2 to part 60 of this chapter or flow monitoring system certified per appendix A of this subpart. |
| | | c. Determine oxygen and carbon dioxide concentrations of the stack gas. | Method 3A or 3B at appendix A–1 to part 60 of this chapter, or ANSI/ASME PTC 19.10–1981,[3] or diluent gas monitoring systems certified according to part 75 of this chapter. |
| | | d. Measure the moisture content of the stack gas. | Method 4 at appendix A–3 to part 60 of this chapter, or moisture monitoring systems certified according to part 75 of this chapter. |
| | | e. Measure the Hg emission concentration. | Method 30B at appendix A–8 to part 60 of this chapter; perform a 30 operating day test, with a maximum of 10 operating days per run (*i.e.,* per pair of sorbent traps) or sorbent trap monitoring system or Hg CEMS certified per appendix A of this subpart. |
| | | f. Convert emissions concentrations from the LEE test to lb/TBtu or lb/GWh emissions rates. | Method 19 F-factor methodology at appendix A–7 to part 60 of this chapter, or calculate using mass emissions rate and gross output data (see § 63.10007(e)). |
| | | g. Convert average lb/TBtu or lb/GWh Hg emission rate to lb/year, if you are attempting to meet the 29.0 lb/year threshold. | Potential maximum annual heat input in TBtu or potential maximum electricity generated in GWh. |
| 5. Sulfur dioxide ($SO_2$) ..... | $SO_2$ CEMS ..... | a. Install, certify, operate, and maintain the CEMS. | Part 75 of this chapter and § 63.10010(a) and (f). |
| | | b. Install, operate, and maintain the diluent gas, flow rate, and/or moisture monitoring systems. | Part 75 of this chapter and § 63.10010(a), (b), (c), and (d). |
| | | c. Convert hourly emissions concentrations to 30 boiler operating day rolling average lb/MMBtu or lb/MWh emissions rates. | Method 19 F-factor methodology at appendix A–7 to part 60 of this chapter, or calculate using mass emissions rate and gross output data (see § 63.10007(e)). |

[2] See Tables 1 and 2 to this subpart for required sample volumes and/or sampling run times.
[3] Incorporated by reference, see § 63.14.

[83 FR 56727, Nov. 14, 2018]

## TABLE 6 TO SUBPART UUUUU OF PART 63—ESTABLISHING PM CPMS OPERATING LIMITS

As stated in § 63.10007, you must comply with the following requirements for establishing operating limits:

| If you have an applicable emission limit for . . . | And you choose to establish PM CPMS operating limits, you must . . . | And . . . | Using . . . | According to the following procedures . . . |
|---|---|---|---|---|
| Filterable Particulate matter (PM), total non-mercury HAP metals, individual non-mercury HAP metals, total HAP metals, or individual HAP metals for an EGU. | Install, certify, maintain, and operate a PM CPMS for monitoring emissions discharged to the atmosphere according to § 63.10010(h)(1). | Establish a site-specific operating limit in units of PM CPMS output signal (*e.g.,* milliamps, mg/acm, or other raw signal). | Data from the PM CPMS and the PM or HAP metals performance tests. | 1. Collect PM CPMS output data during the entire period of the performance tests.<br>2. Record the average hourly PM CPMS output for each test run in the performance test.<br>3. Determine the PM CPMS operating limit in accordance with the requirements of § 63.10023(b)(2) from data obtained during the performance test demonstrating compliance with the filterable PM or HAP metals emissions limitations. |

[81 FR 20201, Apr. 6, 2016]

## TABLE 7 TO SUBPART UUUUU OF PART 63—DEMONSTRATING CONTINUOUS COMPLIANCE

As stated in § 63.10021, you must show continuous compliance with the emission limitations for affected sources according to the following:

| If you use one of the following to meet applicable emissions limits, operating limits, or work practice standards . . . | You demonstrate continuous compliance by . . . |
|---|---|
| 1. CEMS to measure filterable PM, $SO_2$, HCl, HF, or Hg emissions, or using a sorbent trap monitoring system to measure Hg. | Calculating the 30- (or 90-) boiler operating day rolling arithmetic average emissions rate in units of the applicable emissions standard basis at the end of each boiler operating day using all of the quality assured hourly average CEMS or sorbent trap data for the previous 30- (or 90-) boiler operating days, excluding data recorded during periods of startup or shutdown. |
| 2. PM CPMS to measure compliance with a parametric operating limit. | Calculating the 30- (or 90-) boiler operating day rolling arithmetic average of all of the quality assured hourly average PM CPMS output data (e.g., milliamps, PM concentration, raw data signal) collected for all operating hours for the previous 30- (or 90-) boiler operating days, excluding data recorded during periods of startup or shutdown. |
| 3. Site-specific monitoring using CMS for liquid oil-fired EGUs for HCl and HF emission limit monitoring. | If applicable, by conducting the monitoring in accordance with an approved site-specific monitoring plan. |
| 4. Quarterly performance testing for coal-fired, solid oil derived fired, or liquid oil-fired EGUs to measure compliance with one or more non-PM (or its alternative emission limits) applicable emissions limit in Table 1 or 2, or PM (or its alternative emission limits) applicable emissions limit in Table 2. | Calculating the results of the testing in units of the applicable emissions standard. |
| 5. Conducting periodic performance tune-ups of your EGU(s). | Conducting periodic performance tune-ups of your EGU(s), as specified in § 63.10021(e). |
| 6. Work practice standards for coal-fired, liquid oil-fired, or solid oil-derived fuel-fired EGUs during startup. | Operating in accordance with Table 3. |
| 7. Work practice standards for coal-fired, liquid oil-fired, or solid oil-derived fuel-fired EGUs during shutdown. | Operating in accordance with Table 3. |

[78 FR 24092, Apr. 24, 2013]

TABLE 8 TO SUBPART UUUUU OF PART 63—REPORTING REQUIREMENTS

[In accordance with 40 CFR 63.10031, you must meet the following reporting requirements, as they apply to your compliance strategy]

| You must submit the following reports . . . |
|---|
| 1. The electronic reports required under 40 CFR 63.10031 (a)(1), if you continuously monitor Hg emissions. |
| 2. The electronic reports required under 40 CFR 63.10031 (a)(2), if you continuously monitor HCl and/or HF emissions. |
| Where applicable, these reports are due no later than 30 days after the end of each calendar quarter. |
| 3. The electronic reports required under 40 CFR 63.10031(a)(3), if you continuously monitor PM emissions. |
| Reporting of hourly PM emissions data using ECMPS shall begin with the first operating hour after: January 1, 2024, or the hour of completion of the initial PM CEMS correlation test, whichever is later. |
| Where applicable, these reports are due no later than 30 days after the end of each calendar quarter. |
| 4. The electronic reports required under 40 CFR 63.10031(a)(4), if you elect to use a PM CPMS. |
| Reporting of hourly PM CPMS response data using ECMPS shall begin with the first operating hour after January 1, 2024, or the first operating hour after completion of the initial performance stack test that establishes the operating limit for the PM CPMS, whichever is later. |
| Where applicable, these reports are due no later than 30 days after the end of each calendar quarter. |
| 5. The electronic reports required under 40 CFR 63.10031(a)(5), if you continuously monitor $SO_2$ emissions. |
| Where applicable, these reports are due no later than 30 days after the end of each calendar quarter. |
| 6. PDF reports for all performance stack tests completed prior to January 1, 2024 (including 30- or 90-boiler operating day Hg LEE test reports and PM test reports to set operating limits for PM CPMS), according to the introductory text of 40 CFR 63.10031(f) and 40 CFR 63.10031(f)(6). |
| For each test, submit the PDF report no later than 60 days after the date on which testing is completed. |
| For a PM test that is used to set an operating limit for a PM CPMS, the report must also include the information in 40 CFR 63.10023(b)(2)(vi). |
| For each performance stack test completed on or after January 1, 2024, submit the test results in the relevant quarterly compliance report under 40 CFR 63.10031(g), together with the applicable reference method information in sections 17 through 31 of appendix E to this subpart. |
| 7. PDF reports for all RATAs of Hg, HCl, HF, and/or $SO_2$ monitoring systems completed prior to January 1, 2024, and for correlation tests, RRAs and/or RCAs of PM CEMS completed prior to January 1, 2024, according to 40 CFR 63.10031(f)(1) and (6). |
| For each test, submit the PDF report no later than 60 days after the date on which testing is completed. |
| For each $SO_2$ or Hg system RATA completed on or after January 1, 2024, submit the electronic test summary required by appendix A to this subpart or part 75 of this chapter (as applicable) together with the applicable reference method information in sections 17 through 30 of appendix E to this subpart, either prior to or concurrent with the relevant quarterly emissions report. |
| For each HCl or HF system RATA, and for each correlation test, RRA, and RCA of a PM CEMS completed on or after January 1, 2024, submit the electronic test summary in accordance with section 11.4 of appendix B to this subpart or section 7.2.4 of appendix C to this part, as applicable, together with the applicable reference method information in sections 17 through 30 of appendix E to this subpart. |
| 8. Quarterly reports, in PDF files, that include all 30-boiler operating day rolling averages in the reporting period derived from your PM CEMS, approved HAP metals CEMS, and/or PM CPMS, according to 40 CFR 63.10031(f)(2) and (6). These reports are due no later than 60 days after the end of each calendar quarter. |
| The final quarterly rolling averages report in PDF files shall cover the fourth calendar quarter of 2023. |
| Starting with the first quarter of 2024, you must report all 30-boiler operating day rolling averages for PM CEMS, approved HAP metals CEMS, PM CPMS, Hg CEMS, Hg sorbent trap systems, HCl CEMS, HF CEMS, and/or $SO_2$ CEMS (or 90-boiler operating day rolling averages for Hg systems), in XML format, in the quarterly compliance reports required under 40 CFR 63.10031(g). |
| If your EGU or common stack is in an averaging plan, each quarterly compliance report must identify the EGUs in the plan and include all of the 30- or 90- group boiler operating day WAERs for the averaging group. |
| The quarterly compliance reports must be submitted no later than 60 days after the end of each calendar quarter. |
| 9. The semiannual compliance reports described in 40 CFR 63.10031(c) and (d), in PDF files, according to 40 CFR 63.10031(f)(4) and (6). The due dates for these reports are specified in 40 CFR 63.10031(b). |
| The final semiannual compliance report shall cover the period from July 1, 2023, through December 31, 2023. |
| 10. Notifications of compliance status, in PDF files, according to 40 CFR 63.10031(f)(4) and (6) until December 31, 2023, and according to 40 CFR 63.10031(h) thereafter. |
| 11. Quarterly electronic compliance reports, in accordance with 40 CFR 63.10031(g), starting with a report for the first calendar quarter of 2024. The reports must be in XML format and must include the applicable data elements in sections 2 through 13 of appendix E to this subpart. |
| These reports are due no later than 60 days after the end of each calendar quarter. |
| 12. Quarterly reports, in PDF files, that include the applicable information in 40 CFR 63.10031(c)(5)(ii) and 40 CFR 63.10020(e) pertaining to startup and shutdown events, starting with a report for the first calendar quarter of 2024, if you have elected to use paragraph 2 of the definition of startup in 40 CFR 63.10042 (see 40 CFR 63.10031(i)). |
| These PDF reports shall be submitted no later than 60 days after the end of each calendar quarter, along with the quarterly compliance reports required under 40 CFR 63.10031(g). |
| 13. A test report for the PS 11 correlation test of your PM CEMS, in accordance with 40 CFR 63.10031(j). |
| If, prior to November 9, 2020, you have begun using a certified PM CEMS to demonstrate compliance with this subpart, use the ECMPS Client Tool to submit the report, in a PDF file, no later than 60 days after that date. |
| For correlation tests completed on or after November 9, 2020, but prior to January 1, 2024, submit the report, in a PDF file, no later than 60 days after the date on which the test is completed. |
| For correlation tests completed on or after January 1, 2024, submit the test results electronically, according to section 7.2.4 of appendix C to this subpart, together with the applicable reference method data in sections 17 through 31 of appendix E to this subpart. |
| 14. Quarterly reports that include the QA/QC activities for your PM CPMS or approved HAP metals CEMS (as applicable), in PDF files, according to 40 CFR 63.10031(k). |

[In accordance with 40 CFR 63.10031, you must meet the following reporting requirements, as they apply to your compliance strategy]

| You must submit the following reports . . . |
|---|
| The first report shall cover the first calendar quarter of 2024, if the PM CPMS or HAP metals CEMS is in use during that quarter. Otherwise, reporting begins with the first calendar quarter in which the PM CPMS or HAP metals CEMS is used to demonstrate compliance.<br>These reports are due no later than 60 days after the end of each calendar quarter. |

[85 FR 55764, Sept. 9, 2020]

## TABLE 9 TO SUBPART UUUUU OF PART 63—APPLICABILITY OF GENERAL PROVISIONS TO SUBPART UUUUU

As stated in §63.10040, you must comply with the applicable General Provisions according to the following:

| Citation | Subject | Applies to subpart UUUUU |
|---|---|---|
| §63.1 | Applicability | Yes. |
| §63.2 | Definitions | Yes. Additional terms defined in §63.10042. |
| §63.3 | Units and Abbreviations | Yes. |
| §63.4 | Prohibited Activities and Circumvention. | Yes. |
| §63.5 | Preconstruction Review and Notification Requirements. | Yes. |
| §63.6(a), (b)(1) through (5), (b)(7), (c), (f)(2) and (3), (h)(2) through (9), (i), (j). | Compliance with Standards and Maintenance Requirements. | Yes. |
| §63.6(e)(1)(i) | General Duty to minimize emissions. | No. See §63.10000(b) for general duty requirement. |
| §63.6(e)(1)(ii) | Requirement to correct malfunctions ASAP. | No. |
| §63.6(e)(3) | SSM Plan requirements | No. |
| §63.6(f)(1) | SSM exemption | No. |
| §63.6(h)(1) | SSM exemption | No. |
| §63.6(g) | Compliance with Standards and Maintenance Requirements, Use of an alternative non-opacity emission standard. | Yes. See §§63.10011(g)(4) and 63.10021(h)(4) for additional requirements. |
| §63.7(e)(1) | Performance testing | No. See §63.10007. |
| §63.8 | Monitoring Requirements | Yes. |
| §63.8(c)(1)(i) | General duty to minimize emissions and CMS operation. | No. See §63.10000(b) for general duty requirement. |
| §63.8(c)(1)(iii) | Requirement to develop SSM Plan for CMS. | No. |
| §63.8(d)(3) | Written procedures for CMS | Yes, except for last sentence, which refers to an SSM plan. SSM plans are not required. |
| §63.9 | Notification Requirements | Yes, except (1) for the 60-day notification prior to conducting a performance test in §63.9(e); instead use a 30-day notification period per §63.10030(d), (2) the notification of the CMS performance evaluation in §63.9(g)(1) is limited to RATAs, and (3) the information required per §63.9(h)(2)(i); instead provide the applicable information in §63.10030(e)(1) through (8), for the initial notification of compliance status, only. |
| §63.10(a), (b)(1), (c), (d)(1) and (2), (e), and (f). | Recordkeeping and Reporting Requirements. | Yes, except for the requirements to submit written reports under §63.10(e)(3)(v). |
| §63.10(b)(2)(i) | Recordkeeping of occurrence and duration of startups and shutdowns. | No. |
| §63.10(b)(2)(ii) | Recordkeeping of malfunctions | No. See §63.10001 for recordkeeping of (1) occurrence and duration and (2) actions taken during malfunction. |
| §63.10(b)(2)(iii) | Maintenance records | Yes. |
| §63.10(b)(2)(iv) | Actions taken to minimize emissions during SSM. | No. |
| §63.10(b)(2)(v) | Actions taken to minimize emissions during SSM. | No. |
| §63.10(b)(2)(vi) | Recordkeeping for CMS malfunctions. | Yes. |
| §63.10(b)(2)(vii) through (ix) | Other CMS requirements | Yes. |

| Citation | Subject | Applies to subpart UUUUU |
|---|---|---|
| § 63.10(b)(3) and (d)(3) through (5). | | No. |
| § 63.10(c)(7) | Additional recordkeeping requirements for CMS — identifying exceedances and excess emissions. | Applies only through December 31, 2023. |
| § 63.10(c)(8) | Additional recordkeeping requirements for CMS—identifying exceedances and excess emissions. | Applies only through December 31, 2023. |
| § 63.10(c)(10) | Recording nature and cause of malfunctions. | No. See § 63.10032(g) and (h) for malfunctions recordkeeping requirements. |
| § 63.10(c)(11) | Recording corrective actions | No. See § 63.10032(g) and (h) for malfunctions recordkeeping requirements. |
| § 63.10(c)(15) | Use of SSM Plan | No. |
| § 63.10(d)(5) | SSM reports | No. See § 63.10021(h) and (i) for malfunction reporting requirements. |
| § 63.10(e)(3)(v) and (vi) | Excess emissions and CMS performance reports. | Applies only through December 31, 2023. |
| § 63.11 | Control Device Requirements | No. |
| § 63.12 | State Authority and Delegation | Yes. |
| §§ 63.13 through 63.16 | Addresses, Incorporation by Reference, Availability of Information, Performance Track Provisions. | Yes. |
| §§ 63.1(a)(5),(a)(7) through (9), (b)(2), (c)(3) and (4), (d), 63.6(b)(6), (c)(3) and (4), (d), (e)(2), (e)(3)(ii), (h)(3), (h)(5)(iv), 63.8(a)(3), 63.9(b)(3), (h)(4), 63.10(c)(2) through (4), (c)(9).. | Reserved | No. |

[81 FR 20202, Apr. 6, 2016, as amended at 85 FR 55765, Sept. 9, 2020]

## Appendix A to Subpart UUUUU of Part 63—Hg Monitoring Provisions

### 1. General Provisions

1.1 *Applicability*. These monitoring provisions apply to the measurement of total vapor phase mercury (Hg) in emissions from electric utility steam generating units, using either a mercury continuous emission monitoring system (Hg CEMS) or a sorbent trap monitoring system. The Hg CEMS or sorbent trap monitoring system must be capable of measuring the total vapor phase mercury in units of the applicable emissions standard (e.g., lb/TBtu or lb/GWh), regardless of speciation.

1.2 *Initial Certification and Recertification Procedures*. The owner or operator of an affected unit that uses a Hg CEMS or a sorbent trap monitoring system together with other necessary monitoring components to account for Hg emissions in units of the applicable emissions standard shall comply with the initial certification and recertification procedures in section 4 of this appendix.

1.3 *Quality Assurance and Quality Control Requirements*. The owner or operator of an affected unit that uses a Hg CEMS or a sorbent trap monitoring system together with other necessary monitoring components to account for Hg emissions in units of the applicable emissions standard shall meet the applicable quality assurance requirements in section 5 of this appendix.

1.4 *Missing Data Procedures*. The owner or operator of an affected unit is not required to substitute for missing data from Hg CEMS or sorbent trap monitoring systems. Any process operating hour for which quality-assured Hg concentration data are not obtained is counted as an hour of monitoring system downtime.

### 2. Monitoring of Hg Emissions

2.1 *Monitoring System Installation Requirements*. Flue gases from the affected units under this subpart vent to the atmosphere through a variety of exhaust configurations including single stacks, common stack configurations, and multiple stack configurations. For each of these configurations, § 63.10010(a) specifies the appropriate location(s) at which to install continuous monitoring systems (CMS). These CMS installation provisions apply to the Hg CEMS, sorbent trap monitoring systems, and other continuous monitoring systems that provide data for the Hg emissions calculations in section 6.2 of this appendix.

2.2 *Primary and Backup Monitoring Systems*. In the electronic monitoring plan described in section 7.1.1.2.1 of this appendix,

you must designate a primary Hg CEMS or sorbent trap monitoring system. The primary system must be used to report hourly Hg concentration values when the system is able to provide quality-assured data, *i.e.*, when the system is ''in control''. However, to increase data availability in the event of a primary monitoring system outage, you may install, operate, maintain, and calibrate backup monitoring systems, as follows:

2.2.1 *Redundant Backup Systems*. A redundant backup monitoring system may be either a separate Hg CEMS with its own probe, sample interface, and analyzer, or a separate sorbent trap monitoring system. A redundant backup system is one that is permanently installed at the unit or stack location, and is kept on ''hot standby'' in case the primary monitoring system is unable to provide quality-assured data. A redundant backup system must be represented as a unique monitoring system in the electronic monitoring plan. Each redundant backup monitoring system must be certified according to the applicable provisions in section 4 of this appendix and must meet the applicable on-going QA requirements in section 5 of this appendix.

2.2.2 *Non-redundant Backup Monitoring Systems*. A non-redundant backup monitoring system is a separate Hg CEMS or sorbent trap system that has been certified at a particular unit or stack location, but is not permanently installed at that location. Rather, the system is kept on ''cold standby'' and may be reinstalled in the event of a primary monitoring system outage. A non-redundant backup monitoring system must be represented as a unique monitoring system in the electronic monitoring plan. Non-redundant backup Hg CEMS must complete the same certification tests as the primary monitoring system, with one exception. The 7-day calibration error test is not required for a non-redundant backup Hg CEMS. Except as otherwise provided in section 2.2.4.5 of this appendix, a non-redundant backup monitoring system may only be used for 720 hours per year at a particular unit or stack location.

2.2.3 *Temporary Like-kind Replacement Analyzers*. When a primary Hg analyzer needs repair or maintenance, you may temporarily install a like-kind replacement analyzer, to minimize data loss. Except as otherwise provided in section 2.2.4.5 of this appendix, a temporary like-kind replacement analyzer may only be used for 720 hours per year at a particular unit or stack location. The analyzer must be represented as a component of the primary Hg CEMS, and must be assigned a 3-character component ID number, beginning with the prefix ''LK''.

2.2.4 *Quality Assurance Requirements for Non-redundant Backup Monitoring Systems and Temporary Like-kind Replacement Analyzers*. To quality-assure the data from non-redundant backup Hg monitoring systems and temporary like-kind replacement Hg analyzers, the following provisions apply:

2.2.4.1 When a certified non-redundant backup sorbent trap monitoring system is brought into service, you must follow the procedures for routine day-to-day operation of the system, in accordance with Performance Specification (PS) 12B in appendix B to part 60 of this chapter.

2.2.4.2 When a certified non-redundant backup Hg CEMS or a temporary like-kind replacement Hg analyzer is brought into service, a calibration error test and a linearity check must be performed and passed. A single point system integrity check is also required, unless a NIST-traceable source of oxidized Hg was used for the calibration error test.

2.2.4.3 Each non-redundant backup Hg CEMS or temporary like-kind replacement Hg analyzer shall comply with all required daily, weekly, and quarterly quality-assurance test requirements in section 5 of this appendix, for as long as the system or analyzer remains in service.

2.2.4.4 For the routine, on-going quality-assurance of a non-redundant backup Hg monitoring system, a relative accuracy test audit (RATA) must be performed and passed at least once every 8 calendar quarters at the unit or stack location(s) where the system will be used.

2.2.4.5 To use a non-redundant backup Hg monitoring system or a temporary like-kind replacement analyzer for more than 720 hours per year at a particular unit or stack location, a RATA must first be performed and passed at that location.

## 3. Mercury Emissions Measurement Methods

The following definitions, equipment specifications, procedures, and performance criteria are applicable to the measurement of vapor-phase Hg emissions from electric utility steam generating units, under relatively low-dust conditions (*i.e.*, sampling in the stack or duct after all pollution control devices). The analyte measured by these procedures and specifications is total vapor-phase Hg in the flue gas, which represents the sum of elemental Hg ($Hg^0$, CAS Number 7439–97–6) and oxidized forms of Hg.

3.1 *Definitions*.

3.1.1 *Mercury Continuous Emission Monitoring System or Hg CEMS* means all of the equipment used to continuously determine the total vapor phase Hg concentration. The measurement system may include the following major subsystems: sample acquisition, $Hg^{+2}$ to $Hg^0$ converter, sample transport, sample conditioning, flow control/gas manifold, gas analyzer, and data acquisition and handling system (DAHS). Hg CEMS may be nominally real-time or time-integrated, batch sampling systems that sample the gas

on an intermittent basis and concentrate on a collection medium before intermittent analysis and reporting.

3.1.2 *Sorbent Trap Monitoring System* means the equipment required to monitor Hg emissions continuously by using paired sorbent traps containing iodated charcoal (IC) or other suitable sorbent medium. The monitoring system consists of a probe, paired sorbent traps, an umbilical line, moisture removal components, an airtight sample pump, a gas flow meter, and an automated data acquisition and handling system. The system samples the stack gas at a constant proportional rate relative to the stack gas volumetric flow rate. The sampling is a batch process. The average Hg concentration in the stack gas for the sampling period is determined, in units of micrograms per dry standard cubic meter (μg/dscm), based on the sample volume measured by the gas flow meter and the mass of Hg collected in the sorbent traps.

3.1.3 *NIST* means the National Institute of Standards and Technology, located in Gaithersburg, Maryland.

3.1.4 *NIST–Traceable Elemental Hg Standards* means either: compressed gas cylinders having known concentrations of elemental Hg, which have been prepared according to the ''EPA Traceability Protocol for Assay and Certification of Gaseous Calibration Standards''; or calibration gases having known concentrations of elemental Hg, produced by a generator that meets the performance requirements of the ''EPA Traceability Protocol for Qualification and Certification of Elemental Mercury Gas Generators'' or an interim version of that protocol.

3.1.5 *NIST–Traceable Source of Oxidized Hg* means a generator that is capable of providing known concentrations of vapor phase mercuric chloride ($HgCl_2$), and that meets the performance requirements of the ''EPA Traceability Protocol for Qualification and Certification of Mercuric Chloride Gas Generators'' or an interim version of that protocol.

3.1.6 *Calibration Gas* means a NIST-traceable gas standard containing a known concentration of elemental or oxidized Hg that is produced and certified in accordance with an EPA traceability protocol.

3.1.7 *Span Value* means a conservatively high estimate of the Hg concentrations to be measured by a CEMS. The span value of a Hg CEMS should be set to approximately twice the concentration corresponding to the emission standard, rounded off as appropriate (see section 3.2.1.4.2 of this appendix).

3.1.8 *Zero-Level Gas* means calibration gas containing a Hg concentration that is below the level detectable by the Hg gas analyzer in use.

3.1.9 *Low-Level Gas* means calibration gas with a concentration that is 20 to 30 percent of the span value.

3.1.10 *Mid-Level Gas* means calibration gas with a concentration that is 50 to 60 percent of the span value.

3.1.11 *High-Level Gas* means calibration gas with a concentration that is 80 to 100 percent of the span value.

3.1.12 *Calibration Error Test* means a test designed to assess the ability of a Hg CEMS to measure the concentrations of calibration gases accurately. A zero-level gas and an upscale gas are required for this test. For the upscale gas, either a mid-level gas or a high-level gas may be used, and the gas may either be an elemental or oxidized Hg standard.

3.1.13 *Linearity Check* means a test designed to determine whether the response of a Hg analyzer is linear across its measurement range. Three elemental Hg calibration gas standards (*i.e.*, low, mid, and high-level gases) are required for this test.

3.1.14 *System Integrity Check* means a test designed to assess the transport and measurement of oxidized Hg by a Hg CEMS. Oxidized Hg standards are used for this test. For a three-level system integrity check, low, mid, and high-level calibration gases are required. For a single-level check, either a mid-level gas or a high-level gas may be used.

3.1.15 *Cycle Time Test* means a test designed to measure the amount of time it takes for a Hg CEMS, while operating normally, to respond to a known step change in gas concentration. For this test, a zero gas and a high-level gas are required. The high-level gas may be either an elemental or an oxidized Hg standard.

3.1.16 *Relative Accuracy Test Audit* or *RATA* means a series of nine or more test runs, directly comparing readings from a Hg CEMS or sorbent trap monitoring system to measurements made with a reference stack test method. The relative accuracy (RA) of the monitoring system is expressed as the absolute mean difference between the monitoring system and reference method measurements plus the absolute value of the 2.5 percent error confidence coefficient, divided by the mean value of the reference method measurements.

3.1.17 *Unit Operating Hour* means a clock hour in which a unit combusts any fuel, either for part of the hour or for the entire hour.

3.1.18 *Stack Operating Hour* means a clock hour in which gases flow through a particular monitored stack or duct (either for part of the hour or for the entire hour), while the associated unit(s) are combusting fuel.

3.1.19 *Operating Day* means a calendar day in which a source combusts any fuel.

3.1.20 *Quality Assurance (QA) Operating Quarter* means a calendar quarter in which

there are at least 168 unit or stack operating hours (as defined in this section).

3.1.21 *Grace Period* means a specified number of unit or stack operating hours after the deadline for a required quality-assurance test of a continuous monitor has passed, in which the test may be performed and passed without loss of data.

3.2 *Continuous Monitoring Methods.*

3.2.1 *Hg CEMS.* A typical Hg CEMS is shown in Figure A–1. The CEMS in Figure A–1 is a dilution extractive system, which measures Hg concentration on a wet basis, and is the most commonly-used type of Hg CEMS. Other system designs may be used, provided that the CEMS meets the performance specifications in section 4.1.1 of this appendix.

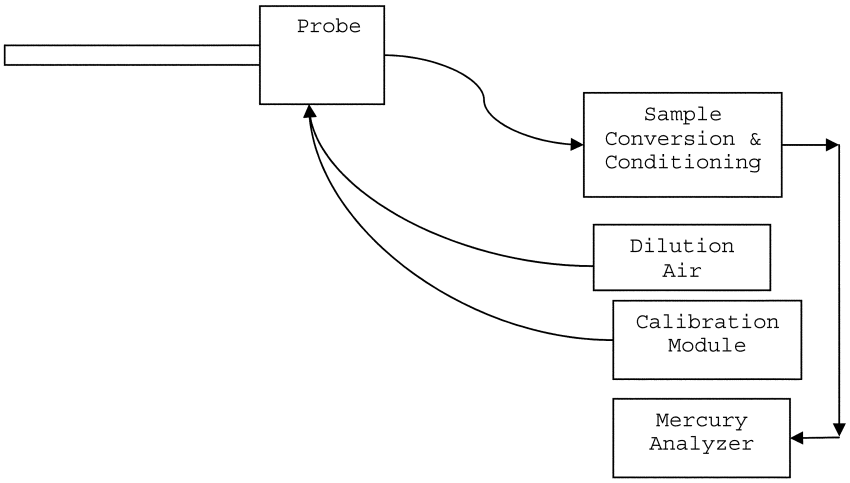


FIGURE A-1. TYPICAL MERCURY CEMS

3.2.1.1 *Equipment Specifications.*

3.2.1.1.1 *Materials of Construction.* All wetted sampling system components, including probe components prior to the point at which the calibration gas is introduced, must be chemically inert to all Hg species. Materials such as perfluoroalkoxy (PFA) Teflon™, quartz, and treated stainless steel (SS) are examples of such materials.

3.2.1.1.2 *Temperature Considerations.* All system components prior to the $Hg^{+2}$ to $Hg^{0}$ converter must be maintained at a sample temperature above the acid gas dew point.

3.2.1.1.3 *Measurement System Components.*

3.2.1.1.3.1 *Sample Probe.* The probe must be made of the appropriate materials as noted in paragraph 3.2.1.1.1 of this section, heated when necessary, as described in paragraph 3.2.1.1.3.4 of this section, and configured with ports for introduction of calibration gases.

3.2.1.1.3.2 *Filter or Other Particulate Removal Device.* The filter or other particulate removal device is part of the measurement system, must be made of appropriate materials, as noted in paragraph 3.2.1.1.1 of this section, and must be included in all system tests.

3.2.1.1.3.3 *Sample Line.* The sample line that connects the probe to the converter, conditioning system, and analyzer must be made of appropriate materials, as noted in paragraph 3.2.1.1.1 of this section.

3.2.1.1.3.4 *Conditioning Equipment.* For wet basis systems, such as the one shown in Figure A–1, the sample must be kept above its dew point either by: heating the sample line and all sample transport components up to the inlet of the analyzer (and, for hot-wet extractive systems, also heating the analyzer); or diluting the sample prior to analysis using a dilution probe system. The components required for these operations are considered to be conditioning equipment. For dry basis measurements, a condenser, dryer or other suitable device is required to remove moisture continuously from the sample gas, and any equipment needed to heat the probe or sample line to avoid condensation prior to the moisture removal component is also required.

3.2.1.1.3.5 *Sampling Pump*. A pump is needed to push or pull the sample gas through the system at a flow rate sufficient to minimize the response time of the measurement system. If a mechanical sample pump is used and its surfaces are in contact with the sample gas prior to detection, the pump must be leak free and must be constructed of a material that is non-reactive to the gas being sampled (see paragraph 3.2.1.1.1 of this section). For dilution-type measurement systems, such as the system shown in Figure A–1, an ejector pump (eductor) may be used to create a sufficient vacuum that sample gas will be drawn through a critical orifice at a constant rate. The ejector pump must be constructed of any material that is non-reactive to the gas being sampled.

3.2.1.1.3.6 *Calibration Gas System(s)*. Design and equip each Hg CEMS to permit the introduction of known concentrations of elemental Hg and $HgCl_2$ separately, at a point preceding the sample extraction filtration system, such that the entire measurement system can be checked. The calibration gas system(s) must be designed so that the flow rate exceeds the sampling system flow requirements and that the gas is delivered to the CEMS at atmospheric pressure.

3.2.1.1.3.7 *Sample Gas Delivery*. The sample line may feed directly to either a converter, a by-pass valve (for Hg speciating systems), or a sample manifold. All valve and/or manifold components must be made of material that is non-reactive to the gas sampled and the calibration gas, and must be configured to safely discharge any excess gas.

3.2.1.1.3.8 *Hg Analyzer*. An instrument is required that continuously measures the total vapor phase Hg concentration in the gas stream. The analyzer may also be capable of measuring elemental and oxidized Hg separately.

3.2.1.1.3.9 *Data Recorder*. A recorder, such as a computerized data acquisition and handling system (DAHS), digital recorder, or data logger, is required for recording measurement data.

3.2.1.2 *Reagents and Standards*.

3.2.1.2.1 *NIST Traceability*. Only NIST-certified or NIST-traceable calibration gas standards and reagents (as defined in paragraphs 3.1.4 and 3.1.5 of this appendix), and including, but not limited to, Hg gas generators and Hg gas cylinders, shall be used for the tests and procedures required under this subpart. Calibration gases with known concentrations of $Hg^0$ and $HgCl_2$ are required. Special reagents and equipment may be needed to prepare the $Hg^0$ and $HgCl_2$ gas standards (*e.g.*, NIST-traceable solutions of $HgCl_2$ and gas generators equipped with mass flow controllers).

3.2.1.2.2 *Required Calibration Gas Concentrations*.

3.2.1.2.2.1 *Zero-Level Gas*. A zero-level calibration gas with a Hg concentration below the level detectable by the Hg analyzer is required for calibration error tests and cycle time tests of the CEMS.

3.2.1.2.2.2 *Low-Level Gas*. A low-level calibration gas with a Hg concentration of 20 to 30 percent of the span value is required for linearity checks and 3-level system integrity checks of the CEMS. Elemental Hg standards are required for the linearity checks and oxidized Hg standards are required for the system integrity checks.

3.2.1.2.2.3 *Mid-Level Gas*. A mid-level calibration gas with a Hg concentration of 50 to 60 percent of the span value is required for linearity checks and for 3-level system integrity checks of the CEMS, and is optional for calibration error tests and single-level system integrity checks. Elemental Hg standards are required for the linearity checks, oxidized Hg standards are required for the system integrity checks, and either elemental or oxidized Hg standards may be used for the calibration error tests.

3.2.1.2.2.4 *High-Level Gas*. A high-level calibration gas with a Hg concentration of 80 to 100 percent of the span value is required for linearity checks, 3-level system integrity checks, and cycle time tests of the CEMS, and is optional for calibration error tests and single-level system integrity checks. Elemental Hg standards are required for the linearity checks, oxidized Hg standards are required for the system integrity checks, and either elemental or oxidized Hg standards may be used for the calibration error and cycle time tests.

3.2.1.3 *Installation and Measurement Location*. For the Hg CEMS and any additional monitoring system(s) needed to convert Hg concentrations to the desired units of measure (*i.e.*, a flow monitor, $CO_2$ or $O_2$ monitor, and/or moisture monitor, as applicable), install each monitoring system at a location: that is consistent with 63.10010(a); that represents the emissions exiting to the atmosphere; and where it is likely that the CEMS can pass the relative accuracy test.

3.2.1.4 *Monitor Span and Range Requirements*. Determine the appropriate span and range value(s) for the Hg CEMS as described in paragraphs 3.2.1.4.1 through 3.2.1.4.3 of this section.

3.2.1.4.1 *Maximum Potential Concentration*. There are three options for determining the maximum potential Hg concentration (MPC). Option 1 applies to coal combustion. You may use a default value of 10 μg/scm for all coal ranks (including coal refuse) except for lignite; for lignite, use 16 μg/scm. If different coals are blended as part of normal operation, use the highest MPC for any fuel in the blend. Option 2 is to base the MPC on the results of site-specific Hg emission testing. This option may be used only if the unit does not have add-on Hg emission controls or a flue gas desulfurization system, or if testing

is performed upstream of all emission control devices. If Option 2 is selected, perform at least three test runs at the normal operating load, and the highest Hg concentration obtained in any of the tests shall be the MPC. Option 3 is to use fuel sampling and analysis to estimate the MPC. To make this estimate, use the average Hg content (*i.e.*, the weight percentage) from at least three representative fuel samples, together with other available information, including, but not limited to the maximum fuel feed rate, the heating value of the fuel, and an appropriate F-factor. Assume that all of the Hg in the fuel is emitted to the atmosphere as vapor-phase Hg.

3.2.1.4.2 *Span Value*. To determine the span value of the Hg CEMS, multiply the Hg concentration corresponding to the applicable emissions standard by two. If the result of this calculation is an exact multiple of 10 μg/scm, use the result as the span value. Otherwise, round off the result to either: the next highest integer; the next highest multiple of 5 μg/scm; or the next highest multiple of 10 μg/scm.

3.2.1.4.3 *Analyzer Range*. The Hg analyzer must be capable of reading Hg concentration as high as the MPC.

3.2.2 *Sorbent Trap Monitoring System*. A sorbent trap monitoring system (as defined in paragraph 3.1.2 of this section) may be used as an alternative to a Hg CEMS. If this option is selected, the monitoring system shall be installed, maintained, and operated in accordance with Performance Specification (PS) 12B in Appendix B to part 60 of this chapter. The system shall be certified in accordance with the provisions of section 4.1.2 of this appendix.

3.2.3 *Other Necessary Data Collection*. To convert measured hourly Hg concentrations to the units of the applicable emissions standard (*i.e.*, lb/TBtu or lb/GWh), additional data must be collected, as described in paragraphs 3.2.3.1 through 3.2.3.3 of this section. Any additional monitoring systems needed for this purpose must be certified, operated, maintained, and quality-assured according to the applicable provisions of part 75 of this chapter (see §§63.10010(b) through (d)). The calculation methods for the types of emission limits described in paragraphs 3.2.3.1 and 3.2.3.2 of this section are presented in section 6.2 of this appendix.

3.2.3.1 *Heat Input-Based Emission Limits*. For a heat input-based Hg emission limit (*i.e.*, in lb/TBtu), data from a certified $CO_2$ or $O_2$ monitor are needed, along with a fuel-specific F-factor and a conversion constant to convert measured Hg concentration values to the units of the standard. In some cases, the stack gas moisture content must also be considered in making these conversions.

3.2.3.2 *Electrical Output-Based Emission Rates*. If the applicable Hg limit is electrical output-based (*i.e.*, lb/GWh), hourly electrical load data and unit operating times are required in addition to hourly data from a certified stack gas flow rate monitor and (if applicable) moisture data.

3.2.3.3 *Sorbent Trap Monitoring System Operation*. Routine operation of a sorbent trap monitoring system requires the use of a certified stack gas flow rate monitor, to maintain an established ratio of stack gas flow rate to sample flow rate.

## 4. Certification and Recertification Requirements

4.1 *Certification Requirements*. All Hg CEMS and sorbent trap monitoring systems and the additional monitoring systems used to continuously measure Hg emissions in units of the applicable emissions standard in accordance with this appendix must be certified in a timely manner, such that the initial compliance demonstration is completed no later than the applicable date in §63.9984(f).

4.1.1 *Hg CEMS*. Table A–1, below, summarizes the certification test requirements and performance specifications for a Hg CEMS. The CEMS may not be used to report quality-assured data until these performance criteria are met. Paragraphs 4.1.1.1 through 4.1.1.5 of this section provide specific instructions for the required tests. All tests must be performed with the affected unit(s) operating (*i.e.*, combusting fuel). Except for the RATA, which must be performed at normal load, no particular load level is required for the certification tests.

4.1.1.1 *7-Day Calibration Error Test*. Perform the 7-day calibration error test on 7 consecutive source operating days, using a zero-level gas and either a high-level or a mid-level calibration gas standard (as defined in paragraphs 3.1.8, 3.1.10, and 3.1.11 of this appendix). Use a NIST-traceable elemental Hg gas standard (as defined in paragraphs 3.1.4 of this appendix) for the test. If your Hg CEMS lacks an integrated elemental Hg gas generator, you may continue to use NIST-traceable oxidized Hg gases for the 7-day calibration error test (or the daily calibration error check) until such time as NIST-traceable compressed elemental Hg gas standards, at appropriate concentration levels, are available from gas vendors. If moisture is added to the calibration gas, the dilution effect of the moisture and/or chlorine addition on the calibration gas concentration must be accounted for in an appropriate manner. Operate the Hg CEMS in its normal sampling mode during the test. The calibrations should be approximately 24 hours apart, unless the 7-day test is performed over non-consecutive calendar days. On each day of the test, inject the zero-level and upscale gases in sequence and record the analyzer responses. Pass the calibration gas through all filters, scrubbers, conditioners, and other monitor components used during normal

sampling, and through as much of the sampling probe as is practical. Do not make any manual adjustments to the monitor (*i.e.*, resetting the calibration) until after taking measurements at both the zero and upscale concentration levels. If automatic adjustments are made following both injections, conduct the calibration error test such that the magnitude of the adjustments can be determined, and use only the unadjusted analyzer responses in the calculations. Calculate the calibration error (CE) on each day of the test, as described in Table A–1 of this appendix. The CE on each day of the test must either meet the main performance specification or the alternative specification in Table A–1 of this appendix.

4.1.1.2 *Linearity Check*. Perform the linearity check using low, mid, and high-level concentrations of NIST-traceable elemental Hg standards. Three gas injections at each concentration level are required, with no two successive injections at the same concentration level. Introduce the calibration gas at the gas injection port, as specified in section 3.2.1.1.3.6 of this appendix. Operate the CEMS at its normal operating temperature and conditions. Pass the calibration gas through all filters, scrubbers, conditioners, and other components used during normal sampling, and through as much of the sampling probe as is practical. If moisture and/or chlorine is added to the calibration gas, the dilution effect of the moisture and/or chlorine addition on the calibration gas concentration must be accounted for in an appropriate manner. Record the monitor response from the data acquisition and handling system for each gas injection. At each concentration level, use the average analyzer response to calculate the linearity error (LE), as described in Table A–1. The LE must either meet the main performance specification or the alternative specification in Table A–1.

4.1.1.3 *Three-Level System Integrity Check*. Perform the 3-level system integrity check using low, mid, and high-level calibration gas concentrations generated by a NIST-traceable source of oxidized Hg. If your Hg CEMS lacks an integrated elemental Hg gas generator, you may continue to use NIST-traceable oxidized Hg gases for the 7-day calibration error test (or the daily calibration error check) until such time as NIST-traceable compressed elemental Hg gas standards, at appropriate concentration levels, are available from gas vendors. Follow the same basic procedure as for the linearity check. If moisture and/or chlorine is added to the calibration gas, the dilution effect of the moisture and/or chlorine addition on the calibration gas concentration must be accounted for in an appropriate manner. Calculate the system integrity error (SIE), as described in Table A–1 of this appendix. The SIE must either meet the main performance specification or the alternative specification in Table A–1 of this appendix.

TABLE A–1—REQUIRED CERTIFICATION TESTS AND PERFORMANCE SPECIFICATIONS FOR $H_g$ CEMS

| For this required certification test . . . | The main performance specification [1] is . . . | The alternate performance specification [1] is . . . | And the conditions of the alternate specification are . . . |
|---|---|---|---|
| 7-day calibration error test [2] [6]. | $\lvert R - A \rvert \leq 5.0\%$ of span value, for both the zero and upscale gases, on each of the 7 days.. | $\lvert R - A \rvert \leq 1.0$ µg/scm ..... | The alternate specification may be used on any day of the test. |
| Linearity check [3] [6] ..... | $\lvert R - A_{avg} \rvert \leq 10.0\%$ of the reference gas concentration at each calibration gas level (low, mid, or high).. | $\lvert R - A_{avg} \rvert \leq 0.8$ µg/scm .. | The alternate specification may be used at any gas level. |
| 3-level system integrity check [4]. | $\lvert R - A_{avg} \rvert \leq 10.0\%$ of the reference gas concentration at each calibration gas level.. | $\lvert R - A_{avg} \rvert \leq 0.8$ µg/scm .. | The alternate specification may be used at any gas level. |
| RATA ..... | 20.0% RA ..... | $\lvert RM_{avg} - C_{avg} \rvert + \lvert CC \rvert \leq 0.5$ µg/scm [7]. | $RM_{avg} < 2.5$µg/scm |
| Cycle time test [5] ..... | 15 minutes where the stability criteria are readings change by < 2.0% of span *or* by ≤ 0.5 µg/scm, for 2 minutes.. | | |

[1] Note that $\lvert R - A \rvert$ is the absolute value of the difference between the reference gas value and the analyzer reading. $\lvert R - A_{avg} \rvert$ is the absolute value of the difference between the reference gas concentration and the average of the analyzer responses, at a particular gas level.

[2] Use elemental Hg standards; a mid-level or high-level upscale gas may be used.

[3] Use elemental Hg standards.

[4] Use oxidized Hg standards.

[5] Use elemental Hg standards; a high-level upscale gas must be used. The cycle time test is not required for Hg CEMS that use integrated batch sampling; however, those monitoring systems must be capable of recording at least one Hg concentration reading every 15 minutes.

[6] If your Hg CEMS lacks an integrated elemental Hg gas generator, you may continue to use NIST-traceable oxidized Hg gases until such time as NIST-traceable compressed elemental Hg gas standards, at appropriate concentration levels, are available from gas vendors.

[7] Note that $|RM_{avg} - C_{avg}|$ is the absolute difference between the mean reference method value and the mean CEMS value from the RATA; CC is the confidence coefficient from Equation 2–5 of Performance Specification 2 in appendix B to part 60 of this chapter.

4.1.1.4 *Cycle Time Test*. Perform the cycle time test, using a zero-level gas and a high-level calibration gas.

Either an elemental or oxidized NIST-traceable Hg standard may be used as the high-level gas. Perform the test in two stages—upscale and downscale. The slower of the upscale and downscale response times is the cycle time for the CEMS. Begin each stage of the test by injecting calibration gas after achieving a stable reading of the stack emissions. The cycle time is the amount of time it takes for the analyzer to register a reading that is 95 percent of the way between the stable stack emissions reading and the final, stable reading of the calibration gas concentration. Use the following criterion to determine when a stable reading of stack emissions or calibration gas has been attained—the reading is stable if it changes by no more than 2.0 percent of the span value or 0.5 μg/scm (whichever is less restrictive) for two minutes, or a reading with a change of less than 6.0 percent from the measured average concentration over 6 minutes. Integrated batch sampling type Hg CEMS are exempted from this test; however, these systems must be capable of delivering a measured Hg concentration reading at least once every 15 minutes. If necessary to increase measurement sensitivity of a batch sampling type Hg CEMS for a specific application, you may petition the Administrator for approval of a time longer than 15 minutes between readings.

4.1.1.5 *Relative Accuracy Test Audit (RATA)*. Perform the RATA of the Hg CEMS at normal load. Acceptable Hg reference methods for the RATA include ASTM D6784–02 (Reapproved 2008), ''Standard Test Method for Elemental, Oxidized, Particle-Bound and Total Mercury in Flue Gas Generated from Coal-Fired Stationary Sources (Ontario Hydro Method)'' (incorporated by reference, see §63.14) and Methods 29, 30A, and 30B in appendix A–8 to part 60 of this chapter. When Method 29 or ASTM D6784–02 is used, paired sampling trains are required and the filterable portion of the sample need not be included when making comparisons to the Hg CEMS results for purposes of a RATA. To validate a Method 29 or ASTM D6784–02 test run, calculate the relative deviation (RD) using Equation A–1 of this section, and assess the results as follows to validate the run. The RD must not exceed 10 percent, when the average Hg concentration is greater than 1.0 μg/dscm. If the RD specification is met, the results of the two samples shall be averaged arithmetically.

$$RD = \frac{|C_a - C_b|}{C_a + C_b} \times 100 \quad (Eq.\ A-1)$$

Where:

RD = Relative Deviation between the Hg concentrations of samples ''a'' and ''b'' (percent),

$C_a$ = Hg concentration of Hg sample ''a'' (μg/dscm), and

$C_b$ = Hg concentration of Hg sample ''b'' (μg/dscm).

4.1.1.5.1 *Special Considerations*. A minimum of nine valid test runs must be performed, directly comparing the CEMS measurements to the reference method. More than nine test runs may be performed. If this option is chosen, the results from a maximum of three test runs may be rejected so long as the total number of test results used to determine the relative accuracy is greater than or equal to nine; however, all data must be reported including the rejected data. The minimum time per run is 21 minutes if Method 30A is used. If Method 29, Method 30B, or ASTM D6784–02 (Reapproved 2008), ''Standard Test Method for Elemental, Oxidized, Particle-Bound and Total Mercury in Flue Gas Generated from Coal-Fired Stationary Sources (Ontario Hydro Method)'' (incorporated by reference, see §63.14) is used, the time per run must be long enough to collect a sufficient mass of Hg to analyze. Complete the RATA within 168 unit operating hours, except when Method 29 or ASTM D6784–02 is used, in which case up to 336 operating hours may be taken to finish the test.

4.1.1.5.2 *Calculation of RATA Results*. Calculate the relative accuracy (RA) of the monitoring system, on a μg/scm basis, as described in section 12 of Performance Specification (PS) 2 in appendix B to part 60 of this chapter (see Equations 2—3 through 2–6 of PS 2). For purposes of calculating the relative accuracy, ensure that the reference method and monitoring system data are on a consistent basis, either wet or dry. The

CEMS must either meet the main performance specification or the alternative specification in Table A–1 of this appendix.

4.1.1.5.3 *Bias Adjustment*. Measurement or adjustment of Hg CEMS data for bias is not required.

4.1.2 *Sorbent Trap Monitoring Systems*. For the initial certification of a sorbent trap monitoring system, only a RATA is required.

4.1.2.1 *Reference Methods*. The acceptable reference methods for the RATA of a sorbent trap monitoring system are the same as those listed in paragraph 4.1.1.5 of this section.

4.1.2.2 ''The special considerations specified in paragraph 4.1.1.5.1 of this section apply to the RATA of a sorbent trap monitoring system. During the RATA, the monitoring system must be operated and quality-assured in accordance with Performance Specification (PS) 12B in Appendix B to part 60 of this chapter with the following exceptions for sorbent trap section 2 breakthrough:

4.1.2.2.1 For stack Hg concentrations >1 μg/dscm, ≤10% of section 1 Hg mass;

4.1.2.2.2 For stack Hg concentrations ≤1 μg/dscm and >0.5 μg/dscm, ≤20% of section 1 Hg mass;

4.1.2.2.3 For stack Hg concentrations ≤0.5 μg/dscm and >0.1 μg/dscm, ≤50% of section 1 Hg mass; and

4.1.2.2.4 For stack Hg concentrations ≤0.1μg/dscm, no breakthrough criterion assuming all other QA/QC specifications are met.

4.1.2.3 The type of sorbent material used by the traps during the RATA must be the same as for daily operation of the monitoring system; however, the size of the traps used for the RATA may be smaller than the traps used for daily operation of the system.

4.1.2.4 *Calculation of RATA Results*. Calculate the relative accuracy (RA) of the sorbent trap monitoring system, on a μg/scm basis, as described in section 12 of Performance Specification (PS) 2 in appendix B to part 60 of this chapter (see Equations 2–3 through 2–6 of PS2). For purposes of calculating the relative accuracy, ensure that the reference method and monitoring system data are on a consistent moisture basis, either wet or dry.The main and alternative RATA performance specifications in Table A–1 for Hg CEMS also apply to the sorbent trap monitoring system.

4.1.2.5 *Bias Adjustment*. Measurement or adjustment of sorbent trap monitoring system data for bias is not required.

4.1.3 *Diluent Gas, Flow Rate, and/or Moisture Monitoring Systems*. Monitoring systems that are used to measure stack gas volumetric flow rate, diluent gas concentration, or stack gas moisture content, either for routine operation of a sorbent trap monitoring system or to convert Hg concentration data to units of the applicable emission limit, must be certified in accordance with the applicable provisions of part 75 of this chapter.

4.2 *Recertification*. Whenever the owner or operator makes a replacement, modification, or change to a certified CEMS or sorbent trap monitoring system that may significantly affect the ability of the system to accurately measure or record pollutant or diluent gas concentrations, stack gas flow rates, or stack gas moisture content, the owner or operator shall recertify the monitoring system. Furthermore, whenever the owner or operator makes a replacement, modification, or change to the flue gas handling system or the unit operation that may significantly change the concentration or flow profile, the owner or operator shall recertify the monitoring system. The same tests performed for the initial certification of the monitoring system shall be repeated for recertification, unless otherwise specified by the Administrator. Examples of changes that require recertification include: replacement of a gas analyzer; complete monitoring system replacement, and changing the location or orientation of the sampling probe.

## 5. Ongoing Quality Assurance (QA) and Data Validation

5.1 *Hg CEMS*.

5.1.1 *Required QA Tests*. Periodic QA testing of each Hg CEMS is required following initial certification. The required QA tests, the test frequencies, and the performance specifications that must be met are summarized in Table A–2, below. All tests must be performed with the affected unit(s) operating (*i.e.*, combusting fuel), however, the daily calibration may optionally be performed offline. The RATA must be performed at normal load, but no particular load level is required for the other tests. For each test, follow the same basic procedures in section 4.1.1 of this appendix that were used for initial certification.

5.1.2 *Test Frequency*. The frequency for the required QA tests of the Hg CEMS shall be as follows:

5.1.2.1 Calibration error tests of the Hg CEMS are required daily, except during unit outages. Use a NIST-traceable elemental Hg gas standard for these calibrations. If your Hg CEMS lacks an integrated elemental Hg gas generator, you may continue to use NIST-traceable oxidized Hg gases for the 7-day calibration error test (or the daily calibration error check) until such time as NIST-traceable compressed elemental Hg gas standards, at appropriate concentration levels, are available from gas vendors. Both a zero-level gas and either a mid-level or high-level gas are required for these calibrations.

5.1.2.2 Perform a linearity check of the Hg CEMS in each QA operating quarter, using low-level, mid-level, and high-level NIST-traceable elemental Hg standards. For units

that operate infrequently, limited exemptions from this test are allowed for ''non-QA operating quarters''. A maximum of three consecutive exemptions for this reason are permitted, following the quarter of the last test. After the third consecutive exemption, a linearity check must be performed in the next calendar quarter or within a grace period of 168 unit or stack operating hours after the end of that quarter. The test frequency for 3-level system integrity checks (if performed in lieu of linearity checks) is the same as for the linearity checks. Use low-level, mid-level, and high-level NIST-traceable oxidized Hg standards for the system integrity checks.

5.1.2.3 Perform a single-level system integrity check weekly, *i.e.*, once every 7 operating days (see the third column in Table A–2 of this appendix).

5.1.2.4 The test frequency for the RATAs of the Hg CEMS shall be annual, *i.e.*, once every four QA operating quarters. For units that operate infrequently, extensions of RATA deadlines are allowed for non-QA operating quarters. Following a RATA, if there is a subsequent non-QA quarter, it extends the deadline for the next test by one calendar quarter. However, there is a limit to these extensions; the deadline may not be extended beyond the end of the eighth calendar quarter after the quarter of the last test. At that point, a RATA must either be performed within the eighth calendar quarter or in a 720 hour unit or stack operating hour grace period following that quarter. When a required annual RATA is done within a grace period, the deadline for the next RATA is three QA operating quarters after the quarter in which the grace period test is performed.

5.1.3 *Grace Periods*.

5.1.3.1 A 168 unit or stack operating hour grace period is available for quarterly linearity checks and 3-level system integrity checks of the Hg CEMS.

5.1.3.2 A 720 unit or stack operating hour grace period is available for RATAs of the Hg CEMS.

5.1.3.3 There is no grace period for weekly system integrity checks. The test must be completed once every 7 operating days.

5.1.4 *Data Validation*. The Hg CEMS is considered to be out-of-control, and data from the CEMS may not be reported as quality-assured, when any one of the acceptance criteria for the required QA tests in Table A–2 is not met. The CEMS is also considered to be out-of-control when a required QA test is not performed on schedule or within an allotted grace period. To end an out-of-control period, the QA test that was either failed or not done on time must be performed and passed. Out-of-control periods are counted as hours of monitoring system downtime.

5.1.5 *Conditional Data Validation*. For certification, recertification, and diagnostic testing of Hg monitoring systems, and for the required QA tests when non-redundant backup Hg monitoring systems or temporary like-kind Hg analyzers are brought into service, the conditional data validation provisions in §§75.20(b)(3)(ii) through (b)(3)(ix) of this chapter may be used to avoid or minimize data loss. The allotted window of time to complete 7-day calibration error tests, linearity checks, cycle time tests, and RATAs shall be as specified in §75.20(b)(3)(iv) of this chapter. Required system integrity checks must be completed within 168 unit or stack operating hours after the probationary calibration error test.

TABLE A–2—ON-GOING QA TEST REQUIREMENTS FOR $H_g$ CEMS

| Perform this type of QA test . . . | At this frequency . . . | With these qualifications and exceptions . . . | Acceptance criteria . . . |
|---|---|---|---|
| Calibration error test[5] ..... | Daily ..... | • Use either a mid- or high-level gas.<br>• Use elemental Hg .....<br>• Calibrations are not required when the unit is not in operation.. | $\lvert R - A \rvert \leq 5.0\%$ of span value<br>*or*<br>$\lvert R - A \rvert \leq 1.0$ µg/scm. |
| Single-level system integrity check. | Weekly[1] ..... | • Use oxidized Hg—either mid- or high-level. | $\lvert R - A_{avg} \rvert \leq 10.0\%$ of the reference gas value<br>*or*<br>$\lvert R - A_{avg} \rvert \leq 0.8$ µg/scm. |
| Linearity check *or* 3-level system integrity check. | Quarterly[3] ..... | • Required in each ''QA operating quarter''[2] and no less than once every 4 calendar quarters.<br>• 168 operating hour grace period available.<br>• Use elemental Hg for linearity check.<br>• Use oxidized Hg for system integrity check. | $\lvert R - A_{avg} \rvert \leq 10.0\%$ of the reference gas value, at each calibration gas level<br>*or*<br>$\lvert R - A_{avg} \rvert \leq 0.8$ µg/scm. |

TABLE A–2—ON-GOING QA TEST REQUIREMENTS FOR $H_g$ CEMS—Continued

| Perform this type of QA test . . . | At this frequency . . . | With these qualifications and exceptions . . . | Acceptance criteria . . . |
|---|---|---|---|
| RATA | Annual[4] | • Test deadline may be extended for "non-QA operating quarters," up to a maximum of 8 quarters from the quarter of the previous test.<br>• 720 operating hour grace period available. | ≤20.0% RA *or*<br>$\lvert RM_{avg} - C_{avg}\rvert + \lvert CC\rvert \leq 0.5$ µg/scm, if $RM_{avg} < 2.5$ µg/scm. |

[1] "Weekly" means once every 7 operating days.
[2] A "QA operating quarter" is a calendar quarter with at least 168 unit or stack operating hours.
[3] "Quarterly" means once every QA operating quarter.
[4] "Annual" means once every four QA operating quarters.
[5] If your Hg CEMS lacks an integrated elemental Hg gas generator, you may continue to use NIST-traceable oxidized Hg gases until such time as NIST-traceable compressed elemental Hg gas standards, at appropriate concentration levels, are available from gas vendors.

5.1.6 *Adjustment of Span.* If you discover that a span adjustment is needed (e.g., if the Hg concentration readings exceed the span value for a significant percentage of the unit operating hours in a calendar quarter), you must implement the span adjustment within 90 days after the end of the calendar quarter in which you identify the need for the adjustment. A diagnostic linearity check is required within 168 unit or stack operating hours after changing the span value.

5.2 *Sorbent Trap Monitoring Systems.*

5.2.1 Each sorbent trap monitoring system shall be continuously operated and maintained in accordance with Performance Specification (PS) 12B in appendix B to part 60 of this chapter. The QA/QC criteria for routine operation of the system are summarized in Table 12B–1 of PS 12B. Each pair of sorbent traps may be used to sample the stack gas for up to 15 operating days.

5.2.2 For ongoing QA, periodic RATAs of the system are required.

5.2.2.1 The RATA frequency shall be annual, *i.e.*, once every four QA operating quarters. The provisions in section 5.1.2.4 of this appendix pertaining to RATA deadline extensions also apply to sorbent trap monitoring systems.

5.2.2.2 The same RATA performance criteria specified in Table A–2 for Hg CEMS also apply to the annual RATAs of the sorbent trap monitoring system.

5.2.2.3 A 720 unit or stack operating hour grace period is available for RATAs of the monitoring system.

5.2.3 Data validation for sorbent trap monitoring systems shall be done in accordance with Table 12B–1 in Performance Specification (PS) 12B in appendix B to part 60 of this chapter. All periods of invalid data shall be counted as hours of monitoring system downtime.

5.3 *Flow Rate, Diluent Gas, and Moisture Monitoring Systems.* The on-going QA test requirements for these monitoring systems are specified in part 75 of this chapter (see §§ 63.10010(b) through (d)).

5.4 *QA/QC Program Requirements.* The owner or operator shall develop and implement a quality assurance/quality control (QA/QC) program for the Hg CEMS and/or sorbent trap monitoring systems that are used to provide data under this subpart. At a minimum, the program shall include a written plan that describes in detail (or that refers to separate documents containing) complete, step-by-step procedures and operations for the most important QA/QC activities. Electronic storage of the QA/QC plan is permissible, provided that the information can be made available in hard copy to auditors and inspectors. The QA/QC program requirements for the diluent gas, flow rate, and moisture monitoring systems described in section 3.2.1.3 of this appendix are specified in section 1 of appendix B to part 75 of this chapter.

5.4.1 *General Requirements.*

5.4.1.1 *Preventive Maintenance.* Keep a written record of procedures needed to maintain the Hg CEMS and/or sorbent trap monitoring system(s) in proper operating condition and a schedule for those procedures. Include, at a minimum, all procedures specified by the manufacturers of the equipment and, if applicable, additional or alternate procedures developed for the equipment.

5.4.1.2 *Recordkeeping and Reporting.* Keep a written record describing procedures that will be used to implement the recordkeeping and reporting requirements of this appendix.

5.4.1.3 *Maintenance Records.* Keep a record of all testing, maintenance, or repair activities performed on any Hg CEMS or sorbent trap monitoring system in a location and format suitable for inspection. A maintenance log may be used for this purpose. The following records should be maintained: date, time, and description of any testing, adjustment, repair, replacement, or preventive maintenance action performed on any

monitoring system and records of any corrective actions associated with a monitor outage period. Additionally, any adjustment that may significantly affect a system's ability to accurately measure emissions data must be recorded (e.g., changing the dilution ratio of a CEMS), and a written explanation of the procedures used to make the adjustment(s) shall be kept.

5.4.2 *Specific Requirements for Hg CEMS.*

5.4.2.1 *Daily Calibrations, Linearity Checks and System Integrity Checks.* Keep a written record of the procedures used for daily calibrations of the Hg CEMS. If moisture and/or chlorine is added to the Hg calibration gas, document how the dilution effect of the moisture and/or chlorine addition on the calibration gas concentration is accounted for in an appropriate manner. Also keep records of the procedures used to perform linearity checks of the Hg CEMS and the procedures for system integrity checks of the Hg CEMS. Document how the test results are calculated and evaluated.

5.4.2.2 *Monitoring System Adjustments.* Document how each component of the Hg CEMS will be adjusted to provide correct responses to calibration gases after routine maintenance, repairs, or corrective actions.

5.4.2.3 *Relative Accuracy Test Audits.* Keep a written record of procedures used for RATAs of the Hg CEMS. Indicate the reference methods used and document how the test results are calculated and evaluated.

5.4.3 *Specific Requirements for Sorbent Trap Monitoring Systems.*

5.4.3.1 *Sorbent Trap Identification and Tracking.* Include procedures for inscribing or otherwise permanently marking a unique identification number on each sorbent trap, for chain of custody purposes. Keep records of the ID of the monitoring system in which each sorbent trap is used, and the dates and hours of each Hg collection period.

5.4.3.2 *Monitoring System Integrity and Data Quality.* Document the procedures used to perform the leak checks when a sorbent trap is placed in service and removed from service. Also Document the other QA procedures used to ensure system integrity and data quality, including, but not limited to, gas flow meter calibrations, verification of moisture removal, and ensuring air-tight pump operation. In addition, the QA plan must include the data acceptance and quality control criteria in Table 12B–1 in section 9.0 of Performance Specification (PS) 12B in Appendix B to part 60 of this chapter. All reference meters used to calibrate the gas flow meters (e.g., wet test meters) shall be periodically recalibrated. Annual, or more frequent, recalibration is recommended. If a NIST-traceable calibration device is used as a reference flow meter, the QA plan must include a protocol for ongoing maintenance and periodic recalibration to maintain the accuracy and NIST-traceability of the calibrator.

5.4.3.3 *Hg Analysis.* Explain the chain of custody employed in packing, transporting, and analyzing the sorbent traps. Keep records of all Hg analyses. The analyses shall be performed in accordance with the procedures described in section 11.0 of Performance Specification (PS) 12B in Appendix B to part 60 of this chapter.

5.4.3.4 *Data Collection Period.* State, and provide the rationale for, the minimum acceptable data collection period (e.g., one day, one week, etc.) for the size of sorbent trap selected for the monitoring. Address such factors as the Hg concentration in the stack gas, the capacity of the sorbent trap, and the minimum mass of Hg required for the analysis. Each pair of sorbent traps may be used to sample the stack gas for up to 14 operating days.

5.4.3.5 *Relative Accuracy Test Audit Procedures.* Keep records of the procedures and details peculiar to the sorbent trap monitoring systems that are to be followed for relative accuracy test audits, such as sampling and analysis methods.

## 6. Data Reduction and Calculations

6.1 Data Reduction.

6.1.1 Reduce the data from Hg CEMS to hourly averages, in accordance with § 60.13(h)(2) of this chapter.

6.1.2 For sorbent trap monitoring systems, determine the Hg concentration for each data collection period and assign this concentration value to each operating hour in the data collection period.

6.1.3 For any operating hour in which valid data are not obtained, either for Hg concentration or for a parameter used in the emissions calculations (*i.e.*, flow rate, diluent gas concentration, or moisture, as applicable), do not calculate the Hg emission rate for that hour. For the purposes of this appendix, part 75 substitute data values are not considered to be valid data.

6.1.4 Operating hours in which valid data are not obtained for Hg concentration are considered to be hours of monitor downtime. The use of substitute data for Hg concentration is not required.

6.2 *Calculation of Hg Emission Rates.* Use the applicable calculation methods in paragraphs 6.2.1 and 6.2.2 of this section to convert Hg concentration values to the appropriate units of the emission standard.

6.2.1 *Heat Input-Based Hg Emission Rates.* Calculate hourly heat input-based Hg emission rates, in units of lb/TBtu, according to sections 6.2.1.1 through 6.2.1.4 of this appendix.

6.2.1.1 Select an appropriate emission rate equation from among Equations 19–1 through 19–9 in EPA Method 19 in appendix A–7 to part 60 of this chapter.

6.2.1.2 Calculate the Hg emission rate in lb/MMBtu, using the equation selected from Method 19. Multiply the Hg concentration value by $6.24 \times 10^{-11}$ to convert it from µg/scm to lb/scf. In cases where an appropriate F-factor is not listed in Table 19–2 of Method 19, you may use F-factors from Table 1 in section 3.3.5 of appendix F to part 75 of this chapter, or F-factors derived using the procedures in section 3.3.6 of appendix to part 75 of this chapter. Also, for startup and shutdown hours, you may calculate the Hg emission rate using the applicable diluent cap value specified in section 3.3.4.1 of appendix F to part 75 of this chapter, provided that the diluent gas monitor is not out-of-control and the hourly average $O_2$ concentration is above 14.0% $O_2$ (19.0% for an IGCC) or the hourly average $CO_2$ concentration is below 5.0% $CO_2$ (1.0% for an IGCC), as applicable.

6.2.1.3 Multiply the lb/MMBtu value obtained in section 6.2.1.2 of this appendix by $10^6$ to convert it to lb/TBtu.

6.2.1.4 The heat input-based Hg emission rate limit in Table 2 to this subpart must be met on a 30 boiler operating day rolling average basis, except as otherwise provided in §63.10009(a)(2). Use Equation 19–19 in EPA Method 19 to calculate the Hg emission rate for each averaging period. The term $E_{hj}$ in Equation 19–19 must be in the units of the applicable emission limit. Do not include non-operating hours with zero emissions in the average.

6.2.2 *Electrical Output-Based Hg Emission Rates.* Calculate electrical output-based Hg emission limits in units of lb/GWh, according to sections 6.2.2.1 through 6.2.2.3 of this appendix.

6.2.2.1 Calculate the Hg mass emissions for each operating hour in which valid data are obtained for all parameters, using Equation A–2 of this section (for wet-basis measurements of Hg concentration) or Equation A–3 of this section (for dry-basis measurements), as applicable:

$$M_h = K C_h Q_h \qquad \text{(Equation A-2)}$$

Where:

$M_h$ = Hg mass emission rate for the hour (lb/h)

K = Units conversion constant, $6.24 \times 10^{-11}$ lb-scm/µg-scf,

$C_h$ = Hourly average Hg concentration, wet basis (µg/scm)

$Q_h$ = Stack gas volumetric flow rate for the hour (scfh).

(NOTE: Use unadjusted flow rate values; bias adjustment is not required)

$$M_h = K C_h Q_h \left(1 - B_{ws}\right) \qquad \text{(Equation A-3)}$$

Where:

$M_h$ = Hg mass emission rate for the hour (lb/h)

K = Units conversion constant, $6.24 \times 10^{-11}$ lb-scm/µg-scf.

$C_h$ = Hourly average Hg concentration, dry basis (µg/dscm).

$Q_h$ = Stack gas volumetric flow rate for the hour (scfh)

(NOTE: Use unadjusted flow rate values; bias adjustment is not required).

$B_{ws}$ = Moisture fraction of the stack gas, expressed as a decimal (equal to % $H_2O$/100)

6.2.2.2 Use Equation A–4 of this section to calculate the emission rate for each unit or stack operating hour in which valid data are obtained for all parameters.

$$E_{ho} = \frac{M_h}{(MW)_h} x\, 10^3 \qquad \text{(Equation A-4)}$$

Where:

$E_{ho}$ = Electrical output-based Hg emission rate (lb/GWh).

$M_h$ = Hg mass emission rate for the hour, from Equation A–2 or A–3 of this section, as applicable (lb/h).

$(MW)_h$ = Gross electrical load for the hour, in megawatts (MW).

$10^3$ = Conversion factor from megawatts to gigawatts.

6.2.2.3 The applicable gross output-based Hg emission rate limit in Table 1 or 2 to this subpart must be met on a 30- (or 90-) boiler operating day rolling average basis, except as otherwise provided in §63.10009(a)(2). Use Equation A–5 of this appendix to calculate the Hg emission rate for each averaging period.

$$\bar{E}_o = \frac{\sum_{h=1}^{n} E_{ho}}{n} \quad (Eq.\ A-5)$$

Where:

$\bar{E}_o$ = Hg emission rate for the averaging period (lb/GWh),

$E_{ho}$ = Gross output-based hourly Hg emission rate for unit or stack sampling hour ''h'' in the averaging period, from Equation A–4 of this appendix (lb/GWh), and

n = Number of unit or stack operating hours in the averaging period in which valid data were obtained for all parameters. (NOTE: DO *not* INCLUDE NON-OPERATING HOURS WITH ZERO EMISSION RATES IN THE AVERAGE).

## 7. RECORDKEEPING AND REPORTING

7.1 *Recordkeeping Provisions*. For the Hg CEMS and/or sorbent trap monitoring systems and any other necessary monitoring systems installed at each affected unit, the owner or operator must maintain a file of all measurements, data, reports, and other information required by this appendix in a form suitable for inspection, for 5 years from the date of each record, in accordance with §63.10033. The file shall contain the information in paragraphs 7.1.1 through 7.1.10 of this section.

7.1.1 *Monitoring Plan Records*. For each affected unit or group of units monitored at a common stack, the owner or operator shall prepare and maintain a monitoring plan for the Hg CEMS and/or sorbent trap monitoring system(s) and any other monitoring system(s) (*i.e.*, flow rate, diluent gas, or moisture systems) needed for routine operation of a sorbent trap monitoring system or to convert Hg concentrations to units of the applicable emission standard. The monitoring plan shall contain essential information on the continuous monitoring systems and shall Document how the data derived from these systems ensure that all Hg emissions from the unit or stack are monitored and reported.

7.1.1.1 *Updates*. Whenever the owner or operator makes a replacement, modification, or change in a certified continuous monitoring system that is used to provide data under this subpart (including a change in the automated data acquisition and handling system or the flue gas handling system) which affects information reported in the monitoring plan (e.g., a change to a serial number for a component of a monitoring system), the owner or operator shall update the monitoring plan.

7.1.1.2 *Contents of the Monitoring Plan*. For Hg CEMS and sorbent trap monitoring systems, the monitoring plan shall contain the information in sections 7.1.1.2.1 and 7.1.1.2.2 of this appendix, as applicable. For stack gas flow rate, diluent gas, and moisture monitoring systems, the monitoring plan shall include the information required for those systems under §75.53 (g) of this chapter.

7.1.1.2.1 *Electronic*. The electronic monitoring plan records must include the following: unit or stack ID number(s); monitoring location(s); the Hg monitoring methodologies used; emissions controls; Hg monitoring system information, including, but not limited to: Unique system and component ID numbers; the make, model, and serial number of the monitoring equipment; the sample acquisition method; formulas used to calculate Hg emissions; and Hg monitor span and range information. The electronic monitoring plan shall be evaluated and submitted using the ECMPS Client Tool provided by the Clean Air Markets Division in the Office of Atmospheric Programs of the EPA.

7.1.1.2.2 *Hard Copy*. Keep records of the following: schematics and/or blueprints showing the location of the Hg monitoring system(s) and test ports; data flow diagrams; test protocols; monitor span and range calculations; miscellaneous technical justifications.

7.1.2 *Operating Parameter Records*. The owner or operator shall record the following information for each operating hour of each affected unit and also for each group of units utilizing a common stack, to the extent that these data are needed to convert Hg concentration data to the units of the emission standard. For non-operating hours, record only the items in paragraphs 7.1.2.1 and 7.1.2.2 of this section. If there is heat input to the unit(s), but no electrical load, record only the items in paragraphs 7.1.2.1, 7.1.2.2, and (if applicable) 7.1.2.4 of this section.

7.1.2.1 The date and hour;

7.1.2.2 The unit or stack operating time (rounded up to the nearest fraction of an hour (in equal increments that can range

from one hundredth to one quarter of an hour, at the option of the owner or operator);

7.1.2.3 The hourly gross unit load (rounded to nearest MWe); and

7.1.2.4 If applicable, the F-factor used to calculate the heat input-based Hg emission rate.

7.1.2.5 If applicable, a flag to indicate that the hour is a startup or shutdown hour (as defined in §63.10042).

7.1.2.6 The EGUs that constitute an emissions averaging group.

7.1.3 *Hg Emissions Records (Hg CEMS).* For each affected unit or common stack using a Hg CEMS, the owner or operator shall record the following information for each unit or stack operating hour:

7.1.3.1 The date and hour;

7.1.3.2 Monitoring system and component identification codes, as provided in the monitoring plan, if the CEMS provides a quality-assured value of Hg concentration for the hour;

7.1.3.3 The hourly Hg concentration, if a quality-assured value is obtained for the hour (μg/scm, with one leading non-zero digit and one decimal place, expressed in scientific notation). Use the following rounding convention: If the digit immediately following the first decimal place is 5 or greater, round the first decimal place upward (increase it by one); if the digit immediately following the first decimal place is 4 or less, leave the first decimal place unchanged;

7.1.3.4 A special code, indicating whether or not a quality-assured Hg concentration is obtained for the hour. This code may be entered manually when a temporary like-kind replacement Hg analyzer is used for reporting; and

7.1.3.5 Monitor data availability, as a percentage of unit or stack operating hours, calculated according to §75.32 of this chapter.

7.1.4 *Hg Emissions Records (Sorbent Trap Monitoring Systems).* For each affected unit or common stack using a sorbent trap monitoring system, each owner or operator shall record the following information for the unit or stack operating hour in each data collection period:

7.1.4.1 The date and hour;

7.1.4.2 Monitoring system and component identification codes, as provided in the monitoring plan, if the sorbent trap system provides a quality-assured value of Hg concentration for the hour;

7.1.4.3 The hourly Hg concentration, if a quality-assured value is obtained for the hour (μg/scm, with one leading non-zero digit and one decimal place, expressed in scientific notation). Use the following rounding convention: If the digit immediately following the first decimal place is 5 or greater, round the first decimal place upward (increase it by one); if the digit immediately following the first decimal place is 4 or less, leave the first decimal place unchanged. Note that when a single quality-assured Hg concentration value is obtained for a particular data collection period, that single concentration value is applied to each operating hour of the data collection period.

7.1.4.4 A special code, indicating whether or not a quality-assured Hg concentration is obtained for the hour;

7.1.4.5 The average flow rate of stack gas through each sorbent trap (in appropriate units, e.g., liters/min, cc/min, dscm/min);

7.1.4.6 The gas flow meter reading (in dscm, rounded to the nearest hundredth), at the beginning and end of the collection period and at least once in each unit operating hour during the collection period;

7.1.4.7 The ratio of the stack gas flow rate to the sample flow rate, as described in section 12.2 of Performance Specification (PS) 12B in Appendix B to part 60 of this chapter; and

7.1.4.8 Monitor data availability, as a percentage of unit or stack operating hours, calculated according to §75.32 of this chapter.

7.1.5 *Stack Gas Volumetric Flow Rate Records.*

7.1.5.1 Hourly measurements of stack gas volumetric flow rate during unit operation are required for routine operation of sorbent trap monitoring systems, to maintain the required ratio of stack gas flow rate to sample flow rate (see section 8.2.2 of Performance Specification (PS) 12B in Appendix B to part 60 of this chapter). Hourly stack gas flow rate data are also needed in order to demonstrate compliance with electrical output-based Hg emissions limits, as provided in section 6.2.2 of this appendix.

7.1.5.2 For each affected unit or common stack, if hourly measurements of stack gas flow rate are needed for sorbent trap monitoring system operation or to convert Hg concentrations to the units of the emission standard, use a flow rate monitor that meets the requirements of part 75 of this chapter to record the required data. You must keep hourly flow rate records, as specified in §75.57(c)(2) of this chapter.

7.1.6 *Records of Stack Gas Moisture Content.*

7.1.6.1 Correction of hourly Hg concentration data for moisture is sometimes required when converting Hg concentrations to the units of the applicable Hg emissions limit. In particular, these corrections are required:

7.1.6.1.1 For sorbent trap monitoring systems;

7.1.6.1.2 For Hg CEMS that measure Hg concentration on a dry basis, when you must calculate electrical output-based Hg emission rates; and

7.1.6.1.3 When using certain equations from EPA Method 19 in appendix A–7 to part 60 of this chapter to calculate heat input-based Hg emission rates.

7.1.6.2 If hourly moisture corrections are required, either use a fuel-specific default moisture percentage from §75.11(b)(1) of this

chapter or a certified moisture monitoring system that meets the requirements of part 75 of this chapter, to record the required data. If you use a moisture monitoring system, you must keep hourly records of the stack gas moisture content, as specified in §75.57(c)(3) of this chapter.

7.1.7 *Records of Diluent Gas ($CO_2$ or $O_2$)* Concentration.

7.1.7.1 When a heat input-based Hg mass emissions limit must be met, in units of lb/TBtu, hourly measurements of $CO_2$ or $O_2$ concentration are required to convert Hg concentrations to units of the standard.

7.1.7.2 If hourly measurements of diluent gas concentration are needed, use a certified $CO_2$ or $O_2$ monitor that meets the requirements of part 75 of this chapter to record the required data. You must keep hourly $CO_2$ or $O_2$ concentration records, as specified in §75.57(g) of this chapter.

7.1.8 *Hg Emission Rate Records*. For applicable Hg emission limits in units of lb/TBtu or lb/GWh, record the following information for each affected unit or common stack:

7.1.8.1 The date and hour;

7.1.8.2 The hourly Hg emissions rate (lb/TBtu or lb/GWh, as applicable), calculated according to section 6.2.1 or 6.2.2 of this appendix, rounded to the same precision as the standard (*i.e.*, with one leading non-zero digit and one decimal place, expressed in scientific notation), if valid values of Hg concentration and all other required parameters (stack gas volumetric flow rate, diluent gas concentration, electrical load, and moisture data, as applicable) are obtained for the hour. Use the following rounding convention: If the digit immediately following the first decimal place is 5 or greater, round the first decimal place upward (increase it by one); if the digit immediately following the first decimal place is 4 or less, leave the first decimal place unchanged;

7.1.8.3 An identification code for the formula (either the selected equation from Method 19 in section 6.2.1 of this appendix or Equation A–4 in section 6.2.2 of this appendix) used to derive the hourly Hg emission rate from Hg concentration, flow rate, electrical load, diluent gas concentration, and moisture data (as applicable); and

7.1.8.4 A code indicating that the Hg emission rate was not calculated for the hour, if valid data for Hg concentration and/or any of the other necessary parameters are not obtained for the hour. For the purposes of this appendix, the substitute data values required under part 75 of this chapter for diluent gas concentration, stack gas flow rate and moisture content are not considered to be valid data.

7.1.8.5 If applicable, a code to indicate that the default gross output (as defined in §63.10042) was used to calculate the Hg emission rate.

7.1.8.6 If applicable, a code to indicate that the diluent cap (as defined in §63.10042) was used to calculate the Hg emission rate.

7.1.9 *Certification and Quality Assurance Test Records*. For any Hg CEMS and sorbent trap monitoring systems used to provide data under this subpart, record the following certification and quality-assurance information:

7.1.9.1 The reference values, monitor responses, and calculated calibration error (CE) values, and a flag to indicate whether the test was done using elemental or oxidized Hg, for all required 7-day calibration error tests and daily calibration error tests of the Hg CEMS;

7.1.9.2 The reference values, monitor responses, and calculated linearity error (LE) or system integrity error (SIE) values for all linearity checks of the Hg CEMS, and for all single-level and 3-level system integrity checks of the Hg CEMS;

7.1.9.3 The CEMS and reference method readings for each test run and the calculated relative accuracy results for all RATAs of the Hg CEMS and/or sorbent trap monitoring systems;

7.1.9.4 The stable stack gas and calibration gas readings and the calculated results for the upscale and downscale stages of all required cycle time tests of the Hg CEMS or, for a batch sampling Hg CEMS, the interval between measured Hg concentration readings;

7.1.9.5 Supporting information for all required RATAs of the Hg monitoring systems, including records of the test dates, the raw reference method and monitoring system data, the results of sample analyses to substantiate the reported test results, and records of sampling equipment calibrations;

7.1.9.6 For sorbent trap monitoring systems, also keep records of the results of all analyses of the sorbent traps used for routine daily operation of the system, and information documenting the results of all leak checks and the other applicable quality control procedures described in Table 12B–1 of Performance Specification (PS) 12B in appendix B to part 60 of this chapter.

7.1.9.7 For stack gas flow rate, diluent gas, and (if applicable) moisture monitoring systems, you must keep records of all certification, recertification, diagnostic, and ongoing quality-assurance tests of these systems, as specified in §75.59 of this chapter.

7.2 *Reporting Requirements*.

7.2.1 *General Reporting Provisions*. The owner or operator shall comply with the following requirements for reporting Hg emissions from each affected unit (or group of units monitored at a common stack) under this subpart:

7.2.1.1 Notifications, in accordance with paragraph 7.2.2 of this section;

7.2.1.2 Monitoring plan reporting, in accordance with paragraph 7.2.3 of this section;

7.2.1.3 Certification, recertification, and QA test submittals, in accordance with paragraph 7.2.4 of this section; and

7.2.1.4 Electronic quarterly report submittals, in accordance with paragraph 7.2.5 of this section.

7.2.2 *Notifications*. The owner or operator shall provide notifications for each affected unit (or group of units monitored at a common stack) under this subpart in accordance with §63.10030.

7.2.3 *Monitoring Plan Reporting*. For each affected unit (or group of units monitored at a common stack) under this subpart using Hg CEMS or sorbent trap monitoring system to measure Hg emissions, the owner or operator shall make electronic and hard copy monitoring plan submittals as follows:

7.2.3.1 For an EGU that begins reporting hourly Hg concentrations with a previously-certified Hg monitoring system, submit the monitoring plan information in section 7.1.1.2 of this appendix prior to or concurrent with the first required quarterly emissions report. For a new EGU, or for an EGU switching to continuous monitoring of Hg emissions after having implemented another allowable compliance option under this subpart, submit the information in section 7.1.1.2 of this appendix at least 21 days prior to the start of initial certification testing of the CEMS. Also submit the monitoring plan information in section 75.53(g) pertaining to any required flow rate, diluent gas, and moisture monitoring systems within the applicable time frame specified in this section, if the required records are not already in place.

7.2.3.2 Whenever an update of the monitoring plan is required, as provided in paragraph 7.1.1.1 of this section. An electronic monitoring plan information update must be submitted either prior to or concurrent with the quarterly report for the calendar quarter in which the update is required.

7.2.3.3 All electronic monitoring plan submittals and updates shall be made to the Administrator using the ECMPS Client Tool. Hard copy portions of the monitoring plan shall be kept on record according to section 7.1 of this appendix.

7.2.4 *Certification, Recertification, and Quality-Assurance Test Reporting*. Except for daily QA tests of the required monitoring systems (*i.e.*, calibration error tests and flow monitor interference checks), the results of all required certification, recertification, and quality-assurance tests described in paragraphs 7.1.9.1 through 7.1.9.7 of this section (except for test results previously submitted, e.g., under the ARP) shall be submitted electronically, using the ECMPS Client Tool, either prior to or concurrent with the relevant quarterly electronic emissions report.

7.2.5 *Quarterly Reports*.

7.2.5.1 Beginning with the report for the calendar quarter in which the initial compliance demonstration is completed or the calendar quarter containing the applicable date in §63.9984, the owner or operator of any affected unit shall use the ECMPS Client Tool to submit electronic quarterly reports to the Administrator, in an XML format specified by the Administrator, for each affected unit (or group of units monitored at a common stack) under this subpart.

7.2.5.2 The electronic reports must be submitted within 30 days following the end of each calendar quarter, except for units that have been placed in long-term cold storage.

7.2.5.3 Each electronic quarterly report shall include the following information:

7.2.5.3.1 The date of report generation;

7.2.5.3.2 Facility identification information;

7.2.5.3.3 The information in paragraphs 7.1.2 through 7.1.8 of this section, as applicable to the Hg emission measurement methodology (or methodologies) used and the units of the Hg emission standard(s); and

7.2.5.3.4 The results of all daily calibration error tests of the Hg CEMS, as described in paragraph 7.1.9.1 of this section and (if applicable) the results of all daily flow monitor interference checks.

7.2.5.4 *Compliance Certification*. Based on reasonable inquiry of those persons with primary responsibility for ensuring that all Hg emissions from the affected unit(s) under this subpart have been correctly and fully monitored, the owner or operator shall submit a compliance certification in support of each electronic quarterly emissions monitoring report. The compliance certification shall include a statement by a responsible official with that official's name, title, and signature, certifying that, to the best of his or her knowledge, the report is true, accurate, and complete.

[77 FR 9464, Feb. 16, 2012, as amended at 77 FR 23408, Apr. 19, 2012; 78 FR 24093, Apr. 24, 2013; 79 FR 68795, Nov. 19, 2014; 81 FR 20203 Apr. 6, 2016; 82 FR 16740, Apr. 6, 2017; 85 FR 55766, Sept. 9, 2020]

## APPENDIX B TO SUBPART UUUUU OF PART 63—-HCL AND HF MONITORING PROVISIONS

### 1. APPLICABILITY

These monitoring provisions apply to the measurement of HCl and/or HF emissions from electric utility steam generating units, using CEMS. The CEMS must be capable of measuring HCl and/or HF in the appropriate units of the applicable emissions standard (e.g., lb/MMBtu, lb/MWh, or lb/GWh).

### 2. MONITORING OF HCL AND/OR HF EMISSIONS

2.1 *Monitoring System Installation Requirements*. Install HCl and/or HF CEMS and any

additional monitoring systems needed to convert pollutant concentrations to units of the applicable emissions limit in accordance with §63.10010(a) and either Performance Specification 15 (PS 15) of appendix B to part 60 of this chapter for extractive Fourier Transform Infrared Spectroscopy (FTIR) continuous emissions monitoring systems or Performance Specification 18 (PS 18) of appendix B to part 60 of this chapter for HCl CEMS.

2.2 *Primary and Backup Monitoring Systems.* The provisions pertaining to primary and redundant backup monitoring systems in section 2.2 of appendix A to this subpart apply to HCl and HF CEMS and any additional monitoring systems needed to convert pollutant concentrations to units of the applicable emissions limit.

2.3 *Monitoring System Equipment, Supplies, Definitions, and General Operation.*

The following provisions apply:

2.3.1 PS 15, Sections 2.0, 3.0, 4.0, 5.0, 6.0, and 10.0 of appendix B to part 60 of this chapter; or

2.3.2 PS 18, Sections 3.0, 6.0, and 11.0 of appendix B to part 60 of this chapter.

3. INITIAL CERTIFICATION PROCEDURES

The initial certification procedures for the HCl or HF CEMS used to provide data under this subpart are as follows:

3.1 If you choose to follow PS 15 of appendix B to part 60 of this chapter, then your HCl and/or HF CEMS must be certified according to PS 15 using the procedures for gas auditing and comparison to a reference method (RM) as specified in sections 3.1.1 and 3.1.2 below.

3.1.1 You must conduct a gas audit of the HCl and/or HF CEMS as described in section 9.1 of Performance Specification 15, with the exceptions listed in sections 3.1.2.1 and 3.1.2.2 below.

3.1.1.1 The audit sample gas does not have to be obtained from the Administrator; however, it must be (1) from a secondary source of certified gases (*i.e.*, independent of any calibration gas used for the daily calibration assessments) and (2) directly traceable to National Institute of Standards and Technology (NIST) or VSL Dutch Metrology Institute (VSL) reference materials through an unbroken chain of comparisons. If audit gas traceable to NIST or VSL reference materials is not available, you may use a gas with a concentration certified to a specified uncertainty by the gas manufacturer.

3.1.1.2 Analyze the results of the gas audit using the calculations in section 12.1 of Performance Specification 15. The calculated correction factor (CF) from Eq. 6 of Performance Specification 15 must be between 0.85 and 1.15. You do not have to test the bias for statistical significance.

3.1.2 You must perform a relative accuracy test audit or RATA according to section 11.1.1.4 of Performance Specification 15 and the requirements below. Perform the RATA of the HCl or HF CEMS at normal load. Acceptable HCl/HF reference methods (RM) are Methods 26 and 26A in appendix A–8 to part 60 of this chapter, Method 320 in Appendix A to this part, or ASTM D6348–03 (Reapproved 2010) ''Standard Test Method for Determination of Gaseous Compounds by Extractive Direct Interface Fourier Transform Infrared (FTIR) Spectroscopy'' (incorporated by reference, see §63.14), each applied based on the criteria set forth in Table 5 of this subpart.

3.1.2.1 When ASTM D6348–03 is used as the RM, the following conditions must be met:

3.1.2.1.1 The test plan preparation and implementation in the Annexes to ASTM D6348–03, Sections A1 through A8 are mandatory;

3.1.2.1.2 In ASTM D6348–03 Annex A5 (Analyte Spiking Technique), the percent (%) R must be determined for each target analyte (see Equation A5.5);

3.1.2.1.3 For the ASTM D6348–03 test data to be acceptable for a target analyte, %R must be 70% ≤R ≤130%; and

3.1.2.1.4 The %R value for each compound must be reported in the test report and all field measurements corrected with the calculated %R value for that compound using the following equation:

$$\text{Reported Result} = \frac{(\text{Measured Concentration in Stack})}{\%\text{R}} x\,100 \qquad \text{(Eq. B-1)}$$

3.1.2.2 The relative accuracy (RA) of the HCl or HF CEMS must be no greater than 20 percent of the mean value of the RM test data in units of ppm on the same moisture basis. Alternatively, if the mean RM value is less than 1.0 ppm, the RA results are acceptable if the absolute value of the difference between the mean RM and CEMS values does not exceed 0.20 ppm.

3.2 If you choose to follow PS 18 of appendix B to part 60 of this chapter, then your HCl CEMS must be certified according to PS 18, sections 7.0, 8.0, 11.0, 12.0, and 13.0.

3.3 Any additional stack gas flow rate, diluent gas, and moisture monitoring system(s) needed to express pollutant concentrations in units of the applicable emissions limit must be certified according to part 75 of this chapter.

4. RECERTIFICATION PROCEDURES

Whenever the owner or operator makes a replacement, modification, or change to a certified CEMS that may significantly affect the ability of the system to accurately measure or record pollutant or diluent gas concentrations, stack gas flow rates, or stack gas moisture content, the owner or operator shall recertify the monitoring system. Furthermore, whenever the owner or operator makes a replacement, modification, or change to the flue gas handling system or the unit operation that may significantly change the concentration or flow profile, the owner or operator shall recertify the monitoring system. The same tests performed for the initial certification of the monitoring system shall be repeated for recertification, unless otherwise specified by the Administrator. Examples of changes that require recertification include: Replacement of a gas analyzer; complete monitoring system replacement, and changing the location or orientation of the sampling probe.

5. ON-GOING QUALITY ASSURANCE REQUIREMENTS

On-going QA test requirements for HCl and HF CEMS must be implemented as follows:

5.1 If you choose to follow Performance Specification 15 (PS 15) of appendix B to part 60 of this chapter, then the quality assurance/quality control procedures of PS 15 shall apply as set forth in sections 5.1.1 through 5.1.3 and 5.4.2 of this appendix.

5.1.1 On a daily basis, you must assess the calibration error of the HCl or HF CEMS using either a calibration transfer standard as specified in Performance Specification 15 Section 10.1 which references Section 4.5 of the FTIR Protocol or a HCl and/or HF calibration gas at a concentration no greater than two times the level corresponding to the applicable emission limit. A calibration transfer standard is a substitute calibration compound chosen to ensure that the FTIR is performing well at the wavelength regions used for analysis of the target analytes. The measured concentration of the calibration transfer standard or HCl and/or HF calibration gas results must agree within ±5 percent of the reference gas value after correction for differences in pressure.

5.1.2 On a quarterly basis, you must conduct a gas audit of the HCl and/or HF CEMS as described in section 3.1.1 of this appendix. For the purposes of this appendix, ''quarterly'' means once every ''QA operating quarter'' (as defined in section 3.1.20 of appendix A to this subpart). You have the option to use HCl gas in lieu of HF gas for conducting this audit on an HF CEMS. To the extent practicable, perform consecutive quarterly gas audits at least 30 days apart. The initial quarterly audit is due in the first QA operating quarter following the calendar quarter in which certification testing of the CEMS is successfully completed. Up to three consecutive exemptions from the quarterly audit requirement are allowed for ''non-QA operating quarters'' (*i.e.*, calendar quarters in which there are less than 168 unit or stack operating hours). However, no more than four consecutive calendar quarters may elapse without performing a gas audit, except as otherwise provided in section 5.4.2.2.1 of this appendix.

5.1.3 You must perform an annual relative accuracy test audit or RATA of the HCl or HF CEMS as described in section 3.1.2 of this appendix. Perform the RATA at normal load. For the purposes of this appendix, ''annual'' means once every four ''QA operating quarters'' (as defined in section 3.1.20 of appendix A to this subpart). The first annual RATA is due within four QA operating quarters following the calendar quarter in which the initial certification testing of the HCl or HF CEMS is successfully completed. The provisions in section 5.1.2.4 of appendix A to this subpart pertaining to RATA deadline extensions also apply.

5.2 If you choose to follow Performance Specification PS 18 of appendix B to part 60 of this chapter, then the quality assurance/quality control procedures in Procedure 6 of appendix F to part 60 of this chapter shall apply. The quarterly and annual QA tests required under Procedure 6 shall be performed, respectively, at the frequencies specified in sections 5.1.2 and 5.1.3 of this appendix.

5.3 Stack gas flow rate, diluent gas, and moisture monitoring systems must meet the applicable on-going QA test requirements of part 75 of this chapter.

5.3.1 *Out-of-Control Periods.* A HCl or HF CEMS that is used to provide data under this appendix is considered to be out-of-control, and data from the CEMS may not be reported as quality-assured, when any acceptance criteria for a required QA test is not met. The HCl or HF CEMS is also considered to be out-of-control when a required QA test is not performed on schedule or within an allotted grace period. To end an out-of-control period, the QA test that was either failed or not done on time must be performed and passed. Out-of-control periods are counted as hours of monitoring system downtime.

5.3.2 *Grace Periods.* For the purposes of this appendix, a ''grace period'' is defined as a specified number of unit or stack operating hours after the deadline for a required quality-assurance test of a continuous monitor has passed, in which the test may be performed and passed without loss of data.

5.3.2.1 For the flow rate, diluent gas, and moisture monitoring systems described in section 5.2 of this appendix, a 168 unit or stack operating hour grace period is available for quarterly linearity checks, and a 720 unit or stack operating hour grace period is available for RATAs, as provided, respectively, in sections 2.2.4 and 2.3.3 of appendix B to part 75 of this chapter.

5.3.2.2 For the purposes of this appendix, if the deadline for a required gas audit or RATA of a HCl or HF CEMS cannot be met due to circumstances beyond the control of the owner or operator:

5.3.2.2.1 A 168 unit or stack operating hour grace period is available in which to perform the gas audit; or

5.3.2.2.2 A 720 unit or stack operating hour grace period is available in which to perform the RATA.

5.3.2.3 If a required QA test is performed during a grace period, the deadline for the next test shall be determined as follows:

5.3.2.3.1 For a gas audit or RATA of the monitoring systems described in section 5.1 of this appendix, determine the deadline for the next gas audit or RATA (as applicable) in accordance with section 2.2.4(b) or 2.3.3(d) of appendix B to part 75 of this chapter; treat a gas audit in the same manner as a linearity check.

5.3.2.3.2 For the gas audit of a HCl or HF CEMS, the grace period test only satisfies the audit requirement for the calendar quarter in which the test was originally due. If the calendar quarter in which the grace period audit is performed is a QA operating quarter, an additional gas audit is required for that quarter.

5.3.2.3.3 For the RATA of a HCl or HF CEMS, the next RATA is due within three QA operating quarters after the calendar quarter in which the grace period test is performed.

5.3.3 *Conditional Data Validation* For recertification and diagnostic testing of the monitoring systems that are used to provide data under this appendix, and for the required QA tests when non-redundant backup monitoring systems or temporary like-kind replacement analyzers are brought into service, the conditional data validation provisions in §§75.20(b)(3)(ii) through (b)(3)(ix) of this chapter may be used to avoid or minimize data loss. The allotted window of time to complete calibration tests and RATAs shall be as specified in §75.20(b)(3)(iv) of this chapter; the allotted window of time to complete a gas audit shall be the same as for a linearity check (*i.e.*, 168 unit or stack operating hours).

5.4 *Data Validation.*

5.4.1 *Out-of-Control Periods.* An HCl or HF CEMS that is used to provide data under this appendix is considered to be out-of-control, and data from the CEMS may not be reported as quality-assured, when any acceptance criteria for a required QA test is not met. The HCl or HF CEMS is also considered to be out-of-control when a required QA test is not performed on schedule or within an allotted grace period. To end an out-of-control period, the QA test that was either failed or not done on time must be performed and passed. Out-of-control periods are counted as hours of monitoring system downtime.

5.4.2 *Grace Periods.* For the purposes of this appendix, a ''grace period'' is defined as a specified number of unit or stack operating hours after the deadline for a required quality-assurance test of a continuous monitor has passed, in which the test may be performed and passed without loss of data.

5.4.2.1 For the monitoring systems described in section 5.3 of this appendix, a 168 unit or stack operating hour grace period is available for quarterly linearity checks, and a 720 unit or stack operating hour grace period is available for RATAs, as provided, respectively, in sections 2.2.4 and 2.3.3 of appendix B to part 75 of this chapter.

5.4.2.2 For the purposes of this appendix, if the deadline for a required gas audit/data accuracy assessment or RATA of an HCl CEMS cannot be met due to circumstances beyond the control of the owner or operator:

5.4.2.2.1 A 168 unit or stack operating hour grace period is available in which to perform the gas audit or other quarterly data accuracy assessment; or

5.4.2.2.2 A 720 unit or stack operating hour grace period is available in which to perform the RATA.

5.4.2.3 If a required QA test is performed during a grace period, the deadline for the next test shall be determined as follows:

5.4.2.3.1 For a gas audit or RATA of the monitoring systems described in sections 5.1 and 5.2 of this appendix, determine the deadline for the next gas audit or RATA (as applicable) in accordance with section 2.2.4(b) or 2.3.3(d) of appendix B to part 75 of this chapter; treat a gas audit in the same manner as a linearity check.

5.4.2.3.2 For the gas audit or other quarterly data accuracy assessment of an HCl or HF CEMS, the grace period test only satisfies the audit requirement for the calendar quarter in which the test was originally due. If the calendar quarter in which the grace period audit is performed is a QA operating quarter, an additional gas audit/data accuracy assessment is required for that quarter.

5.4.2.3.3 For the RATA of an HCl or HF CEMS, the next RATA is due within three QA operating quarters after the calendar quarter in which the grace period test is performed.

5.4.3 *Conditional Data Validation.* For recertification and diagnostic testing of the monitoring systems that are used to provide data under this appendix, the conditional data validation provisions in §75.20(b)(3)(ii) through (ix) of this chapter may be used to

avoid or minimize data loss. The allotted window of time to complete calibration tests and RATAs shall be as specified in §75.20(b)(3)(iv) of this chapter; the allotted window of time to complete a quarterly gas audit or data accuracy assessment shall be the same as for a linearity check (*i.e.*, 168 unit or stack operating hours).

6. MISSING DATA REQUIREMENTS

For the purposes of this appendix, the owner or operator of an affected unit shall not substitute for missing data from HCl or HF CEMS. Any process operating hour for which quality-assured HCl or HF concentration data are not obtained is counted as an hour of monitoring system downtime.

7. BIAS ADJUSTMENT

Bias adjustment of hourly emissions data from a HCl or HF CEMS is not required.

8. QA/QC PROGRAM REQUIREMENTS

The owner or operator shall develop and implement a quality assurance/quality control (QA/QC) program for the HCl and/or HF CEMS that are used to provide data under this subpart. At a minimum, the program shall include a written plan that describes in detail (or that refers to separate documents containing) complete, step-by-step procedures and operations for the most important QA/QC activities. Electronic storage of the QA/QC plan is permissible, provided that the information can be made available in hard copy to auditors and inspectors. The QA/QC program requirements for the other monitoring systems described in section 5.3 of this appendix are specified in section 1 of appendix B to part 75 of this chapter.

8.1 *General Requirements for HCl and HF CEMS.*

8.1.1 *Preventive Maintenance.* Keep a written record of procedures needed to maintain the HCl and/or HF CEMS in proper operating condition and a schedule for those procedures. This shall, at a minimum, include procedures specified by the manufacturers of the equipment and, if applicable, additional or alternate procedures developed for the equipment.

8.1.2 *Recordkeeping and Reporting.* Keep a written record describing procedures that will be used to implement the recordkeeping and reporting requirements of this appendix.

8.1.3 *Maintenance Records.* Keep a record of all testing, maintenance, or repair activities performed on any HCl or HF CEMS in a location and format suitable for inspection. A maintenance log may be used for this purpose. The following records should be maintained: Date, time, and description of any testing, adjustment, repair, replacement, or preventive maintenance action performed on any monitoring system and records of any corrective actions associated with a monitor outage period. Additionally, any adjustment that may significantly affect a system's ability to accurately measure emissions data must be recorded and a written explanation of the procedures used to make the adjustment(s) shall be kept.

8.2 *Specific Requirements for HCl and HF CEMS.* The following requirements are specific to HCl and HF CEMS:

8.2.1 Keep a written record of the procedures used for each type of QA test required for each HCl and HF CEMS. Explain how the results of each type of QA test are calculated and evaluated.

8.2.2 Explain how each component of the HCl and/or HF CEMS will be adjusted to provide correct responses to calibration gases after routine maintenance, repairs, or corrective actions.

9. DATA REDUCTION AND CALCULATIONS

9.1 Design and operate the HCl and/or HF CEMS to complete a minimum of one cycle of operation (sampling, analyzing, and data recording) for each successive 15-minute period.

9.2 Reduce the HCl and/or HF concentration data to hourly averages in accordance with §60.13(h)(2) of this chapter.

9.3 Convert each hourly average HCl or HF concentration to an HCl or HF emission rate expressed in units of the applicable emissions limit.

9.3.1 For heat input-based emission rates, select an appropriate emission rate equation from among Equations 19–1 through 19–9 in EPA Method 19 in Appendix A–7 to part 60 of this chapter, to calculate the HCl or HF emission rate in lb/MMBtu. Multiply the HCl concentration value (ppm) by $9.43 \times 10^{-8}$ to convert it to lb/scf, for use in the applicable Method 19 equation. For HF, the conversion constant from ppm to lb/scf is $5.18 \times 10^{-8}$. The appropriate diluent cap value from section 6.2.1.2 of Appendix A to this subpart may be used to calculate the HCl or HF emission rate (lb/MMBtu) during startup or shutdown hours.

9.3.2 For gross output-based emission rates, first calculate the HCl or HF mass emission rate (lb/h), using an equation that has the general form of Equation A–2 or A–3 in appendix A to this subpart (as applicable), replacing the value of K with $9.43 \times 10^{-8}$ lb/scf-ppm (for HCl) or $5.18 \times 10^{-8}$ (for HF) and defining $C_h$ as the hourly average HCl or HF concentration in ppm. Then, divide the result by the hourly gross output (megawatts) to convert it to units of lb/MWh. If the gross output is zero during a startup or shutdown hour, use the default gross output (as defined in §63.10042) to calculate the HCl or HF emission rate. The default gross output is not considered to be a substitute data value.

9.4 Use Equation A–5 in appendix A of this subpart to calculate the required 30-boiler

operating day rolling average HCl or HF emission rates. Report each 30-boiler operating day rolling average to the same precision as the standard (*i.e.*, with one leading non-zero digit and one decimal place), expressed in scientific notation. The term $E_{ho}$ in Equation A–5 must be in the units of the applicable emissions limit.

10. RECORDKEEPING REQUIREMENTS

10.1 For each HCl or HF CEMS installed at an affected source, and for any other monitoring system(s) needed to convert pollutant concentrations to units of the applicable emissions limit, the owner or operator must maintain a file of all measurements, data, reports, and other information required by this appendix in a form suitable for inspection, for 5 years from the date of each record, in accordance with §63.10033. The file shall contain the information in paragraphs 10.1.1 through 10.1.8 of this section.

10.1.1 *Monitoring Plan Records*. For each affected unit or group of units monitored at a common stack, the owner or operator shall prepare and maintain a monitoring plan for the HCl and/or HF CEMS and any other monitoring system(s) (*i.e*, flow rate, diluent gas, or moisture systems) needed to convert pollutant concentrations to units of the applicable emission standard. The monitoring plan shall contain essential information on the continuous monitoring systems and shall explain how the data derived from these systems ensure that all HCl or HF emissions from the unit or stack are monitored and reported.

10.1.1.1 *Updates*. Whenever the owner or operator makes a replacement, modification, or change in a certified continuous HCl or HF monitoring system that is used to provide data under this subpart (including a change in the automated data acquisition and handling system or the flue gas handling system) which affects information reported in the monitoring plan (e.g., a change to a serial number for a component of a monitoring system), the owner or operator shall update the monitoring plan.

10.1.1.2 *Contents of the Monitoring Plan*. For HCl and/or HF CEMS, the monitoring plan shall contain the applicable electronic and hard copy information in sections 10.1.1.2.1 and 10.1.1.2.2 of this appendix. For stack gas flow rate, diluent gas, and moisture monitoring systems, the monitoring plan shall include the electronic and hard copy information required for those systems under §75.53 (g) of this chapter. The electronic monitoring plan shall be evaluated using the ECMPS Client Tool.

10.1.1.2.1 *Electronic*. Record the unit or stack ID number(s); monitoring location(s); the HCl or HF monitoring methodology used (*i.e.*, CEMS); HCl or HF monitoring system information, including, but not limited to: unique system and component ID numbers; the make, model, and serial number of the monitoring equipment; the sample acquisition method; formulas used to calculate emissions; monitor span and range information (if applicable).

10.1.1.2.2 *Hard Copy*. Keep records of the following: schematics and/or blueprints showing the location of the monitoring system(s) and test ports; data flow diagrams; test protocols; monitor span and range calculations (if applicable); miscellaneous technical justifications.

10.1.2 *Operating Parameter Records*. For the purposes of this appendix, the owner or operator shall record the following information for each operating hour of each affected unit or group of units utilizing a common stack, to the extent that these data are needed to convert pollutant concentration data to the units of the emission standard. For non-operating hours, record only the items in paragraphs 10.1.2.1 and 10.1.2.2 of this section. If there is heat input to the unit(s), but no electrical load, record only the items in paragraphs 10.1.2.1, 10.1.2.2, and (if applicable) 10.1.2.4 of this section.

10.1.2.1 The date and hour;

10.1.2.2 The unit or stack operating time (rounded up to the nearest fraction of an hour (in equal increments that can range from one hundredth to one quarter of an hour, at the option of the owner or operator);

10.1.2.3 The hourly gross unit load (rounded to nearest MWge); and

10.1.2.4 If applicable, the F-factor used to calculate the heat input-based pollutant emission rate.

10.1.2.5 If applicable, a flag to indicate that the hour is a startup or shutdown hour (as defined in §63.10042).

10.1.3 *HCl and/or HF Emissions Records*. For HCl and/or HF CEMS, the owner or operator must record the following information for each unit or stack operating hour:

10.1.3.1 The date and hour;

10.1.3.2 Monitoring system and component identification codes, as provided in the electronic monitoring plan, for each hour in which the CEMS provides a quality-assured value of HCl or HF concentration (as applicable);

10.1.3.3 The pollutant concentration, for each hour in which a quality-assured value is obtained. For HCl and HF, record the data in parts per million (ppm), with one leading non-zero digit and one decimal place, expressed in scientific notation. Use the following rounding convention: If the digit immediately following the first decimal place is 5 or greater, round the first decimal place upward (increase it by one); if the digit immediately following the first decimal place is 4 or less, leave the first decimal place unchanged.

10.1.3.4 A special code, indicating whether or not a quality-assured HCl or HF concentration value is obtained for the hour.

This code may be entered manually when a temporary like-kind replacement HCl or HF analyzer is used for reporting; and

10.1.3.5 Monitor data availability, as a percentage of unit or stack operating hours, calculated according to §75.32 of this chapter.

10.1.4 *Stack Gas Volumetric Flow Rate Records.*

10.1.4.1 Hourly measurements of stack gas volumetric flow rate during unit operation are required to demonstrate compliance with electrical output-based HCl or HF emissions limits (*i.e.*, lb/MWh or lb/GWh).

10.1.4.2 Use a flow rate monitor that meets the requirements of part 75 of this chapter to record the required data. You must keep hourly flow rate records, as specified in §75.57(c)(2) of this chapter.

10.1.5 *Records of Stack Gas Moisture Content.*

10.1.5.1 Correction of hourly pollutant concentration data for moisture is sometimes required when converting concentrations to the units of the applicable Hg emissions limit. In particular, these corrections are required:

10.1.5.1.1 To calculate electrical output-based pollutant emission rates, when using a CEMS that measures pollutant concentrations on a dry basis; and

10.1.5.1.2 To calculate heat input-based pollutant emission rates, when using certain equations from EPA Method 19 in appendix A–7 to part 60 of this chapter.

10.1.5.2 If hourly moisture corrections are required, either use a fuel-specific default moisture percentage for coal-fired units from §75.11(b)(1) of this chapter, an Administrator approved default moisture value for non-coal-fired units (as per paragraph 63.10010(d) of this subpart), or a certified moisture monitoring system that meets the requirements of part 75 of this chapter, to record the required data. If you elect to use a moisture monitoring system, you must keep hourly records of the stack gas moisture content, as specified in §75.57(c)(3) of this chapter.

10.1.6 *Records of Diluent Gas ($CO_2$ or $O_2$) Concentration.*

10.1.6.1 To assess compliance with a heat input-based HCl or HF emission rate limit in units of lb/MMBtu, hourly measurements of $CO_2$ or $O_2$ concentration are required to convert pollutant concentrations to units of the standard.

10.1.6.2 If hourly measurements of diluent gas concentration are needed, you must use a certified $CO_2$ or $O_2$ monitor that meets the requirements of part 75 of this chapter to record the required data. For all diluent gas monitors, you must keep hourly $CO_2$ or $O_2$ concentration records, as specified in §75.57(g) of this chapter.

10.1.7 *HCl and HF Emission Rate Records.* For applicable HCl and HF emission limits in units of lb/MMBtu, lb/MWh, or lb/GWh, record the following information for each affected unit or common stack:

10.1.7.1 The date and hour;

10.1.7.2 The hourly HCl and/or HF emissions rate (lb/MMBtu, or lb/MWh, as applicable), for each hour in which valid values of HCl or HF concentration and all other required parameters (stack gas volumetric flow rate, diluent gas concentration, electrical load, and moisture data, as applicable) are obtained for the hour. Round off the emission rate to the same precision as the standard (*i.e.*, with one leading non-zero digit and one decimal place, expressed in scientific notation). Use the following rounding convention: If the digit immediately following the first decimal place is 5 or greater, round the first decimal place upward (increase it by one); if the digit immediately following the first decimal place is 4 or less, leave the first decimal place unchanged;

10.1.7.3 An identification code for the formula used to derive the hourly HCl or HF emission rate from HCl or HF concentration, flow rate, electrical load, diluent gas concentration, and moisture data (as applicable); and

10.1.7.4 A code indicating that the HCl or HF emission rate was not calculated for the hour, if valid data for HCl or HF concentration and/or any of the other necessary parameters are not obtained for the hour. For the purposes of this appendix, the substitute data values required under part 75 of this chapter for diluent gas concentration, stack gas flow rate and moisture content are not considered to be valid data.

10.1.7.5 If applicable, a code to indicate that the default electrical load (as defined in §63.10042) was used to calculate the HCl or HF emission rate.

10.1.7.6 If applicable, a code to indicate that the diluent cap (as defined in §63.10042) was used to calculate the HCl or HF emission rate.

10.1.8 *Certification and Quality Assurance Test Records.* For the HCl and/or HF CEMS used to provide data under this subpart at each affected unit (or group of units monitored at a common stack), record the following information for all required certification, recertification, diagnostic, and quality-assurance tests:

10.1.8.1 *HCl and HF CEMS.*

10.1.8.1.1 For each required 7-day and daily calibration drift test or daily calibration error test (including daily calibration transfer standard tests) of the HCl or HF CEMS, record the test date(s) and time(s), reference gas value(s), monitor response(s), and calculated calibration drift or calibration error value(s). If you use the dynamic spiking option for the mid-level calibration drift check under PS–18, you must also record the measured concentration of the native HCl in the flue gas before and after the spike and the spiked gas dilution factor.

When using an IP–CEMS under PS–18, you must also record the measured concentrations of the native HCl before and after introduction of each reference gas, the path lengths of the calibration cell and the stack optical path, the stack and calibration cell temperatures, the instrument line strength factor, and the calculated equivalent concentration of reference gas.

10.1.8.1.2 For the required gas audits of an FTIR HCl or HF CEMS that is following PS 15, record the date and time of each spiked and unspiked sample, the audit gas reference values and uncertainties. Keep records of all calculations and data analyses required under sections 9.1 and 12.1 of Performance Specification 15, and the results of those calculations and analyses.

10.1.8.1.3 For each required RATA of an HCl or HF CEMS, record the beginning and ending date and time of each test run, the reference method(s) used, and the reference method and HCl or HF CEMS run values. Keep records of stratification tests performed (if any), all of the raw field data, relevant process operating data, and all of the calculations used to determine the relative accuracy.

10.1.8.1.4 For each required beam intensity test of an HCl IP–CEMS under PS–18, record the test date and time, the known attenuation value (%) used for the test, the concentration of the high-level reference gas used, the full-beam and attenuated beam intensity levels, the measured HCl concentrations at full-beam intensity and attenuated intensity and the percent difference between them, and the results of the test. For each required daily beam intensity check of an IP–CEMS under Procedure 6, record the beam intensity measured including the units of measure and the results of the check.

10.1.8.1.5 For each required measurement error (ME) test of an HCl monitor, record the date and time of each gas injection, the reference gas concentration (low, mid, or high) and the monitor response for each of the three injections at each of the three levels. Also record the average monitor response and the ME at each gas level and the related calculations. For ME tests conducted on IP–CEMS, also record the measured concentrations of the native HCl before and after introduction of each reference gas, the path lengths of the calibration cell and the stack optical path, the stack and calibration cell temperatures, the stack and calibration cell pressures, the instrument line strength factor, and the calculated equivalent concentration of reference gas.

10.1.8.1.6 For each required level of detection (LOD) test of an HCl monitor performed in a controlled environment, record the test date, the concentrations of the reference gas and interference gases, the results of the seven (or more) consecutive measurements of HCl, the standard deviation, and the LOD value. For each required LOD test performed in the field, record the test date, the three measurements of the native source HCl concentration, the results of the three independent standard addition (SA) measurements known as standard addition response (SAR), the effective spike addition gas concentration (for IP–CEMS, the equivalent concentration of the reference gas), the resulting standard addition detection level (SADL) value and all related calculations. For extractive CEMS performing the SA using dynamic spiking, you must record the spiked gas dilution factor.

10.1.8.1.7 For each required ME/level of detection response time test of an HCl monitor, record the test date, the native HCl concentration of the flue gas, the reference gas value, the stable reference gas readings, the upscale/downscale start and end times, and the results of the upscale and downscale stages of the test.

10.1.8.1.8 For each required temperature or pressure measurement verification or audit of an IP–CEMS, keep records of the test date, the temperatures or pressures (as applicable) measured by the calibrated temperature or pressure reference device and the IP–CEMS, and the results of the test.

10.1.8.1.9 For each required interference test of an HCl monitor, record (or obtain from the analyzer manufacturer records of): The date of the test; the gas volume/rate, temperature, and pressure used to conduct the test; the HCl concentration of the reference gas used; the concentrations of the interference test gases; the baseline HCl and HCl responses for each interferent combination spiked; and the total percent interference as a function of span or HCl concentration.

10.1.8.1.10 For each quarterly relative accuracy audit (RAA) of an HCl monitor, record the beginning and ending date and time of each test run, the reference method used, the HCl concentrations measured by the reference method and CEMS for each test run, the average concentrations measured by the reference method and the CEMS, and the calculated relative accuracy. Keep records of the raw field data, relevant process operating data, and the calculations used to determine the relative accuracy.

10.1.8.1.11 For each quarterly cylinder gas audit (CGA) of an HCl monitor, record the date and time of each injection, and the reference gas concentration (zero, mid, or high) and the monitor response for each injection. Also record the average monitor response and the calculated ME at each gas level. For IP–CEMS, you must also record the measured concentrations of the native HCl before and after introduction of each reference gas, the path lengths of the calibration cell and the stack optical path, the stack and calibration cell temperatures, the stack and calibration cell pressures, the instrument line

strength factor, and the calculated equivalent concentration of reference gas.

10.1.8.1.12 For each quarterly dynamic spiking audit (DSA) of an HCl monitor, record the date and time of the zero gas injection and each spike injection, the results of the zero gas injection, the gas concentrations (mid and high) and the dilution factors and the monitor response for each of the six upscale injections as well as the corresponding native HCl concentrations measured before and after each injection. Also record the average dynamic spiking error for each of the upscale gases, the calculated average DSA Accuracy at each upscale gas concentration, and all calculations leading to the DSA Accuracy.

10.1.8.2 *Additional Monitoring Systems.* For the stack gas flow rate, diluent gas, and moisture monitoring systems described in section 3.2 of this appendix, you must keep records of all certification, recertification, diagnostic, and on-going quality-assurance tests of these systems, as specified in §75.59(a) of this chapter.

## 11. Reporting Requirements

11.1 *General Reporting Provisions.* The owner or operator shall comply with the following requirements for reporting HCl and/or HF emissions from each affected unit (or group of units monitored at a common stack):

11.1.1 Notifications, in accordance with paragraph 11.2 of this section;

11.1.2 Monitoring plan reporting, in accordance with paragraph 11.3 of this section;

11.1.3 Certification, recertification, and QA test submittals, in accordance with paragraph 11.4 of this section; and

11.1.4 Electronic quarterly report submittals, in accordance with paragraph 11.5 of this section.

11.2 *Notifications.* The owner or operator shall provide notifications for each affected unit (or group of units monitored at a common stack) in accordance with §63.10030.

11.3 *Monitoring Plan Reporting.* For each affected unit (or group of units monitored at a common stack) using HCl and/or HF CEMS, the owner or operator shall make electronic and hard copy monitoring plan submittals as follows:

11.3.1 For an EGU that begins reporting hourly HCl and/or HF concentrations with a previously-certified CEMS, submit the monitoring plan information in section 10.1.1.2 of this appendix prior to or concurrent with the first required quarterly emissions report. For a new EGU, or for an EGU switching to continuous monitoring of HCl and/or HF emissions after having implemented another allowable compliance option under this subpart, submit the information in section 10.1.1.2 of this appendix at least 21 days prior to the start of initial certification testing of the CEMS. Also submit the monitoring plan information in section 75.53(g) pertaining to any required flow rate, diluent gas, and moisture monitoring systems within the applicable time frame specified in this section, if the required records are not already in place.

11.3.2 Update the monitoring plan when required, as provided in paragraph 10.1.1.1 of this appendix. An electronic monitoring plan information update must be submitted either prior to or concurrent with the quarterly report for the calendar quarter in which the update is required.

11.3.3 All electronic monitoring plan submittals and updates shall be made to the Administrator using the ECMPS Client Tool. Hard copy portions of the monitoring plan shall be kept on record according to section 10.1 of this appendix.

11.4 *Certification, Recertification, and Quality-Assurance Test Reporting Requirements.* Except for daily QA tests (*i.e.*, calibrations and flow monitor interference checks), which are included in each electronic quarterly emissions report, use the ECMPS Client Tool to submit the results of all required certification, recertification, quality-assurance, and diagnostic tests of the monitoring systems required under this appendix electronically. Submit the test results either prior to or concurrent with the relevant quarterly electronic emissions report. However, for RATAs of the HCl monitor, if this is not possible, you have up to 60 days after the test completion date to submit the test results; in this case, you may claim provisional status for the emissions data affected by the test, starting from the date and hour in which the test was completed and continuing until the date and hour in which the test results are submitted. If the test is successful, the status of the data in that time period changes from provisional to quality-assured, and no further action is required. However, if the test is unsuccessful, the provisional data must be invalidated and resubmission of the affected emission report(s) is required.

11.4.1 For each daily calibration drift (or calibration error) assessment (including daily calibration transfer standard tests), and for each 7-day calibration drift test of an HCl or HF monitor, report:

11.4.1.1 Facility ID information;

11.4.1.2 The monitoring component ID;

11.4.1.3 The instrument span and span scale;

11.4.1.4 For each gas injection, the date and time, the calibration gas level (zero, mid or other), the reference gas value (ppm), and the monitor response (ppm);

11.4.1.5 A flag to indicate whether dynamic spiking was used for the upscale value (extractive HCl monitors only);

11.4.1.6 Calibration drift or calibration error (percent of span or reference gas, as applicable);

11.4.1.7 When using the dynamic spiking option, the measured concentration of native HCl before and after each mid-level spike and the spiked gas dilution factor;

11.4.1.8 When using an IP–CEMS, also report the measured concentration of native HCl before and after each upscale measurement, the path lengths of the calibration cell and the stack optical path, the stack and calibration cell temperatures, the stack and calibration cell pressures, the instrument line strength factor, and the equivalent concentration of the reference gas; and

11.4.1.9 Reason for test (for the 7-day CD test, only).

11.4.2 For each quarterly gas audit of an HCl or HF CEMS that is following PS 15, report:

11.4.2.1 Facility ID information;

11.4.2.2 Monitoring system ID number;

11.4.2.3 Type of test (e.g., quarterly gas audit);

11.4.2.4 Reason for test;

11.4.2.5 Certified audit (spike) gas concentration value (ppm);

11.4.2.6 Measured value of audit (spike) gas, including date and time of injection;

11.4.2.7 Calculated dilution ratio for audit (spike) gas;

11.4.2.8 Date and time of each spiked flue gas sample;

11.4.2.9 Date and time of each unspiked flue gas sample;

11.4.2.10 The measured values for each spiked gas and unspiked flue gas sample (ppm);

11.4.2.11 The mean values of the spiked and unspiked sample concentrations and the expected value of the spiked concentration as specified in section 12.1 of Performance Specification 15 (ppm);

11.4.2.12 Bias at the spike level as calculated using equation 3 in section 12.1 of Performance Specification 15; and

11.4.2.13 The correction factor (CF), calculated using equation 6 in section 12.1 of Performance Specification 15.

11.4.3 For each RATA of a HCl or HF CEMS, report:

11.4.3.1 Facility ID information;

11.4.3.2 Monitoring system ID number;

11.4.3.3 Type of test (*i.e.*, initial or annual RATA);

11.4.3.4 Reason for test;

11.4.3.5 The reference method used;

11.4.3.6 Starting and ending date and time for each test run;

11.4.3.7 Units of measure;

11.4.3.8 The measured reference method and CEMS values for each test run, on a consistent moisture basis, in appropriate units of measure;

11.4.3.9 Flags to indicate which test runs were used in the calculations;

11.4.3.10 Arithmetic mean of the CEMS values, of the reference method values, and of their differences;

11.4.3.11 Standard deviation, using either Equation 2–4 in section 12.3 of PS 2 in appendix B to part 60 of this chapter or Equation 10 in section 12.6.5 of PS 18;

11.4.3.12 Confidence coefficient, using either Equation 2–5 in section 12.4 of PS 2 in appendix B to part 60 of this chapter or Equation 11 in section 12.6.6 of PS 18;

11.4.3.13 t-value; and

11.4.3.14 Relative accuracy calculated using Equation 2–6 of Performance Specification 2 in appendix B to part 60 of this chapter or, if applicable, according to the alternative procedure for low emitters described in section 3.1.2.2 of this appendix. If applicable use a flag to indicate that the alternative RA specification for low emitters has been applied.

11.4.4 For each 3-level ME test of an HCl monitor, report:

11.4.4.1 Facility ID information;

11.4.4.2 Monitoring component ID;

11.4.4.3 Instrument span and span scale;

11.4.4.4 For each gas injection, the date and time, the calibration gas level (low, mid, or high), the reference gas value in ppm and the monitor response. When using an IP–CEMS, also report the measured concentration of native HCl before and after each injection, the path lengths of the calibration cell and the stack optical path, the stack and calibration cell temperatures, the stack and calibration cell pressures, the instrument line strength factor, and the equivalent concentration of the reference gas;

11.4.4.5 For extractive CEMS, the mean reference value and mean of measured values at each reference gas level (ppm). For IP–CEMS, the mean of the measured concentration minus the average measured native concentration minus the equivalent reference gas concentration (ppm), at each reference gas level—see Equation 6A in PS 18;

11.4.4.6 ME at each reference gas level; and

11.4.4.7 Reason for test.

11.4.5 Beam intensity tests of an IP CEMS:

11.4.5.1 For the initial beam intensity test described in PS 18 in appendix B to part 60 of this chapter, report:

11.4.5.1.1 Facility ID information;

11.4.5.1.2 Date and time of the test;

11.4.5.1.3 Monitoring system ID;

11.4.5.1.4 Reason for test;

11.4.5.1.5 Attenuation value (%);

11.4.5.1.6 High level gas concentration (ppm);

11.4.5.1.7 Full and attenuated beam intensity levels, including units of measure;

11.4.5.1.8 Measured HCl concentrations at full and attenuated beam intensity (ppm); and

11.4.5.1.9 Percentage difference between the HCl concentrations.

11.4.5.2 For the daily beam intensity check described in Procedure 6 of appendix F to Part 60 of this chapter, report:

11.4.5.2.1 Facility ID information;

11.4.5.2.2 Date and time of the test;

11.4.5.2.3 Monitoring system ID;

11.4.5.2.4 The attenuated beam intensity level (limit) established in the initial test;

11.4.5.2.5 The beam intensity measured during the daily check; and

11.4.5.2.6 Results of the test (pass or fail).

11.4.6 For each temperature or pressure verification or audit of an HCl IP–CEMS, report:

11.4.6.1 Facility ID information;

11.4.6.2 Date and time of the test;

11.4.6.3 Monitoring system ID;

11.4.6.4 Type of verification (temperature or pressure);

11.4.6.5 Stack sensor measured value;

11.4.6.6 Reference device measured value;

11.4.6.7 Results of the test (pass or fail); and

11.4.6.8 Reason for test.

11.4.7 For each interference test of an HCl monitoring system, report:

11.4.7.1 Facility ID information;

11.4.7.2 Date of test;

11.4.7.3 Monitoring system ID;

11.4.7.4 Results of the test (pass or fail);

11.4.7.5 Reason for test; and

11.4.7.6 A flag to indicate whether the test was performed: On this particular monitoring system; on one of multiple systems of the same type; or by the manufacturer on a system with components of the same make and model(s) as this system.

11.4.8 For each LOD test of an HCl monitor, report:

11.4.8.1 Facility ID information;

11.4.8.2 Date of test;

11.4.8.3 Reason for test;

11.4.8.4 Monitoring system ID;

11.4.8.5 A code to indicate whether the test was done in a controlled environment or in the field;

11.4.8.6 HCl reference gas concentration;

11.4.8.7 HCl responses with interference gas (seven repetitions);

11.4.8.8 Standard deviation of HCl responses;

11.4.8.9 Effective spike addition gas concentrations;

11.4.8.10 HCl concentration measured without spike;

11.4.8.11 HCl concentration measured with spike;

11.4.8.12 Dilution factor for spike;

11.4.8.13 The controlled environment LOD value (ppm or ppm-meters);

11.4.8.14 The field determined standard addition detection level (SADL in ppm or ppm-meters); and

11.4.8.15 Result of LDO/SADL test (pass/fail).

11.4.9 For each ME or LOD response time test of an HCl monitor, report:

11.4.9.1 Facility ID information;

11.4.9.2 Date of test;

11.4.9.3 Monitoring component ID;

11.4.9.4 The higher of the upscale or downscale tests, in minutes; and

11.4.9.5 Reason for test.

11.4.10 For each quarterly RAA of an HCl monitor, report:

11.4.10.1 Facility ID information;

11.4.10.2 Monitoring system ID;

11.4.10.3 Begin and end time of each test run;

11.4.10.4 The reference method used;

11.4.10.5 The reference method and CEMS values for each test run, including the units of measure;

11.4.10.6 The mean reference method and CEMS values for the three test runs;

11.4.10.7 The calculated relative accuracy, percent; and

11.4.10.8 Reason for test.

11.4.11 For each quarterly cylinder gas audit of an HCl monitor, report:

11.4.11.1 Facility ID information;

11.4.11.2 Monitoring component ID;

11.4.11.3 Instrument span and span scale;

11.4.11.4 For each gas injection, the date and time, the reference gas level (zero, mid, or high), the reference gas value in ppm, and the monitor response. When using an IP–CEMS, also report the measured concentration of native HCl before and after each injection, the path lengths of the calibration cell and the stack optical path, the stack and calibration cell temperatures, the stack and calibration cell pressures, the instrument line strength factor, and the equivalent concentration of the reference gas;

11.4.11.5 For extractive CEMS, the mean reference gas value and mean monitor response at each reference gas level (ppm). For IP–CEMS, the mean of the measured concentration minus the average measured native concentration minus the equivalent reference gas concentration (ppm), at each reference gas level -see Equation 6A in PS 18;

11.4.11.6 ME at each reference gas level; and

11.4.11.7 Reason for test.

11.4.12 For each quarterly DSA of an HCl monitor, report:

11.4.12.1 Facility ID information;

11.4.12.2 Monitoring component ID;

11.4.12.3 Instrument span and span scale;

11.4.12.4 For the zero gas injection, the date and time, and the monitor response (*Note:* The zero gas injection from a calibration drift check performed on the same day as the upscale spikes may be used for this purpose.);

11.4.12.5 Zero spike error;

11.4.12.6 For the upscale gas spiking, the date and time of each spike, the reference gas level (mid- or high-), the reference gas value (ppm), the dilution factor, the native HCl concentrations before and after each

spike, and the monitor response for each gas spike;

11.4.12.7 Upscale spike error;

11.4.12.8 DSA at the zero level and at each upscale gas level; and

11.4.12.9 Reason for test.

11.4.13 *Reporting Requirements for Diluent Gas, Flow Rate, and Moisture Monitoring Systems.* For the certification, recertification, diagnostic, and QA tests of stack gas flow rate, moisture, and diluent gas monitoring systems that are certified and quality-assured according to part 75 of this chapter, report the information in section 10.1.8.2 of this appendix.

11.5 *Quarterly Reports.*

11.5.1 The owner or operator of any affected unit shall use the ECMPS Client Tool to submit electronic quarterly reports to the Administrator in an XML format specified by the Administrator, for each affected unit (or group of units monitored at a common stack). If the certified HCl or HF CEMS is used for the initial compliance demonstration, HCl or HF emissions reporting shall begin with the first operating hour of the 30-boiler operating day compliance demonstration period. Otherwise, HCl or HF emissions reporting shall begin with the first operating hour after successfully completing all required certification tests of the CEMS.

11.5.2 The electronic reports must be submitted within 30 days following the end of each calendar quarter, except for units that have been placed in long-term cold storage.

11.5.3 Each electronic quarterly report shall include the following information:

11.5.3.1 The date of report generation;

11.5.3.2 Facility identification information;

11.5.3.3 The information in sections 10.1.2 through 10.1.7 of this appendix, as applicable to the type(s) of monitoring system(s) used to measure the pollutant concentrations and other necessary parameters.

11.5.3.4 The results of all daily calibrations (including calibration transfer standard tests) of the HCl or HF monitor as described in section 10.1.8.1.1 of this appendix; and

11.5.3.5 If applicable, the results of all daily flow monitor interference checks, in accordance with section 10.1.8.2 of this appendix.

11.5.4 *Compliance Certification.* Based on reasonable inquiry of those persons with primary responsibility for ensuring that all HCl and/or HF emissions from the affected unit(s) have been correctly and fully monitored, the owner or operator shall submit a compliance certification in support of each electronic quarterly emissions monitoring report. The compliance certification shall include a statement by a responsible official with that official's name, title, and signature, certifying that, to the best of his or her knowledge, the report is true, accurate, and complete.

[77 FR 9464, Feb. 16, 2012, as amended at 78 FR 24094, Apr. 24, 2013; 79 FR 68795, Nov. 19, 2014; 81 FR 20205, Apr. 6, 2016; 85 FR 55766, Sept. 9, 2020]

## APPENDIX C TO SUBPART UUUUU OF PART 63—PM MONITORING PROVISIONS

### 1. General Provisions

1.1 *Applicability.* These monitoring provisions apply to the continuous measurement of filterable PM emissions from affected EGUs under this subpart. A PM CEMS is used together with other CMS and (as applicable) parametric measurement devices to quantify PM emissions in units of the applicable standard (*i.e.*, lb/MMBtu or lb/MWh).

1.2 *Initial Certification and Recertification Procedures.*

You, as the owner or operator of an affected EGU that uses a PM CEMS to demonstrate compliance with a filterable PM emissions limit in Table 1 or 2 to this subpart must certify and, if applicable, recertify the CEMS according to PS–11 in appendix B to part 60 of this chapter.

1.3 *Quality Assurance and Quality Control Requirements.* You must meet the applicable quality assurance requirements of Procedure 2 in appendix F to part 60 of this chapter.

1.4 *Missing Data Procedures.* You must not substitute data for missing data from the PM CEMS. Any process operating hour for which quality-assured PM concentration data are not obtained is counted as an hour of monitoring system downtime.

1.5 *Adjustments for Flow System Bias.* When the PM emission rate is reported on a gross output basis, you must not adjust the data recorded by a stack gas flow rate monitor for bias, which may otherwise be required under section 75.24 of this chapter.

### 2. Monitoring of PM Emissions

2.1 *Monitoring System Installation Requirements.* Flue gases from the affected EGUs under this subpart vent to the atmosphere through a variety of exhaust configurations including single stacks, common stack configurations, and multiple stack configurations. For each of these configurations, 40 CFR 63.10010(a) specifies the appropriate location(s) at which to install CMS. These CMS installation provisions apply to the PM CEMS and to the other CMS and parametric monitoring devices that provide data for the PM emissions calculations in section 6 of this appendix.

2.2 *Primary and Backup Monitoring Systems.* In the electronic monitoring plan described in section 7 of this appendix, you must create and designate a primary monitoring system for PM and for each additional parameter (*i.e.*, stack gas flow rate, $CO_2$ or $O_2$

concentration, stack gas moisture content, as applicable). The primary system must be used to report hourly PM concentration values when the system is able to provide quality-assured data, *i.e.*, when the system is ''in control.'' However, to increase data availability in the event of a primary monitoring system outage, you may install, operate, maintain, and calibrate a redundant backup monitoring system. A redundant backup system is one that is permanently installed at the unit or stack location and is kept on ''hot standby'' in case the primary monitoring system is unable to provide quality-assured data. You must represent each redundant backup system as a unique monitoring system in the electronic monitoring plan. You must certify each redundant backup monitoring system according to the applicable provisions in section 4 of this appendix. In addition, each redundant monitoring system must meet the applicable ongoing QA requirements in section 5 of this appendix.

## 3. PM Emissions Measurement Methods

The following definitions, equipment specifications, procedures, and performance criteria are applicable

3.1 *Definitions.* All definitions specified in section 3 of PS–11 in appendix B to part 60 of this chapter and section 3 of Procedure 2 in appendix F to part 60 of this chapter are applicable to the measurement of filterable PM emissions from electric utility steam generating units under this subpart. In addition, the following definitions apply:

3.1.1 *Stack operating hour* means a clock hour during which flue gases flow through a particular stack or duct (either for the entire hour or for part of the hour) while the associated unit(s) are combusting fuel.

3.1.2 *Unit operating hour* means a clock hour during which a unit combusts any fuel, either for part of the hour or for the entire hour.

3.2 *Continuous Monitoring Methods.*

3.2.1 Installation and Measurement Location. You must install the PM CEMS according to 40 CFR 63.10010 and Section 2.4 of PS–11.

3.2.2 Units of Measure. For the purposes of this subpart, you shall report hourly PM concentrations in units of measure that correspond to your PM CEMS correlation curve (*e.g.*, mg/acm, mg/acm @ 160 °C, mg/wscm, mg/dscm).

3.2.3 Other Necessary Data Collection. To convert hourly PM concentrations to the units of the applicable emissions standard (*i.e.*, lb/MMBtu or lb/MWh), you must collect additional data as described in sections 3.2.3.1 and 3.2.3.2 of this appendix. You must install, certify, operate, maintain, and quality-assure any stack gas flow rate, $CO_2$, $O_2$, or moisture monitoring systems needed for this purpose according to sections 4 and 5 of this appendix. The calculation methods for the emission limits described in sections 3.2.3.1 and 3.2.3.2 of this appendix are presented in section 6 of this appendix.

3.2.3.1 Heat Input-Based Emission Limits. To demonstrate compliance with a heat input-based PM emission limit in Table 2 to this subpart, you must provide the hourly stack gas $CO_2$ or $O_2$ concentration, along with a fuel-specific $F_c$ factor or dry-basis F-factor and (if applicable) the stack gas moisture content, in order to convert measured PM concentrations values to the units of the standard.

3.2.3.2 Gross Output-Based Emission Limits. To demonstrate compliance with a gross output-based PM emission limit in Table 1 or Table 2 to this subpart, you must provide the hourly gross output in megawatts, along with data from a certified stack gas flow rate monitor and (if applicable) the stack gas moisture content, in order to convert measured PM concentrations values to units of the standard.

## 4. Certification and Recertification Requirements

4.1 *Certification Requirements.* You must certify your PM CEMS and the other CMS used to determine compliance with the applicable emissions standard before the PM CEMS can be used to provide data under this subpart. Redundant backup monitoring systems (if used) are subject to the same certification requirements as the primary systems.

4.1.1 PM CEMS. You must certify your PM CEMS according to PS–11 in appendix B to part 60 of this chapter. A PM CEMS that has been installed and certified according to PS–11 as a result of another state or federal regulatory requirement or consent decree prior to the effective date of this subpart shall be considered certified for this subpart if you can demonstrate that your PM CEMS meets the PS–11 acceptance criteria based on the applicable emission standard in this subpart.

4.1.2 Flow Rate, Diluent Gas, and Moisture Monitoring Systems. You must certify the continuous monitoring systems that are needed to convert PM concentrations to units of the standard or (if applicable) to convert the measured PM concentrations from wet basis to dry basis or vice-versa (*i.e.*, stack gas flow rate, diluent gas ($CO_2$ or $O_2$) concentration, or moisture monitoring systems), in accordance with the applicable provisions in section 75.20 of this chapter and appendix A to part 75 of this chapter.

4.1.3 Other Parametric Measurement Devices. Any temperature or pressure measurement devices that are used to convert hourly PM concentrations to standard conditions must be installed, calibrated, maintained, and operated according to the manufacturers' instructions.

4.2 *Recertification.*

4.2.1 You must recertify your PM CEMS if it is either: moved to a different stack or duct; moved to a new location within the same stack or duct; modified or repaired in such a way that the existing correlation is altered or impacted; or replaced.

4.2.2 The flow rate, diluent gas, and moisture monitoring systems that are used to convert PM concentration to units of the emission standard are subject to the recertification provisions in section 75.20(b) of this chapter.

4.3 *Development of a New or Revised Correlation Curve.* You must develop a new or revised correlation curve if:

4.3.1 An RCA is failed and the new or revised correlation is developed according to section 10.6 in Procedure 2 of appendix F to part 60 of this chapter; or

4.3.2 The events described in paragraph (1) or (2) in section 8.8 of PS–11 occur.

5. Ongoing Quality Assurance (QA) and Data Validation

5.1 *PM CEMS.*

5.1.1 Required QA Tests. Following initial certification, you must conduct periodic QA testing of each primary and (if applicable) redundant backup PM CEMS. The required QA tests and the PS that must be met are found in Procedure 2 of appendix F to part 60 of this chapter (Procedure 2). Except as otherwise provided in section 5.1.2 of this appendix, the QA tests shall be done at the frequency specified in Procedure 2.

5.1.2 RRA and RCA Test Frequencies.

5.1.2.1 The test frequency for RRAs of the PM CEMS shall be annual, *i.e.,* once every 4 calendar quarters. The RRA must either be performed within the fourth calendar quarter after the calendar quarter in which the previous RRA was completed or in a grace period (see section 5.1.3, below). When a required annual RRA is done within a grace period, the deadline for the next RRA is 4 calendar quarters after the quarter in which the RRA was originally due, rather than the calendar quarter in which the grace period test is completed.

5.1.2.2 The test frequency for RCAs of the PM CEMS shall be triennial, *i.e.,* once every 12 calendar quarters. If a required RCA is not completed within 12 calendar quarters after the calendar quarter in which the previous RCA was completed, it must be performed in a grace period immediately following the twelfth calendar quarter (see section 5.1.3, below). When an RCA is done in a grace period, the deadline for the next RCA shall be 12 calendar quarters after the calendar quarter in which the RCA was originally due, rather than the calendar quarter in which the grace period test is completed.

5.1.2.3 Successive quarterly audits (*i.e.,* ACAs and, if applicable, sample volume audits (SVAs)) shall be conducted at least 60 days apart.

5.1.3 Grace Period. A grace period is available, immediately following the end of the calendar quarter in which an RRA or RCA of the PM CEMS is due. The length of the grace period shall be the lesser of 720 EGU (or stack) operating hours or 1 calendar quarter.

5.1.4 RCA and RRA Acceptability. The results of your RRA or RCA are considered acceptable provided that the criteria in section 10.4(5) of Procedure 2 in appendix F to part 60 of this chapter are met for an RCA or section 10.4(6) of Procedure 2 in appendix F to part 60 of this chapter are met for an RRA.

5.1.5 Data Validation. Your PM CEMS is considered to be out-of-control, and you may not report data from it as quality-assured, when, for a required certification, recertification, or QA test, the applicable acceptance criterion (either in PS–11 in appendix B to part 60 of this chapter or Procedure 2 in appendix F to part 60 of this chapter) is not met. Further, data from your PM CEMS are considered out-of-control, and may not be used for reporting, when a required QA test is not performed on schedule or within an allotted grace period. When an out-of-control period occurs, you must perform the appropriate follow-up actions. For an out-of-control period triggered by a failed QA test, you must perform and pass the same type of test in order to end the out-of-control period. For a QA test that is not performed on time, data from the PM CEMS remain out-of-control until the required test has been performed and passed. You must count all out-of-control data periods of the PM CEMS as hours of monitoring system downtime.

5.2 *Stack Gas Flow Rate, Diluent Gas, and Moisture Monitoring Systems.* The on-going QA test requirements and data validation criteria for the primary and (if applicable) redundant backup stack gas flow rate, diluent gas, and moisture monitoring systems are specified in appendix B to part 75 of this chapter.

5.3 *QA/QC Program Requirements.* You must develop and implement a QA/QC program for the PM CEMS and the other equipment that is used to provide data under this subpart. You may store your QA/QC plan electronically, provided that the information can be made available expeditiously in hard copy to auditors and inspectors.

5.3.1 General Requirements.

5.3.1.1 Preventive Maintenance. You must keep a written record of the procedures needed to maintain the PM CEMS and other equipment that is used to provide data under this subpart in proper operating condition, along with a schedule for those procedures. At a minimum, you must include all procedures specified by the manufacturers of the equipment and, if applicable, additional or alternate procedures developed for the equipment.

5.3.1.2 Recordkeeping Requirements. You must keep a written record describing procedures that will be used to implement the recordkeeping and reporting requirements of this appendix.

5.3.1.3 Maintenance Records. You must keep a record of all testing, maintenance, or repair activities performed on the PM CEMS, and other equipment used to provide data under this subpart in a location and format suitable for inspection. You may use a maintenance log for this purpose. You must maintain the following records for each system or device: The date, time, and description of any testing, adjustment, repair, replacement, or preventive maintenance action performed, and records of any corrective actions taken. Additionally, you must record any adjustment that may affect the ability of a monitoring system or measurement device to make accurate measurements, and you must keep a written explanation of the procedures used to make the adjustment(s).

5.3.2 Specific Requirements for the PM CEMS.

5.3.2.1 Daily, and Quarterly Quality Assurance Assessments. You must keep a written record of the procedures used for daily assessments of the PM CEMS. You must also keep records of the procedures used to perform quarterly ACA and (if applicable) SVA audits. You must document how the test results are calculated and evaluated.

5.3.2.2 Monitoring System Adjustments. You must document how each component of the PM CEMS will be adjusted to provide correct responses after routine maintenance, repairs, or corrective actions.

5.3.2.3 Correlation Tests, Annual and Triennial Audits. You must keep a written record of procedures used for the correlation test(s), annual RRAs, and triennial RCAs of the PM CEMS. You must document how the test results are calculated and evaluated.

5.3.3 Specific Requirements for Diluent Gas, Stack Gas Flow Rate, and Moisture Monitoring Systems. The QA/QC program requirements for the stack gas flow rate, diluent gas, and moisture monitoring systems described in section 3.2.3 of this appendix are specified in section 1 of appendix B to part 75 of this chapter.

5.3.4 Requirements for Other Monitoring Equipment. For the equipment required to convert readings from the PM CEMS to standard conditions (*e.g.*, devices to measure temperature and pressure), you must keep a written record of the calibrations and/or other procedures used to ensure that the devices provide accurate data.

5.3.5 You may store your QA/QC plan electronically, provided that you can make the information available expeditiously in hard copy to auditors or inspectors.

## 6. Data Reduction and Caculations

6.1 *Data Reduction and Validation.*

6.1.1 You must reduce the data from PM CEMS to hourly averages, in accordance with 40 CFR 60.13(h)(2) of this chapter.

6.1.2 You must reduce all CEMS data from stack gas flow rate, $CO_2$, $O_2$, and moisture monitoring systems to hourly averages according to 40 CFR 75.10(d)(1) of this chapter.

6.1.3 You must reduce all other data from devices used to convert readings from the PM CEMS to standard conditions to hourly averages according to 40 CFR 60.13(h)(2) or 40 CFR 75.10(d)(1) of this chapter. This includes, but is not limited to, data from devices used to measure temperature and pressure, or, for cogeneration units that calculate gross output based on steam characteristics, devices to measure steam flow rate, steam pressure, and steam temperature.

6.1.4 Do not calculate the PM emission rate for any unit or stack operating hour in which valid data are not obtained for PM concentration or for any parameter used in the PM emission rate calculations (*i.e.*, gross output, stack gas flow rate, stack temperature, stack pressure, stack gas moisture content, or diluent gas concentration, as applicable).

6.1.5 For the purposes of this appendix, part 75 substitute data values for stack gas flow rate, $CO_2$ concentration, $O_2$ concentration, and moisture content are not considered to be valid data.

6.1.6 Operating hours in which PM concentration is missing or invalid are hours of monitoring system downtime. The use of substitute data for PM concentration is not allowed.

6.1.7 You must exclude all data obtained during a boiler startup or shutdown operating hour (as defined in 40 CFR 63.10042) from the determination of the 30-boiler operating day rolling average PM emission rates.

6.2 *Calculation of PM Emission Rates.* Unless your PM CEMS is correlated to provide PM concentrations at standard conditions, you must use the calculation methods in sections 6.2.1 through 6.2.3 of this appendix to convert measured PM concentration values to units of the emission limit (lb/MMBtu or lb/MWh, as applicable).

6.2.1 PM concentrations must be at standard conditions in order to convert them to units of the emissions limit. If your PM CEMS measures PM concentrations at standard conditions, proceed to section 6.2.2 or 6.2.3, below (as applicable). However, if your PM CEMS measures PM concentrations in units of mg/acm or mg/acm at a specified temperature (*e.g.*, 160 °C), you must first use one of the following equations to convert the hourly PM concentration values from actual to standard conditions:

$$C_{std} = C_a \left( \frac{460 + T_s}{P_s} \right) \left( \frac{P_{std}}{460 + T_{std}} \right) \quad \text{(Eq. C-1)}$$

or

$$C_{std} = C_a \left( \frac{460 + T_{CEMS}}{P_{CEMS}} \right) \left( \frac{P_{std}}{460 + T_{std}} \right) \quad \text{(Eq. C-2)}$$

Where:

$C_{std}$ = PM concentration at standard conditions

$C_a$ = PM concentration at measurement conditions

$T_s$ = Stack Temperature ( °F)

$T_{CEMS}$ = CEMS Measurement Temperature ( °F)

$P_{CEMS}$ = CEMS Measurement Pressure (in. Hg)

$P_s$ = Stack Pressure (in. Hg)

$T_{std}$ = Standard Temperature (68 °F)

$P_{std}$ = Standard Pressure (29.92 in. Hg).

6.2.2 Heat Input-Based PM Emission Rates (Existing EGUs, Only). Calculate the hourly heat input-based PM emission rates (if applicable), in units of lb/MMBtu, according to sections 6.2.2.1 and 6.2.2.2 of this appendix.

6.2.2.1 You must select an appropriate emission rate equation from among Equations 19–1 through 19–9 in appendix A–7 to part 60 of this chapter to convert the hourly PM concentration values from section 6.2.1 of this appendix to units of lb/MMBtu. Note that the EPA test Method 19 equations require the pollutant concentration to be expressed in units of lb/scf; therefore, you must first multiply the PM concentration by $6.24 \times 10^{-8}$ to convert it from mg/scm to lb/scf.

6.2.2.2 You must use the appropriate carbon-based or dry-basis F-factor in the emission rate equation that you have selected. You may either use an F-factor from Table 19–2 of EPA test Method 19 in appendix A–7 to part 60 of this chapter or from section 3.3.5 or section 3.3.6 of appendix F to part 75 of this chapter.

6.2.2.3 If the hourly average $O_2$ concentration is above 14.0% $O_2$ (19.0% for an IGCC) or the hourly average $CO_2$ concentration is below 5.0% $CO_2$ (1.0% for an IGCC), you may calculate the PM emission rate using the applicable diluent cap value (as defined in 40 CFR 63.10042 and specified in 40 CFR 63.10007(f)(1)), provided that the diluent gas monitor is operating and recording quality-assured data).

6.2.2.4 If your selected EPA test Method 19 equation requires a correction for the stack gas moisture content, you may either use quality-assured hourly data from a certified part 75 moisture monitoring system, a fuel-specific default moisture value from 40 CFR 75.11(b) of this chapter, or a site-specific default moisture value approved by the Administrator under section 75.66 of this chapter.

6.2.3 Gross Output-Based PM Emission Rates. For each unit or stack operating hour, if $C_{std}$ is measured on a wet basis, you must use Equation C–3 to calculate the gross output-based PM emission rate (if applicable). Use Equation C–4 if $C_{std}$ is measured on a dry basis:

$$E_{heo} = 6.24 \ x \ 10^{-8} \left( \frac{C_{std} \ Q_s}{MW} \right) \quad \text{(Eq. C-3)}$$

Where:

$E_{heo}$ = Hourly gross output-based PM emission rate (lb/MWh)

$C_{std}$ = PM concentration from section 6.2.1 (mg/scm), wet basis

$Q_s$ = Unadjusted stack gas volumetric flow rate (scfh, wet basis)

MW = Gross output (megawatts)

$6.24 \times 10^{-8}$ = Conversion factor

or

$$E_{heo} = 6.24\ x\ 10^{-8}\ \left(\frac{C_{std}\ Q_s}{MW}\right)\left(1 - B_{ws}\right) \qquad \text{(Eq. C-4)}$$

Where:

$E_{heo}$ = Hourly gross output-based PM emission rate (lb/MWh)

$C_{std}$ = PM concentration from section 6.2.1 (mg/scm), dry basis

$Q_s$ = Unadjusted stack gas volumetric flow rate (scfh, wet basis)

MW = Gross output (megawatts)

$B_{ws}$ = Proportion by volume of water vapor in the stack gas

$6.24 \times 10^{-8}$ = Conversion factor

6.2.4 You must calculate the 30–boiler operating day rolling average PM emission rates according to 40 CFR 63.10021(b).

7. Recordkeeping and Reporting

7.1 *Recordkeeping Provisions*. For the PM CEMS and the other necessary CMS and parameter measurement devices installed at each affected unit or common stack, you must maintain a file of all measurements, data, reports, and other information required by this appendix in a form suitable for inspection, for 5 years from the date of each record, in accordance with 40 CFR 63.10033. The file shall contain the applicable information in sections 7.1.1 through 7.1.11 of this appendix.

7.1.1 Monitoring Plan Records. For each EGU or group of EGUs monitored at a common stack, you must prepare and maintain a monitoring plan for the PM CEMS and the other CMS(s) needed to convert PM concentrations to units of the applicable emission standard.

7.1.1.1 Updates. If you make a replacement, modification, or change in a certified CEMS that is used to provide data under this appendix (including a change in the automated data acquisition and handling system (DAHS)) or if you make a change to the flue gas handling system and that replacement, modification, or change affects information reported in the monitoring plan (*e.g.*, a change to a serial number for a component of a monitoring system), you shall update the monitoring plan.

7.1.1.2 Contents of the Monitoring Plan. For the PM CEMS, your monitoring plan shall contain the applicable information in sections 7.1.1.2.1 and 7.1.1.2.2 of this appendix. For required stack gas flow rate, diluent gas, and moisture monitoring systems, your monitoring plan shall include the applicable information required for those systems under 40 CFR 75.53 (g) and (h) of this chapter.

7.1.1.2.1 Electronic. Your electronic monitoring plan records must include the following information: Unit or stack ID number(s); unit information (type of unit, maximum rated heat input, fuel type(s), emission controls); monitoring location(s); the monitoring methodologies used; monitoring system information, including (as applicable): Unique system and component ID numbers; the make, model, and serial number of the monitoring equipment; the sample acquisition method; formulas used to calculate emissions; operating range and load information; monitor span and range information; units of measure of your PM concentrations (see section 3.2.2); and appropriate default values. Your electronic monitoring plan shall be evaluated and submitted using the ECMPS Client Tool provided by the Clean Air Markets Division (CAMD) in EPA's Office of Atmospheric Programs.

7.1.1.2.2 Hard Copy. You must keep records of the following items: Schematics and/or blueprints showing the location of the PM monitoring system(s) and test ports; data flow diagrams; test protocols; and miscellaneous technical justifications. The hard copy portion of the monitoring plan must also explain how the PM concentrations are measured and how they are converted to the units of the applicable emissions limit. The equation(s) used for the conversions must be documented. Electronic storage of the hard copy portion of the monitoring plan is permitted.

7.1.2 Operating Parameter Records. You must record the following information for each operating hour of each EGU and also for each group of EGUs utilizing a monitored common stack, to the extent that these data are needed to convert PM concentration data to the units of the emission standard. For non-operating hours, you must record only the items in sections 7.1.2.1 and 7.1.2.2 of this appendix. If you elect to or are required to comply with a gross output-based PM standard, for any hour in which there is gross output greater than zero, you must record the items in sections 7.1.2.1 through 7.1.2.3 and (if applicable) 7.1.2.5 of this appendix; however, if there is heat input to the unit(s) but no gross output (*e.g.*, at unit startup), you must record the items in sections 7.1.2.1, 7.1.2.2, and, if applicable, section 7.1.2.5 of this appendix. If you elect to comply with a heat input-based PM standard, you must record only the items in sections 7.1.2.1, 7.1.2.2, 7.1.2.4, and, if applicable, section 7.1.2.5 of this appendix.

7.1.2.1 The date and hour;

7.1.2.2 The unit or stack operating time (rounded up to the nearest fraction of an hour (in equal increments that can range

from 1 hundredth to 1 quarter of an hour, at your option);

7.1.2.3 The hourly gross output (rounded to nearest MWe);

7.1.2.4 If applicable, the $F_c$ factor or dry-basis F-factor used to calculate the heat input-based PM emission rate; and

7.1.2.5 If applicable, a flag to indicate that the hour is an exempt startup or shutdown hour.

7.1.3 PM Concentration Records. For each affected unit or common stack using a PM CEMS, you must record the following information for each unit or stack operating hour:

7.1.3.1 The date and hour;

7.1.3.2 Monitoring system and component identification codes for the PM CEMS, as provided in the electronic monitoring plan, if your CEMS provides a quality-assured value of PM concentration for the hour;

7.1.3.3 The hourly PM concentration, in units of measure that correspond to your PM CEMS correlation curve, for each operating hour in which a quality-assured value is obtained. Record all PM concentrations with one leading non-zero digit and one decimal place, expressed in scientific notation. Use the following rounding convention: If the digit immediately following the first decimal place is 5 or greater, round the first decimal place upward (increase it by one); if the digit immediately following the first decimal place is 4 or less, leave the first decimal place unchanged.

7.1.3.4 A special code, indicating whether or not a quality-assured PM concentration is obtained for the hour; and

7.1.3.5 Monitor data availability for PM concentration, as a percentage of unit or stack operating hours calculated in the manner established for $SO_2$, $CO_2$, $O_2$ or moisture monitoring systems according to 40 CFR 75.32 of this chapter.

7.1.4 Stack Gas Volumetric Flow Rate Records.

7.1.4.1 When a gross output-based PM emissions limit must be met, in units of lb/MWh, you must obtain hourly measurements of stack gas volumetric flow rate during EGU operation, in order to convert PM concentrations to units of the standard.

7.1.4.2 When hourly measurements of stack gas flow rate are needed, you must keep hourly records of the flow rates and related information, as specified in 40 CFR 75.57(c)(2) of this chapter.

7.1.5 Records of Diluent Gas ($CO_2$ or $O_2$) Concentration.

7.1.5.1 When a heat input-based PM emission limit must be met, in units of lb/MMBtu, you must obtain hourly measurements of $CO_2$ or $O_2$ concentration during EGU operation, in order to convert PM concentrations to units of the standard.

7.1.5.2 When hourly measurements of diluent gas concentration are needed, you must keep hourly $CO_2$ or $O_2$ concentration records, as specified in 40 CFR 75.57(g) of this chapter.

7.1.6 Records of Stack Gas Moisture Content.

7.1.6.1 When corrections for stack gas moisture content are needed to demonstrate compliance with the applicable PM emissions limit:

7.1.6.1.1 If you use a continuous moisture monitoring system, you must keep hourly records of the stack gas moisture content and related information, as specified in 40 CFR 75.57(c)(3) of this chapter.

7.1.6.1.2 If you use a fuel-specific default moisture value, you must represent it in the electronic monitoring plan required under section 7.1.1.2.1 of this appendix.

7.1.7 PM Emission Rate Records. For applicable PM emission limits in units of lb/MMBtu or lb/MWh, you must record the following information for each affected EGU or common stack:

7.1.7.1 The date and hour;

7.1.7.2 The hourly PM emissions rate (lb/MMBtu or lb/MWh, as applicable), calculated according to section 6.2.2 or 6.2.3 of this appendix, rounded to the same precision as the standard (*i.e.*, with one leading non-zero digit and one decimal place, expressed in scientific notation), expressed in scientific notation. Use the following rounding convention: If the digit immediately following the first decimal place is 5 or greater, round the first decimal place upward (increase it by one); if the digit immediately following the first decimal place is 4 or less, leave the first decimal place unchanged. You must calculate the PM emission rate only when valid values of PM concentration and all other required parameters required to convert PM concentration to the units of the standard are obtained for the hour;

7.1.7.3 An identification code for the formula used to derive the hourly PM emission rate from measurements of the PM concentration and other necessary parameters (*i.e.*, Equation C–3 or C–4 in section 6.2.3 of this appendix or the applicable EPA test Method 19 equation);

7.1.7.4 If applicable, indicate that the diluent cap has been used to calculate the PM emission rate; and

7.1.7.5 If applicable, indicate that the default electrical load (as defined in 40 CFR 63.10042) has been used to calculate the hourly PM emission rate.

7.1.7.6 Indicate that the PM emission rate was not calculated for the hour, if valid data are not obtained for PM concentration and/or any of the other parameters in the PM emission rate equation. For the purposes of this appendix, substitute data values for stack gas flow rate, $CO_2$ concentration, $O_2$ concentration, and moisture content reported under part 75 of this chapter are not considered to be valid data. However, when the gross output (as defined in 40 CFR

63.10042) is reported for an operating hour with zero output, the default electrical load value is treated as quality-assured data.

7.1.8 Other Parametric Data. If your PM CEMS measures PM concentrations at actual conditions, you must keep records of the temperatures and pressures used in Equation C–1 or C–2 to convert the measured hourly PM concentrations to standard conditions.

7.1.9 Certification, Recertification, and Quality Assurance Test Records. For any PM CEMS used to provide data under this subpart, you must record the following certification, recertification, and quality assurance information:

7.1.9.1 The test dates and times, reference values, monitor responses, monitor full scale value, and calculated results for the required 7-day drift tests and for the required daily zero and upscale calibration drift tests;

7.1.9.2 The test dates and times and results (pass or fail) of all daily system optics checks and daily sample volume checks of the PM CEMS (as applicable);

7.1.9.3 The test dates and times, reference values, monitor responses, and calculated results for all required quarterly ACAs;

7.1.9.4 The test dates and times, reference values, monitor responses, and calculated results for all required quarterly SVAs of extractive PM CEMS;

7.1.9.5 The test dates and times, reference method readings and corresponding PM CEMS responses (including the units of measure), and the calculated results for all PM CEMS correlation tests, RRAs and RCAs. For the correlation tests, you must indicate which model is used (*i.e.*, linear, logarithmic, exponential, polynomial, or power) and record the correlation equation. For the RRAs and RCAs, the reference method readings and PM CEMS responses must be reported in the same units of measure as the PM CEMS correlation;

7.1.9.6 The cycle time and sample delay time for PM CEMS that operate in batch sampling mode; and

7.1.9.7 Supporting information for all required PM CEMS correlation tests, RRAs, and RCAs, including records of all raw reference method and monitoring system data, the results of sample analyses to substantiate the reported test results, as well as records of sampling equipment calibrations, reference monitor calibrations, and analytical equipment calibrations.

7.1.10 For stack gas flow rate, diluent gas, and moisture monitoring systems, you must keep records of all certification, recertification, diagnostic, and on-going quality-assurance tests of these systems, as specified in 40 CFR 75.59(a) of this chapter.

7.1.11 For each temperature measurement device (*e.g.*, resistance temperature detector or thermocouple) and pressure measurement device used to convert measured PM concentrations to standard conditions according to Equation C–1 or C–2, you must keep records of all calibrations and other checks performed to ensure that accurate data are obtained.

7.2 *Reporting Requirements.*

7.2.1 General Reporting Provisions. You must comply with the following requirements for reporting PM emissions from each affected EGU (or group of EGUs monitored at a common stack) under this subpart:

7.2.1.1 Notifications, in accordance with section 7.2.2 of this appendix;

7.2.1.2 Monitoring plan reporting, in accordance with section 7.2.3 of this appendix;

7.2.1.3 Certification, recertification, and quality assurance test submittals, in accordance with section 7.2.4 of this appendix; and

7.2.1.4 Electronic quarterly emissions report submittals, in accordance with section 7.2.5 of this appendix.

7.2.2 Notifications. You must provide notifications for each affected unit (or group of units monitored at a common stack) under this subpart in accordance with 40 CFR 63.10030.

7.2.3 Monitoring Plan Reporting. For each affected unit (or group of units monitored at a common stack) under this subpart using PM CEMS to measure PM emissions, you must make electronic and hard copy monitoring plan submittals as follows:

7.2.3.1 For an EGU that begins reporting hourly PM concentrations on January 1, 2024, with a previously certified PM CEMS, submit the monitoring plan information in section 7.1.1.2 of this appendix prior to or concurrent with the first required quarterly emissions report. For a new EGU, or for an EGU switching to continuous monitoring of PM emissions after having implemented another allowable compliance option under this subpart, submit the information in section 7.1.1.2 of this appendix at least 21 days prior to the start of initial certification testing of the PM CEMS. Also submit the monitoring plan information in 40 CFR 75.53(g) pertaining to any required flow rate, diluent gas, and moisture monitoring systems within the applicable time frame specified in this section, if the required records are not already in place.

7.2.3.2 Whenever an update of the monitoring plan is required, as provided in section 7.1.1.1 of this appendix, you must submit the updated information either prior to or concurrent with the relevant quarterly electronic emissions report.

7.2.3.3 All electronic monitoring plan submittals and updates shall be made to the Administrator using the ECMPS Client Tool. Hard copy portions of the monitoring plan shall be submitted to the appropriate delegated authority.

7.2.4 Certification, Recertification, and Quality-Assurance Test Reporting. Except for daily quality assurance tests of the required monitoring systems (*i.e.*, calibration

error or drift tests, sample volume checks, system optics checks, and flow monitor interference checks), you must submit the results of all required certification, recertification, and quality-assurance tests described in sections 7.1.9.1 through 7.1.9.6 and 7.1.10 of this appendix electronically (except for test results previously submitted, *e.g.*, under the Acid Rain Program), using the ECMPS Client Tool. Submit the results of the quality assurance test (*i.e.*, RCA or RRA) or, if applicable, a new PM CEMS correlation test, either prior to or concurrent with the relevant quarterly electronic emissions report. If this is not possible, you have up to 60 days after the test completion date to submit the test results; in this case, you may claim provisional status for the emissions data affected by the quality assurance test or correlation, starting from the date and hour in which the test was completed and continuing until the date and hour in which the test results are submitted. For an RRA or RCA, if the applicable audit specifications are met, the status of the emissions data in the relevant time period changes from provisional to quality-assured, and no further action is required. For a successful correlation test, apply the correlation equation retrospectively to the raw data to change the provisional status of the data to quality-assured, and resubmit the affected emissions report(s). However, if the applicable performance specifications are not met, the provisional data must be invalidated, and resubmission of the affected quarterly emission report(s) is required. For a failed RRA or RCA, you must take corrective actions and proceed according to the applicable requirements found in sections 10.5 through 10.7 of Procedure 2 until a successful quality assurance test report is submitted. If a correlation test is unsuccessful, you may not report quality-assured data from the PM CEMS until the results of a subsequent correlation test show that the specifications in section 13.0 of PS 11 are met.

7.2.5 Quarterly Reports.

7.2.5.1 For each affected EGU (or group of EGUs monitored at a common stack), the owner or operator must use the ECMPS Client Tool to submit electronic quarterly emissions reports to the Administrator, in an XML format specified by the Administrator, starting with a report for the later of:

7.2.5.1.1 The first calendar quarter of 2024; or

7.2.5.1.2 The calendar quarter in which the initial PM CEMS correlation test is completed.

7.2.5.2 You must submit the electronic reports within 30 days following the end of each calendar quarter, except for EGUs that have been placed in long-term cold storage (as defined in section 72.2 of this chapter).

7.2.5.3 Each of your electronic quarterly reports shall include the following information:

7.2.5.3.1 The date of report generation;

7.2.5.3.2 Facility identification information;

7.2.5.3.3 The information in sections 7.1.2 through 7.1.7 of this appendix that is applicable to your PM emission measurement methodology; and

7.2.5.3.4 The results of all daily quality assurance assessments, *i.e.*, calibration drift checks and (if applicable) sample volume checks of the PM CEMS, calibration error tests of the other continuous monitoring systems that are used to convert PM concentration to units of the standard, and (if applicable) flow monitor interference checks.

7.2.5.4 Compliance Certification. Based on a reasonable inquiry of those persons with primary responsibility for ensuring that all PM emissions from the affected unit(s) under this subpart have been correctly and fully monitored, the owner or operator must submit a compliance certification in support of each electronic quarterly emissions monitoring report. The compliance certification shall include a statement by a responsible official with that official's name, title, and signature, certifying that, to the best of his or her knowledge, the report is true, accurate, and complete.

[85 FR 55769, Sept. 9, 2020]

## APPENDIX D TO SUBPART UUUUU OF PART 63—PM CPMS MONITORING PROVISIONS

### 1. General Provisions

1.1 *Applicability*. These monitoring provisions apply to the continuous monitoring of the output from a PM CPMS, for the purpose of assessing continuous compliance with an applicable emissions limit in Table 1 or Table 2 to this subpart.

1.2 *Summary of the Method*. The output from an instrument capable of continuously measuring PM concentration is continuously recorded, either in milliamps, PM concentration, or other units of measure. An operating limit for the PM CPMS is established initially, based on data recorded by the monitoring system during a performance stack test. The performance test is repeated annually, and the operating limit is reassessed. In-between successive performance tests, the output from the PM CPMS serves as an indicator of continuous compliance with the applicable emissions limit.

### 2. Continuous Monitoring of the PM CPMS Output

2.1 *System Design and Performance Criteria*. The PM CPMS must meet the design and performance criteria specified in 40 CFR 63.10010(h)(1)(i) through (iii) and 40 CFR 63.10023(b)(2)(iii) and (iv). In addition, an automated DAHS is required to record the output from the PM CPMS and to generate

the quarterly electronic data reports required under section 3.2.4 of this appendix.

2.2 *Installation Requirements.* Install the PM CPMS at an appropriate location in the stack or duct, in accordance with 40 CFR 63.10010(a).

2.3 *Determination of Operating Limits.*

2.3.1 In accordance with 40 CFR 63.10007(a)(3), 40 CFR 63.10011(b), 40 CFR 63.10023(a), and Table 6 to this subpart, you must determine an initial site-specific operating limit for your PM CPMS, using data recorded by the monitoring system during a performance stack test that demonstrates compliance with one of the following emissions limits in Table 1 or Table 2 to this subpart: Filterable PM; total non-Hg HAP metals; total HAP metals including Hg (liquid oil-fired units, only); individual non-Hg HAP metals; or individual HAP metals including Hg (liquid oil-fired units, only).

2.3.2 In accordance with 40 CFR 63.10005(d)(2)(i), you must perform the initial stack test no later than the applicable date in 40 CFR 63.9984(f), and according to 40 CFR 63.10005(d)(2)(iii) and 63.10006(a), the performance test must be repeated annually to document compliance with the emissions limit and to reassess the operating limit.

2.3.3 Calculate the operating limits according to 40 CFR 63.10023(b)(1) for existing units, and 40 CFR 63.10023(b)(2) for new units.

2.4 *Data Reduction and Compliance Assessment.*

2.4.1 Reduce the output from the PM CPMS to hourly averages, in accordance with 40 CFR 63.8(g)(2) and (5).

2.4.2 To determine continuous compliance with the operating limit, you must calculate 30-boiler operating day rolling average values of the output from the PM CPMS, in accordance with 40 CFR 63.10010(h)(3) through (6), 40 CFR 63.10021(c), and Table 7 to this subpart.

2.4.3 In accordance with 40 CFR 63.10005(d)(2)(ii), 40 CFR 63.10022(a)(2), and Table 4 to this subpart, the 30-boiler operating day rolling average PM CPMS output must be maintained at or below the operating limit. However, if exceedances of the operating limit should occur, you must follow the applicable procedures in 40 CFR 63.10021(c)(1) and (2).

3. RECORDKEEPING AND REPORTING.

3.1 *Recordkeeping Provisions.* You must keep the applicable records required under 40 CFR 63.10032(b) and (c) for your PM CPMS. In addition, you must maintain a file of all measurements, data, reports, and other information required by this appendix in a form suitable for inspection, for 5 years from the date of each record, in accordance with 40 CFR 63.10033.

3.1.1 Monitoring Plan Records.

3.1.1.1 You must develop and maintain a site-specific monitoring plan for your PM CPMS, in accordance with 63.10000(d).

3.1.1.2 In addition to the site-specific monitoring plan required under 40 CFR 63.10000(d), you must use the ECMPS Client Tool to prepare and maintain an electronic monitoring plan for your PM CPMS.

3.1.1.2.1 Contents of the Electronic Monitoring Plan. The electronic monitoring plan records must include the unit or stack ID number(s), monitoring location(s), the monitoring methodology used (*i.e.*, PM CPMS), the current operating limit of the PM CPMS (including the units of measure), unique system and component ID numbers, the make, model, and serial number of the PM CPMS, the analytical principle of the monitoring system, and monitor span and range information.

3.1.1.2.2 Electronic Monitoring Plan Updates. If you replace or make a change to a PM CPMS that is used to provide data under this subpart (including a change in the automated DAHS) and the replacement or change affects information reported in the electronic monitoring plan (*e.g.*, changes to the make, model and serial number when a PM CPMS is replaced), you must update the monitoring plan.

3.1.2 Operating Parameter Records. You must record the following information for each operating hour of each affected unit and for each group of units utilizing a common stack. For non-operating hours, record only the items in sections 3.1.2.1 and 3.1.2.2 of this appendix.

3.1.2.1 The date and hour;

3.1.2.2 The unit or stack operating time (rounded up to the nearest fraction of an hour (in equal increments that can range from 1 hundredth to 1 quarter of an hour, at the option of the owner or operator); and

3.1.2.3 If applicable, a flag to indicate that the hour is an exempt startup or shutdown hour.

3.1.3 PM CPMS Output Records. For each affected unit or common stack using a PM CPMS, you must record the following information for each unit or stack operating hour:

3.1.3.1 The date and hour;

3.1.3.2 Monitoring system and component identification codes for the PM CPMS, as provided in the electronic monitoring plan, for each operating hour in which the monitoring system is not out-of-control and a valid value of the output parameter is obtained;

3.1.3.3 The hourly average output from the PM CPMS, for each operating hour in which the monitoring system is not out-of-control and a valid value of the output parameter is obtained, either in milliamps, PM concentration, or other units of measure, as applicable;

3.1.3.4 A special code for each operating hour in which the PM CPMS is out-of-control and a valid value of the output parameter is not obtained; and

3.1.3.5 Percent monitor data availability for the PM CPMS, calculated in the manner established for $SO_2$, $CO_2$, $O_2$ or moisture monitoring systems according to section 75.32 of this chapter.

3.1.4 Records of PM CPMS Audits and Out-of-Control Periods. In accordance with 40 CFR 63.10010(h)(7), you must record, and make available upon request, the results of PM CPMS performance audits, as well as the dates of PM CPMS out-of-control periods and the corrective actions taken to return the system to normal operation.

3.2 *Reporting Requirements.*

3.2.1 General Reporting Provisions. You must comply with the following requirements for reporting PM CPMS data from each affected EGU (or group of EGUs monitored at a common stack) under this subpart:

3.2.1.1 Notifications, in accordance with section 3.2.2 of this appendix;

3.2.1.2 Monitoring plan reporting, in accordance with section 3.2.3 of this appendix;

3.2.1.3 Report submittals, in accordance with sections 3.2.4 and 3.2.5 of this appendix.

3.2.2 Notifications. You must provide notifications for the affected unit (or group of units monitored at a common stack) in accordance with 40 CFR 63.10030.

3.2.3 Monitoring Plan Reporting. For each affected unit (or group of units monitored at a common stack) under this subpart using a PM CPMS you must make monitoring plan submittals as follows:

3.2.3.1 For units using the PM CPMS compliance option prior to January 1, 2024, submit the electronic monitoring plan information in section 3.1.1.2.1 of this appendix prior to or concurrent with the first required electronic quarterly report. For units switching to the PM CPMS methodology on or after January 1, 2024, submit the electronic monitoring plan no later than 21 days prior to the date on which the PM test is performed to establish the initial operating limit.

3.2.3.2 Whenever an update of the electronic monitoring plan is required, as provided in section 3.1.1.2.2 of this appendix, the updated information must be submitted either prior to or concurrent with the relevant quarterly electronic emissions report.

3.2.3.3 All electronic monitoring plan submittals and updates shall be made to the Administrator using the ECMPS Client Tool.

3.2.3.4 In accordance with 40 CFR 63.10000(d), you must submit the site-specific monitoring plan described in section 3.1.1.1 of this appendix to the Administrator, if requested.

3.2.4 Electronic Quarterly Reports.

3.2.4.1 For each affected EGU (or group of EGUs monitored at a common stack) that is subject to the provisions of this appendix, reporting of hourly responses from the PM CPMS will begin either with the first operating hour in the third quarter of 2023 or the first operating hour after completion of the initial stack test that establishes the operating limit, whichever is later. The owner or operator must then use the ECMPS Client Tool to submit electronic quarterly reports to the Administrator, in an XML format specified by the Administrator, starting with a report for the later of:

3.2.4.1.1 The first calendar quarter of 2024; or

3.2.4.1.2 The calendar quarter in which the initial operating limit for the PM CPMS is established.

3.2.4.2 The electronic quarterly reports must be submitted within 30 days following the end of each calendar quarter, except for units that have been placed in long-term cold storage (as defined in section 72.2 of this chapter).

3.2.4.3 Each electronic quarterly report shall include the following information:

3.2.4.3.1 The date of report generation;

3.2.4.3.2 Facility identification information; and

3.2.4.3.3 The information in sections 3.1.2 and 3.1.3 of this appendix.

3.2.4.4 Compliance Certification. Based on a reasonable inquiry of those persons with primary responsibility for ensuring that the output from the PM CPMS has been correctly and fully monitored, the owner or operator shall submit a compliance certification in support of each electronic quarterly report. The compliance certification shall include a statement by a responsible official with that official's name, title, and signature, certifying that, to the best of his or her knowledge, the report is true, accurate, and complete.

3.2.5 Performance Stack Test Results. You must use the ECMPS Client Tool to report the results of all performance stack tests conducted to document compliance with the applicable emissions limit in Table 1 or Table 2 to this subpart, as follows:

3.2.5.1 Report a summary of each test electronically, in XML format, in the relevant quarterly compliance report under 40 CFR 63.10031(g); and

3.2.5.2 Provide a complete stack test report as a PDF file, in accordance with 40 CFR 63.10031(f) or (h), as applicable.

[85 FR 55774, Sept. 9, 2020]

## APPENDIX E TO SUBPART UUUUU OF PART 63—DATA ELEMENTS

1.0 You must record the electronic data elements in this appendix that apply to your compliance strategy under this subpart. The applicable data elements in sections 2 through 13 of this appendix must be reported

in the quarterly compliance reports required under 40 CFR 63.10031(g), in an XML format prescribed by the Administrator, starting with a report that covers the first quarter of 2024. For stack tests used to demonstrate compliance, RATAs, PM CEMS correlations, RRAs and RCAs that are completed on and after January 1, 2024, the applicable data elements in sections 17 through 30 of this appendix must be reported in an XML format prescribed by the Administrator, and the information in section 31 of this appendix must be reported in as one or more PDF files.

2.0 *MATS Compliance Report Root Data Elements*. You must record the following data elements and include them in each quarterly compliance report:

2.1 Energy Information Administration's Office of Regulatory Information Systems (ORIS) Code;

2.2 Facility Name;

2.3 Facility Registry Identifier;

2.4 Title 40 Part;

2.5 Applicable Subpart;

2.6 Calendar Year;

2.7 Calendar Quarter; and

2.8 Submission Comment (optional)

3.0 *Performance Stack Test Summary*. If you elect to demonstrate compliance using periodic performance stack testing (including 30-boiler operating day Hg LEE tests), record the following data elements for each test:

3.1 Parameter

3.2 Test Location ID;

3.3 Test Number;

3.4 Test Begin Date, Hour, and Minute;

3.5 Test End Date, Hour, and Minute;

3.6 Timing of Test (either performed on-schedule according to 40 CFR 63.10006(f), or was late);

3.7 Averaging Plan Indicator;

3.8 Averaging Group ID (if applicable);

3.9 EPA Test Method Code;

3.10 Emission Limit, Including Units of Measure;

3.11 Average Pollutant Emission Rate;

3.12 LEE Indicator;

3.13 LEE Basis (if applicable); and

3.14 Submission Comment (optional)

4.0 *Operating limit Data (PM CPMS, only):*

4.1 Parameter Type;

4.2 Operating Limit; and

4.3 Units of Measure.

5.0 *Performance Test Run Data*. For each run of the performance stack test, record the following data elements:

5.1 Run Number

5.2 Run Begin Date, Hour, and Minute;

5.3 Run End Date, Hour, and Minute;

5.4 Pollutant Concentration and Units of Measure;

5.5 Emission Rate;

5.6 EPA Test Method 19 Equation (if applicable);

5.7 Total Sampling Time; and

5.8 Total Sample Volume.

6.0 *Conversion Parameters*. For the parameters that are used to convert the pollutant concentration to units of the emission standard (including, as applicable, $CO_2$ or $O_2$ concentration, stack gas flow rate, stack gas moisture content, F-factors, and gross output), record:

6.1 Parameter Type;

6.2 Parameter Source; and

6.3 Parameter Value, Including Units of Measure.

7.0 *Quality Assurance Parameters:* For key parameters that are used to quality-assure the reference method data (including, as applicable, filter temperature, percent isokinetic, leak check results, percent breakthrough, percent spike recovery, and relative deviation), record:

7.1 Parameter Type;

7.2 Parameter Value; and

7.3 Pass/Fail Status.

8.0 *Averaging Group Configuration*. If a particular EGU or common stack is included in an averaging plan, record the following data elements:

8.1 Parameter Being Averaged;

8.2 Averaging Group ID; and

8.3 Unit or Common Stack ID.

9.0 *Compliance Averages*. If you elect to (or are required to) demonstrate compliance using continuous monitoring system(s) on a 30-boiler operating day rolling average basis (or on a 30- or 90-group boiler operating day rolling WAER basis, if your monitored EGU or common stack is in an averaging plan), you must record the following data elements for each average emission rate (or, for units in an averaging plan, for each WAER):

9.1 Unit or Common Stack ID;

9.2 Averaging Group ID (if applicable);

9.3 Parameter Being Averaged;

9.4 Date;

9.5 Average Type;

9.6 Units of Measure; and

9.7 Average Value.

9.8 Comment Field.

10.0 *Unit Information*. You must record the following data elements for each EGU:

10.1 Unit ID;

10.2 Date of Last Tune-up; and

10.3 Emergency Bypass Information. If your coal-fired EGU, solid oil-derived fuel-fired EGU, or IGCC is equipped with a main stack and a bypass stack (or bypass duct) configuration, and has qualified to use the LEE compliance option, you must report the following emergency bypass information annually, in the compliance report for the fourth calendar quarter of the year:

10.3.1 The number of emergency bypass hours for the year, as a percentage of the EGU's annual operating hours;

10.3.2 A description of each emergency bypass event during the year, including the cause and corrective actions taken;

10.3.3 An explanation of how clean fuels were burned to the maximum extent possible during each emergency bypass event;

10.3.4 An estimate of the emissions released during each emergency bypass event. You must also show whether LEE status has been retained or lost, based on the emissions estimate and the results of the previous LEE retest; and

10.3.5 If there were no emergency bypass events during the year, a statement to that effect.

11.0 *Fuel Usage Information*. If subject to an emissions limit, record the following monthly fuel usage information:

11.1 Calendar Month;

11.2 Each Type of Fuel Used During the Calendar Month in the Quarter;

11.3 Quantity of Each Type of Fuel Combusted in Each Calendar Month in the Quarter, with Units of Measure;

11.4 New Fuel Type Indicator (if applicable); and

11.5 Date of Performance Test Using the New Fuel (if applicable.

12.0 *Malfunction Information (if applicable):* If there was a malfunction of the process equipment or control equipment during the reporting period that caused (or may have caused) an exceedance of an emissions or operating limit, record:

12.1 Event Begin Date and Hour (if known);

12.2 Event End Date and Hour;

12.3 Malfunction Description; and

12.4 Corrective Action.

13.0 *Deviations and Monitoring Downtime*. If there were any deviations or monitoring downtime during the reporting period, record:

13.1 Unit, Common Stack, or Averaging Group ID;

13.2 The nature of the deviation, as either:

13.2.1 Emission limit exceeded;

13.2.2 Operating limit exceeded;

13.2.3 Work practice standard not met;

13.2.4 Testing requirement not met;

13.2.5 Monitoring requirement not met;

13.2.6 Monitoring downtime incurred; or

13.2.7 Other requirement not met.

13.3 A description of the deviation, or monitoring downtime, as follows:

13.3.1 For a performance stack test or a 30- (or 90-) boiler operating day rolling average that exceeds an emissions or operating limit, record the parameter (*e.g.*, HCl, Hg, PM), the limit that was exceeded, and either the date of the non-complying performance test or the beginning and ending dates of the non-complying rolling average;

13.3.2 If an unmonitored bypass stack was used during the reporting period, record the total number of hours of bypass stack usage;

13.3.3 For periods where valid monitoring data are not reported during the reporting period, record the monitored parameter, the total source operating time (hours), and the total number of hours of monitoring deviation or downtime and other information, as indicated, for:

13.3.3.1 Monitoring system malfunctions/repairs (deviation and downtime);

13.3.3.2 Out-of-control periods/repairs (deviation and downtime);

13.3.3.3 Non-monitoring equipment malfunctions (downtime);

13.3.3.4 QA/QC activities (excluding zero and span checks) (downtime);

13.3.3.5 Routine maintenance (downtime);

13.3.3.6 Other known causes (downtime); and

13.3.3.7 Unknown causes (downtime).

13.3.4 If a performance stack test was due within the quarter but was not done, record the parameter (*e.g.*, HCl, PM), the test deadline, and a statement that the test was not done as required;

13.3.5 For a late performance stack test conducted during the quarter, record the parameter, the test deadline, and the number of days that elapsed between the test deadline and the test completion date.

13.4 Record any corrective actions taken in response to the deviation.

13.5 If there were no deviations and/or no monitoring downtime during the quarter, record a statement to that effect.

14.0 *Reference Method Data Elements*. For each of the following tests that is completed on and after January 1, 2024, you must record and report the applicable electronic data elements in sections 17 through 29 of this appendix, pertaining to the reference method(s) used for the test (see section 16 of this appendix).

14.1 Each quarterly, annual, or triennial stack test used to demonstrate compliance (including 30- (or 90-) boiler operating day Hg LEE tests and PM tests used to set operating limits for PM CPMS);

14.2 Each RATA of your Hg, HCl, HF, or $SO_2$ CEMS or each RATA of your Hg sorbent trap monitoring system; and

14.3 Each correlation test, RRA and each RCA of your PM CEMS.

15.0 You must report the applicable data elements for each test described in section 14 of this appendix in an XML format prescribed by the Administrator.

15.1 For each stack test completed during a particular calendar quarter and contained in the quarterly compliance report, you must submit along with the quarterly compliance report, the data elements in sections 17 and 18 of this appendix (which are common to all tests) and the applicable data elements in sections 19 through 31 of this appendix associated with the reference method(s) used.

15.2 For each RATA, PM CEMS correlation, RRA, or RCA, when you use the ECMPS Client Tool to report the test results as required under appendix A, B, or C to this subpart or, for $SO_2$ RATAs under part 75 of this

chapter, you must submit along with the test results, the data elements in sections 17 and 18 of this appendix and, for each test run, the data elements in sections 19 through 30 of this appendix that are associated with the reference method(s) used.

15.3 For each stack test, RATA, PM CEMS correlation, RRA, and RCA, you must also provide the information described in section 31 of this appendix as a PDF file, either along with the quarterly compliance report (for stack tests) or together with the test results reported under appendix A, B, or C to this subpart or part 75 of this chapter (for RATAs, RRAs, RCAs, or PM CEMS correlations).

16.0 *Applicable Reference Methods.* One or more of the following EPA reference methods is needed for the tests described in sections 14.1 through 14.3 of this appendix: Method 1, 2, 3A, 4, 5, 5D, 6C, 26, 26A, 29, and/or 30B.

16.1 Application of EPA test Methods 1 and 2. If you use periodic stack testing to comply with an *output-based* emissions limit, you must determine the stack gas flow rate during each performance test run in which EPA test Method 5, 5D, 26, 26A, 29, or 30B is used, in order to convert the measured pollutant concentration to units of the standard. For EPA test Methods 5, 5D, 26A and 29, which require isokinetic sampling, the delta-P readings made with the pitot tube and manometer at the EPA test Method 1 traverse points, taken together with measurements of stack gas temperature, pressure, diluent gas concentration (from a separate EPA test Method 3A or 3B test) and moisture, provide the necessary data for the EPA test Method 2 flow rate calculations. Note that even if you elect to comply with a *heat input-based* standard, when EPA test Method 5, 5D, 26A, or 29 is used, you must still use EPA test Method 2 to determine the average stack gas velocity ($v_s$), which is needed for the percent isokinetic calculation. The EPA test Methods 26 and 30B do not require isokinetic sampling; therefore, when either of these methods is used, if the stack gas flow rate is needed to comply with the applicable *output-based* emissions limit, you must make a separate EPA test Method 2 determination during each test run.

16.2 Application of EPA test Method 3A. If you elect to perform periodic stack testing to comply with a *heat input-based* emissions limit, a separate measurement of the diluent gas ($CO_2$ or $O_2$) concentration is required for each test run in which EPA test Method 5, 5D, 26, 26A, 29, or 30B is used, in order to convert the measured pollutant concentration to units of the standard. The EPA test Method 3A is the preferred $CO_2$ or $O_2$ test method, although EPA test Method 3B may be used instead. Diluent gas measurements are also needed for stack gas molecular weight determinations when using EPA test Method 2.

16.3 Application of EPA test Method 4. For performance stack tests, depending on which equation is used to convert pollutant concentration to units of the standard, measurement of the stack gas moisture content, using EPA test Method 4, may also be required for each test run. The EPA test Method 4 moisture data are also needed for the EPA test Method 2 calculations (to determine the molecular weight of the gas) and for the RATA of an Hg CEMS that measures on a wet basis, when EPA test Method 30B is used. Other applications that require EPA test Method 4 moisture determinations include: RATAs of an $SO_2$ monitor, when the reference method and CEMS data are measured on a different moisture basis (wet or dry); conversion of wet-basis pollutant concentrations to the units of a *heat input-based* emissions limit when certain EPA test Method 19 equations are used (*e.g.*, Eq. 19–3, 19–4, or 19–8); and stack gas molecular weight determinations. When EPA test Method 5, 5D, 26A, or 29 is used for the performance test, the EPA test Method 4 moisture determination may be made by using the water collected in the impingers together with data from the dry gas meter; alternatively, a separate EPA test Method 4 determination may be made. However, when EPA test Method 26 or 30B is used, EPA test Method 4 must be performed separately.

16.4 Applications of EPA test Methods 5 and 5D. The EPA test Method 5 (or, if applicable 5D) must be used for the following applications: To demonstrate compliance with a filterable PM emissions limit; for PM tests used to set operating limits for PM CPMS; and for the initial correlations, RRAs and RCAs of a PM CEMS.

16.5 Applications of EPA test Method 6C. If you elect to monitor $SO_2$ emissions from your coal-fired EGU as a surrogate for HCl, the $SO_2$ CEMS must be installed, certified, operated, and maintained according to 40 CFR part 75. Part 75 allows the use of EPA test Methods 6, 6A, 6B, and 6C for the required RATAs of the $SO_2$ monitor. However, in practice, only instrumental EPA test Method 6C is used.

16.6 Applications of EPA test Methods 26 and 26A. The EPA test Method 26A may be used for quarterly HCl or HF stack testing, or for the RATA of an HCl or HF CEMS. The EPA test Method 26 may be used for quarterly HCl or HF stack testing; however, for the RATAs of an HCl monitor that is following PS 18 and Procedure 6 in appendices B and F to part 60 of this chapter, EPA test Method 26 may only be used if approved upon request.

16.7 Applications of EPA test Method 29. The EPA test Method 29 may be used for periodic performance stack tests to determine compliance with individual or total HAP metals emissions limits. For coal-fired

EGUs, the total HAP emissions limits exclude Hg.

16.8 Applications of EPA test Method 30B. The EPA test Method 30B is used for 30- (or 90-) boiler operating day Hg LEE tests and RATAs of Hg CEMS and sorbent trap monitoring systems, and it may be used for quarterly Hg stack testing (oil-fired EGUs, only).

17.0 *Facility and Test Company Information.* In accordance with 40 CFR 63.7(e)(3), a test is defined as three or more runs of one or more EPA Reference Method(s) conducted to measure the amount of a specific regulated pollutant, pollutants, or surrogates being emitted from a particular EGU (or group of EGUs that share a common stack), and to satisfy requirements of this subpart. On or after January 1, 2024, you must report the data elements in sections 17 and 18, each time that you complete a required performance stack test, RATA, PM CEMS correlation, RRA, or RCA at the affected EGU(s), using EPA test Method 5, 5B, 5D, 6C, 26, 26A, 29, or 30B. You must also report the applicable data elements in sections 19 through 25 of this appendix for each test. If any separate, corresponding EPA test Method 2, 3A, or 4 test is conducted in order to convert a pollutant concentration to the units of the applicable emission standard given in Table 1 or Table 2 of this subpart or to convert pollutant concentration from wet to dry basis (or vice-versa), you must also report the applicable data elements in sections 26 through 31 of this appendix.

The applicable data elements in sections 17 through 31 of this appendix must be submitted separately, in XML format, along with the quarterly Compliance Report (for stack tests) or along with the electronic test results submitted to the ECMPS Client Tool (for CMS performance evaluations). The Electronic Reporting Tool (ERT) or an equivalent schema can be utilized to create this XML file. *Note:* Ideally, for all of the tests completed at a given facility in a particular calendar quarter, the applicable data elements in sections 17 through 31 of this appendix should be submitted together in one XML file. However, as shown in Table 8 to this subpart, the timelines for submitting stack test results and CMS performance evaluations are not identical. Therefore, for calendar quarters in which both types of tests are completed, it may not be possible to submit the applicable data elements for all of those tests in a single XML file; separate submittals may be necessary to meet the applicable reporting deadlines.

17.1 Part;
17.2 Subpart;
17.3 ORIS Code;
17.4 Facility Name;
17.5 Facility Address;
17.6 Facility City;
17.7 Facility County;
17.8 Facility State;
17.9 Facility Zip Code;
17.10 Facility Point of Contact;
17.11 Facility Contact Phone Number;
17.12 Facility Contact Email;
17.13 EPA Facility Registration System Number;
17.14 Source Classification Code;
17.15 State Facility ID;
17.16 Project Number;
17.17 Name of Test Company;
17.18 Test Company Address;
17.19 Test Company City;
17.20 Test Company State;
17.21 Test Company Zip Code;
17.22 Test Company Point of Contact;
17.23 Test Company Contact Phone Number;
17.24 Test Company Contact Email; and
17.25 Test Comment (optional, PM CPMS operating limits, if applicable).

18.0 *Source Information Data Elements.* You must report the following data elements, as applicable, for each source for which at least one test is included in the XML file:

18.1 Source ID (sampling location);
18.2 Stack (duct) Diameter (circular stack) (in.);
18.3 Equivalent Diameter (rectangular duct or stack) (in.);
18.4 Area of Stack;
18.5 Control Device Code; and
18.6 Control Device Description.

19.0 *Run-Level and Lab Data Elements for EPA test Methods 5, 5B, 5D, 26A, and 29.* You must report the appropriate Source ID (*i.e.*, Data Element 18.1) and the following data elements, as applicable, for each run of each performance stack test, PM CEMS correlation test, RATA, RRA, or RCA conducted using isokinetic EPA test Method 5, 5B, 5D, or 26A. If your EGU is oil-fired and you use EPA test Method 26A to conduct stack tests for both HCl and HF, you must report these data elements separately for each pollutant. When you use EPA test Method 29 to measure the individual HAP metals, total filterable HAP metals and total HAP metals, report only the run-level data elements (19.1, 19.3 through 19.30, and 19.38 through 19.41), and the point-level and lab data elements in sections 20 and 21 of this appendix:

19.1 Test Number;
19.2 Pollutant Name;
19.3 EPA Test Method;
19.4 Run Number;
19.5 Corresponding Reference Method(s), if applicable;
19.6 Corresponding Reference Method(s) Run Number, if applicable;
19.7 Number of Traverse Points;
19.8 Run Begin Date;
19.9 Run Start Time (clock time start);
19.10 Run End Date;
19.11 Run End Time (clock time end);
19.12 Barometric Pressure;
19.13 Static Pressure;
19.14 Cumulative Elapsed Sampling Time;

19.15 Percent $O_2$;
19.16 Percent $CO_2$;
19.17 Pitot Tube ID;
19.18 Pitot Tube Calibration Coefficient;
19.19 Nozzle Calibration Diameter;
19.20 F-Factor ($F_d$, $F_w$, or $F_c$);
19.21 Calibration Coefficient of Dry Gas Meter (Y);
19.22 Total Volume of Liquid Collected in Impingers and Silica Gel;
19.23 Percent Moisture—Actual;
19.24 Dry Molecular Weight of Stack Gas;
19.25 Wet Molecular Weight of Stack Gas;
19.26 Initial Reading of Dry Gas Meter Volume (dcf);
19.27 Final Reading of Dry Gas Meter Volume (dcf);
19.28 Stack Gas Velocity—fps;
19.29 Stack Gas Flow Rate—dscfm;
19.30 Type of Fuel;
19.31 Pollutant Mass Collected (value);
19.32 Pollutant Mass Unit of Measure;
19.33 Detection Limit Flag;
19.34 Pollutant Concentration;
19.35 Pollutant Concentration Unit of Measure;
19.36 Pollutant Emission Rate;
19.37 Pollutant Emission Rate Units of Measure (in units of the standard);
19.38 Compliance Limit Basis (heat input or electrical output);
19.39 Heat Input or Electrical Output Unit of Measure;
19.40 Process Parameter (value);
19.41 Process Parameter Unit of Measure;
19.42 Converted Concentration for PM CEMS only; and
19.43 Converted Concentration Units (units of correlation for PM CEMS).

20.0 *Point-Level Data Elements for EPA test Methods 5, 5B, 5D, 26A, & 29.* To link the point-level data with the run data in the xml schema, you must report the Source ID (*i.e.*, Data Element 18.1), EPA Test Method (Data Element 19.3), Run Number (Data Element 19.4), and Run Begin Date (Data Element 19.8) with the following point-level data elements for each run of each performance stack test, PM CEMS correlation test, RATA, RRA, or RCA conducted using isokinetic EPA test Method 5, 5B, 5D, 26A, or 29. Note that these data elements are required for all EPA test Method 29 applications, whether the method is being used to measure the total or individual HAP metals concentrations:
20.1 Traverse Point ID;
20.2 Stack Temperature;
20.3 Differential Pressure Reading ($\Delta P$);
20.4 Orifice Pressure Reading ($\Delta H$);
20.5 Dry Gas Meter Inlet Temperature;
20.6 Dry Gas Meter Outlet Temperature; and
20.7 Filter Temperature.

21.0 *Laboratory Results for EPA test Methods 29 Total or Individual Multiple HAP Metals.* If you use EPA test Method 29 and elect to comply with the total or individual HAP metals standards, you must report run-level data elements 19.1 through 19.34 in Section 19, and the point-level data elements in Section 20. To link the laboratory data with the run data in the xml schema, you must report the Source ID (*i.e.*, Data Element 18.1), EPA Test Method (Data Element 19.3), Run Number (Data Element 19.4), and Run Begin Date (Data Element 19.8) with the results of the laboratory analyses. Regardless of whether you elect to comply with the total HAP metals standard or the individual HAP metals standard, you must report the front half catch, the back half catch, and the sum of the front and back half catches collected with EPA test Method 29 for each individual HAP metal and for the total HAP metals. The list of individual HAP metals is Antimony, Arsenic, Beryllium, Cadmium, Chromium, Cobalt, Lead, Manganese, Nickel, Selenium, and Mercury (if applicable). You must also calculate and report the pollutant emission rates(s) in relation to the standard(s) with which you have elected to comply and the units specified in Table 5 as follows:
21.1 Each Individual HAP metal total mass collected:
21.1.1 Pollutant Name;
21.1.2 Pollutant Mass Collected;
21.1.3 Pollutant Mass Units of Measure; and
21.1.4 Detection Limit Flag.
21.2 Each Individual HAP metal Front Half:
21.2.1 Pollutant Name;
21.2.2 Pollutant Mass Collected;
21.2.3 Pollutant Mass Units of Measure; and
21.2.4 Detection Limit Flag.
21.3 Each Individual HAP metal Back Half:
21.3.1 Pollutant Name;
21.3.2 Pollutant Mass Collected;
21.3.3 Pollutant Mass Units of Measure; and
21.3.4 Detection Limit Flag.
21.4 Each Individual HAP metal concentration:
21.4.1 Pollutant Name;
21.4.2 Pollutant Concentration; and
21.4.3 Pollutant Concentration Units of Measure.
21.5 Each Individual HAP metal emission rate in units of the standard:
21.5.1 Pollutant Name;
21.5.2 Pollutant Emission Rate; and
21.5.3 Pollutant Emission Rate Units of Measure.
21.6 Each Individual HAP metal emission rate in units of lbs/MMBTU or lbs/MW (per Table 5):
21.6.1 Pollutant Name;
21.6.2 Pollutant Emission Rate; and
21.6.3 Pollutant Emission Rate Units of Measure.

21.7 Total Filterable HAP metals mass collected:
21.7.1 Pollutant Name;
21.7.2 Pollutant Mass Collected;
21.7.3 Pollutant Mass Units of Measure; and
21.7.4 Detection Limit Flag.
21.8 Total Filterable HAP metals concentration:
21.8.1 Pollutant Name;
21.8.2 Pollutant Concentration; and
21.8.3 Pollutant Concentration Units of Measure.
21.9 Total Filterable HAP metals in units of lbs/MMBtu or lbs/MW (per Table 5):
21.9.1 Pollutant Name;
21.9.2 Pollutant Emission Rate; and
21.9.3 Pollutant Emission Rate Units of Measure.
21.10 Total HAP metals mass collected:
21.10.1 Pollutant Name;
21.10.2 Pollutant Mass Collected;
21.10.3 Pollutant Mass Units of Measure; and
21.10.4 Detection Limit Flag.
21.11 Total HAP metals concentration
21.11.1 Pollutant Name;
21.11.2 Pollutant Concentration; and
21.11.3 Pollutant Concentration Units of Measure.
21.12 Total HAP metals Emission Rate in Units of the Standard:
21.12.1 Pollutant Name;
21.12.2 Pollutant Emission Rate; and
21.12.3 Pollutant Emission Rate Units of Measure.
21.13 Total HAP metals Emission Rate in lbs/MMBtu or lbs/MW (per Table 5):
21.13.1 Pollutant Name;
21.13.2 Pollutant Emission Rate; and
21.13.3 Pollutant Emission Rate Units of Measure.
22.0 *Run-Level and Lab Data Elements for EPA test Method 26*. If you use EPA test Method 26, you must report the Source ID (*i.e.,* Data Element 18.1) and the following run-level data elements for each test run. If your EGU is oil-fired and you use EPA test Method 26 to conduct stack tests for both HCl and HF, you must report these data elements separately for each pollutant:
22.1 Test Number;
22.2 Pollutant Name;
22.3 EPA Test Method;
22.4 Run Number;
22.5 Corresponding Reference Method(s), if applicable;
22.6 Corresponding Reference Method(s) Run Number, if applicable;
22.7 Number of Traverse Points;
22.8 Run Begin Date;
22.9 Run Start Time (clock start time);
22.10 Run End Date;
22.11 Run End Time (clock end time);
22.12 Barometric Pressure;
22.13 Cumulative Elapsed Sampling Time;
22.14 Calibration Coefficient of Dry Gas Meter (Y);
22.15 Initial Reading of Dry Gas Meter Volume (dcf);
22.16 Final Reading of Dry Gas Meter Volume (dcf);
22.17 Percent $O_2$;
22.18 Percent $CO_2$;
22.19 Type of Fuel;
22.20 F-Factor ($F_d$, $F_w$, or $F_c$);
22.21 Pollutant Mass Collected (value);
22.22 Pollutant Mass Units of Measure;
22.23 Detection Limit Flag;
22.24 Pollutant Concentration;
22.25 Pollutant Concentration Unit of Measure;
22.26 Compliance Limit Basis (heat input or electrical output);
22.27 Heat Input or Electrical Output Unit of Measure;
22.28 Process Parameter (value);
22.29 Process Parameter Unit of Measure;
22.30 Pollutant Emission Rate; and
22.31 Pollutant Emission Rate Units of Measure (in the units of the standard).
23.0 *Point-Level Data Elements for EPA test Method 26*. To link the point-level data in this section with the run-level data in the XML schema, you must report the Source ID (*i.e.,* Data Element 18.1), EPA Test Method (Data Element 22.3), Run Number (Data Element 22.4), and Run Begin Date (Data Element 22.8) from section 22 and the following point-level data elements for each run of each EPA test Method 26 test:
23.1 Traverse Point ID;
23.2 Filter Temperature; and
23.3 Dry Gas Meter Temperature.
24.0 *Run-Level Data for EPA test Method 30B*. You must report Source ID (*i.e.* Data Element 18.1) and the following run-level data elements for each EPA test Method 30B test run:
24.1 Test Number;
24.2 Pollutant Name;
24.3 EPA Test Method;
24.4 Run Number;
24.5 Corresponding Reference Method(s), if applicable;
24.6 Corresponding Reference Method(s) Run Number, if applicable;
24.7 Number of Traverse Points;
24.8 Run Begin Date;
24.9 Run Start Time (clock time start);
24.10 Run End Date;
24.11 Run End Time (clock time end);
24.12 Barometric Pressure;
24.13 Percent $O_2$;
24.14 Percent $CO_2$;
24.15 Cumulative Elapsed Sampling Time;
24.16 Calibration Coefficient of Dry Gas Meter Box A (Y);
24.17 Initial Reading of Dry Gas Meter Volume (A);
24.18 Final Reading of Dry Gas Meter Volume (A);

24.19 Calibration Coefficient of Dry Gas Meter Box B (Y);
24.20 Initial Reading of Dry Gas Meter Volume (B);
24.21 Final Reading of Dry Gas Meter Volume (B);
24.22 Gas Sample Volume Units of Measure;
24.23 Post-Run Leak Rate (A);
24.24 Post-Run Leak Check Vacuum (A);
24.25 Post-Run Leak Rate (B);
24.26 Post-Run Leak Check Vacuum (B);
24.27 Sorbent Trap ID (A);
24.28 Pollutant Mass Collected, Section 1 (A);
24.29 Pollutant Mass Collected, Section 2 (A);
24.30 Mass of Spike on Sorbent Trap A;
24.31 Total Pollutant Mass Trap A;
24.32 Sorbent Trap ID (B);
24.33 Pollutant Mass Collected, Section 1 (B);
24.34 Pollutant Mass Collected, Section 2 (B);
24.35 Mass of Spike on Sorbent Trap B;
24.36 Total Pollutant Mass Trap B;
24.37 Pollutant Mass Units of Measure;
24.38 Pollutant Average Concentration;
24.39 Pollutant Concentration Units of Measure;
24.40 Method Detection Limit;
24.41 Percent Spike Recovery;
24.42 Type of Fuel;
24.43 F-Factor ($F_d$, $F_w$, or $F_c$);
24.44 Compliance Limit Basis (heat input or electrical output);
24.45 Heat Input or Electrical Output Unit of Measure;
24.46 Process Parameter (value);
24.47 Process Parameter Unit of Measure;
24.48 Pollutant Emission Rate; and
24.49 Pollutant Emission Rate Unit of Measure (in the units of the standard).

25.0 *Point-Level Data Elements for EPA test Method 30B*. You must report the Source ID (*i.e.*, Data Element 18.1), EPA Test Method (Data Element 24.3), Run Number (Data Element 24.4), and Run Begin Date (Data Element 24.8) and the following point-level data elements for each run of each EPA test Method 30B test:
25.1 Traverse Point ID;
25.2 Dry Gas Meter Temperature (A);
25.3 Sample Flow Rate (A) (L/min);
25.4 Dry Gas Meter Temperature (B); and
25.5 Sample Flow Rate (B) (L/min).

26.0 *Pre-Run Data Elements for EPA test Methods 3A and 6C*. You must report the Source ID (*i.e.*, Data Element 18.1) and the following pre-run data elements for each $SO_2$ RATA using instrumental EPA test Method 6C, and for each instrumental EPA test Method 3A $O_2$ or $CO_2$ test that is performed to convert a pollutant concentration to the units of measure of the applicable emission unit of standard in Table 1 or 2 of this subpart:
26.1 Test Number;
26.2 EPA Test Method;
26.3 Calibration Gas Cylinder Analyte;
26.4 Cylinder Gas Units of Measure;
26.5 Date of Calibration;
26.6 Calibration Low-Level Gas Cylinder ID;
26.7 Calibration Low-Level Gas Concentration;
26.8 Calibration Low-Level Cylinder Expiration Date;
26.9 Calibration Mid-Level Gas Cylinder ID;
26.10 Calibration Mid-Level Gas Concentration;
26.11 Calibration Mid-Level Cylinder Expiration Date;
26.12 Calibration High-Level Gas Cylinder ID;
26.13 Calibration Span (High-Level) Gas Concentration;
26.14 Calibration High-Level Cylinder Expiration Date;
26.15 Low-Level Gas Response;
26.16 Low-Level Calibration Error;
26.17 Low-Level Alternate Performance Specification (APS) Flag;
26.18 Mid-Level Gas Response;
26.19 Mid-Level Calibration Error;
26.20 Mid-Level APS Flag;
26.21 High-Level Gas Response;
26.22 High-Level Calibration Error; and
26.23 High-Level APS Flag.

27.0 *Run-Level Data Elements for EPA test Methods 3A and 6C*. You must report the Source ID (*i.e.*, Data Element 18.1) and following run-level data elements for each run of each $SO_2$ RATA using instrumental EPA test Method 6C, and for each run of each corresponding instrumental EPA test Method 3A test that is performed to convert a pollutant concentration to the applicable emission unit of standard in Table 1 or 2 of this subpart:
27.1 Test Number;
27.2 Pollutant or Analyte Name;
27.3 EPA Test Method;
27.4 Run Number;
27.5 Corresponding Reference Method(s), if applicable;
27.6 Corresponding Reference Method(s) Run Number(s), if applicable;
27.7 Number of Traverse Points;
27.8 Run Begin Date;
27.9 Run Start Time (clock time start);
27.10 Run End Date;
27.11 Run End Time (clock time end);
27.12 Cumulative Elapsed Sampling Time;
27.13 Upscale (mid or high) Gas Level;
27.14 Pre-Run Low-Level Response;
27.15 Pre-Run Low-Level System Bias;
27.16 Pre-Run Low-Level Bias APS Flag;
27.17 Pre-Run Upscale (mid or high) Response;
27.18 Pre-Run Upscale (mid or high) System Bias;

27.19 Pre-Run Upscale (mid or high) Bias APS Flag;
27.20 Post-Run Low-Level Response;
27.21 Post-Run Low-Level System Bias;
27.22 Post-Run Low-Level Bias APS Flag;
27.23 Post-Run Low-Level Drift;
27.24 Post-Run Low-Level Drift APS Flag;
27.25 Post-Run Upscale (mid or high) Response;
27.26 Post-Run Upscale (mid or high) System Bias;
27.27 Post-Run Upscale (mid or high) System Bias APS Flag;
27.28 Post-Run Upscale (mid or high) Drift;
27.29 Post-Run Upscale (mid or high) Drift APS Flag;
27.30 Unadjusted Raw Emissions Average Concentration;
27.31 Calculated Average Concentration, Adjusted for Bias ($C_{gas}$);
27.32 Concentration Units of Measure (Dry or wet);
27.33 Type of Fuel;
27.34 Process Parameter (value); and
27.35 Process Parameter Units of Measure.

28.0 *Run-Level Data Elements for EPA test Method 2.* When you make a separate determination of the stack gas flow rate using EPA test Method 2 separately, corresponding to a pollutant reference method test, *i.e.*, when data from the pollutant reference method cannot determine the stack gas flow rate, you must report the Source ID (*i.e.*, Data Element 18.1) and following run-level data elements for each EPA test Method 2 test run:
28.1 Test Number;
28.2 EPA Test Method;
28.3 Run Number;
28.4 Number of Traverse Points;
28.5 Run Begin Date;
28.6 Run Start Time (clock time start);
28.7 Run End Date;
28.8 Run End Time (clock time end);
28.9 Pitot Tube ID;
28.10 Pitot Tube Calibration Coefficient;
28.11 Barometric Pressure;
28.12 Static Pressure;
28.13 Percent $O_2$;
28.14 Percent $CO_2$;
28.15 Percent Moisture—actual;
28.16 Dry Molecular Weight of Stack Gas;
28.17 Wet Molecular Weight of Stack Gas;
28.18 Stack Gas Velocity—fps; and
28.19 Stack Gas Flow Rate—dscfm.

29.0 *Point-Level Data Elements for EPA test Method 2.* For each run of each separate EPA test Method 2 test, you must report the Source ID (*i.e.*, Data Element 18.1), EPA Test Method (Data Element 28.2), Run Number (Data Element 28.3), and Run Begin Date (Data Element 28.5) and the following point-level data elements:
29.1 Traverse Point ID;
29.2 Stack Temperature; and
29.3 Differential Pressure Reading ($\Delta P$).

30.0 *Run-Level Data Elements for EPA test Method 4.* When you make a separate EPA test Method 4 determination of the stack gas moisture content corresponding to a pollutant reference method test, *i.e.*, when data from the pollutant reference method cannot determine the moisture content, you must report the Source ID (*i.e.*, Data Element 18.1) and the following run-level data elements for each EPA test Method 4 test run:
30.1 Test Number;
30.2 EPA Test Method;
30.3 Run Number;
30.4 Number of Traverse Points;
30.5 Run Begin Date;
30.6 Run Start Time (clock time start);
30.7 Run End Date;
30.8 Run End Time (clock time end);
30.9 Barometric Pressure;
30.10 Calibration Coefficient of Dry Gas Meter (Y);
30.11 Volume of Water Collected in Impingers and Silica Gel;
30.12 Percent Moisture-actual;
30.13 Initial Reading of Dry Gas Meter Volume (dcf);
30.14 Final Reading of Dry Gas Meter Volume (dcf); and
30.15 Dry Gas Meter Temperature (average).

31.0 *Other Information for Each Test or Test Series.* You must provide each test included in the XML data file described in this appendix with supporting documentation, in a PDF file submitted concurrently with the XML file, such that all the data required to be reported by 40 CFR 63.7(g) are provided. That supporting data include but are not limited to diagrams showing the location of the test site and the sampling points, laboratory report(s) including analytical calibrations, calibrations of source sampling equipment, calibration gas cylinder certificates, raw instrumental data, field data sheets, quality assurance data (*e.g.* field recovery spikes) and any required audit results and stack testers' credentials (if applicable). The applicable data elements in 40 CFR 63.10031(f)(6)(i) through (xii) of this section must be entered into ECMPS with each PDF submittal; the test number(s) (see 40 CFR 63.10031(f)(6)(xi)) must be included. The test number(s) must match the test number(s) in sections 19 through 31 of this appendix (as applicable).

[85 FR 55775, Sept. 9, 2020]

## Subpart VVVVV [Reserved]

## Subpart WWWWW—National Emission Standards for Hospital Ethylene Oxide Sterilizers

SOURCE: 72 FR 73623, Dec. 28, 2007, unless otherwise noted.

APPLICABILITY AND COMPLIANCE DATES

### §63.10382 Am I subject to this subpart?

(a) You are subject to this subpart if you own or operate an ethylene oxide sterilization facility at a hospital that is an area source of hazardous air pollutant (HAP) emissions.

(b) The affected source subject to this subpart is each new or existing sterilization facility.

(1) An affected source is existing if you commenced construction or reconstruction of the affected source before November 6, 2006.

(2) An affected source is new if you commenced construction or reconstruction of the affected source on or after November 6, 2006.

### §63.10384 What are my compliance dates?

(a) *Existing source.* If you have an existing affected source, you must comply with applicable requirements in this subpart no later than December 29, 2008.

(b) *New source.* If you start up a new affected source on or before December 28, 2007, you must comply with applicable requirements in this subpart by December 28, 2007.

(c) *New source.* If you start up a new affected source after December 28, 2007, you must comply with applicable requirements in this subpart upon startup of your affected source.

STANDARDS

### §63.10390 What management practice standard must I meet?

You must sterilize full loads of items having a common aeration time, except under medically necessary circumstances, as that term is defined in §63.10448.

INITIAL COMPLIANCE REQUIREMENTS

### §63.10400 How do I demonstrate initial compliance?

(a) Except as provided in paragraphs (b) and (c) of this section, you must demonstrate initial compliance with the management practice standard in §63.10390 by submitting an Initial Notification of Compliance Status certifying that you are sterilizing full loads of items having a common aeration time except under medically necessary circumstances.

(b) If you operate your sterilization unit(s) with an air pollution control device pursuant to a State or local regulation, you may demonstrate initial compliance with §63.10390 by submitting an Initial Notification of Compliance Status certifying that you are operating the sterilization unit in accordance with your State or local regulation and following control device manufacturer's recommended procedures.

(c) If you operate your sterilization unit(s) with an air pollution control device but are not subject to any State or local regulation, you may demonstrate initial compliance with §63.10390 by submitting an Initial Notification of Compliance Status certifying that you are venting the ethylene oxide emissions from each sterilization unit to an add-on air pollution control device. You must certify that you are operating the control device during all sterilization processes and in accordance with manufacturer's recommended procedures.

### §63.10402 By what date must I demonstrate initial compliance?

You must demonstrate initial compliance with §63.10390 upon startup or no later than 180 calendar days after your compliance date, whichever is later.

MONITORING—CONTINUOUS COMPLIANCE REQUIREMENTS

### §63.10420 How do I demonstrate continuous compliance with the management practice requirements?

For each sterilization unit not equipped with an air pollution control device, you must demonstrate continuous compliance with the management

practice standard in § 63.10390 by recording the date and time of each sterilization cycle, whether each sterilization cycle contains a full load of items, and if not, a statement from a hospital central services staff, a hospital administrator, or a physician that it was medically necessary.

NOTIFICATIONS, REPORTS, AND RECORDS

### § 63.10430 What notifications must I submit and by when?

(a) You must submit an Initial Notification of Compliance Status that includes the information required in paragraphs (a)(1) through (5) of this section and the applicable certification in § 63.10400.

(1) The name and address of the owner or operator.

(2) The address (i.e., physical location) of the affected source.

(3) An identification of the standard and other applicable requirements in this subpart that serve as the basis of the notification and the source's compliance date.

(4) A brief description of the sterilization facility, including the number of ethylene oxide sterilizers, the size (volume) of each, the number of aeration units, if any, the amount of annual ethylene oxide usage at the facility, the control technique used for each sterilizer, and typical number of sterilization cycles per year.

(5) A statement that the affected source is an area source.

(b) You must submit the Initial Notification of Compliance Status to the appropriate authority(ies) specified in § 63.9(a)(4). In addition, you must submit a copy of the Initial Notification of Compliance Status to EPA's Office of Air Quality Planning and Standards. Send your notification via e-mail to *CCG-ONG@EPA.GOV* or via U.S. mail or other mail delivery service to U.S. EPA, Sector Policies and Programs Division, Coatings and Chemicals Group (E143–01), Attn: Hospital Sterilizers Project Leader, Research Triangle Park, NC 27711.

(c) You must submit the Initial Notification of Compliance Status no later than 180 calendar days after your compliance date, consistent with § 63.10402.

### § 63.10432 What records must I keep?

You must keep the records specified in paragraphs (a) and (b) of this section.

(a) A copy of the Initial Notification of Compliance Status that you submitted to comply with this subpart.

(b) Records required by § 63.10420 for each sterilization unit not equipped with an air pollution control device.

### § 63.10434 In what form and for how long must I keep my records?

(a) Your records must be in a form suitable and readily available for expeditious review.

(b) You must keep each record for 5 years following the date of each record.

(c) You must keep each record onsite for at least 2 years after the date of each record. You may keep the records offsite for the remaining 3 years.

OTHER REQUIREMENTS AND INFORMATION

### § 63.10440 What parts of the General Provisions apply to me?

Table 1 to this subpart shows which parts of the General Provisions in 40 CFR 63.1 through 63.16 apply to you.

### § 63.10442 Who implements and enforces this subpart?

(a) This subpart can be implemented and enforced by us, the U.S. EPA, or a delegated authority such as your State, local, or tribal agency. If the U.S. EPA Administrator has delegated authority to your State, local, or tribal agency, then that agency has the authority to implement and enforce this subpart. You should contact your U.S. EPA Regional Office to find out if this subpart is delegated to your State, local, or tribal agency.

(b) In delegating implementation and enforcement authority of this subpart to a State, local, or tribal agency under 40 CFR part 63, subpart E, the authorities contained in paragraph (c) of this section are retained by the Administrator of the U.S. EPA and are not transferred to the State, local, or tribal agency.

(c) The authorities that will not be delegated to State, local, or tribal

agencies include approval of alternatives to the applicability requirements under 40 CFR 63.10382, the compliance date requirements in 40 CFR 63.10384, and the management practice standards as defined in 40 CFR 63.10390.

### § 63.10446 Do title V permitting requirements apply to area sources subject to this subpart?

You are exempt from the obligation to obtain a permit under 40 CFR part 70 or 40 CFR part 71, provided you are not otherwise required by law to obtain a permit under 40 CFR 70.3(a) or 40 CFR 71.3(a). Notwithstanding the previous sentence, you must continue to comply with the provisions of this subpart.

### § 63.10448 What definitions apply to this subpart?

Terms used in this subpart are defined in the Clean Air Act (CAA), in 40 CFR 63.2, and in this section as follows:

*Aeration process* means any time when ethylene oxide is removed from the aeration unit through the aeration unit vent or from the combination sterilization unit through the sterilization unit vent, while aeration or off-gassing is occurring.

*Aeration unit* means any vessel that is used to facilitate off-gassing of ethylene oxide.

*Air pollution control device* means a catalytic oxidizer, acid-water scrubber, or any other air pollution control equipment that reduces the quantity of ethylene oxide in the effluent gas stream from sterilization and aeration processes.

*Combination sterilization unit* means any enclosed vessel in which both the sterilization process and the aeration process occur within the same vessel, i.e., the vessel is filled with ethylene oxide gas or an ethylene oxide/inert gas mixture for the purpose of sterilizing and is followed by off-gassing of ethylene oxide.

*Common aeration time* means that items require the same length of time to off-gas ethylene oxide.

*Full load* means the maximum number of items that does not impede proper air removal, humidification of the load, or sterilant penetration and evacuation in the sterilization unit.

*Hospital* means a facility that provides medical care and treatment for patients who are acutely ill or chronically ill on an inpatient basis under supervision of licensed physicians and under nursing care offered 24 hours per day. Hospitals include diagnostic and major surgery facilities but exclude doctor's offices, clinics, or other facilities whose primary purpose is to provide medical services to humans or animals on an outpatient basis.

*Hospital central services staff* means a healthcare professional, including manager and technician, who is either directly involved in or responsible for sterile processing at a hospital.

*Medically necessary* means circumstances that a hospital central services staff, a hospital administrator, or a physician concludes, based on generally accepted medical practices, necessitate sterilizing without a full load in order to protect human health.

*State or local regulation* means a regulation at the State or local level that requires a hospital to reduce the quantity of ethylene oxide emissions from ethylene oxide sterilization units.

*Sterilization facility* means the group of ethylene oxide sterilization units at a hospital using ethylene oxide gas or an ethylene oxide/inert gas mixture for the purpose of sterilizing.

*Sterilization process* means any time when ethylene oxide is removed from the sterilization unit or combination sterilization unit through the sterilization unit vent.

*Sterilization unit* means any enclosed vessel that is filled with ethylene oxide gas or an ethylene oxide/inert gas mixture for the purpose of sterilizing. As used in this subpart, the term includes combination sterilization units.

TABLE 1 TO SUBPART WWWWW OF PART 63—APPLICABILITY OF GENERAL PROVISIONS TO SUBPART WWWWW

As required in § 63.10440, you must comply with the requirements of the General Provisions (40 CFR part 63, subpart A) shown in the following table:

| Citation | Subject | Applies to subpart WWWWW | Explanation |
|---|---|---|---|
| § 63.1(a)(1)–(4), (6), (10)–(12), (b)(1), (3). | Applicability | Yes. | |
| § 63.1(a)(5), (7)–(9) | [Reserved]. | | |
| § 63.1(b)(2) | [Reserved]. | | |
| § 63.1(c)(1)–(2) | Applicability of this part after a relevant standard has been set. | Yes | § 63.10446 of this subpart exempts affected sources from the obligation to obtain title V operating permits for purposes of being subject to this subpart. |
| § 63.1(c)(3)–(4) | [Reserved]. | | |
| § 63.1(c)(5) | Subject to notification requirements. | No. | |
| § 63.1(d) | [Reserved]. | | |
| § 63.1(e) | Emission limitation by permit | Yes. | |
| § 63.2 | Definitions | Yes. | |
| § 63.3 | Units and abbreviations | Yes. | |
| § 63.4 | Prohibited activities | Yes. | |
| § 63.5 | Construction/reconstruction | No. | |
| § 63.6(a), (b)(1)–(5), (7) | Compliance with standards and maintenance requirements. | Yes. | |
| § 63.6(b)(6) | [Reserved]. | | |
| § 63.6(c)(1) | Compliance dates for existing sources. | Yes | Subpart WWWWW requires compliance 1 year after the effective date. |
| § 63.6(c)(2), (5) | Compliance dates for CAA section 112(f) standards and for area sources that become major. | No. | |
| § 63.6(c)(3)–(4) | [Reserved]. | | |
| § 63.6(d) | [Reserved]. | | |
| § 63.6(e)–(h) | Alternative nonopacity emission standard. | No. | |
| § 63.6(i)–(j) | Compliance extension | Yes. | |
| § 63.7 | Performance testing requirements. | No. | |
| § 63.8 | Monitoring requirements | No. | |
| § 63.9(a) | Applicability and initial notifications addressees. | Yes. | |
| § 63.9(b) | Initial notifications | No. | |
| § 63.9(c) | Request for extension of compliance. | Yes. | |
| § 63.9(d)–(i) | Other notifications | No. | |
| § 63.9(j)–(k) | Change in information already submitted Electronic reporting. | Yes. | |
| § 63.10(a)(1)–(2) | Recordkeeping and reporting requirements, applicability. | Yes. | |
| § 63.10(a)(3)–(4) | General information | Yes. | |
| § 63.10(a)(5)–(7) | Recordkeeping and reporting requirements, reporting schedules. | No. | |
| § 63.10(b)(1) | Retention time | Yes. | |
| § 63.10(b)(2)–(f) | Recordkeeping and reporting requirements. | No. | |
| § 63.11 | Control device requirements | No. | |
| § 63.12 | State authority and delegations | Yes. | |
| §§ 63.13–63.16 | Addresses, Incorporations by Reference, availability of information, performance track provisions. | Yes. | |

[72 FR 73623, Dec. 28, 2007, as amended at 85 FR 73918, Nov. 19, 2020

## Subpart XXXXX [Reserved]

## Subpart YYYYY—National Emission Standards for Hazardous Air Pollutants for Area Sources: Electric Arc Furnace Steelmaking Facilities

SOURCE: 72 FR 74111, Dec. 28, 2007, unless otherwise noted.

APPLICABILITY AND COMPLIANCE DATES

### §63.10680 Am I subject to this subpart?

(a) You are subject to this subpart if you own or operate an electric arc furnace (EAF) steelmaking facility that is an area source of hazardous air pollutant (HAP) emissions.

(b) This subpart applies to each new or existing affected source. The affected source is each EAF steelmaking facility.

(1) An affected source is existing if you commenced construction or reconstruction of the affected source on or before September 20, 2007.

(2) An affected source is new if you commenced construction or reconstruction of the affected source after September 20, 2007.

(c) This subpart does not apply to research and development facilities, as defined in section 112(c)(7) of the Clean Air Act (CAA).

(d) If you own or operate an area source subject to this subpart, you must have or obtain a permit under 40 CFR part 70 or 40 CFR part 71.

### §63.10681 What are my compliance dates?

(a) Except as provided in paragraph (b) of this section, if you own or operate an existing affected source, you must achieve compliance with the applicable provisions of this subpart by no later than June 30, 2008.

(b) If you own or operate an existing affected source, you must achieve compliance with opacity limit in §63.10686(b)(2) or (c)(2) by no later than December 28, 2010 if you demonstrate to the satisfaction of the permitting authority that additional time is needed to install or modify emission control equipment.

(c) If you start up a new affected source on or before December 28, 2007, you must achieve compliance with the applicable provisions of this subpart by no later than December 28, 2007.

(d) If you start up a new affected source after December 28, 2007, you must achieve compliance with the applicable provisions of this subpart upon startup of your affected source.

STANDARDS AND COMPLIANCE REQUIREMENTS

### §63.10685 What are the requirements for the control of contaminants from scrap?

(a) *Chlorinated plastics, lead, and free organic liquids.* For metallic scrap utilized in the EAF at your facility, you must comply with the requirements in either paragraph (a)(1) or (2) of this section. You may have certain scrap at your facility subject to paragraph (a)(1) of this section and other scrap subject to paragraph (a)(2) of this section provided the scrap remains segregated until charge make-up.

(1) *Pollution prevention plan.* For the production of steel other than leaded steel, you must prepare and implement a pollution prevention plan for metallic scrap selection and inspection to minimize the amount of chlorinated plastics, lead, and free organic liquids that is charged to the furnace. For the production of leaded steel, you must prepare and implement a pollution prevention plan for scrap selection and inspection to minimize the amount of chlorinated plastics and free organic liquids in the scrap that is charged to the furnace. You must submit the scrap pollution prevention plan to the permitting authority for approval. You must operate according to the plan as submitted during the review and approval process, operate according to the approved plan at all times after approval, and address any deficiency identified by the permitting authority within 60 days following disapproval of a plan. You may request approval to revise the plan and may operate according to the revised plan unless and until the revision is disapproved by the permitting authority. You must keep a copy of the plan onsite, and you must

provide training on the plan's requirements to all plant personnel with materials acquisition or inspection duties. Each plan must include the information in paragraphs (a)(1)(i) through (iii) of this section:

(i) Specifications that scrap materials must be depleted (to the extent practicable) of undrained used oil filters, chlorinated plastics, and free organic liquids at the time of charging to the furnace.

(ii) A requirement in your scrap specifications for removal (to the extent practicable) of lead-containing components (such as batteries, battery cables, and wheel weights) from the scrap, except for scrap used to produce leaded steel.

(iii) Procedures for determining if the requirements and specifications in paragraph (a)(1) of this section are met (such as visual inspection or periodic audits of scrap providers) and procedures for taking corrective actions with vendors whose shipments are not within specifications.

(iv) The requirements of paragraph (a)(1) of this section do not apply to the routine recycling of baghouse bags or other internal process or maintenance materials in the furnace. These exempted materials must be identified in the pollution prevention plan.

(2) *Restricted metallic scrap.* For the production of steel other than leaded steel, you must not charge to a furnace metallic scrap that contains scrap from motor vehicle bodies, engine blocks, oil filters, oily turnings, machine shop borings, transformers or capacitors containing polychlorinated biphenyls, lead-containing components, chlorinated plastics, or free organic liquids. For the production of leaded steel, you must not charge to the furnace metallic scrap that contains scrap from motor vehicle bodies, engine blocks, oil filters, oily turnings, machine shop borings, transformers or capacitors containing polychlorinated biphenyls, chlorinated plastics, or free organic liquids. This restriction does not apply to any post-consumer engine blocks, post-consumer oil filters, or oily turnings that are processed or cleaned to the extent practicable such that the materials do not include lead components, chlorinated plastics, or free organic liquids. This restriction does not apply to motor vehicle scrap that is charged to recover the chromium or nickel content if you meet the requirements in paragraph (b)(3) of this section.

(b) *Mercury requirements.* For scrap containing motor vehicle scrap, you must procure the scrap pursuant to one of the compliance options in paragraphs (b)(1), (2), or (3) of this section for each scrap provider, contract, or shipment. For scrap that does not contain motor vehicle scrap, you must procure the scrap pursuant to the requirements in paragraph (b)(4) of this section for each scrap provider, contract, or shipment. You may have one scrap provider, contract, or shipment subject to one compliance provision and others subject to another compliance provision.

(1) *Site-specific plan for mercury switches.* You must comply with the requirements in paragraphs (b)(1)(i) through (v) of this section.

(i) You must include a requirement in your scrap specifications for removal of mercury switches from vehicle bodies used to make the scrap.

(ii) You must prepare and operate according to a plan demonstrating how your facility will implement the scrap specification in paragraph (b)(1)(i) of this section for removal of mercury switches. You must submit the plan to the permitting authority for approval. You must operate according to this plan as submitted during the review and approval process, operate according to the approved plan at all times after approval, and address any deficiency identified by the permitting authority within 60 days following disapproval of a plan. You may request approval to revise the plan and may operate according to the revised plan unless and until the revision is disapproved by the permitting authority. The permitting authority may change the approval status of the plan upon 90-days written notice based upon the semiannual compliance report or other information. The plan must include:

(A) A means of communicating to scrap purchasers and scrap providers the need to obtain or provide motor vehicle scrap from which mercury switches have been removed and the need to

ensure the proper management of the mercury switches removed from that scrap as required under the rules implementing subtitle C of the Resource Conservation and Recovery Act (RCRA) (40 CFR parts 261 through 265 and 268). The plan must include documentation of direction to appropriate staff to communicate to suppliers throughout the scrap supply chain the need to promote the removal of mercury switches from end-of-life vehicles. Upon the request of the permitting authority, you must provide examples of materials that are used for outreach to suppliers, such as letters, contract language, policies for purchasing agents, and scrap inspection protocols;

(B) Provisions for obtaining assurance from scrap providers that motor vehicle scrap provided to the facility meet the scrap specification;

(C) Provisions for periodic inspections or other means of corroboration to ensure that scrap providers and dismantlers are implementing appropriate steps to minimize the presence of mercury switches in motor vehicle scrap and that the mercury switches removed are being properly managed, including the minimum frequency such means of corroboration will be implemented; and

(D) Provisions for taking corrective actions (i.e., actions resulting in scrap providers removing a higher percentage of mercury switches or other mercury-containing components) if needed, based on the results of procedures implemented in paragraph (b)(1)(ii)(C) of this section).

(iii) You must require each motor vehicle scrap provider to provide an estimate of the number of mercury switches removed from motor vehicle scrap sent to your facility during the previous year and the basis for the estimate. The permitting authority may request documentation or additional information at any time.

(iv) You must establish a goal for each scrap provider to remove at least 80 percent of the mercury switches. Although a site-specific plan approved under paragraph (b)(1) of this section may require only the removal of convenience light switch mechanisms, the permitting authority will credit all documented and verifiable mercury-containing components removed from motor vehicle scrap (such as sensors in anti-locking brake systems, security systems, active ride control, and other applications) when evaluating progress towards the 80 percent goal.

(v) For each scrap provider, you must submit semiannual progress reports to the permitting authority that provide the number of mercury switches removed or the weight of mercury recovered from the switches, the estimated number of vehicles processed, an estimate of the percent of mercury switches removed, and certification that the removed mercury switches were recycled at RCRA-permitted facilities or otherwise properly managed pursuant to RCRA subtitle C regulations referenced in paragraph (b)(1)(ii)(A) of this section. This information can be submitted in aggregated form and does not have to be submitted for each scrap provider, contract, or shipment. The permitting authority may change the approval status of a site-specific plan following 90-days notice based on the progress reports or other information.

(2) *Option for approved mercury programs.* You must certify in your notification of compliance status that you participate in and purchase motor vehicle scrap only from scrap providers who participate in a program for removal of mercury switches that has been approved by the Administrator based on the criteria in paragraphs (b)(2)(i) through (iii) of this section. If you purchase motor vehicle scrap from a broker, you must certify that all scrap received from that broker was obtained from other scrap providers who participate in a program for the removal of mercury switches that has been approved by the Administrator based on the criteria in paragraphs (b)(2)(i) through (iii) of this section. The National Vehicle Mercury Switch Recovery Program and the Vehicle Switch Recovery Program mandated by Maine State law are EPA-approved programs under paragraph (b)(2) of this section unless and until the Administrator disapproves the program (in part or in whole) under paragraph (b)(2)(iii) of this section.

(i) The program includes outreach that informs the dismantlers of the need for removal of mercury switches

and provides training and guidance for removing mercury switches;

(ii) The program has a goal to remove at least 80 percent of mercury switches from the motor vehicle scrap the scrap provider processes. Although a program approved under paragraph (b)(2) of this section may require only the removal of convenience light switch mechanisms, the Administrator will credit all documented and verifiable mercury-containing components removed from motor vehicle scrap (such as sensors in anti-locking brake systems, security systems, active ride control, and other applications) when evaluating progress towards the 80 percent goal; and

(iii) The program sponsor agrees to submit progress reports to the Administrator no less frequently than once every year that provide the number of mercury switches removed or the weight of mercury recovered from the switches, the estimated number of vehicles processed, an estimate of the percent of mercury switches recovered, and certification that the recovered mercury switches were recycled at facilities with permits as required under the rules implementing subtitle C of RCRA (40 CFR parts 261 through 265 and 268). The progress reports must be based on a database that includes data for each program participant; however, data may be aggregated at the State level for progress reports that will be publicly available. The Administrator may change the approval status of a program or portion of a program (e.g., at the State level) following 90-days notice based on the progress reports or on other information.

(iv) You must develop and maintain onsite a plan demonstrating the manner through which your facility is participating in the EPA-approved program.

(A) The plan must include facility-specific implementation elements, corporate-wide policies, and/or efforts coordinated by a trade association as appropriate for each facility.

(B) You must provide in the plan documentation of direction to appropriate staff to communicate to suppliers throughout the scrap supply chain the need to promote the removal of mercury switches from end-of-life vehicles. Upon the request of the permitting authority, you must provide examples of materials that are used for outreach to suppliers, such as letters, contract language, policies for purchasing agents, and scrap inspection protocols.

(C) You must conduct periodic inspections or provide other means of corroboration to ensure that scrap providers are aware of the need for and are implementing appropriate steps to minimize the presence of mercury in scrap from end-of-life vehicles.

(3) *Option for specialty metal scrap.* You must certify in your notification of compliance status that the only materials from motor vehicles in the scrap are materials recovered for their specialty alloy (including, but not limited to, chromium, nickel, molybdenum, or other alloys) content (such as certain exhaust systems) and, based on the nature of the scrap and purchase specifications, that the type of scrap is not reasonably expected to contain mercury switches.

(4) *Scrap that does not contain motor vehicle scrap.* For scrap not subject to the requirements in paragraphs (b)(1) through (3) of this section, you must certify in your notification of compliance status and maintain records of documentation that this scrap does not contain motor vehicle scrap.

(c) *Recordkeeping and reporting requirements.* In addition to the records required by § 63.10, you must keep records to demonstrate compliance with the requirements for your pollution prevention plan in paragraph (a)(1) of this section and/or for the use of only restricted scrap in paragraph (a)(2) of this section and for mercury in paragraphs (b)(1) through (3) of this section as applicable. You must keep records documenting compliance with paragraph (b)(4) of this section for scrap that does not contain motor vehicle scrap.

(1) If you are subject to the requirements for a site-specific plan for mercury under paragraph (b)(1) of this section, you must:

(i) Maintain records of the number of mercury switches removed or the weight of mercury recovered from the switches and properly managed, the estimated number of vehicles processed,

and an estimate of the percent of mercury switches recovered; and

(ii) Submit semiannual reports of the number of mercury switches removed or the weight of mercury recovered from the switches and properly managed, the estimated number of vehicles processed, an estimate of the percent of mercury switches recovered, and a certification that the recovered mercury switches were recycled at RCRA-permitted facilities. The semiannual reports must include a certification that you have conducted inspections or taken other means of corroboration as required under paragraph (b)(1)(ii)(C) of this section. You may include this information in the semiannual compliance reports required under paragraph (c)(3) of this section.

(2) If you are subject to the option for approved mercury programs under paragraph (b)(2) of this section, you must maintain records identifying each scrap provider and documenting the scrap provider's participation in an approved mercury switch removal program. If you purchase motor vehicle scrap from a broker, you must maintain records identifying each broker and documentation that all scrap provided by the broker was obtained from other scrap providers who participate in an approved mercury switch removal program.

(3) You must submit semiannual compliance reports to the Administrator for the control of contaminants from scrap according to the requirements in § 63.10(e). The report must clearly identify any deviation from the requirements in paragraphs (a) and (b) of this section and the corrective action taken. You must identify which compliance option in paragraph (b) of this section applies to each scrap provider, contract, or shipment.

### § 63.10686 What are the requirements for electric arc furnaces and argon-oxygen decarburization vessels?

(a) You must install, operate, and maintain a capture system that collects the emissions from each EAF (including charging, melting, and tapping operations) and argon-oxygen decarburization (AOD) vessel and conveys the collected emissions to a control device for the removal of particulate matter (PM).

(b) Except as provided in paragraph (c) of this section, you must not discharge or cause the discharge into the atmosphere from an EAF or AOD vessel any gases which:

(1) Exit from a control device and contain in excess of 0.0052 grains of PM per dry standard cubic foot (gr/dscf); and

(2) Exit from a melt shop and, due solely to the operations of any affected EAF(s) or AOD vessel(s), exhibit 6 percent opacity or greater.

(c) If you own or operate a new or existing affected source that has a production capacity of less than 150,000 tons per year (tpy) of stainless or specialty steel (as determined by the maximum production if specified in the source's operating permit or EAF capacity and maximum number of operating hours per year), you must not discharge or cause the discharge into the atmosphere from an EAF or AOD vessel any gases which:

(1) Exit from a control device and contain particulate matter (PM) in excess of 0.8 pounds per ton (lb/ton) of steel. Alternatively, the owner or operator may elect to comply with a PM limit of 0.0052 grains per dry standard cubic foot (gr/dscf); and

(2) Exit from a melt shop and, due solely to the operations of any affected EAF(s) or AOD vessel(s), exhibit 6 percent opacity or greater.

(d) Except as provided in paragraph (d)(6) of this section, you must conduct performance tests to demonstrate initial compliance with the applicable emissions limit for each emissions source subject to an emissions limit in paragraph (b) or (c) of this section.

(1) You must conduct each PM performance test for an EAF or AOD vessel according to the procedures in § 63.7 and 40 CFR 60.275a using the following test methods in 40 CFR part 60, appendices A–1, A–2, A–3, and A–4:

(i) Method 1 or 1A of appendix A–1 of 40 CFR part 60 to select sampling port locations and the number of traverse points in each stack or duct. Sampling sites must be located at the outlet of the control device (or at the outlet of

the emissions source if no control device is present) prior to any releases to the atmosphere.

(ii) Method 2, 2A, 2C, 2D, 2F, or 2G of appendix A–1 of 40 CFR part 60 to determine the volumetric flow rate of the stack gas.

(iii) Method 3, 3A, or 3B of appendix A–3 of 40 CFR part 60 to determine the dry molecular weight of the stack gas. You may use ANSI/ASME PTC 19.10–1981, ''Flue and Exhaust Gas Analyses'' (incorporated by reference—see § 63.14) as an alternative to EPA Method 3B.

(iv) Method 4 of appendix A–3 of 40 CFR part 60 to determine the moisture content of the stack gas.

(v) Method 5 or 5D of appendix A–3 of 40 CFR part 60 to determine the PM concentration. Three valid test runs are needed to comprise a PM performance test. For EAF, sample only when metal is being melted and refined. For AOD vessels, sample only when the operation(s) are being conducted.

(2) You must conduct each opacity test for a melt shop according to the procedures in § 63.6(h) and Method 9 of appendix A–4 of 40 CFR part 60. When emissions from any EAF or AOD vessel are combined with emissions from emission sources not subject to this subpart, you must demonstrate compliance with the melt shop opacity limit based on emissions from only the emission sources subject to this subpart.

(3) During any performance test, you must monitor and record the information specified in 40 CFR 60.274a(h) for all heats covered by the test.

(4) You must notify and receive approval from the Administrator for procedures that will be used to determine compliance for an EAF or AOD vessel when emissions are combined with those from facilities not subject to this subpart.

(5) To determine compliance with the PM emissions limit in paragraph (c) of this section for an EAF or AOD vessel in a lb/ton of steel format, compute the process-weighted mass emissions ($E_p$) for each test run using Equation 1 of this section:

$$E_p = \frac{C \times Q \times T}{P \times K} \qquad \text{(Eq. 1)}$$

Where:

$E_p$ = Process-weighted mass emissions of PM, lb/ton;

C = Concentration of PM or total metal HAP, gr/dscf;

Q = Volumetric flow rate of stack gas, dscf/hr;

T = Total time during a test run that a sample is withdrawn from the stack during steel production cycle, hr;

P = Total amount of metal produced during the test run, tons; and

K = Conversion factor, 7,000 grains per pound.

(6) If you own or operate an existing affected source that is subject to the emissions limits in paragraph (b) or (c) of this section, you may certify initial compliance with the applicable emission limit for one or more emissions sources based on the results of a previous performance test for that emissions source in lieu of the requirement for an initial performance test provided that the test(s) were conducted within 5 years of the compliance date using the methods and procedures specified in paragraph (d)(1) or (2) of this section; the test(s) were for the affected facility; and the test(s) were representative of current or anticipated operating processes and conditions. Should the permitting authority deem the prior test data unacceptable to demonstrate compliance with an applicable emissions limit, the owner or operator must conduct an initial performance test within 180 days of the compliance date or within 90 days of receipt of the notification of disapproval of the prior test, whichever is later.

(e) You must monitor the capture system and PM control device required by this subpart, maintain records, and submit reports according to the compliance assurance monitoring requirements in 40 CFR part 64. The exemption in 40 CFR 64.2(b)(1)(i) for emissions limitations or standards proposed after November 15, 1990 under section 111 or 112 of the CAA does not apply. In lieu of the deadlines for submittal in 40 CFR 64.5, you must submit the monitoring information required by 40 CFR 64.4 to the applicable permitting authority for approval by no later than the compliance date for your affected source for this subpart and operate according to the approved plan by no later than 180 days after the date of approval by the permitting authority.

OTHER INFORMATION AND REQUIREMENTS

### §63.10690 What parts of the General Provisions apply to this subpart?

(a) You must comply with the requirements of the NESHAP General Provisions (40 CFR part 63, subpart A) as provided in Table 1 of this subpart.

(b) The notification of compliance status required by §63.9(h) must include each applicable certification of compliance, signed by a responsible official, in paragraphs (b)(1) through (6) of this section.

(1) For the pollution prevention plan requirements in §63.10685(a)(1): ''This facility has submitted a pollution prevention plan for metallic scrap selection and inspection in accordance with §63.10685(a)(1)'';

(2) For the restrictions on metallic scrap in §63.10685(a)(2): ''This facility complies with the requirements for restricted metallic scrap in accordance with §63.10685(a)(2)'';

(3) For the mercury requirements in §63.10685(b):

(i) ''This facility has prepared a site-specific plan for mercury switches in accordance with §63.10685(b)(1)'';

(ii) ''This facility participates in and purchases motor vehicle scrap only from scrap providers who participate in a program for removal of mercury switches that has been approved by the EPA Administrator in accordance with §63.10685(b)(2)'' and has prepared a plan demonstrating how the facility participates in the EPA-approved program in accordance with §63.10685(b)(2)(iv);

(iii) ''The only materials from motor vehicles in the scrap charged to an electric arc furnace at this facility are materials recovered for their specialty alloy content in accordance with §63.10685(b)(3) which are not reasonably expected to contain mercury switches''; or

(iv) ''This facility complies with the requirements for scrap that does not contain motor vehicle scrap in accordance with §63.10685(b)(4).''

(4) This certification of compliance for the capture system requirements in §63.10686(a), signed by a responsible official: ''This facility operates a capture system for each electric arc furnace and argon-oxygen decarburization vessel that conveys the collected emissions to a PM control device in accordance with §63.10686(a)''.

(5) If applicable, this certification of compliance for the performance test requirements in §63.10686(d)(6): ''This facility certifies initial compliance with the applicable emissions limit in §63.10686(a) or (b) based on the results of a previous performance test in accordance with §63.10686(d)(6)''.

(6) This certification of compliance for the monitoring requirements in §63.10686(e), signed by a responsible official: ''This facility has developed and submitted proposed monitoring information in accordance with 40 CFR part 64''.

### §63.10691 Who implements and enforces this subpart?

(a) This subpart can be implemented and enforced by the EPA or a delegated authority such as a State, local, or tribal agency. If the EPA Administrator has delegated authority to a State, local, or tribal agency, then that Agency has the authority to implement and enforce this subpart. You should contact your EPA Regional Office to find out if this subpart is delegated to your State, local, or tribal agency.

(b) In delegating implementation and enforcement authority of this subpart to a State, local, or tribal agency under 40 CFR part 63, subpart E, the authorities contained in paragraph (c) of this section are retained by the Administrator and are not transferred to the State, local, or tribal agency.

(c) The authorities that will not be delegated to State, local, or tribal agencies are listed in paragraphs (c)(1) through (6) of this section.

(1) Approval of an alternative non-opacity emissions standard under 40 CFR 63.6(g).

(2) Approval of an alternative opacity emissions standard under §63.6(h)(9).

(3) Approval of a major change to test methods under §63.7(e)(2)(ii) and (f). A ''major change to test method'' is defined in 40 CFR 63.90.

(4) Approval of major change to monitoring under 40 CFR 63.8(f). A ''major change to monitoring'' is defined in 40 CFR 63.90.

(5) Approval of a major change to recordkeeping/reporting under 40 CFR

63.10(f). A ''major change to recordkeeping/reporting'' is defined in 40 CFR 63.90.

(6) Approval of a program for the removal of mercury switches under § 63.10685(b)(2).

### § 63.10692 What definitions apply to this subpart?

Terms used in this subpart are defined in the Clean Air Act, in § 63.2, and in this section as follows:

*Argon-oxygen decarburization (AOD) vessel* means any closed-bottom, refractory-lined converter vessel with submerged tuyeres through which gaseous mixtures containing argon and oxygen or nitrogen may be blown into molten steel for further refining.

*Capture system* means the equipment (including ducts, hoods, fans, dampers, etc.) used to capture or transport emissions generated by an electric arc furnace or argon-oxygen decarburization vessel to the air pollution control device.

*Chlorinated plastics* means solid polymeric materials that contain chlorine in the polymer chain, such as polyvinyl chloride (PVC) and PVC copolymers.

*Control device* means the air pollution control equipment used to remove particulate matter from the effluent gas stream generated by an electric arc furnace or argon-oxygen decarburization vessel.

*Deviation* means any instance where an affected source subject to this subpart, or an owner or operator of such a source:

(1) Fails to meet any requirement or obligation established by this subpart, including but not limited to any emissions limitation or work practice standard;

(2) Fails to meet any term or condition that is adopted to implement an applicable requirement in this subpart and that is included in the operating permit for any affected source required to obtain such a permit; or

(3) Fails to meet any emissions limitation in this subpart during startup, shutdown, or malfunction, regardless of whether or not such failure is permitted by this subpart.

*Electric arc furnace (EAF)* means a furnace that produces molten steel and heats the charge materials with electric arcs from carbon electrodes. An electric arc furnace consists of the furnace shell, roof, and the transformer.

*Electric arc furnace (EAF) steelmaking facility* means a steel plant that produces carbon, alloy, or specialty steels using an EAF. This definition excludes EAF steelmaking facilities at steel foundries and EAF facilities used to produce nonferrous metals.

*Free organic liquids* means material that fails the paint filter test by EPA Method 9095B, (revision 2, dated November 1994) (incorporated by reference—see § 63.14) after accounting for water using a moisture determination test by ASTM Method D2216–05 (incorporated by reference—see § 63.14). If, after conducting a moisture determination test, if any portion of the material passes through and drops from the filter within the 5-minute test period, the material contains *free organic liquids*.

*Leaded steel* means steel that must meet a minimum specification for lead content (typically 0.25 percent or more) and for which lead is a necessary alloy for that grade of steel.

*Mercury switch* means each mercury-containing capsule or switch assembly that is part of a convenience light switch mechanism installed in a vehicle.

*Motor vehicle* means an automotive vehicle not operated on rails and usually operated with rubber tires for use on highways.

*Motor vehicle scrap* means vehicle or automobile bodies, including automobile body hulks, that have been processed through a shredder. *Motor vehicle scrap* does not include automobile manufacturing bundles, or miscellaneous vehicle parts, such as wheels, bumpers or other components that do not contain mercury switches.

*Nonferrous metals* means any pure metal other than iron or any metal alloy for which an element other than iron is its major constituent by percent in weight.

*Scrap provider* means the person (including a broker) who contracts directly with a steel mill to provide scrap that contains motor vehicle scrap. Scrap processors such as shredder operators or vehicle dismantlers that do not sell scrap directly to a steel mill are not *scrap providers*.

*Specialty steel* means low carbon and high alloy steel other than stainless steel that is processed in an argon-oxygen decarburization vessel.

*Stainless steel* means low carbon steel that contains at least 10.5 percent chromium.

TABLE 1 TO SUBPART YYYYY OF PART 63—APPLICABILITY OF GENERAL PROVISIONS TO SUBPART YYYYY

As required in §63.10691(a), you must comply with the requirements of the NESHAP General Provisions (40 CFR part 63, subpart A) shown in the following table.

| Citation | Subject | Applies to subpart YYYYY? | Explanation |
|---|---|---|---|
| §63.1(a)(1), (a)(2), (a)(3), (a)(4), (a)(6), (a)(10)–(a)(12), (b)(1), (b)(3), (c)(1), (c)(2), (c)(5), (e). | Applicability | Yes. | |
| §63.1(a)(5), (a)(7)–(a)(9), (b)(2), (c)(3), (c)(4), (d). | Reserved | No. | |
| §63.2 | Definitions | Yes. | |
| §63.3 | Units and Abbreviations | Yes. | |
| §63.4 | Prohibited Activities and Circumvention. | Yes. | |
| §63.5 | Preconstruction Review and Notification Requirements. | Yes. | |
| §63.6(a), (b)(1)–(b)(5), (b)(7), (c)(1), (c)(2), (c)(5), (e)(1), (e)(3)(i), (e)(3)(iii)–(e)(3)(ix), (f), (g), (h)(1), (h)(2), (h)(5)–(h)(9), (i), (j). | Compliance with Standards and Maintenance Requirements. | Yes. | |
| §63.6(b)(6), (c)(3), (c)(4), (d), (e)(2), (e)(3)(ii), (h)(3), (h)(5)(iv). | Reserved | No. | |
| §63.7 | Applicability and Performance Test Dates. | Yes. | |
| §63.8(a)(1), (a)(2), (b), (c), (d), (e), (f)(1)–(5), (g). | Monitoring Requirements | Yes | Requirements apply if a COMS or CEMS is used. |
| §63.8(a)(3) | [Reserved] | No. | |
| §63.8(a)(4) | Additional Monitoring Requirements for Control Devices in §63.11. | No. | |
| §63.8(c)(4) | Continuous Monitoring System Requirements. | Yes | Requirements apply if a COMS or CEMS is used. |
| §63.8(f)(6) | RATA Alternative | Yes | Requirements apply if a CEMS is used. |
| §63.9(a), (b)(1), (b)(2), (b)(5), (c), (d), (f), (g), (h)(1)–(h)(3), (h)(5), (h)(6), (i), (j). | Notification Requirements | Yes. | |
| §63.9(b)(3), (h)(4) | Reserved | No. | |
| §63.9(b)(4) | | No. | |
| §63.10(a), (b)(1), (b)(2)(i)–(v), (b)(2)(xiv), (b)(3), (c)(1), (c)(5)–(c)(8), (c)(10)–(c)(15), (d), (e)(1)–(e)(4), (f). | Recordkeeping and Reporting Requirements. | Yes | Additional records for CMS in §63.10(c) (1)–(6), (9)–(15), and reports in §63.10(d)(1)–(2) apply if a COMS or CEMS is used. |
| §63.10(b)(2)(xiii) | CMS Records for RATA Alternative. | Yes | Requirements apply if a CEMS is used. |
| §63.10(c)(2)–(c)(4), (c)(9) | Reserved | No. | |
| §63.11 | Control Device Requirements | No. | |
| §63.12 | State Authority and Delegations | Yes. | |
| §§63.13–63.16 | Addresses, Incorporations by Reference, Availability of Information, Performance Track Provisions. | Yes. | |

## Subpart ZZZZZ—National Emission Standards for Hazardous Air Pollutants for Iron and Steel Foundries Area Sources

SOURCE: 73 FR 252, Jan. 2, 2008, unless otherwise noted.

APPLICABILITY AND COMPLIANCE DATES

### § 63.10880 Am I subject to this subpart?

(a) You are subject to this subpart if you own or operate an iron and steel foundry that is an area source of hazardous air pollutant (HAP) emissions.

(b) This subpart applies to each new or existing affected source. The affected source is each iron and steel foundry.

(1) An affected source is existing if you commenced construction or reconstruction of the affected source before September 17, 2007.

(2) An affected source is new if you commenced construction or reconstruction of the affected source on or after September 17, 2007. If an affected source is not new pursuant to the preceding sentence, it is not new as a result of a change in its compliance obligations pursuant to § 63.10881(d).

(c) On and after January 2, 2008, if your iron and steel foundry becomes a major source as defined in § 63.2, you must meet the requirements of 40 CFR part 63, subpart EEEEE.

(d) This subpart does not apply to research and development facilities, as defined in section 112(c)(7) of the Clean Air Act.

(e) You are exempt from the obligation to obtain a permit under 40 CFR part 70 or 40 CFR part 71, provided you are not otherwise required by law to obtain a permit under 40 CFR 70.3(a) or 40 CFR 71.3(a). Notwithstanding the previous sentence, you must continue to comply with the provisions of this subpart.

(f) If you own or operate an existing affected source, you must determine the initial applicability of the requirements of this subpart to a small foundry or a large foundry based on your facility's metal melt production for calendar year 2008. If the metal melt production for calendar year 2008 is 20,000 tons or less, your area source is a small foundry. If your metal melt production for calendar year 2008 is greater than 20,000 tons, your area source is a large foundry. You must submit a written notification to the Administrator that identifies your area source as a small foundry or a large foundry no later than January 2, 2009.

(g) If you own or operate a new affected source, you must determine the initial applicability of the requirements of this subpart to a small foundry or a large foundry based on your facility's annual metal melting capacity at startup. If the annual metal melting capacity is 10,000 tons or less, your area source is a small foundry. If the annual metal melting capacity is greater than 10,000 tons, your area source is a large foundry. You must submit a written notification to the Administrator that identifies your area source as a small foundry or a large foundry no later than 120 days after startup.

### § 63.10881 What are my compliance dates?

(a) If you own or operate an existing affected source, you must achieve compliance with the applicable provisions of this subpart by the dates in paragraphs (a)(1) through (3) of this section.

(1) Not later than January 2, 2009 for the pollution prevention management practices for metallic scrap in § 63.10885(a) and binder formulations in § 63.10886.

(2) Not later than January 4, 2010 for the pollution prevention management practices for mercury in § 63.10885(b).

(3) Except as provided in paragraph (d) of this section, not later than 2 years after the date of your large foundry's notification of the initial determination required in § 63.10880(f) for the standards and management practices in § 63.10895.

(b) If you have a new affected source for which the initial startup date is on or before January 2, 2008, you must achieve compliance with the provisions of this subpart not later than January 2, 2008.

(c) If you own or operate a new affected source for which the initial startup date is after January 2, 2008, you must achieve compliance with the provisions of this subpart upon startup of your affected source.

(d) Following the initial determination for an existing affected source required in §63.10880(f),

(1) Beginning January 1, 2010, if the annual metal melt production of your small foundry exceeds 20,000 tons during the preceding calendar year, you must submit a notification of foundry reclassification to the Administrator within 30 days and comply with the requirements in paragraphs (d)(1)(i) or (ii) of this section, as applicable.

(i) If your small foundry has never been classified as a large foundry, you must comply with the requirements for a large foundry no later than 2 years after the date of your foundry's notification that the annual metal melt production exceeded 20,000 tons.

(ii) If your small foundry had previously been classified as a large foundry, you must comply with the requirements for a large foundry no later than the date of your foundry's most recent notification that the annual metal melt production exceeded 20,000 tons.

(2) If your facility is initially classified as a large foundry (or your small foundry subsequently becomes a large foundry), you must comply with the requirements for a large foundry for at least 3 years before reclassifying your facility as a small foundry, even if your annual metal melt production falls below 20,000 tons. After 3 years, you may reclassify your facility as a small foundry provided your annual metal melt production for the preceding calendar year was 20,000 tons or less. If you reclassify your large foundry as a small foundry, you must submit a notification of reclassification to the Administrator within 30 days and comply with the requirements for a small foundry no later than the date you notify the Administrator of the reclassification. If the annual metal melt production exceeds 20,000 tons during a subsequent year, you must submit a notification of reclassification to the Administrator within 30 days and comply with the requirements for a large foundry no later than the date you notify the Administrator of the reclassification.

(e) Following the initial determination for a new affected source required in §63.10880(g),

(1) If you increase the annual metal melt capacity of your small foundry to exceed 10,000 tons, you must submit a notification of reclassification to the Administrator within 30 days and comply with the requirements for a large foundry no later than the startup date for the new equipment, if applicable, or the date of issuance for your revised State or Federal operating permit.

(2) If your facility is initially classified as a large foundry (or your small foundry subsequently becomes a large foundry), you must comply with the requirements for a large foundry for at least 3 years before reclassifying your facility as a small foundry. After 3 years, you may reclassify your facility as a small foundry provided your most recent annual metal melt capacity is 10,000 tons or less. If you reclassify your large foundry as a small foundry, you must notify the Administrator within 30 days and comply with the requirements for a small foundry no later than the date your melting equipment was removed or taken out of service, if applicable, or the date of issuance for your revised State or Federal operating permit.

POLLUTION PREVENTION MANAGEMENT PRACTICES FOR NEW AND EXISTING AFFECTED SOURCES

### §63.10885 What are my management practices for metallic scrap and mercury switches?

(a) *Metallic scrap management program.* For each segregated metallic scrap storage area, bin or pile, you must comply with the materials acquisition requirements in paragraph (a)(1) or (2) of this section. You must keep a copy of the material specifications onsite and readily available to all personnel with material acquisition duties, and provide a copy to each of your scrap providers. You may have certain scrap subject to paragraph (a)(1) of this section and other scrap subject to paragraph (a)(2) of this section at your facility provided the metallic scrap remains segregated until charge makeup.

(1) *Restricted metallic scrap.* You must prepare and operate at all times according to written material specifications for the purchase and use of only metal ingots, pig iron, slitter, or other

materials that do not include post-consumer automotive body scrap, post-consumer engine blocks, post-consumer oil filters, oily turnings, lead components, chlorinated plastics, or free liquids. For the purpose of this subpart, ''free liquids'' is defined as material that fails the paint filter test by EPA Method 9095B, ''Paint Filter Liquids Test'' (revision 2), November 2004 (incorporated by reference—see § 63.14). The requirements for no free liquids do not apply if the owner or operator can demonstrate that the free liquid is water that resulted from scrap exposure to rain. Any post-consumer engine blocks, post-consumer oil filters, or oily turnings that are processed and/or cleaned to the extent practicable such that the materials do not include lead components, mercury switches, chlorinated plastics, or free organic liquids can be included in this certification.

(2) *General iron and steel scrap.* You must prepare and operate at all times according to written material specifications for the purchase and use of only iron and steel scrap that has been depleted (to the extent practicable) of organics and HAP metals in the charge materials used by the iron and steel foundry. The materials specifications must include at minimum the information specified in paragraph (a)(2)(i) or (ii) of this section.

(i) Except as provided in paragraph (a)(2)(ii) of this section, specifications for metallic scrap materials charged to a scrap preheater or metal melting furnace to be depleted (to the extent practicable) of the presence of used oil filters, chlorinated plastic parts, accessible lead-containing components (such as batteries and wheel weights), and a program to ensure the scrap materials are drained of free liquids.

(ii) For scrap charged to a cupola metal melting furnace that is equipped with an afterburner, specifications for metallic scrap materials to be depleted (to the extent practicable) of the presence of chlorinated plastics, accessible lead-containing components (such as batteries and wheel weights), and a program to ensure the scrap materials are drained of free liquids.

(b) *Mercury requirements.* For scrap containing motor vehicle scrap, you must procure the scrap pursuant to one of the compliance options in paragraphs (b)(1), (2), or (3) of this section for each scrap provider, contract, or shipment. For scrap that does not contain motor vehicle scrap, you must procure the scrap pursuant to the requirements in paragraph (b)(4) of this section for each scrap provider, contract, or shipment. You may have one scrap provider, contract, or shipment subject to one compliance provision and others subject to another compliance provision.

(1) *Site-specific plan for mercury switches.* You must comply with the requirements in paragraphs (b)(1)(i) through (v) of this section.

(i) You must include a requirement in your scrap specifications for removal of mercury switches from vehicle bodies used to make the scrap.

(ii) You must prepare and operate according to a plan demonstrating how your facility will implement the scrap specification in paragraph (b)(1)(i) of this section for removal of mercury switches. You must submit the plan to the Administrator for approval. You must operate according to the plan as submitted during the review and approval process, operate according to the approved plan at all times after approval, and address any deficiency identified by the Administrator or delegated authority within 60 days following disapproval of a plan. You may request approval to revise the plan and may operate according to the revised plan unless and until the revision is disapproved by the Administrator or delegated authority. The Administrator or delegated authority may change the approval status of the plan upon 90-days written notice based upon the semiannual report or other information. The plan must include:

(A) A means of communicating to scrap purchasers and scrap providers the need to obtain or provide motor vehicle scrap from which mercury switches have been removed and the need to ensure the proper management of the mercury switches removed from the scrap as required under the rules implementing subtitle C of the Resource Conservation and Recovery Act (RCRA) (40 CFR parts 261 through 265

and 268). The plan must include documentation of direction to appropriate staff to communicate to suppliers throughout the scrap supply chain the need to promote the removal of mercury switches from end-of-life vehicles. Upon the request of the Administrator or delegated authority, you must provide examples of materials that are used for outreach to suppliers, such as letters, contract language, policies for purchasing agents, and scrap inspection protocols;

(B) Provisions for obtaining assurance from scrap providers motor vehicle scrap provided to the facility meet the scrap specification;

(C) Provisions for periodic inspections or other means of corroboration to ensure that scrap providers and dismantlers are implementing appropriate steps to minimize the presence of mercury switches in motor vehicle scrap and that the mercury switches removed are being properly managed, including the minimum frequency such means of corroboration will be implemented; and

(D) Provisions for taking corrective actions (i.e., actions resulting in scrap providers removing a higher percentage of mercury switches or other mercury-containing components) if needed, based on the results of procedures implemented in paragraph (b)(1)(ii)(C) of this section).

(iii) You must require each motor vehicle scrap provider to provide an estimate of the number of mercury switches removed from motor vehicle scrap sent to the facility during the previous year and the basis for the estimate. The Administrator may request documentation or additional information at any time.

(iv) You must establish a goal for each scrap supplier to remove at least 80 percent of the mercury switches. Although a site-specific plan approved under paragraph (b)(1) of this section may require only the removal of convenience light switch mechanisms, the Administrator will credit all documented and verifiable mercury-containing components removed from motor vehicle scrap (such as sensors in anti-locking brake systems, security systems, active ride control, and other applications) when evaluating progress towards the 80 percent goal.

(v) For each scrap provider, you must submit semiannual progress reports to the Administrator that provide the number of mercury switches removed or the weight of mercury recovered from the switches, the estimated number of vehicles processed, an estimate of the percent of mercury switches removed, and certification that the removed mercury switches were recycled at RCRA-permitted facilities or otherwise properly managed pursuant to RCRA subtitle C regulations referenced in paragraph (b)(1)(ii)(A) of this section. This information can be submitted in aggregate form and does not have to be submitted for each shipment. The Administrator may change the approval status of a site-specific plan following 90-days notice based on the progress reports or other information.

(2) *Option for approved mercury programs.* You must certify in your notification of compliance status that you participate in and purchase motor vehicle scrap only from scrap providers who participate in a program for removal of mercury switches that has been approved by the Administrator based on the criteria in paragraphs (b)(2)(i) through (iii) of this section. If you purchase motor vehicle scrap from a broker, you must certify that all scrap received from that broker was obtained from other scrap providers who participate in a program for the removal of mercury switches that has been approved by the Administrator based on the criteria in paragraphs (b)(2)(i) through (iii) of this section. The National Mercury Switch Recovery Program and the State of Maine Mercury Switch Removal Program are EPA-approved programs under paragraph (b)(2) of this section unless and until the Administrator disapproves the program (in part or in whole) under paragraph (b)(2)(iii) of this section.

(i) The program includes outreach that informs the dismantlers of the need for removal of mercury switches and provides training and guidance for removing mercury switches;

(ii) The program has a goal to remove at least 80 percent of mercury switches

from motor vehicle scrap the scrap provider processes. Although a program approved under paragraph (b)(2) of this section may require only the removal of convenience light switch mechanisms, the Administrator will credit all documented and verifiable mercury-containing components removed from motor vehicle scrap (such as sensors in anti-locking brake systems, security systems, active ride control, and other applications) when evaluating progress towards the 80 percent goal; and

(iii) The program sponsor agrees to submit progress reports to the Administrator no less frequently than once every year that provide the number of mercury switches removed or the weight of mercury recovered from the switches, the estimated number of vehicles processed, an estimate of the percent of mercury switches recovered, and certification that the recovered mercury switches were recycled at facilities with permits as required under the rules implementing subtitle C of RCRA (40 CFR parts 261 through 265 and 268). The progress reports must be based on a database that includes data for each program participant; however, data may be aggregated at the State level for progress reports that will be publicly available. The Administrator may change the approval status of a program or portion of a program (e.g., at the State level) following 90-days notice based on the progress reports or on other information.

(iv) You must develop and maintain onsite a plan demonstrating the manner through which your facility is participating in the EPA-approved program.

(A) The plan must include facility-specific implementation elements, corporate-wide policies, and/or efforts coordinated by a trade association as appropriate for each facility.

(B) You must provide in the plan documentation of direction to appropriate staff to communicate to suppliers throughout the scrap supply chain the need to promote the removal or mercury switches from end-of-life vehicles. Upon the request of the Administrator or delegated authority, you must provide examples of materials that are used for outreach to suppliers, such as letters, contract language, policies for purchasing agents, and scrap inspection protocols.

(C) You must conduct periodic inspections or other means of corroboration to ensure that scrap providers are aware of the need for and are implementing appropriate steps to minimize the presence of mercury in scrap from end-of-life vehicles.

(3) *Option for specialty metal scrap.* You must certify in your notification of compliance status and maintain records of documentation that the only materials from motor vehicles in the scrap are materials recovered for their specialty alloy (including, but not limited to, chromium, nickel, molybdenum, or other alloys) content (such as certain exhaust systems) and, based on the nature of the scrap and purchase specifications, that the type of scrap is not reasonably expected to contain mercury switches.

(4) *Scrap that does not contain motor vehicle scrap.* For scrap not subject to the requirements in paragraphs (b)(1) through (3) of this section, you must certify in your notification of compliance status and maintain records of documentation that this scrap does not contain motor vehicle scrap.

[73 FR 252, Jan. 2, 2008, as amended at 85 FR 56101, Sept. 10, 2020]

### § 63.10886 What are my management practices for binder formulations?

For each furfuryl alcohol warm box mold or core making line at a new or existing iron and steel foundry, you must use a binder chemical formulation that does not use methanol as a specific ingredient of the catalyst formulation. This requirement does not apply to the resin portion of the binder system.

REQUIREMENTS FOR NEW AND EXISTING AFFECTED SOURCES CLASSIFIED AS SMALL FOUNDRIES

### § 63.10890 What are my management practices and compliance requirements?

(a) You must comply with the pollution prevention management practices for metallic scrap and mercury switches in § 63.10885 and binder formulations in § 63.10886.

(b) You must submit an initial notification of applicability according to §63.9(b)(2).

(c) You must submit a notification of compliance status according to §63.9(h)(2)(i). You must send the notification of compliance status before the close of business on the 30th day after the applicable compliance date specified in §63.10881. The notification must include the following compliance certifications, as applicable:

(1) ''This facility has prepared, and will operate by, written material specifications for metallic scrap according to §63.10885(a)(1)'' and/or ''This facility has prepared, and will operate by, written material specifications for general iron and steel scrap according to §63.10885(a)(2).''

(2) ''This facility has prepared, and will operate by, written material specifications for the removal of mercury switches and a site-specific plan implementing the material specifications according to §63.10885(b)(1) and/or ''This facility participates in and purchases motor vehicle scrap only from scrap providers who participate in a program for removal of mercury switches that has been approved by the Administrator according to §63.10885(b)(2) and has prepared a plan for participation in the EPA-approved program according to §63.10885(b)(2)(iv)'' and/or ''The only materials from motor vehicles in the scrap charged to a metal melting furnace at this facility are materials recovered for their specialty alloy content in accordance with §63.10885(b)(3) which are not reasonably expected to contain mercury switches'' and/or ''This facility complies with the requirements for scrap that does not contain motor vehicle scrap in accordance with §63.10885(b)(4).''

(3) ''This facility complies with the no methanol requirement for the catalyst portion of each binder chemical formulation for a furfuryl alcohol warm box mold or core making line according to §63.10886.''

(d) As required by §63.10(b)(1), you must maintain files of all information (including all reports and notifications) for at least 5 years following the date of each occurrence, measurement, maintenance, corrective action, report, or record. At a minimum, the most recent 2 years of data shall be retained on site. The remaining 3 years of data may be retained off site. Such files may be maintained on microfilm, on a computer, on computer floppy disks, on magnetic tape disks, or on microfiche. Any records required to be maintained by this part that are submitted electronically via the EPA's Compliance and Emissions Data Reporting Interface (CEDRI) may be maintained in electronic format. This ability to maintain electronic copies does not affect the requirement for facilities to make records, data, and reports available upon request to a delegated air agency or the EPA as part of an on-site compliance evaluation.

(e) You must maintain records of the information specified in paragraphs (e)(1) through (7) of this section according to the requirements in §63.10(b)(1).

(1) Records supporting your initial notification of applicability and your notification of compliance status according to §63.10(b)(2)(xiv).

(2) Records of your written materials specifications according to §63.10885(a) and records that demonstrate compliance with the requirements for restricted metallic scrap in §63.10885(a)(1) and/or for the use of general scrap in §63.10885(a)(2) and for mercury in §63.10885(b)(1) through (3), as applicable. You must keep records documenting compliance with §63.10885(b)(4) for scrap that does not contain motor vehicle scrap.

(3) If you are subject to the requirements for a site-specific plan for mercury switch removal under §63.10885(b)(1), you must maintain records of the number of mercury switches removed or the weight of mercury recovered from the switches and properly managed, the estimated number of vehicles processed, and an estimate of the percent of mercury switches recovered.

(4) If you are subject to the option for approved mercury programs under §63.10885(b)(2), you must maintain records identifying each scrap provider and documenting the scrap provider's participation in an approved mercury switch removal program. If you purchase motor vehicle scrap from a broker, you must maintain records

identifying each broker and documentation that all scrap provided by the broker was obtained from other scrap providers who participate in an approved mercury switch removal program.

(5) Records to document use of binder chemical formulation that does not contain methanol as a specific ingredient of the catalyst formulation for each furfuryl alcohol warm box mold or core making line as required by § 63.10886. These records must be the Material Safety Data Sheet (provided that it contains appropriate information), a certified product data sheet, or a manufacturer's hazardous air pollutant data sheet.

(6) Records of the annual quantity and composition of each HAP-containing chemical binder or coating material used to make molds and cores. These records must be copies of purchasing records, Material Safety Data Sheets, or other documentation that provides information on the binder or coating materials used.

(7) Records of metal melt production for each calendar year.

(f) You must submit semiannual compliance reports to the Administrator according to the requirements in § 63.10899(c), (f), and (g), except that § 63.10899(c)(5) and (7) do not apply.

(g) You must submit a written notification to the Administrator of the initial classification of your facility as a small foundry as required in § 63.10880(f) and (g), as applicable, and for any subsequent reclassification as required in § 63.10881(d)(1) or (e), as applicable.

(h) Following the initial determination for an existing affected source as a small foundry, if the annual metal melt production exceeds 20,000 tons during the preceding year, you must comply with the requirements for large foundries by the applicable dates in § 63.10881(d)(1)(i) or (d)(1)(ii). Following the initial determination for a new affected source as a small foundry, if you increase the annual metal melt capacity to exceed 10,000 tons, you must comply with the requirements for a large foundry by the applicable dates in § 63.10881(e)(1).

(i) At all times, you must operate and maintain any affected source, including associated air pollution control equipment and monitoring equipment, in a manner consistent with safety and good air pollution control practices for minimizing emissions.

(j) You must comply with the following requirements of the general provisions in subpart A of this part: §§ 63.1 through 63.5; § 63.6(a), (b), and (c); § 63.9; § 63.10(a), (b)(1), (b)(2)(xiv), (b)(3), (d)(1) and (4), and (f); and §§ 63.13 through 63.16. Requirements of the general provisions not cited in the preceding sentence do not apply to the owner or operator of a new or existing affected source that is classified as a small foundry.

[73 FR 252, Jan. 2, 2008, as amended at 85 FR 56101, Sept. 10, 2020]

REQUIREMENTS FOR NEW AND EXISTING AFFECTED SOURCES CLASSIFIED AS LARGE IRON AND STEEL FOUNDRIES

### § 63.10895 What are my standards and management practices?

(a) If you own or operate an affected source that is a large foundry as defined in § 63.10906, you must comply with the pollution prevention management practices in §§ 63.10885 and 63.10886, the requirements in paragraphs (b) through (e) of this section, and the requirements in §§ 63.10896 through 63.10900.

(b) You must operate a capture and collection system for each metal melting furnace at a new or existing iron and steel foundry unless that furnace is specifically uncontrolled as part of an emissions averaging group. Each capture and collection system must meet accepted engineering standards, such as those published by the American Conference of Governmental Industrial Hygienists.

(c) You must not discharge to the atmosphere emissions from any metal melting furnace or group of all metal melting furnaces that exceed the applicable limit in paragraph (c)(1) or (2) of this section. When an alternative emissions limit is provided for a given emissions source, you are not restricted in the selection of which applicable alternative emissions limit is used to demonstrate compliance.

(1) For an existing iron and steel foundry, 0.8 pounds of particulate matter (PM) per ton of metal charged or

0.06 pounds of total metal HAP per ton of metal charged.

(2) For a new iron and steel foundry, 0.1 pounds of PM per ton of metal charged or 0.008 pounds of total metal HAP per ton of metal charged.

(d) If you own or operate a new affected source, you must comply with each control device parameter operating limit in paragraphs (d)(1) and (2) of this section that applies to you.

(1) For each wet scrubber applied to emissions from a metal melting furnace, you must maintain the 3-hour average pressure drop and scrubber water flow rate at or above the minimum levels established during the initial or subsequent performance test.

(2) For each electrostatic precipitator applied to emissions from a metal melting furnace, you must maintain the voltage and secondary current (or total power input) to the control device at or above the level established during the initial or subsequent performance test.

(e) If you own or operate a new or existing iron and steel foundry, you must not discharge to the atmosphere fugitive emissions from foundry operations that exhibit opacity greater than 20 percent (6-minute average), except for one 6-minute average per hour that does not exceed 30 percent.

### §63.10896 What are my operation and maintenance requirements?

(a) You must prepare and operate at all times according to a written operation and maintenance (O&M) plan for each control device for an emissions source subject to a PM, metal HAP, or opacity emissions limit in §63.10895. You must maintain a copy of the O&M plan at the facility and make it available for review upon request. At a minimum, each plan must contain the following information:

(1) General facility and contact information;

(2) Positions responsible for inspecting, maintaining, and repairing emissions control devices which are used to comply with this subpart;

(3) Description of items, equipment, and conditions that will be inspected, including an inspection schedule for the items, equipment, and conditions. For baghouses that are equipped with bag leak detection systems, the O&M plan must include the site-specific monitoring plan required in §63.10897(d)(2).

(4) Identity and estimated quantity of the replacement parts that will be maintained in inventory; and

(5) For a new affected source, procedures for operating and maintaining a CPMS in accordance with manufacturer's specifications.

(b) You may use any other O&M, preventative maintenance, or similar plan which addresses the requirements in paragraph (a)(1) through (5) of this section to demonstrate compliance with the requirements for an O&M plan.

(c) At all times, you must operate and maintain any affected source, including associated air pollution control equipment and monitoring equipment, in a manner consistent with safety and good air pollution control practices for minimizing emissions.

[73 FR 252, Jan. 2, 2008, as amended at 85 FR 56101, Sept. 10, 2020]

### §63.10897 What are my monitoring requirements?

(a) You must conduct an initial inspection of each PM control device for a metal melting furnace at an existing affected source. You must conduct each initial inspection no later than 60 days after your applicable compliance date for each installed control device which has been operated within 60 days of the compliance date. For an installed control device which has not operated within 60 days of the compliance date, you must conduct an initial inspection prior to startup of the control device. Following the initial inspections, you must perform periodic inspections and maintenance of each PM control device for a metal melting furnace at an existing affected source. You must perform the initial and periodic inspections according to the requirements in paragraphs (a)(1) through (4) of this section. You must record the results of each initial and periodic inspection and any maintenance action in the logbook required in §63.10899(b)(13).

(1) For the initial inspection of each baghouse, you must visually inspect the system ductwork and baghouse units for leaks. You must also inspect

the inside of each baghouse for structural integrity and fabric filter condition. Following the initial inspections, you must inspect and maintain each baghouse according to the requirements in paragraphs (a)(1)(i) and (ii) of this section.

(i) You must conduct monthly visual inspections of the system ductwork for leaks.

(ii) You must conduct inspections of the interior of the baghouse for structural integrity and to determine the condition of the fabric filter every 6 months.

(2) For the initial inspection of each dry electrostatic precipitator, you must verify the proper functioning of the electronic controls for corona power and rapper operation, that the corona wires are energized, and that adequate air pressure is present on the rapper manifold. You must also visually inspect the system ductwork and electrostatic housing unit and hopper for leaks and inspect the interior of the electrostatic precipitator to determine the condition and integrity of corona wires, collection plates, hopper, and air diffuser plates. Following the initial inspection, you must inspect and maintain each dry electrostatic precipitator according to the requirements in paragraphs (a)(2)(i) through (iii) of this section.

(i) You must conduct a daily inspection to verify the proper functioning of the electronic controls for corona power and rapper operation, that the corona wires are energized, and that adequate air pressure is present on the rapper manifold.

(ii) You must conduct monthly visual inspections of the system ductwork, housing unit, and hopper for leaks.

(iii) You must conduct inspections of the interior of the electrostatic precipitator to determine the condition and integrity of corona wires, collection plates, plate rappers, hopper, and air diffuser plates every 24 months.

(3) For the initial inspection of each wet electrostatic precipitator, you must verify the proper functioning of the electronic controls for corona power, that the corona wires are energized, and that water flow is present. You must also visually inspect the system ductwork and electrostatic precipitator housing unit and hopper for leaks and inspect the interior of the electrostatic precipitator to determine the condition and integrity of corona wires, collection plates, plate wash spray heads, hopper, and air diffuser plates. Following the initial inspection, you must inspect and maintain each wet electrostatic precipitator according to the requirements in paragraphs (a)(3)(i) through (iii) of this section.

(i) You must conduct a daily inspection to verify the proper functioning of the electronic controls for corona power, that the corona wires are energized, and that water flow is present.

(ii) You must conduct monthly visual inspections of the system ductwork, electrostatic precipitator housing unit, and hopper for leaks.

(iii) You must conduct inspections of the interior of the electrostatic precipitator to determine the condition and integrity of corona wires, collection plates, plate wash spray heads, hopper, and air diffuser plates every 24 months.

(4) For the initial inspection of each wet scrubber, you must verify the presence of water flow to the scrubber. You must also visually inspect the system ductwork and scrubber unit for leaks and inspect the interior of the scrubber for structural integrity and the condition of the demister and spray nozzle. Following the initial inspection, you must inspect and maintain each wet scrubber according to the requirements in paragraphs (a)(4)(i) through (iii) of this section.

(i) You must conduct a daily inspection to verify the presence of water flow to the scrubber.

(ii) You must conduct monthly visual inspections of the system ductwork and scrubber unit for leaks.

(iii) You must conduct inspections of the interior of the scrubber to determine the structural integrity and condition of the demister and spray nozzle every 12 months.

(b) For each wet scrubber applied to emissions from a metal melting furnace at a new affected source, you must use a continuous parameter monitoring system (CPMS) to measure and record the 3-hour average pressure drop and scrubber water flow rate.

(c) For each electrostatic precipitator applied to emissions from a metal melting furnace at a new affected source, you must measure and record the hourly average voltage and secondary current (or total power input) using a CPMS.

(d) If you own or operate an existing affected source, you may install, operate, and maintain a bag leak detection system for each negative pressure baghouse or positive pressure baghouse as an alternative to the baghouse inspection requirements in paragraph (a)(1) of this section. If you own or operate a new affected source, you must install, operate, and maintain a bag leak detection system for each negative pressure baghouse or positive pressure baghouse. You must install, operate, and maintain each bag leak detection system according to the requirements in paragraphs (d)(1) through (3) of this section.

(1) Each bag leak detection system must meet the requirements in paragraphs (d)(1)(i) through (vii) of this section.

(i) The system must be certified by the manufacturer to be capable of detecting emissions of particulate matter at concentrations of 10 milligrams per actual cubic meter (0.0044 grains per actual cubic foot) or less.

(ii) The bag leak detection system sensor must provide output of relative particulate matter loadings and the owner or operator shall continuously record the output from the bag leak detection system using a strip chart recorder, data logger, or other means.

(iii) The system must be equipped with an alarm that will sound when an increase in relative particulate loadings is detected over the alarm set point established in the operation and maintenance plan, and the alarm must be located such that it can be heard by the appropriate plant personnel.

(iv) The initial adjustment of the system must, at minimum, consist of establishing the baseline output by adjusting the sensitivity (range) and the averaging period of the device, and establishing the alarm set points. If the system is equipped with an alarm delay time feature, you also must adjust the alarm delay time.

(v) Following the initial adjustment, do not adjust the sensitivity or range, averaging period, alarm set point, or alarm delay time. Except, once per quarter, you may adjust the sensitivity of the bag leak detection system to account for seasonable effects including temperature and humidity according to the procedures in the monitoring plan required by paragraph (d)(2) of this section.

(vi) For negative pressure baghouses, induced air baghouses, and positive pressure baghouses that are discharged to the atmosphere through a stack, the bag leak detector sensor must be installed downstream of the baghouse and upstream of any wet scrubber.

(vii) Where multiple detectors are required, the system's instrumentation and alarm may be shared among detectors.

(2) You must prepare a site-specific monitoring plan for each bag leak detection system to be incorporated in your O&M plan. You must operate and maintain each bag leak detection system according to the plan at all times. Each plan must address all of the items identified in paragraphs (d)(2)(i) through (vi) of this section.

(i) Installation of the bag leak detection system.

(ii) Initial and periodic adjustment of the bag leak detection system including how the alarm set-point will be established.

(iii) Operation of the bag leak detection system including quality assurance procedures.

(iv) Maintenance of the bag leak detection system including a routine maintenance schedule and spare parts inventory list.

(v) How the bag leak detection system output will be recorded and stored.

(vi) Procedures for determining what corrective actions are necessary in the event of a bag leak detection alarm as required in paragraph (d)(3) of this section.

(3) In the event that a bag leak detection system alarm is triggered, you must initiate corrective action to determine the cause of the alarm within 1 hour of the alarm, initiate corrective action to correct the cause of the problem within 24 hours of the alarm, and complete corrective action as soon as

practicable, but no later than 10 calendar days from the date of the alarm. You must record the date and time of each valid alarm, the time you initiated corrective action, the corrective action taken, and the date on which corrective action was completed. Corrective actions may include, but are not limited to:

(i) Inspecting the bag house for air leaks, torn or broken bags or filter media, or any other condition that may cause an increase in emissions.

(ii) Sealing off defective bags or filter media.

(iii) Replacing defective bags or filter media or otherwise repairing the control device.

(iv) Sealing off a defective baghouse department.

(v) Cleaning the bag leak detection system probe, or otherwise repairing the bag leak detection system.

(vi) Shutting down the process producing the particulate emissions.

(e) You must make monthly inspections of the equipment that is important to the performance of the total capture system (i.e., pressure sensors, dampers, and damper switches). This inspection must include observations of the physical appearance of the equipment (e.g., presence of holes in the ductwork or hoods, flow constrictions caused by dents or accumulated dust in the ductwork, and fan erosion). You must repair any defect or deficiency in the capture system as soon as practicable, but no later than 90 days. You must record the date and results of each inspection and the date of repair of any defect or deficiency.

(f) You must install, operate, and maintain each CPMS or other measurement device according to your O&M plan. You must record all information needed to document conformance with these requirements.

(g) In the event of an exceedance of an established emissions limitation (including an operating limit), you must restore operation of the emissions source (including the control device and associated capture system) to its normal or usual manner or operation as expeditiously as practicable in accordance with good air pollution control practices for minimizing emissions. The response shall include taking any necessary corrective actions to restore normal operation and prevent the likely recurrence of the exceedance. You must record the date and time corrective action was initiated, the corrective action taken, and the date corrective action was completed.

(h) If you choose to comply with an emissions limit in § 63.10895(c) using emissions averaging, you must calculate and record for each calendar month the pounds of PM or total metal HAP per ton of metal melted from the group of all metal melting furnaces at your foundry. You must calculate and record the weighted average pounds per ton emissions rate for the group of all metal melting furnaces at the foundry determined from the performance test procedures in § 63.10898(d) and (e).

[73 FR 252, Jan. 2, 2008, as amended at 85 FR 56102, Sept. 10, 2020]

### § 63.10898 What are my performance test requirements?

(a) You must conduct a performance test to demonstrate initial compliance with the applicable emissions limits for each metal melting furnace or group of all metal melting furnaces that is subject to an emissions limit in § 63.10895(c) and for each building or structure housing foundry operations that is subject to the opacity limit for fugitive emissions in § 63.10895(e). You must conduct the test within 180 days of your compliance date and report the results in your notification of compliance status.

(1) If you own or operate an existing iron and steel foundry, you may choose to submit the results of a prior performance test for PM or total metal HAP that demonstrates compliance with the applicable emissions limit for a metal melting furnace or group of all metal melting furnaces provided the test was conducted within the last 5 years using the methods and procedures specified in this subpart and either no process changes have been made since the test, or you can demonstrate that the results of the performance test, with or without adjustments, reliably demonstrate compliance with the applicable emissions limit despite such process changes.

(2) If you own or operate an existing iron and steel foundry and you choose

to submit the results of a prior performance test according to paragraph (a)(1) of this section, you must submit a written notification to the Administrator of your intent to use the previous test data no later than 60 days after your compliance date. The notification must contain a full copy of the performance test and contain information to demonstrate, if applicable, that either no process changes have been made since the test, or that the results of the performance test, with or without adjustments, reliably demonstrate compliance despite such process changes.

(3) If you have an electric induction furnace equipped with an emissions control device at an existing foundry, you may use the test results from another electric induction furnace to demonstrate compliance with the applicable PM or total metal HAP emissions limit in §63.10895(c) provided the furnaces are similar with respect to the type of emission control device that is used, the composition of the scrap charged, furnace size, and furnace melting temperature.

(4) If you have an uncontrolled electric induction furnace at an existing foundry, you may use the test results from another electric induction furnace to demonstrate compliance with the applicable PM or total metal HAP emissions limit in §63.10895(c) provided the test results are prior to any control device and the electric induction furnaces are similar with respect to the composition of the scrap charged, furnace size, and furnace melting temperature.

(5) For electric induction furnaces that do not have emission capture systems, you may install a temporary enclosure for the purpose of representative sampling of emissions. A permanent enclosure and capture system is not required for the purpose of the performance test.

(b) You must conduct subsequent performance tests to demonstrate compliance with all applicable PM or total metal HAP emissions limits in §63.10895(c) for a metal melting furnace or group of all metal melting furnaces no less frequently than every 5 years and each time you elect to change an operating limit or make a process change likely to increase HAP emissions.

(c) You must conduct each performance test under conditions representative of normal operations according to the requirements in Table 1 to this subpart and paragraphs (d) through (g) of this section. Normal operating conditions exclude periods of startup and shutdown. You may not conduct performance tests during periods of malfunction. You must record the process information that is necessary to document operating conditions during the test and include in such record an explanation to support that such conditions represent normal operation. Upon request, you shall make available to the Administrator such records as may be necessary to determine the conditions of performance tests.

(d) To determine compliance with the applicable PM or total metal HAP emissions limit in §63.10895(c) for a metal melting furnace in a lb/ton of metal charged format, compute the process-weighted mass emissions ($E^p$) for each test run using Equation 1 of this section:

$$E_p = \frac{C \times Q \times T}{P \times K} \qquad \text{(Eq. 1)}$$

Where:

$E_p$ = Process-weighted mass emissions rate of PM or total metal HAP, pounds of PM or total metal HAP per ton (lb/ton) of metal charged;

C = Concentration of PM or total metal HAP measured during performance test run, grains per dry standard cubic foot (gr/dscf);

Q = Volumetric flow rate of exhaust gas, dry standard cubic feet per hour (dscf/hr);

T = Total time during a test run that a sample is withdrawn from the stack during melt production cycle, hr;

P = Total amount of metal charged during the test run, tons; and

K = Conversion factor, 7,000 grains per pound.

(e) To determine compliance with the applicable emissions limit in §63.10895(c) for a group of all metal melting furnaces using emissions averaging,

(1) Determine and record the monthly average charge rate for each metal melting furnace at your iron and steel foundry for the previous calendar month; and

(2) Compute the mass-weighted PM or total metal HAP using Equation 2 of this section.

$$E_c = \frac{\sum_{i=1}^{n}\left(E_{pi} \times T_{ti}\right)}{\sum_{i=1}^{n} T_{ti}} \qquad \text{(Eq. 2)}$$

Where:

$E_C$ = The mass-weighted PM or total metal HAP emissions for the group of all metal melting furnaces at the foundry, pounds of PM or total metal HAP per ton of metal charged;

$E_{pi}$ = Process-weighted mass emissions of PM or total metal HAP for individual emission unit i as determined from the performance test and calculated using Equation 1 of this section, pounds of PM or total metal HAP per ton of metal charged;

$T_{ti}$ = Total tons of metal charged for individual emission unit i for the calendar month prior to the performance test, tons; and

n = The total number of metal melting furnaces at the iron and steel foundry.

(3) For an uncontrolled electric induction furnace that is not equipped with a capture system and has not been previously tested for PM or total metal HAP, you may assume an emissions factor of 2 pounds per ton of PM or 0.13 pounds of total metal HAP per ton of metal melted in Equation 2 of this section instead of a measured test value. If the uncontrolled electric induction furnace is equipped with a capture system, you must use a measured test value.

(f) To determine compliance with the applicable PM or total metal HAP emissions limit for a metal melting furnace in § 63.10895(c) when emissions from one or more regulated furnaces are combined with other non-regulated emissions sources, you may demonstrate compliance using the procedures in paragraphs (f)(1) through (3) of this section.

(1) Determine the PM or total metal HAP process-weighted mass emissions for each of the regulated streams prior to the combination with other exhaust streams or control device.

(2) Measure the flow rate and PM or total metal HAP concentration of the combined exhaust stream both before and after the control device and calculate the mass removal efficiency of the control device using Equation 3 of this section.

$$\%\ \text{reduction} = \frac{E_i - E_o}{E_i} \times 100\% \qquad \text{(Eq. 3)}$$

Where:

$E_i$ = Mass emissions rate of PM or total metal HAP at the control device inlet, lb/hr;

$E_o$ = Mass emissions rate of PM or total metal HAP at the control device outlet, lb/hr.

(3) Meet the applicable emissions limit based on the calculated PM or total metal HAP process-weighted mass emissions for the regulated emissions source using Equation 4 of this section:

$$E_{p1_{released}} E_{p1_i} \times \left(1 - \frac{\%\ \text{reduction}}{100}\right) \qquad \text{(Eq. 4)}$$

Where:

$E_{p1released}$ = Calculated process-weighted mass emissions of PM (or total metal HAP) predicted to be released to the atmosphere from the regulated emissions source, pounds of PM or total metal HAP per ton of metal charged; and

$E_{p1i}$ = Process-weighted mass emissions of PM (or total metal HAP) in the uncontrolled regulated exhaust stream, pounds

of PM or total metal HAP per ton of metal charged.

(g) To determine compliance with an emissions limit for situations when multiple sources are controlled by a single control device, but only one source operates at a time or other situations that are not expressly considered in paragraphs (d) through (f) of this section, you must submit a site-specific test plan to the Administrator for approval according to the requirements in §63.7(c)(2) and (3).

(h) You must conduct each opacity test for fugitive emissions according to the requirements in §63.6(h)(5) and Table 1 to this subpart.

(i) You must conduct subsequent performance tests to demonstrate compliance with the opacity limit in §63.10895(e) no less frequently than every 6 months and each time you make a process change likely to increase fugitive emissions.

(j) In your performance test report, you must certify that the capture system operated normally during the performance test.

(k) You must establish operating limits for a new affected source during the initial performance test according to the requirements in Table 2 of this subpart.

(l) You may change the operating limits for a wet scrubber, electrostatic precipitator, or baghouse if you meet the requirements in paragraphs (l)(1) through (3) of this section.

(1) Submit a written notification to the Administrator of your plan to conduct a new performance test to revise the operating limit.

(2) Conduct a performance test to demonstrate compliance with the applicable emissions limitation in §63.10895(c).

(3) Establish revised operating limits according to the applicable procedures in Table 2 to this subpart.

[73 FR 252, Jan. 2, 2008, as amended at 85 FR 56102, Sept. 10, 2020]

### §63.10899 What are my recordkeeping and reporting requirements?

(a) As required by §63.10(b)(1), you must maintain files of all information (including all reports and notifications) for at least 5 years following the date of each occurrence, measurement, maintenance, corrective action, report, or record. At a minimum, the most recent 2 years of data shall be retained on site. The remaining 3 years of data may be retained off site. Such files may be maintained on microfilm, on a computer, on computer floppy disks or flash drives, on magnetic tape disks, or on microfiche. Any records required to be maintained by this part that are submitted electronically via the EPA's CEDRI may be maintained in electronic format. This ability to maintain electronic copies does not affect the requirement for facilities to make records, data, and reports available upon request to a delegated air agency or the EPA as part of an on-site compliance evaluation.

(b) In addition to the records required by §63.10(b)(2)(iii) and (vi) through (xiv) and (b)(3), you must keep records of the information specified in paragraphs (b)(1) through (15) of this section.

(1) You must keep records of your written materials specifications according to §63.10885(a) and records that demonstrate compliance with the requirements for restricted metallic scrap in §63.10885(a)(1) and/or for the use of general scrap in §63.10885(a)(2) and for mercury in §63.10885(b)(1) through (3), as applicable. You must keep records documenting compliance with §63.10885(b)(4) for scrap that does not contain motor vehicle scrap.

(2) If you are subject to the requirements for a site-specific plan for mercury under §63.10885(b)(1), you must maintain records of the number of mercury switches removed or the weight of mercury recovered from the switches and properly managed, the estimated number of vehicles processed, and an estimate of the percent of mercury switches recovered.

(3) If you are subject to the option for approved mercury programs under §63.10885(b)(2), you must maintain records identifying each scrap provider and documenting the scrap provider's participation in an approved mercury switch removal program. If your scrap provider is a broker, you must maintain records identifying each of the

broker's scrap suppliers and documenting the scrap supplier's participation in an approved mercury switch removal program.

(4) You must keep records to document use of any binder chemical formulation that does not contain methanol as a specific ingredient of the catalyst formulation for each furfuryl alcohol warm box mold or core making line as required by § 63.10886. These records must be the Material Safety Data Sheet (provided that it contains appropriate information), a certified product data sheet, or a manufacturer's hazardous air pollutant data sheet.

(5) You must keep records of the annual quantity and composition of each HAP-containing chemical binder or coating material used to make molds and cores. These records must be copies of purchasing records, Material Safety Data Sheets, or other documentation that provide information on the binder or coating materials used.

(6) You must keep records of monthly metal melt production for each calendar year.

(7) You must keep a copy of the operation and maintenance plan as required by § 63.10896(a) and records that demonstrate compliance with plan requirements.

(8) If you use emissions averaging, you must keep records of the monthly metal melting rate for each furnace at your iron and steel foundry, and records of the calculated pounds of PM or total metal HAP per ton of metal melted for the group of all metal melting furnaces required by § 63.10897(h).

(9) If applicable, you must keep records for bag leak detection systems as follows:

(i) Records of the bag leak detection system output;

(ii) Records of bag leak detection system adjustments, including the date and time of the adjustment, the initial bag leak detection system settings, and the final bag leak detection system settings; and

(iii) The date and time of all bag leak detection system alarms, and for each valid alarm, the time you initiated corrective action, the corrective action taken, and the date on which corrective action was completed.

(10) You must keep records of capture system inspections and repairs as required by § 63.10897(e).

(11) You must keep records demonstrating conformance with your specifications for the operation of CPMS as required by § 63.10897(f).

(12) You must keep records of corrective action(s) for exceedances and excursions as required by § 63.10897(g).

(13) You must record the results of each inspection and maintenance required by § 63.10897(a) for PM control devices in a logbook (written or electronic format). You must keep the logbook onsite and make the logbook available to the Administrator upon request. You must keep records of the information specified in paragraphs (b)(13)(i) through (iii) of this section.

(i) The date and time of each recorded action for a fabric filter, the results of each inspection, and the results of any maintenance performed on the bag filters.

(ii) The date and time of each recorded action for a wet or dry electrostatic precipitator (including ductwork), the results of each inspection, and the results of any maintenance performed for the electrostatic precipitator.

(iii) The date and time of each recorded action for a wet scrubber (including ductwork), the results of each inspection, and the results of any maintenance performed on the wet scrubber.

(14) You must keep records of the site-specific performance evaluation test plan required under § 63.8(d)(2) for the life of the affected source or until the affected source is no longer subject to the provisions of this part, to be made available for inspection, upon request, by the Administrator. If the performance evaluation plan is revised, you shall keep previous (*i.e.*, superseded) versions of the performance evaluation plan on record to be made available for inspection, upon request, by the Administrator, for a period of 5 years after each revision to the plan. The program of corrective action should be included in the plan as required under § 63.8(d)(2)(vi).

(15) You must keep the following records for each failure to meet an

emissions limitation (including operating limit), work practice standard, or operation and maintenance requirement in this subpart.

(i) Date, start time, and duration of each failure.

(ii) List of the affected sources or equipment for each failure, an estimate of the quantity of each regulated pollutant emitted over any emission limit and a description of the method used to estimate the emissions.

(iii) Actions taken to minimize emissions in accordance with §63.10896(c), and any corrective actions taken to return the affected unit to its normal or usual manner of operation.

(c) Prior to March 9, 2021, you must submit semiannual compliance reports to the Administrator according to the requirements in §63.13. Beginning on March 9, 2021, you must submit all subsequent semiannual compliance reports to the EPA via the CEDRI, which can be accessed through the EPA's Central Data Exchange (CDX) (*https://cdx.epa.gov/*). The EPA will make all the information submitted through CEDRI available to the public without further notice to you. Do not use CEDRI to submit information you claim as confidential business information (CBI). Anything submitted using CEDRI cannot later be claimed to be CBI. You must use the appropriate electronic report template on the CEDRI website (*https://www.epa.gov/electronic-reporting-air-emissions/cedri*) for this subpart. The date report templates become available will be listed on the CEDRI website. The report must be submitted by the deadline specified in this subpart, regardless of the method in which the report is submitted. Although we do not expect persons to assert a claim of CBI, if persons wish to assert a CBI if you claim some of the information required to be submitted via CEDRI is CBI, submit a complete report, including information claimed to be CBI, to the EPA. The report must be generated using the appropriate form on the CEDRI website or an alternate electronic file consistent with the extensible markup language (XML) schema listed on the CEDRI website. Submit the file on a compact disc, flash drive, or other commonly used electronic storage medium and clearly mark the medium as CBI. Mail the electronic medium to U.S. EPA/OAQPS/CORE CBI Office, Attention: Group Leader, Measurement Policy Group, MD C404–02, 4930 Old Page Rd., Durham, NC 27703. The same file with the CBI omitted must be submitted to the EPA via the EPA's CDX as described earlier in this paragraph (c). All CBI claims must be asserted at the time of submission. Furthermore, under CAA section 114(c) emissions data is not entitled to confidential treatment and requires EPA to make emissions data available to the public. Thus, emissions data will not be protected as CBI and will be made publicly available. The reports must include the information specified in paragraphs (c)(1) through (3) of this section and, as applicable, paragraphs (c)(4) through (9) of this section.

(1) Company name and address.

(2) Statement by a responsible official, with that official's name, title, and signature, certifying the truth, accuracy, and completeness of the content of the report.

(3) Date of report and beginning and ending dates of the reporting period.

(4) If there were no deviations from any emissions limitations (including operating limits, pollution prevention management practices, or operation and maintenance requirements), a statement that there were no deviations from the emissions limitations, pollution prevention management practices, or operation and maintenance requirements during the reporting period.

(5) If there were no periods during which a continuous monitoring system (including a CPMS or continuous emissions monitoring system (CEMS) was inoperable or out-of-control as specified by §63.8(c)(7), a statement that there were no periods during which the CPMS was inoperable or out-of-control during the reporting period.

(6) For each affected source or equipment for which there was a deviation from an emissions limitation (including an operating limit, pollution prevention management practice, or operation and maintenance requirement) that occurs at an iron and steel foundry during the reporting period, the

compliance report must contain the information specified in paragraphs (c)(6)(i) through (iii) of this section. The requirement in this paragraph (c)(6) includes periods of startup, shutdown, and malfunction.

(i) A list of the affected source or equipment and the total operating time of each emissions source during the reporting period.

(ii) For each deviation from an emissions limitation (including an operating limit, pollution prevention management practice, or operation and maintenance requirement) that occurs at an iron and steel foundry during the reporting period, report:

(A) The date, start time, duration (in hours), and cause of each deviation (characterized as either startup, shutdown, control equipment problem, process problem, other known cause, or unknown cause, as applicable) and the corrective action taken; and

(B) An estimate of the quantity of each regulated pollutant emitted over any emission limit and a description of the method used to estimate the emissions.

(iii) A summary of the total duration (in hours) of the deviations that occurred during the reporting period by cause (characterized as startup, shutdown, control equipment problems, process problems, other known causes, and unknown causes) and the cumulative duration of deviations during the reporting period across all causes both in hours and as a percent of the total source operating time during the reporting period.

(7) For each continuous monitoring system (including a CPMS or CEMS) used to comply with the emissions limitation or work practice standard in this subpart that was inoperable or out-of-control during any portion of the reporting period, you must include the information specified in paragraphs (c)(7)(i) through (vi) of this section. The requirement in this paragraph (c)(7) includes periods of startup, shutdown, and malfunction.

(i) A brief description of the continuous monitoring system, including manufacturer and model number.

(ii) The date of the latest continuous monitoring system certification or audit.

(iii) A brief description and the total operating time of the affected source or equipment that is monitored by the continuous monitoring system during the reporting period.

(iv) A description of any changes in continuous monitoring systems, processes, or controls since the last reporting period.

(v) For each period for which the continuous monitoring system was inoperable or out-of-control during the reporting period, report:

(A) The date, start time, and duration (in hours) of the deviation;

(B) The type of deviation (inoperable or out-of-control); and

(C) The cause of deviation (characterized as monitoring system malfunctions, non-monitoring equipment malfunctions, quality assurance/quality control calibrations, other known causes, and unknown causes, as applicable) and the corrective action taken.

(vi) A summary of the total duration (in hours) of the deviations that occurred during the reporting period by cause (characterized as monitoring system malfunctions, non-monitoring equipment malfunctions, quality assurance/quality control calibrations, other known causes, and unknown causes) and the cumulative duration of deviations during the reporting period across all causes both in hours and as a percent of the total source operating time during the reporting period.

(8) Identification of which option in § 63.10885(b) applies to you. If you comply with the mercury requirements in § 63.10885(b) by using one scrap provider, contract, or shipment subject to one compliance provision and others subject to another compliance provision different, provide an identification of which option in § 63.10885(b) applies to each scrap provider, contract, or shipment.

(9) If you are subject to the requirements for a site-specific plan for mercury under § 63.10885(b)(1), include:

(i) The number of mercury switches removed or the weight of mercury recovered from the switches and properly managed, the estimated number of vehicles processed, an estimate of the percent of mercury switches recovered;

(ii) A certification that the recovered mercury switches were recycled at RCRA-permitted facilities; and

(iii) A certification that you have conducted periodic inspections or taken other means of corroboration as required under §63.10885(b)(1)(ii)(C).

(d) You must submit written notification to the Administrator of the initial classification of your new or existing affected source as a large iron and steel facility as required in §63.10880(f) and (g), as applicable, and for any subsequent reclassification as required in §63.10881(d) or (e), as applicable.

(e) Within 60 days after the date of completing each performance test required by this subpart, you must submit the results of the performance test following the procedures specified in paragraphs (e)(1) through (3) of this section.

(1) *Data collected using test methods supported by the EPA's Electronic Reporting Tool (ERT) as listed on the EPA's ERT website (https://www.epa.gov/electronic-reporting-air-emissions/electronic-reporting-tool-ert) at the time of the test.* Submit the results of the performance test to the EPA via the CEDRI, which can be accessed through the EPA's CDX (*https://cdx.epa.gov/*). The data must be submitted in a file format generated through the use of the EPA's ERT. Alternatively, you may submit an electronic file consistent with the XML schema listed on the EPA's ERT website.

(2) *Data collected using test methods that are not supported by the EPA's ERT as listed on the EPA's ERT website at the time of the test.* The results of the performance test must be included as an attachment in the ERT or an alternate electronic file consistent with the XML schema listed on the EPA's ERT website. Submit the ERT generated package or alternative file to the EPA via CEDRI.

(3) *Confidential business information.* The EPA will make all the information submitted through CEDRI available to the public without further notice to you. Do not use CEDRI to submit information you claim as CBI. Anything submitted using CEDRI cannot later be claimed to be CBI. Although we do not expect persons to assert a claim of CBI if you claim some of the information submitted under paragraph (e)(1) or (2) of this section is CBI, you must submit a complete file, including information claimed to be CBI, to the EPA. The file must be generated through the use of the EPA's ERT or an alternate electronic file consistent with the XML schema listed on the EPA's ERT website. Submit the file on a compact disc, flash drive, or other commonly used electronic storage medium and clearly mark the medium as CBI. Mail the electronic medium to U.S. EPA/OAQPS/CORE CBI Office, Attention: Group Leader, Measurement Policy Group, MD C404–02, 4930 Old Page Rd., Durham, NC 27703. The same file with the CBI omitted must be submitted to the EPA via the EPA's CDX as described in paragraph (e)(1) of this section. All CBI claims must be asserted at the time of submission. Furthermore, under CAA section 114(c) emissions data is not entitled to confidential treatment and requires EPA to make emissions data available to the public. Thus, emissions data will not be protected as CBI and will be made publicly available.

(f) If you are required to electronically submit a report through CEDRI in the EPA's CDX, you may assert a claim of EPA system outage for failure to timely comply with the reporting requirement. To assert a claim of EPA system outage, you must meet the requirements outlined in paragraphs (f)(1) through (7) of this section.

(1) You must have been or will be precluded from accessing CEDRI and submitting a required report within the time prescribed due to an outage of either the EPA's CEDRI or CDX systems.

(2) The outage must have occurred within the period of time beginning 5 business days prior to the date that the submission is due.

(3) The outage may be planned or unplanned.

(4) You must submit notification to the Administrator in writing as soon as possible following the date you first knew, or through due diligence should have known, that the event may cause or has caused a delay in reporting.

(5) You must provide to the Administrator a written description identifying:

(i) The date(s) and time(s) when CDX or CEDRI was accessed and the system was unavailable;

(ii) A rationale for attributing the delay in reporting beyond the regulatory deadline to EPA system outage;

(iii) Measures taken or to be taken to minimize the delay in reporting; and

(iv) The date by which you propose to report, or if you have already met the reporting requirement at the time of the notification, the date you reported.

(6) The decision to accept the claim of EPA system outage and allow an extension to the reporting deadline is solely within the discretion of the Administrator.

(7) In any circumstance, the report must be submitted electronically as soon as possible after the outage is resolved.

(g) If you are required to electronically submit a report through CEDRI in the EPA's CDX, you may assert a claim of force majeure for failure to timely comply with the reporting requirement. To assert a claim of force majeure, you must meet the requirements outlined in paragraphs (g)(1) through (5) of this section.

(1) You may submit a claim if a force majeure event is about to occur, occurs, or has occurred or there are lingering effects from such an event within the period of time beginning five business days prior to the date the submission is due. For the purposes of this section, a force majeure event is defined as an event that will be or has been caused by circumstances beyond the control of the affected facility, its contractors, or any entity controlled by the affected facility that prevents you from complying with the requirement to submit a report electronically within the time period prescribed. Examples of such events are acts of nature (*e.g.*, hurricanes, earthquakes, or floods), acts of war or terrorism, or equipment failure or safety hazard beyond the control of the affected facility (*e.g.*, large scale power outage).

(2) You must submit notification to the Administrator in writing as soon as possible following the date you first knew, or through due diligence should have known, that the event may cause or has caused a delay in reporting.

(3) You must provide to the Administrator:

(i) A written description of the force majeure event;

(ii) A rationale for attributing the delay in reporting beyond the regulatory deadline to the force majeure event;

(iii) Measures taken or to be taken to minimize the delay in reporting; and

(iv) The date by which you propose to report, or if you have already met the reporting requirement at the time of the notification, the date you reported.

[73 FR 252, Jan. 2, 2008, as amended at 85 FR 56102, Sept. 10, 2020]

### § 63.10900 What parts of the General Provisions apply to my large foundry?

(a) If you own or operate a new or existing affected source that is classified as a large foundry, you must comply with the requirements of the General Provisions (40 CFR part 63, subpart A) according to Table 3 of this subpart.

(b) If you own or operator a new or existing affected source that is classified as a large foundry, your notification of compliance status required by § 63.9(h) must include each applicable certification of compliance, signed by a responsible official, in Table 4 of this subpart.

## OTHER REQUIREMENTS AND INFORMATION

### § 63.10905 Who implements and enforces this subpart?

(a) This subpart can be implemented and enforced by EPA or a delegated authority such as your State, local, or tribal agency. If the EPA Administrator has delegated authority to your State, local, or tribal agency, then that agency has the authority to implement and enforce this subpart. You should contact your EPA Regional Office to find out if implementation and enforcement of this subpart is delegated to your State, local, or tribal agency.

(b) In delegating implementation and enforcement authority of this subpart to a State, local, or tribal agency under 40 CFR part 63, subpart E, the authorities contained in paragraph (c) of this section are retained by the EPA Administrator and are not transferred to the State, local, or tribal agency.

(c) The authorities that cannot be delegated to state, local, or tribal agencies are specified in paragraphs (c)(1) through (7) of this section.

(1) Approval of an alternative non-opacity emissions standard under 40 CFR 63.6(g).

(2) Approval of an alternative opacity emissions standard under § 63.6(h)(9).

(3) Approval of a major change to test methods under § 63.7(e)(2)(ii) and (f). A ''major change to test method'' is defined in § 63.90.

(4) Approval of a major change to monitoring under § 63.8(f). A ''major change to monitoring'' under is defined in § 63.90.

(5) Approval of a major change to recordkeeping and reporting under § 63.10(f). A ''major change to recordkeeping/reporting'' is defined in § 63.90.

(6) Approval of a local, State, or national mercury switch removal program under § 63.10885(b)(2).

(7) Approval of an alternative to any electronic reporting to the EPA required by this subpart.

[73 FR 252, Jan. 2, 2008, as amended at 85 FR 56104, Sept. 10, 2020]

### § 63.10906 What definitions apply to this subpart?

Terms used in this subpart are defined in the Clean Air Act, in § 63.2, and in this section.

*Annual metal melt capacity* means the lower of the total metal melting furnace equipment melt rate capacity assuming 8,760 operating hours per year summed for all metal melting furnaces at the foundry or, if applicable, the maximum permitted metal melt production rate for the iron and steel foundry calculated on an annual basis. Unless otherwise specified in the permit, permitted metal melt production rates that are not specified on an annual basis must be annualized assuming 24 hours per day, 365 days per year of operation. If the permit limits the operating hours of the furnace(s) or foundry, then the permitted operating hours are used to annualize the maximum permitted metal melt production rate.

*Annual metal melt production* means the quantity of metal melted in a metal melting furnace or group of all metal melting furnaces at the iron and steel foundry in a given calendar year. For the purposes of this subpart, metal melt production is determined on the basis on the quantity of metal charged to each metal melting furnace; the sum of the metal melt production for each furnace in a given calendar year is the annual metal melt production of the foundry.

*Bag leak detection system* means a system that is capable of continuously monitoring relative particulate matter (dust) loadings in the exhaust of a baghouse to detect bag leaks and other upset conditions. A bag leak detection system includes, but is not limited to, an instrument that operates on triboelectric, electrodynamic, light scattering, light transmittance, or other effect to continuously monitor relative particulate matter loadings.

*Binder chemical* means a component of a system of chemicals used to bind sand together into molds, mold sections, and cores through chemical reaction as opposed to pressure.

*Capture system* means the collection of components used to capture gases and fumes released from one or more emissions points and then convey the captured gas stream to a control device or to the atmosphere. A capture system may include, but is not limited to, the following components as applicable to a given capture system design: Duct intake devices, hoods, enclosures, ductwork, dampers, manifolds, plenums, and fans.

*Chlorinated plastics* means solid polymeric materials that contain chlorine in the polymer chain, such as polyvinyl chloride (PVC) and PVC copolymers.

*Control device* means the air pollution control equipment used to remove particulate matter from the effluent gas stream generated by a metal melting furnace.

*Cupola* means a vertical cylindrical shaft furnace that uses coke and forms of iron and steel such as scrap and foundry returns as the primary charge components and melts the iron and steel through combustion of the coke by a forced upward flow of heated air.

*Deviation* means any instance in which an affected source or an owner or operator of such an affected source:

(1) Fails to meet any requirement or obligation established by this subpart

including, but not limited to, any emissions limitation (including operating limits), management practice, or operation and maintenance requirement; or

(2) Fails to meet any term or condition that is adopted to implement an applicable requirement in this subpart and that is included in the operating permit for any iron and steel foundry required to obtain such a permit.

*Electric arc furnace* means a vessel in which forms of iron and steel such as scrap and foundry returns are melted through resistance heating by an electric current flowing through the arcs formed between the electrodes and the surface of the metal and also flowing through the metal between the arc paths.

*Electric induction furnace* means a vessel in which forms of iron and steel such as scrap and foundry returns are melted though resistance heating by an electric current that is induced in the metal by passing an alternating current through a coil surrounding the metal charge or surrounding a pool of molten metal at the bottom of the vessel.

*Exhaust stream* means gases emitted from a process through a conveyance as defined in this subpart.

*Foundry operations* mean all process equipment and practices used to produce metal castings for shipment. *Foundry operations* include: Mold or core making and coating; scrap handling and preheating; metal melting and inoculation; pouring, cooling, and shakeout; shotblasting, grinding, and other metal finishing operations; and sand handling.

*Free liquids* means material that fails the paint filter liquids test by EPA Method 9095B, Revision 2, November 1994 (incorporated by reference—see § 63.14). That is, if any portion of the material passes through and drops from the filter within the 5-minute test period, the material contains *free liquids*.

*Fugitive emissions* means any pollutant released to the atmosphere that is not discharged through a system of equipment that is specifically designed to capture pollutants at the source, convey them through ductwork, and exhaust them using forced ventilation. *Fugitive emissions* include pollutants released to the atmosphere through windows, doors, vents, or other building openings. *Fugitive emissions* also include pollutants released to the atmosphere through other general building ventilation or exhaust systems not specifically designed to capture pollutants at the source.

*Furfuryl alcohol warm box mold or core making line* means a mold or core making line in which the binder chemical system used is that system commonly designated as a furfuryl alcohol warm box system by the foundry industry.

*Iron and steel foundry* means a facility or portion of a facility that melts scrap, ingot, and/or other forms of iron and/or steel and pours the resulting molten metal into molds to produce final or near final shape products for introduction into commerce. Research and development facilities, operations that only produce non-commercial castings, and operations associated with nonferrous metal production are not included in this definition.

*Large foundry* means, for an existing affected source, an iron and steel foundry with an annual metal melt production greater than 20,000 tons. For a new affected source, *large foundry* means an iron and steel foundry with an annual metal melt capacity greater than 10,000 tons.

*Mercury switch* means each mercury-containing capsule or switch assembly that is part of a convenience light switch mechanism installed in a vehicle.

*Metal charged* means the quantity of scrap metal, pig iron, metal returns, alloy materials, and other solid forms of iron and steel placed into a metal melting furnace. Metal charged does not include the quantity of fluxing agents or, in the case of a cupola, the quantity of coke that is placed into the metal melting furnace.

*Metal melting furnace* means a cupola, electric arc furnace, electric induction furnace, or similar device that converts scrap, foundry returns, and/or other solid forms of iron and/or steel to a liquid state. This definition does not include a holding furnace, an argon oxygen decarburization vessel, or ladle that receives molten metal from a metal melting furnace, to which metal

ingots or other material may be added to adjust the metal chemistry.

*Mold or core making line* means the collection of equipment that is used to mix an aggregate of sand and binder chemicals, form the aggregate into final shape, and harden the formed aggregate. This definition does not include a line for making greensand molds or cores.

*Motor vehicle* means an automotive vehicle not operated on rails and usually is operated with rubber tires for use on highways.

*Motor vehicle scrap* means vehicle or automobile bodies, including automobile body hulks, that have been processed through a shredder. *Motor vehicle scrap* does not include automobile manufacturing bundles, or miscellaneous vehicle parts, such as wheels, bumpers, or other components that do not contain mercury switches.

*Nonferrous metal* means any pure metal other than iron or any metal alloy for which an element other than iron is its major constituent in percent by weight.

*On blast* means those periods of cupola operation when combustion (blast) air is introduced to the cupola furnace and the furnace is capable of producing molten metal. On blast conditions are characterized by both blast air introduction and molten metal production.

*Responsible official* means responsible official as defined in § 63.2.

*Scrap preheater* means a vessel or other piece of equipment in which metal scrap that is to be used as melting furnace feed is heated to a temperature high enough to eliminate volatile impurities or other tramp materials by direct flame heating or similar means of heating. Scrap dryers, which solely remove moisture from metal scrap, are not considered to be scrap preheaters for purposes of this subpart.

*Scrap provider* means the person (including a broker) who contracts directly with an iron and steel foundry to provide motor vehicle scrap. Scrap processors such as shredder operators or vehicle dismantlers that do not sell scrap directly to a foundry are not *scrap providers*.

*Scrubber blowdown* means liquor or slurry discharged from a wet scrubber that is either removed as a waste stream or processed to remove impurities or adjust its composition or pH.

*Small foundry* means, for an existing affected source, an iron and steel foundry that has an annual metal melt production of 20,000 tons or less. For a new affected source, *small foundry* means an iron and steel foundry that has an annual metal melt capacity of 10,000 tons or less.

*Total metal HAP* means, for the purposes of this subpart, the sum of the concentrations of compounds of antimony, arsenic, beryllium, cadmium, chromium, cobalt, lead, manganese, mercury, nickel, and selenium as measured by EPA Method 29 (40 CFR part 60, appendix A–8). Only the measured concentration of the listed analytes that are present at concentrations exceeding one-half the quantitation limit of the analytical method are to be used in the sum. If any of the analytes are not detected or are detected at concentrations less than one-half the quantitation limit of the analytical method, the concentration of those analytes will be assumed to be zero for the purposes of calculating the total metal HAP for this subpart.

[73 FR 252, Jan. 2, 2008, as amended at 85 FR 56104, Sept. 10, 2020]

TABLE 1 TO SUBPART ZZZZZ OF PART 63—PERFORMANCE TEST REQUIREMENTS FOR NEW AND EXISTING AFFECTED SOURCES CLASSIFIED AS LARGE FOUNDRIES

As required in § 63.10898(c) and (h), you must conduct performance tests according to the test methods and procedures in the following table:

| For. . . | You must. . . | According to the following requirements. . . |
|---|---|---|
| 1. Each metal melting furnace subject to a PM or total metal HAP limit in § 63.10895(c). | a. Select sampling port locations and the number of traverse points in each stack or duct using EPA Method 1 or 1A (40 CFR part 60, appendix A).<br>b. Determine volumetric flow rate of the stack gas using Method 2, 2A, 2C, 2D, 2F, or 2G (40 CFR part 60, appendix A).<br>c. Determine dry molecular weight of the stack gas using EPA Method 3, 3A, or 3B (40 CFR part 60, appendix A).[1].<br>d. Measure moisture content of the stack gas using EPA Method 4 (40 CFR part 60, A).<br>e. Determine PM concentration using EPA Method 5, 5B, 5D, 5F, or 5I, as applicable or total metal HAP concentration using EPA Method 29 (40 CFR part 60, appendix A). | Sampling sites must be located at the outlet of the control device (or at the outlet of the emissions source if no control device is present) prior to any releases to the atmosphere.<br>i. Collect a minimum sample volume of 60 dscf of gas during each PM sampling run. The PM concentration is determined using only the front-half (probe rinse and filter) of the PM catch.<br>ii. For Method 29, only the measured concentration of the listed metal HAP analytes that are present at concentrations exceeding one-half the quantification limit of the analytical method are to be used in the sum. If any of the analytes are not detected or are detected at concentrations less than one-half the quantification limit of the analytical method, the concentration of those analytes is assumed to be zero for the purposes of calculating the total metal HAP.<br>iii. A minimum of three valid test runs are needed to comprise a PM or total metal HAP performance test.<br>iv. For cupola metal melting furnaces, sample PM or total metal HAP only during times when the cupola is on blast.<br>v. For electric arc and electric induction metal melting furnaces, sample PM or total metal HAP only during normal melt production conditions, which may include, but are not limited to the following operations: Charging, melting, alloying, refining, slagging, and tapping.<br>vi. Determine and record the total combined weight of tons of metal charged during the duration of each test run. You must compute the process-weighted mass emissions of PM according to Equation 1 of § 63.10898(d) for an individual furnace or Equation 2 of § 63.10898(e) for the group of all metal melting furnaces at the foundry. |
| 2. Fugitive emissions from buildings or structures housing any iron and steel foundry emissions sources subject to opacity limit in § 63.10895(e). | a. Using a certified observer, conduct each opacity test according to EPA Method 9 (40 CFR part 60, appendix A–4) and 40 CFR 63.6(h)(5). | i. The certified observer may identify a limited number of openings or vents that appear to have the highest opacities and perform opacity observations on the identified openings or vents in lieu of performing observations for each opening or vent from the building or structure. Alternatively, a single opacity observation for the entire building or structure may be performed, if the fugitive release points afford such an observation.<br>ii. During testing intervals when PM or total metal HAP performance tests, if applicable, are being conducted, conduct the opacity test such that the opacity observations are recorded during the PM or total metal HAP performance tests. |

| For. . . | You must. . . | According to the following requirements. . . |
|---|---|---|
| | b. As alternative to Method 9 performance test, conduct visible emissions test by Method 22 (40 CFR part 60, appendix A–7). The test is successful if no visible emissions are observed for 90 percent of the readings over 1 hour. If VE is observed greater than 10 percent of the time over 1 hour, then the facility must conduct another performance test as soon as possible, but no later than 15 calendar days after the Method 22 test, using Method 9 (40 CFR part 60, appendix A–4). | i. The observer may identify a limited number of openings or vents that appear to have the highest visible emissions and perform observations on the identified openings or vents in lieu of performing observations for each opening or vent from the building or structure. Alternatively, a single observation for the entire building or structure may be performed, if the fugitive release points afford such an observation.<br>ii. During testing intervals when PM or total metal HAP performance tests, if applicable, are being conducted, conduct the visible emissions test such that the observations are recorded during the PM or total metal HAP performance tests. |

[1] You may also use as an alternative to EPA Method 3B (40 CFR part 60, appendix A), the manual method for measuring the oxygen, carbon dioxide, and carbon monoxide content of exhaust gas, ANSI/ASME PTC 19.10–1981, ''Flue and Exhaust Gas Analyses'' (incorporated by reference—see § 63.14).

## Table 2 to Subpart ZZZZZ of Part 63—Procedures for Establishing Operating Limits for New Affected Sources Classified as Large Foundries

As required in § 63.10898(k), you must establish operating limits using the procedures in the following table:

| For . . . | You must . . . |
|---|---|
| 1. Each wet scrubber subject to the operating limits in § 63.10895(d)(1) for pressure drop and scrubber water flow rate. | Using the CPMS required in § 63.10897(b), measure and record the pressure drop and scrubber water flow rate in intervals of no more than 15 minutes during each PM or total metal HAP test run. Compute and record the average pressure drop and average scrubber water flow rate for all the valid sampling runs in which the applicable emissions limit is met. |
| 2. Each electrostatic precipitator subject to operating limits in § 63.10895(d)(2) for voltage and secondary current (or total power input). | Using the CPMS required in § 63.10897(c), measure and record voltage and secondary current (or total power input) in intervals of no more than 15 minutes during each PM or total metal HAP test run. Compute and record the minimum hourly average voltage and secondary current (or total power input) from all the readings for each valid sampling run in which the applicable emissions limit is met. |

## Table 3 to Subpart ZZZZZ of Part 63—Applicability of General Provisions to New and Existing Affected Sources Classified as Large Foundries

As required in § 63.10900(a), you must meet each requirement in the following table that applies to you:

| Citation | Subject | Applies to large foundry? | Explanation |
|---|---|---|---|
| 63.1 | Applicability | Yes. | |
| 63.2 | Definitions | Yes. | |
| 63.3 | Units and abbreviations | Yes. | |
| 63.4 | Prohibited activities | Yes. | |
| 63.5 | Construction/reconstruction | Yes. | |
| 63.6(a) through (d) | Compliance applicability and dates | Yes. | |
| 63.6(e) | Operating and maintenance requirements. | No | This subpart specifies operating and maintenance requirements. |
| 63.6(f)(1) | Applicability of non-opacity emission standards. | No | This subpart specifies applicability of non-opacity emission standards. |
| 63.6(f)(2) through (3) | Methods and finding of compliance with non-opacity emission standards. | Yes. | |
| 63.6(g) | Use of an alternative nonopacity emission standard. | Yes. | |
| 63.6(h)(1) | Applicability of opacity and visible emissions standards. | No | This subpart specifies applicability of opacity and visible emission standards. |

| Citation | Subject | Applies to large foundry? | Explanation |
|---|---|---|---|
| 63.6(h)(2) through (9) | Methods and other requirements for opacity and visible emissions standards. | Yes. | |
| 63.6(i) through (j) | Compliance extension and Presidential compliance exemption. | Yes. | |
| 63.7(a)(1) through (2) | Applicability and performance test dates. | No | This subpart specifies applicability and performance test dates. |
| 63.7(a)(3) through (4) | Administrators rights to require a performance test and force majeure provisions. | Yes. | |
| 63.7(b) through (d) | Notification of performance test, quality assurance program, and testing facilities. | Yes. | |
| 63.7(e)(1) | Performance test conditions | No | This subpart specifies performance test conditions. |
| 63.7(e)(2) through (4), (f) through (h). | Other performance testing requirements. | Yes. | |
| 63.8(a)(1) through (3), (b), (c)(1)(ii), (c)(2) through (3), (c)(6) through (8), (d)(1) through (2). | Monitoring requirements | Yes. | |
| 63.8(a)(4) | Additional monitoring requirements for control devices in § 63.11. | No. | |
| 63.8(c)(1)(i), (c)(1)(iii) | Operation and maintenance of continuous monitoring systems. | No | Not necessary in light of other requirements of § 63.8 that apply. |
| 63.8(c)(4) | Continuous monitoring system (CMS) requirements. | No. | |
| 63.8(c)(5) | Continuous opacity monitoring system (COMS) minimum procedures. | No. | |
| 63.8(d)(3) | Quality control program | No | This subpart specifies records that must be kept associated with site-specific performance evaluation test plan. |
| 63.8(e), (f)(1) through (6), (g)(1) through (4). | Performance evaluations and alternative monitoring. | Yes. | |
| 63.8(g)(5) | Data reduction | No. | |
| 63.9 | Notification requirements | Yes. | Except for opacity performance tests. |
| 63.10(a), (b)(1), (b)(2)(xii) through (xiv), (b)(3), (d)(1) through (4), (e)(1) through (2), (f). | Recordkeeping and reporting requirements. | Yes. | |
| 63.10(b)(2)(i) through (xi) | Malfunction and CMS records | No. | |
| 63.10(c) | Additional records for CMS | No | This subpart specifies records requirements. |
| 63.10(d)(5) | Periodic startup, shutdown, and malfunction reports. | No. | |
| 63.10(e)(3) | Excess emissions reports | No | This subpart specifies reporting requirements. |
| 63.10(e)(4) | Reporting COMS data | No. | |
| 63.11 | Control device requirements | No. | |
| 63.12 | State authority and delegations | Yes. | |
| 63.13(a) | Reporting to EPA regional offices | Yes | Except: reports and notifications required to be submitted to CEDRI meet this obligation through electronic reporting. |
| 63.13(b) through 63.16 | Addresses of state air pollution control agencies. Incorporation by reference. Availability of information and confidentiality. Performance track provisions. | Yes. | |

[85 FR 56105, Sept. 10, 2020]

## TABLE 4 TO SUBPART ZZZZZ OF PART 63—COMPLIANCE CERTIFICATIONS FOR NEW AND EXISTING AFFECTED SOURCES CLASSIFIED AS LARGE IRON AND STEEL FOUNDRIES

As required by § 63.10900(b), your notification of compliance status must include certifications of compliance according to the following table:

| For. . . | Your notification of compliance status required by §63.9(h) must include this certification of compliance, signed by a responsible official: |
|---|---|
| Each new or existing affected source classified as a large foundry and subject to scrap management requirements in §63.10885(a)(1) and/or (2). | ''This facility has prepared, and will operate by, written material specifications for metallic scrap according to §63.10885(a)(1)'' and/or ''This facility has prepared, and will operate by, written material specifications for general iron and steel scrap according to §63.10885(a)(2).'' |
| Each new or existing affected source classified as a large foundry and subject to mercury switch removal requirements in §63.10885(b). | ''This facility has prepared, and will operate by, written material specifications for the removal of mercury switches and a site-specific plan implementing the material specifications according to §63.10885(b)(1)'' and/or ''This facility participates in and purchases motor vehicles scrap only from scrap providers who participate in a program for removal of mercury switches that has been approved by the EPA Administrator according to §63.10885(b)(2) and have prepared a plan for participation in the EPA approved program according to §63.10885(b)(2)(iv)'' and/or ''The only materials from motor vehicles in the scrap charged to a metal melting furnace at this facility are materials recovered for their specialty alloy content in accordance with §63.10885(b)(3) which are not reasonably expected to contain mercury switches'' and/or ''This facility complies with the requirements for scrap that does not contain motor vehicle scrap in accordance with §63.10885(b)(4).'' |
| Each new or existing affected source classified as a large foundry and subject to §63.10886. | ''This facility complies with the no methanol requirement for the catalyst portion of each binder chemical formulation for a furfuryl alcohol warm box mold or core making line according to §63.10886.'' |
| Each new or existing affected source classified as a large foundry and subject to §63.10895(b). | ''This facility operates a capture and collection system for each emissions source subject to this subpart according to §63.10895(b).'' |
| Each existing affected source classified as a large foundry and subject to §63.10895(c)(1). | ''This facility complies with the PM or total metal HAP emissions limit in §63.10895(c) for each metal melting furnace or group of all metal melting furnaces based on a previous performance test in accordance with §63.10898(a)(1).'' |
| Each new or existing affected source classified as a large foundry and subject to §63.10896(a). | ''This facility has prepared and will operate by an operation and maintenance plan according to §63.10896(a).'' |
| Each new or existing (if applicable) affected source classified as a large foundry and subject to §63.10897(d). | ''This facility has prepared and will operate by a site-specific monitoring plan for each bag leak detection system and submitted the plan to the Administrator for approval according to §63.10897(d)(2).'' |

## Subpart AAAAAA [Reserved]

## Subpart BBBBBB—National Emission Standards for Hazardous Air Pollutants for Source Category: Gasoline Distribution Bulk Terminals, Bulk Plants, and Pipeline Facilities

SOURCE: 73 FR 1933, Jan. 10, 2008, unless otherwise noted.

WHAT THIS SUBPART COVERS

### §63.11080 What is the purpose of this subpart?

This subpart establishes national emission limitations and management practices for hazardous air pollutants (HAP) emitted from area source gasoline distribution bulk terminals, bulk plants, and pipeline facilities. This subpart also establishes requirements to demonstrate compliance with the emission limitations and management practices.

### §63.11081 Am I subject to the requirements in this subpart?

(a) The affected source to which this subpart applies is each area source bulk gasoline terminal, pipeline breakout station, pipeline pumping station, and bulk gasoline plant identified in paragraphs (a)(1) through (4) of this section. You are subject to the requirements in this subpart if you own or operate one or more of the affected area sources identified in paragraphs (a)(1) through (4) of this section.

(1) A bulk gasoline terminal that is not subject to the control requirements of 40 CFR part 63, subpart R (§§63.422, 63.423, and 63.424) or 40 CFR part 63, subpart CC (§§63.646, 63.648, 63.649, and 63.650).

(2) A pipeline breakout station that is not subject to the control requirements of 40 CFR part 63, subpart R (§§63.423 and 63.424).

(3) A pipeline pumping station.

(4) A bulk gasoline plant.

(b) If you are an owner or operator of affected sources, as defined in (a)(1) through (4) of this section, you are not

required to meet the obligation to obtain a permit under 40 CFR part 70 or 40 CFR part 71 as a result of being subject to this subpart. However, you are still subject to the requirement to apply for and obtain a permit under 40 CFR part 70 or 40 CFR part 71 if you meet one or more of the applicability criteria found in 40 CFR 70.3(a) and (b) or 40 CFR part 71.3(a) and (b).

(c) Gasoline storage tanks that are located at affected sources identified in paragraphs (a)(1) through (a)(4) of this section, and that are used only for dispensing gasoline in a manner consistent with tanks located at a gasoline dispensing facility as defined in § 63.11132, are not subject to any of the requirements in this subpart. These tanks must comply with subpart CCCCCC of this part.

(d) The loading of aviation gasoline into storage tanks at airports, and the subsequent transfer of aviation gasoline within the airport, is not subject to this subpart.

(e) The loading of gasoline into marine tank vessels at bulk facilities is not subject to this subpart.

(f) If your affected source's throughput ever exceeds an applicable throughput threshold in the definition of ''bulk gasoline terminal'' or in item 1 in Table 2 to this subpart, the affected source will remain subject to the requirements for sources above the threshold, even if the affected source throughput later falls below the applicable throughput threshold.

(g) For the purpose of determining gasoline throughput, as used in the definition of bulk gasoline plant and bulk gasoline terminal, the 20,000 gallons per day threshold throughput is the maximum calculated design throughout for any day, and is not an average. An enforceable State, local, or Tribal permit limitation on throughput, established prior to the applicable compliance date, may be used in lieu of the 20,000 gallons per day design capacity throughput threshold to determine whether the facility is a bulk gasoline plant or a bulk gasoline terminal.

(h) Storage tanks that are used to load gasoline into a cargo tank for the on-site redistribution of gasoline to another storage tank are subject to this subpart.

(i) For any affected source subject to the provisions of this subpart and another Federal rule, you may elect to comply only with the more stringent provisions of the applicable subparts. You must consider all provisions of the rules, including monitoring, recordkeeping, and reporting. You must identify the affected source and provisions with which you will comply in your Notification of Compliance Status required under § 63.11093. You also must demonstrate in your Notification of Compliance Status that each provision with which you will comply is at least as stringent as the otherwise applicable requirements in this subpart. You are responsible for making accurate determinations concerning the more stringent provisions; noncompliance with this rule is not excused if it is later determined that your determination was in error, and, as a result, you are violating this subpart. Compliance with this rule is your responsibility, and the Notification of Compliance Status does not alter or affect that responsibility.

(j) For new or reconstructed affected sources, as specified in § 63.11082(b) and (c), recordkeeping to document applicable throughput must begin upon startup of the affected source. For existing sources, as specified in § 63.11082(d), recordkeeping to document applicable throughput must begin on January 10, 2008. Records required under this paragraph shall be kept for a period of 5 years.

[73 FR 1933, Jan. 10, 2008, as amended at 76 FR 4176, Jan. 24, 2011]

### § 63.11082 What parts of my affected source does this subpart cover?

(a) The emission sources to which this subpart applies are gasoline storage tanks, gasoline loading racks, vapor collection-equipped gasoline cargo tanks, and equipment components in vapor or liquid gasoline service that meet the criteria specified in Tables 1 through 3 to this subpart.

(b) An affected source is a new affected source if you commenced construction on the affected source after November 9, 2006, and you meet the applicability criteria in § 63.11081 at the time you commenced operation.

(c) An affected source is reconstructed if you meet the criteria for reconstruction as defined in §63.2.

(d) An affected source is an existing affected source if it is not new or reconstructed.

### §63.11083 When do I have to comply with this subpart?

(a) If you have a new or reconstructed affected source, you must comply with this subpart according to paragraphs (a)(1) and (2) of this section.

(1) If you start up your affected source before January 10, 2008, you must comply with the standards in this subpart no later than January 10, 2008.

(2) If you start up your affected source after January 10, 2008, you must comply with the standards in this subpart upon startup of your affected source.

(b) If you have an existing affected source, you must comply with the standards in this subpart no later than January 10, 2011.

(c) If you have an existing affected source that becomes subject to the control requirements in this subpart because of an increase in the daily throughput, as specified in option 1 of Table 2 to this subpart, you must comply with the standards in this subpart no later than 3 years after the affected source becomes subject to the control requirements in this subpart.

[73 FR 1933, Jan. 10, 2008, as amended at 76 FR 4177, Jan. 24, 2011]

## EMISSION LIMITATIONS AND MANAGEMENT PRACTICES

### §63.11085 What are my general duties to minimize emissions?

Each owner or operator of an affected source under this subpart must comply with the requirements of paragraphs (a) and (b) of this section.

(a) You must, at all times, operate and maintain any affected source, including associated air pollution control equipment and monitoring equipment, in a manner consistent with safety and good air pollution control practices for minimizing emissions. Determination of whether such operation and maintenance procedures are being used will be based on information available to the Administrator, which may include, but is not limited to, monitoring results, review of operation and maintenance procedures, review of operation and maintenance records, and inspection of the source.

(b) You must keep applicable records and submit reports as specified in §63.11094(g) and §63.11095(d).

[76 FR 4177, Jan. 24, 2011]

### §63.11086 What requirements must I meet if my facility is a bulk gasoline plant?

Each owner or operator of an affected bulk gasoline plant, as defined in §63.11100, must comply with the requirements of paragraphs (a) through (i) of this section.

(a) Except as specified in paragraph (b) of this section, you must only load gasoline into storage tanks and cargo tanks at your facility by utilizing submerged filling, as defined in §63.11100, and as specified in paragraphs (a)(1), (a)(2), or (a)(3) of this section. The applicable distances in paragraphs (a)(1) and (2) of this section shall be measured from the point in the opening of the submerged fill pipe that is the greatest distance from the bottom of the storage tank.

(1) Submerged fill pipes installed on or before November 9, 2006, must be no more than 12 inches from the bottom of the tank.

(2) Submerged fill pipes installed after November 9, 2006, must be no more than 6 inches from the bottom of the tank.

(3) Submerged fill pipes not meeting the specifications of paragraphs (a)(1) or (a)(2) of this section are allowed if the owner or operator can demonstrate that the liquid level in the gasoline storage tank is always above the entire opening of the fill pipe. Documentation providing such demonstration must be made available for inspection by the Administrator's delegated representative during the course of a site visit.

(b) Gasoline storage tanks with a capacity of less than 250 gallons are not required to comply with the control requirements in paragraph (a) of this section, but must comply only with the requirements in paragraph (d) of this section.

(c) You must perform a monthly leak inspection of all equipment in gasoline

service according to the requirements specified in § 63.11089(a) through (d).

(d) You must not allow gasoline to be handled in a manner that would result in vapor releases to the atmosphere for extended periods of time. Measures to be taken include, but are not limited to, the following:

(1) Minimize gasoline spills;

(2) Clean up spills as expeditiously as practicable;

(3) Cover all open gasoline containers and all gasoline storage tank fill-pipes with a gasketed seal when not in use;

(4) Minimize gasoline sent to open waste collection systems that collect and transport gasoline to reclamation and recycling devices, such as oil/water separators.

(e) You must submit an Initial Notification that you are subject to this subpart by May 9, 2008, or no later than 120 days after the source becomes subject to this subpart, whichever is later unless you meet the requirements in paragraph (g) of this section. The Initial Notification must contain the information specified in paragraphs (e)(1) through (4) of this section. The notification must be submitted to the applicable EPA Regional Office and the delegated state authority, as specified in § 63.13.

(1) The name and address of the owner and the operator.

(2) The address (i.e., physical location) of the bulk plant.

(3) A statement that the notification is being submitted in response to this subpart and identifying the requirements in paragraphs (a), (b), (c), and (d) of this section that apply to you.

(4) A brief description of the bulk plant, including the number of storage tanks in gasoline service, the capacity of each storage tank in gasoline service, and the average monthly gasoline throughput at the affected source.

(f) You must submit a Notification of Compliance Status to the applicable EPA Regional Office and the delegated State authority, as specified in § 63.13, by the compliance date specified in § 63.11083 unless you meet the requirements in paragraph (g) of this section. The Notification of Compliance Status must be signed by a responsible official who must certify its accuracy and must indicate whether the source has complied with the requirements of this subpart. If your facility is in compliance with the requirements of this subpart at the time the Initial Notification required under paragraph (e) of this section is due, the Notification of Compliance Status may be submitted in lieu of the Initial Notification provided it contains the information required under paragraph (e) of this section.

(g) If, prior to January 10, 2008, you are operating in compliance with an enforceable State, local, or tribal rule or permit that requires submerged fill as specified in § 63.11086(a), you are not required to submit an Initial Notification or a Notification of Compliance Status under paragraph (e) or paragraph (f) of this section.

(h) You must comply with the requirements of this subpart by the applicable dates specified in § 63.11083.

(i) You must keep applicable records and submit reports as specified in § 63.11094(d) and (e) and § 63.11095(c).

[73 FR 1933, Jan. 10, 2008, as amended at 76 FR 4177, Jan. 24, 2011; 85 FR 73919, Nov. 19, 2020]

### § 63.11087 What requirements must I meet for gasoline storage tanks if my facility is a bulk gasoline terminal, pipeline breakout station, or pipeline pumping station?

(a) You must meet each emission limit and management practice in Table 1 to this subpart that applies to your gasoline storage tank.

(b) You must comply with the requirements of this subpart by the applicable dates specified in § 63.11083, except that storage vessels equipped with floating roofs and not meeting the requirements of paragraph (a) of this section must be in compliance at the first degassing and cleaning activity after January 10, 2011 or by January 10, 2018, whichever is first.

(c) You must comply with the applicable testing and monitoring requirements specified in § 63.11092(e).

(d) You must submit the applicable notifications as required under § 63.11093.

(e) You must keep records and submit reports as specified in §§ 63.11094 and 63.11095.

(f) If your gasoline storage tank is subject to, and complies with, the control requirements of 40 CFR part 60, subpart Kb of this chapter, your storage tank will be deemed in compliance with this section. You must report this determination in the Notification of Compliance Status report under § 63.11093(b).

### § 63.11088 What requirements must I meet for gasoline loading racks if my facility is a bulk gasoline terminal, pipeline breakout station, or pipeline pumping station?

(a) You must meet each emission limit and management practice in Table 2 to this subpart that applies to you.

(b) As an alternative for railcar cargo tanks to the requirements specified in Table 2 to this subpart, you may comply with the requirements specified in § 63.422(e).

(c) You must comply with the requirements of this subpart by the applicable dates specified in § 63.11083.

(d) You must comply with the applicable testing and monitoring requirements specified in § 63.11092.

(e) You must submit the applicable notifications as required under § 63.11093.

(f) You must keep records and submit reports as specified in §§ 63.11094 and 63.11095.

### § 63.11089 What requirements must I meet for equipment leak inspections if my facility is a bulk gasoline terminal, bulk plant, pipeline breakout station, or pipeline pumping station?

(a) Each owner or operator of a bulk gasoline terminal, bulk plant, pipeline breakout station, or pipeline pumping station subject to the provisions of this subpart shall perform a monthly leak inspection of all equipment in gasoline service, as defined in § 63.11100. For this inspection, detection methods incorporating sight, sound, and smell are acceptable.

(b) A log book shall be used and shall be signed by the owner or operator at the completion of each inspection. A section of the log book shall contain a list, summary description, or diagram(s) showing the location of all equipment in gasoline service at the facility.

(c) Each detection of a liquid or vapor leak shall be recorded in the log book. When a leak is detected, an initial attempt at repair shall be made as soon as practicable, but no later than 5 calendar days after the leak is detected. Repair or replacement of leaking equipment shall be completed within 15 calendar days after detection of each leak, except as provided in paragraph (d) of this section.

(d) Delay of repair of leaking equipment will be allowed if the repair is not feasible within 15 days. The owner or operator shall provide in the semiannual report specified in § 63.11095(b), the reason(s) why the repair was not feasible and the date each repair was completed.

(e) You must comply with the requirements of this subpart by the applicable dates specified in § 63.11083.

(f) You must submit the applicable notifications as required under § 63.11093.

(g) You must keep records and submit reports as specified in §§ 63.11094 and 63.11095.

## TESTING AND MONITORING REQUIREMENTS

### § 63.11092 What testing and monitoring requirements must I meet?

(a) Each owner or operator of a bulk gasoline terminal subject to the emission standard in item 1(b) of Table 2 to this subpart must comply with the requirements in paragraphs (a) through (d) of this section.

(1) Conduct a performance test on the vapor processing and collection systems according to either paragraph (a)(1)(i) or paragraph (a)(1)(ii) of this section.

(i) Use the test methods and procedures in § 60.503 of this chapter, except a reading of 500 parts per million shall be used to determine the level of leaks to be repaired under § 60.503(b) of this chapter.

(ii) Use alternative test methods and procedures in accordance with the alternative test method requirements in § 63.7(f).

(2) If you are operating your gasoline loading rack in compliance with an enforceable State, local, or tribal rule or permit that requires your loading rack to meet an emission limit of 80 milligrams (mg), or less, per liter of gasoline loaded (mg/l), you may submit a statement by a responsible official of your facility certifying the compliance status of your loading rack in lieu of the test required under paragraph (a)(1) of this section.

(3) If you have conducted performance testing on the vapor processing and collection systems within 5 years prior to January 10, 2008, and the test is for the affected facility and is representative of current or anticipated operating processes and conditions, you may submit the results of such testing in lieu of the test required under paragraph (a)(1) of this section, provided the testing was conducted using the test methods and procedures in § 60.503 of this chapter. Should the Administrator deem the prior test data unacceptable, the facility is still required to meet the requirement to conduct an initial performance test within 180 days of the compliance date specified in § 63.11083; thus, previous test reports should be submitted as soon as possible after January 10, 2008.

(4) The performance test requirements of § 63.11092(a) do not apply to flares defined in § 63.11100 and meeting the flare requirements in § 63.11(b). The owner or operator shall demonstrate that the flare and associated vapor collection system is in compliance with the requirements in § 63.11(b) and 40 CFR 60.503(a), (b), and (d).

(b) Each owner or operator of a bulk gasoline terminal subject to the provisions of this subpart shall install, calibrate, certify, operate, and maintain, according to the manufacturer's specifications, a continuous monitoring system (CMS) while gasoline vapors are displaced to the vapor processor systems, as specified in paragraphs (b)(1) through (5) of this section. For each facility conducting a performance test under paragraph (a)(1) of this section, and for each facility utilizing the provisions of paragraphs (a)(2) or (a)(3) of this section, the CMS must be installed by January 10, 2011.

(1) For each performance test conducted under paragraph (a)(1) of this section, the owner or operator shall determine a monitored operating parameter value for the vapor processing system using the procedures specified in paragraphs (b)(1)(i) through (iv) of this section. During the performance test, continuously record the operating parameter as specified under paragraphs (b)(1)(i) through (iv) of this section.

(i) Where a carbon adsorption system is used, the owner or operator shall monitor the operation of the system as specified in paragraphs (b)(1)(i)(A) or (B) of this section.

(A) A continuous emissions monitoring system (CEMS) capable of measuring organic compound concentration shall be installed in the exhaust air stream.

(B) As an alternative to paragraph (b)(1)(i)(A) of this section, you may choose to meet the requirements listed in paragraph (b)(1)(i)(B)(*1*) and (*2*) of this section.

(*1*) Carbon adsorption devices shall be monitored as specified in paragraphs (b)(1)(i)(B)(*1*)(*i*),(*ii*), and (*iii*) of this section.

(*i*) Vacuum level shall be monitored using a pressure transmitter installed in the vacuum pump suction line, with the measurements displayed on a gauge that can be visually observed. Each carbon bed shall be observed during one complete regeneration cycle on each day of operation of the loading rack to determine the maximum vacuum level achieved.

(*ii*) Conduct annual testing of the carbon activity for the carbon in each carbon bed. Carbon activity shall be tested in accordance with the butane working capacity test of the American Society for Testing and Materials (ASTM) Method D 5228–92 (incorporated by reference, see § 63.14), or by another suitable procedure as recommended by the manufacturer.

(*iii*) Conduct monthly measurements of the carbon bed outlet volatile organic compounds (VOC) concentration over the last 5 minutes of an adsorption cycle for each carbon bed, documenting the highest measured VOC concentration. Measurements shall be made using a portable analyzer, or a

permanently mounted analyzer, in accordance with 40 CFR part 60, Appendix A–7, EPA Method 21 for open-ended lines.

(*2*) Develop and submit to the Administrator a monitoring and inspection plan that describes the owner or operator's approach for meeting the requirements in paragraphs (b)(1)(i)(B)(*2*)(*i*) through (*v*) of this section.

(*i*) The lowest maximum required vacuum level and duration needed to assure regeneration of the carbon beds shall be determined by an engineering analysis or from the manufacturer's recommendation and shall be documented in the monitoring and inspection plan.

(*ii*) The owner or operator shall verify, during each day of operation of the loading rack, the proper valve sequencing, cycle time, gasoline flow, purge air flow, and operating temperatures. Verification shall be through visual observation, or through an automated alarm or shutdown system that monitors system operation. A manual or electronic record of the start and end of a shutdown event may be used.

(*iii*) The owner or operator shall perform semi-annual preventive maintenance inspections of the carbon adsorption system, including the automated alarm or shutdown system for those units so equipped, according to the recommendations of the manufacturer of the system.

(*iv*) The monitoring plan developed under paragraph (*2*) of this section shall specify conditions that would be considered malfunctions of the carbon adsorption system during the inspections or automated monitoring performed under paragraphs (b)(1)(i)(B)(*2*)(*i*) through (*iii*) of this section, describe specific corrective actions that will be taken to correct any malfunction, and define what the owner or operator would consider to be a timely repair for each potential malfunction.

(*v*) The owner or operator shall document the maximum vacuum level observed on each carbon bed from each daily inspection and the maximum VOC concentration observed from each carbon bed on each monthly inspection as well as any system malfunction, as defined in the monitoring and inspection plan, and any activation of the automated alarm or shutdown system with a written entry into a log book or other permanent form of record. Such record shall also include a description of the corrective action taken and whether such corrective actions were taken in a timely manner, as defined in the monitoring and inspection plan, as well as an estimate of the amount of gasoline loaded during the period of the malfunction.

(ii) Where a refrigeration condenser system is used, a continuous parameter monitoring system (CPMS) capable of measuring temperature shall be installed immediately downstream from the outlet to the condenser section. Alternatively, a CEMS capable of measuring organic compound concentration may be installed in the exhaust air stream.

(iii) Where a thermal oxidation system other than a flare is used, the owner or operator shall monitor the operation of the system as specified in paragraphs (b)(1)(iii)(A) or (B) of this section.

(A) A CPMS capable of measuring temperature shall be installed in the firebox or in the ductwork immediately downstream from the firebox in a position before any substantial heat exchange occurs.

(B) As an alternative to paragraph (b)(1)(iii)(A) of this section, you may choose to meet the requirements listed in paragraphs (b)(1)(iii)(B)(*1*) and (*2*) of this section.

(*1*) The presence of a thermal oxidation system pilot flame shall be monitored using a heat-sensing device, such as an ultraviolet beam sensor or a thermocouple, installed in proximity of the pilot light, to indicate the presence of a flame. The heat-sensing device shall send a positive parameter value to indicate that the pilot flame is on, or a negative parameter value to indicate that the pilot flame is off.

(*2*) Develop and submit to the Administrator a monitoring and inspection plan that describes the owner or operator's approach for meeting the requirements in paragraphs (b)(1)(iii)(B)(*2*)(*i*) through (*v*) of this section.

(*i*) The thermal oxidation system shall be equipped to automatically prevent gasoline loading operations from

beginning at any time that the pilot flame is absent.

(*ii*) The owner or operator shall verify, during each day of operation of the loading rack, the proper operation of the assist-air blower and the vapor line valve. Verification shall be through visual observation, or through an automated alarm or shutdown system that monitors system operation. A manual or electronic record of the start and end of a shutdown event may be used.

(*iii*) The owner or operator shall perform semi-annual preventive maintenance inspections of the thermal oxidation system, including the automated alarm or shutdown system for those units so equipped, according to the recommendations of the manufacturer of the system.

(*iv*) The monitoring plan developed under paragraph (*2*) of this section shall specify conditions that would be considered malfunctions of the thermal oxidation system during the inspections or automated monitoring performed under paragraphs (b)(1)(iii)(B)(*2*)(*ii*) and (*iii*) of this section, describe specific corrective actions that will be taken to correct any malfunction, and define what the owner or operator would consider to be a timely repair for each potential malfunction.

(*v*) The owner or operator shall document any system malfunction, as defined in the monitoring and inspection plan, and any activation of the automated alarm or shutdown system with a written entry into a log book or other permanent form of record. Such record shall also include a description of the corrective action taken and whether such corrective actions were taken in a timely manner, as defined in the monitoring and inspection plan, as well as an estimate of the amount of gasoline loaded during the period of the malfunction.

(iv) Monitoring an alternative operating parameter or a parameter of a vapor processing system other than those listed in paragraphs (b)(1)(i) through (iii) of this section will be allowed upon demonstrating to the Administrator's satisfaction that the alternative parameter demonstrates continuous compliance with the emission standard in § 63.11088(a).

(2) Where a flare meeting the requirements in § 63.11(b) is used, a heat-sensing device, such as an ultraviolet beam sensor or a thermocouple, must be installed in proximity to the pilot light to indicate the presence of a flame.

(3) Determine an operating parameter value based on the parameter data monitored during the performance test, supplemented by engineering assessments and the manufacturer's recommendations.

(4) Provide for the Administrator's approval the rationale for the selected operating parameter value, monitoring frequency, and averaging time, including data and calculations used to develop the value and a description of why the value, monitoring frequency, and averaging time demonstrate continuous compliance with the emission standard in § 63.11088(a).

(5) If you have chosen to comply with the performance testing alternatives provided under paragraph (a)(2) or paragraph (a)(3) of this section, the monitored operating parameter value may be determined according to the provisions in paragraph (b)(5)(i) or paragraph (b)(5)(ii) of this section.

(i) Monitor an operating parameter that has been approved by the Administrator and is specified in your facility's current enforceable operating permit. At the time that the Administrator requires a new performance test, you must determine the monitored operating parameter value according to the requirements specified in paragraph (b) of this section.

(ii) Determine an operating parameter value based on engineering assessment and the manufacturer's recommendation and submit the information specified in paragraph (b)(4) of this section for approval by the Administrator. At the time that the Administrator requires a new performance test, you must determine the monitored operating parameter value according to the requirements specified in paragraph (b) of this section.

(c) For performance tests performed after the initial test required under paragraph (a) of this section, the owner or operator shall document the reasons

for any change in the operating parameter value since the previous performance test.

(d) Each owner or operator of a bulk gasoline terminal subject to the provisions of this subpart shall comply with the requirements in paragraphs (d)(1) through (4) of this section.

(1) Operate the vapor processing system in a manner not to exceed or not to go below, as appropriate, the operating parameter value for the parameters described in paragraph (b)(1) of this section.

(2) In cases where an alternative parameter pursuant to paragraph (b)(1)(iv) or paragraph (b)(5)(i) of this section is approved, each owner or operator shall operate the vapor processing system in a manner not to exceed or not to go below, as appropriate, the alternative operating parameter value.

(3) Operation of the vapor processing system in a manner exceeding or going below the operating parameter value, as appropriate, shall constitute a violation of the emission standard in §63.11088(a), except as specified in paragraph (d)(4) of this section.

(4) For the monitoring and inspection, as required under paragraphs (b)(1)(i)(B)(*2*) and (b)(1)(iii)(B)(*2*) of this section, malfunctions that are discovered shall not constitute a violation of the emission standard in §63.11088(a) if corrective actions as described in the monitoring and inspection plan are followed. The owner or operator must:

(i) Initiate corrective action to determine the cause of the problem within 1 hour;

(ii) Initiate corrective action to fix the problem within 24 hours;

(iii) Complete all corrective actions needed to fix the problem as soon as practicable consistent with good air pollution control practices for minimizing emissions;

(iv) Minimize periods of start-up, shutdown, or malfunction; and

(v) Take any necessary corrective actions to restore normal operation and prevent the recurrence of the cause of the problem.

(e) Each owner or operator subject to the emission standard in §63.11087 for gasoline storage tanks shall comply with the requirements in paragraphs (e)(1) through (3) of this section.

(1) If your gasoline storage tank is equipped with an internal floating roof, you must perform inspections of the floating roof system according to the requirements of §60.113b(a) if you are complying with option 2(b) in Table 1 to this subpart, or according to the requirements of §63.1063(c)(1) if you are complying with option 2(d) in Table 1 to this subpart.

(2) If your gasoline storage tank is equipped with an external floating roof, you must perform inspections of the floating roof system according to the requirements of §60.113b(b) if you are complying with option 2(c) in Table 1 to this subpart, or according to the requirements of §63.1063(c)(2) if you are complying with option 2(d) in Table 1 to this subpart.

(3) If your gasoline storage tank is equipped with a closed vent system and control device, you must conduct a performance test and determine a monitored operating parameter value in accordance with the requirements in paragraphs (a) through (d) of this section, except that the applicable level of control specified in paragraph (a)(2) of this section shall be a 95-percent reduction in inlet total organic compounds (TOC) levels rather than 80 mg/l of gasoline loaded.

(f) The annual certification test for gasoline cargo tanks shall consist of the test methods specified in paragraphs (f)(1) or (f)(2) of this section. Affected facilities that are subject to subpart XX of 40 CFR part 60 may elect, after notification to the subpart XX delegated authority, to comply with paragraphs (f)(1) and (2) of this section.

(1) *EPA Method 27, Appendix A–8, 40 CFR part 60.* Conduct the test using a time period (t) for the pressure and vacuum tests of 5 minutes. The initial pressure ($P_i$) for the pressure test shall be 460 millimeters (mm) of water (18 inches of water), gauge. The initial vacuum ($V_i$) for the vacuum test shall be 150 mm of water (6 inches of water), gauge. The maximum allowable pressure and vacuum changes ($\Delta$ p, $\Delta$ v) for all affected gasoline cargo tanks is 3 inches of water, or less, in 5 minutes.

(2) *Railcar bubble leak test procedures.* As an alternative to the annual certification test required under paragraph (1) of this section for certification leakage testing of gasoline cargo tanks, the owner or operator may comply with paragraphs (f)(2)(i) and (ii) of this section for railcar cargo tanks, provided the railcar cargo tank meets the requirement in paragraph (f)(2)(iii) of this section.

(i) Comply with the requirements of 49 CFR 173.31(d), 49 CFR 179.7, 49 CFR 180.509, and 49 CFR 180.511 for the periodic testing of railcar cargo tanks.

(ii) The leakage pressure test procedure required under 49 CFR 180.509(j) and used to show no indication of leakage under 49 CFR 180.511(f) shall be ASTM E 515–95, BS EN 1593:1999, or another bubble leak test procedure meeting the requirements in 49 CFR 179.7, 49 CFR 180.505, and 49 CFR 180.509.

(iii) The alternative requirements in this paragraph (f)(2) may not be used for any railcar cargo tank that collects gasoline vapors from a vapor balance system and the system complies with a Federal, State, local, or tribal rule or permit. A vapor balance system is a piping and collection system designed to collect gasoline vapors displaced from a storage vessel, barge, or other container being loaded, and routes the displaced gasoline vapors into the railcar cargo tank from which liquid gasoline is being unloaded.

(g) *Conduct of performance tests.* Performance tests conducted for this subpart shall be conducted under such conditions as the Administrator specifies to the owner or operator, based on representative performance (*i.e.*, performance based on normal operating conditions) of the affected source. Upon request, the owner or operator shall make available to the Administrator such records as may be necessary to determine the conditions of performance tests.

[73 FR 1933, Jan. 10, 2008, as amended at 73 FR 12276, Mar. 7, 2008; 76 FR 4177, Jan. 24, 2011]

NOTIFICATIONS, RECORDS, AND REPORTS

### § 63.11093 What notifications must I submit and when?

(a) Each owner or operator of an affected source under this subpart must submit an Initial Notification as specified in § 63.9(b). If your facility is in compliance with the requirements of this subpart at the time the Initial Notification is due, the Notification of Compliance Status required under paragraph (b) of this section may be submitted in lieu of the Initial Notification.

(b) Each owner or operator of an affected source under this subpart must submit a Notification of Compliance Status as specified in § 63.9(h). The Notification of Compliance Status must specify which of the compliance options included in Table 1 to this subpart is used to comply with this subpart.

(c) Each owner or operator of an affected bulk gasoline terminal under this subpart must submit a Notification of Performance Test, as specified in § 63.9(e), prior to initiating testing required by § 63.11092(a) or § 63.11092(b).

(d) Each owner or operator of any affected source under this subpart must submit additional notifications specified in § 63.9, as applicable.

### § 63.11094 What are my recordkeeping requirements?

(a) Each owner or operator of a bulk gasoline terminal or pipeline breakout station whose storage vessels are subject to the provisions of this subpart shall keep records as specified in § 60.115b of this chapter if you are complying with options 2(a), 2(b), or 2(c) in Table 1 to this subpart, except records shall be kept for at least 5 years. If you are complying with the requirements of option 2(d) in Table 1 to this subpart, you shall keep records as specified in § 63.1065.

(b) Each owner or operator of a bulk gasoline terminal subject to the provisions of this subpart shall keep records of the test results for each gasoline cargo tank loading at the facility as specified in paragraphs (b)(1) through (3) of this section.

(1) Annual certification testing performed under §63.11092(f)(1) and periodic railcar bubble leak testing performed under §63.11092(f)(2).

(2) The documentation file shall be kept up-to-date for each gasoline cargo tank loading at the facility. The documentation for each test shall include, as a minimum, the following information:

(i) *Name of test:* Annual Certification Test—Method 27 or Periodic Railcar Bubble Leak Test Procedure.

(ii) Cargo tank owner's name and address.

(iii) Cargo tank identification number.

(iv) Test location and date.

(v) Tester name and signature.

(vi) *Witnessing inspector, if any:* Name, signature, and affiliation.

(vii) *Vapor tightness repair:* Nature of repair work and when performed in relation to vapor tightness testing.

(viii) *Test results:* Test pressure; pressure or vacuum change, mm of water; time period of test; number of leaks found with instrument; and leak definition.

(3) If you are complying with the alternative requirements in §63.11088(b), you must keep records documenting that you have verified the vapor tightness testing according to the requirements of the Administrator.

(c) As an alternative to keeping records at the terminal of each gasoline cargo tank test result as required in paragraph (b) of this section, an owner or operator may comply with the requirements in either paragraph (c)(1) or paragraph (c)(2) of this section.

(1) An electronic copy of each record is instantly available at the terminal.

(i) The copy of each record in paragraph (c)(1) of this section is an exact duplicate image of the original paper record with certifying signatures.

(ii) The Administrator is notified in writing that each terminal using this alternative is in compliance with paragraph (c)(1) of this section.

(2) For facilities that use a terminal automation system to prevent gasoline cargo tanks that do not have valid cargo tank vapor tightness documentation from loading (e.g., via a card lockout system), a copy of the documentation is made available (e.g., via facsimile) for inspection by the Administrator's delegated representatives during the course of a site visit, or within a mutually agreeable time frame.

(i) The copy of each record in paragraph (c)(2) of this section is an exact duplicate image of the original paper record with certifying signatures.

(ii) The Administrator is notified in writing that each terminal using this alternative is in compliance with paragraph (c)(2) of this section.

(d) Each owner or operator subject to the equipment leak provisions of §63.11089 shall prepare and maintain a record describing the types, identification numbers, and locations of all equipment in gasoline service. For facilities electing to implement an instrument program under §63.11089, the record shall contain a full description of the program.

(e) Each owner or operator of an affected source subject to equipment leak inspections under §63.11089 shall record in the log book for each leak that is detected the information specified in paragraphs (e)(1) through (7) of this section.

(1) The equipment type and identification number.

(2) The nature of the leak (i.e., vapor or liquid) and the method of detection (i.e., sight, sound, or smell).

(3) The date the leak was detected and the date of each attempt to repair the leak.

(4) Repair methods applied in each attempt to repair the leak.

(5) ''Repair delayed'' and the reason for the delay if the leak is not repaired within 15 calendar days after discovery of the leak.

(6) The expected date of successful repair of the leak if the leak is not repaired within 15 days.

(7) The date of successful repair of the leak.

(f) Each owner or operator of a bulk gasoline terminal subject to the provisions of this subpart shall:

(1) Keep an up-to-date, readily accessible record of the continuous monitoring data required under §63.11092(b) or §63.11092(e). This record shall indicate the time intervals during which loadings of gasoline cargo tanks have occurred or, alternatively, shall record

the operating parameter data only during such loadings. The date and time of day shall also be indicated at reasonable intervals on this record.

(2) Record and report simultaneously with the Notification of Compliance Status required under § 63.11093(b):

(i) All data and calculations, engineering assessments, and manufacturer's recommendations used in determining the operating parameter value under § 63.11092(b) or § 63.11092(e); and

(ii) The following information when using a flare under provisions of § 63.11(b) to comply with § 63.11087(a):

(A) Flare design (i.e., steam-assisted, air-assisted, or non-assisted); and

(B) All visible emissions (VE) readings, heat content determinations, flow rate measurements, and exit velocity determinations made during the compliance determination required under § 63.11092(e)(3).

(3) Keep an up-to-date, readily accessible copy of the monitoring and inspection plan required under § 63.11092(b)(1)(i)(B)(*2*) or § 63.11092(b)(1)(iii)(B)(*2*).

(4) Keep an up-to-date, readily accessible record of all system malfunctions, as specified in § 63.11092(b)(1)(i)(B)(*2*)(*v*) or § 63.11092(b)(1)(iii)(B)(*2*)(*v*).

(5) If an owner or operator requests approval to use a vapor processing system or monitor an operating parameter other than those specified in § 63.11092(b), the owner or operator shall submit a description of planned reporting and recordkeeping procedures.

(g) Each owner or operator of an affected source under this subpart shall keep records as specified in paragraphs (g)(1) and (2) of this section.

(1) Records of the occurrence and duration of each malfunction of operation (*i.e.*, process equipment) or the air pollution control and monitoring equipment.

(2) Records of actions taken during periods of malfunction to minimize emissions in accordance with § 63.11085(a), including corrective actions to restore malfunctioning process and air pollution control and monitoring equipment to its normal or usual manner of operation.

[73 FR 1933, Jan. 10, 2008, as amended at 76 FR 4178, Jan. 24, 2011]

## § 63.11095 What are my reporting requirements?

(a) Each owner or operator of a bulk terminal or a pipeline breakout station subject to the control requirements of this subpart shall include in a semiannual compliance report to the Administrator the following information, as applicable:

(1) For storage vessels, if you are complying with options 2(a), 2(b), or 2(c) in Table 1 to this subpart, the information specified in § 60.115b(a), § 60.115b(b), or § 60.115b(c) of this chapter, depending upon the control equipment installed, or, if you are complying with option 2(d) in Table 1 to this subpart, the information specified in § 63.1066.

(2) For loading racks, each loading of a gasoline cargo tank for which vapor tightness documentation had not been previously obtained by the facility.

(3) For equipment leak inspections, the number of equipment leaks not repaired within 15 days after detection.

(4) For storage vessels complying with § 63.11087(b) after January 10, 2011, the storage vessel's Notice of Compliance Status information can be included in the next semi-annual compliance report in lieu of filing a separate Notification of Compliance Status report under § 63.11093.

(b) Each owner or operator of an affected source subject to the control requirements of this subpart shall submit an excess emissions report to the Administrator at the time the semiannual compliance report is submitted. Excess emissions events under this subpart, and the information to be included in the excess emissions report, are specified in paragraphs (b)(1) through (5) of this section.

(1) Each instance of a non-vapor-tight gasoline cargo tank loading at the facility in which the owner or operator failed to take steps to assure that such cargo tank would not be reloaded at the facility before vapor tightness documentation for that cargo tank was obtained.

(2) Each reloading of a non-vapor-tight gasoline cargo tank at the facility before vapor tightness documentation for that cargo tank is obtained by the facility in accordance with § 63.11094(b).

(3) Each exceedance or failure to maintain, as appropriate, the monitored operating parameter value determined under § 63.11092(b). The report shall include the monitoring data for the days on which exceedances or failures to maintain have occurred, and a description and timing of the steps taken to repair or perform maintenance on the vapor collection and processing systems or the CMS.

(4) Each instance in which malfunctions discovered during the monitoring and inspections required under § 63.11092(b)(1)(i)(B)(*2*) and (b)(1)(iii)(B)(*2*) were not resolved according to the necessary corrective actions described in the monitoring and inspection plan. The report shall include a description of the malfunction and the timing of the steps taken to correct the malfunction.

(5) For each occurrence of an equipment leak for which no repair attempt was made within 5 days or for which repair was not completed within 15 days after detection:

(i) The date on which the leak was detected;

(ii) The date of each attempt to repair the leak;

(iii) The reasons for the delay of repair; and

(iv) The date of successful repair.

(c) Each owner or operator of a bulk gasoline plant or a pipeline pumping station shall submit a semiannual excess emissions report, including the information specified in paragraphs (a)(3) and (b)(5) of this section, only for a 6-month period during which an excess emission event has occurred. If no excess emission events have occurred during the previous 6-month period, no report is required.

(d) Each owner or operator of an affected source under this subpart shall submit a semiannual report including the number, duration, and a brief description of each type of malfunction which occurred during the reporting period and which caused or may have caused any applicable emission limitation to be exceeded. The report must also include a description of actions taken by an owner or operator during a malfunction of an affected source to minimize emissions in accordance with § 63.11085(a), including actions taken to correct a malfunction. The report may be submitted as a part of the semiannual compliance report, if one is required. Owners or operators of affected bulk plants and pipeline pumping stations are not required to submit reports for periods during which no malfunctions occurred.

[73 FR 1933, Jan. 10, 2008, as amended at 73 FR 12276, Mar. 7, 2008; 76 FR 4178, Jan. 24, 2011]

OTHER REQUIREMENTS AND INFORMATION

### § 63.11098 What parts of the General Provisions apply to me?

Table 3 to this subpart shows which parts of the General Provisions apply to you.

### § 63.11099 Who implements and enforces this subpart?

(a) This subpart can be implemented and enforced by the U.S. EPA or a delegated authority such as the applicable State, local, or tribal agency. If the U.S. EPA Administrator has delegated authority to a State, local, or tribal agency, then that agency, in addition to the U.S. EPA, has the authority to implement and enforce this subpart. Contact the applicable U.S. EPA Regional Office to find out if implementation and enforcement of this subpart is delegated to a State, local, or tribal agency.

(b) In delegating implementation and enforcement authority of this subpart to a State, local, or tribal agency under subpart E of this part, the authorities specified in paragraph (c) of this section are retained by the Administrator of U.S. EPA and cannot be transferred to the State, local, or tribal agency.

(c) The authorities that cannot be delegated to State, local, or tribal agencies are as specified in paragraphs (c)(1) through (4) of this section.

(1) Approval of alternatives to the requirements in §§ 63.11086 through 63.11088 and § 63.11092. Any owner or operator requesting to use an alternative means of emission limitation for storage vessels in Table 1 to this subpart must follow either the provisions in § 60.114b of this chapter if you are complying with options 2(a), 2(b), or 2(c) in

Table 1 to this subpart, or the provisions in § 63.1064 if you are complying with option 2(d) in Table 1 to this subpart.

(2) Approval of major alternatives to test methods under § 63.7(e)(2)(ii) and (f), as defined in § 63.90, and as required in this subpart.

(3) Approval of major alternatives to monitoring under § 63.8(f), as defined in § 63.90, and as required in this subpart.

(4) Approval of major alternatives to recordkeeping and reporting under § 63.10(f), as defined in § 63.90, and as required in this subpart.

### § 63.11100 What definitions apply to this subpart?

As used in this subpart, all terms not defined herein shall have the meaning given them in the Clean Air Act (CAA), in subparts A, K, Ka, Kb, and XX of part 60 of this chapter, or in subparts A, R, and WW of this part. All terms defined in both subpart A of part 60 of this chapter and subparts A, R, and WW of this part shall have the meaning given in subparts A, R, and WW of this part. For purposes of this subpart, definitions in this section supersede definitions in other parts or subparts.

*Administrator* means the Administrator of the United States Environmental Protection Agency or his or her authorized representative (e.g., a State that has been delegated the authority to implement the provisions of this subpart).

*Bulk gasoline plant* means any gasoline storage and distribution facility that receives gasoline by pipeline, ship or barge, or cargo tank, and subsequently loads the gasoline into gasoline cargo tanks for transport to gasoline dispensing facilities, and has a gasoline throughput of less than 20,000 gallons per day. Gasoline throughput shall be the maximum calculated design throughput as may be limited by compliance with an enforceable condition under Federal, State, or local law, and discoverable by the Administrator and any other person.

*Bulk gasoline terminal* means any gasoline storage and distribution facility that receives gasoline by pipeline, ship or barge, or cargo tank and has a gasoline throughput of 20,000 gallons per day or greater. Gasoline throughput shall be the maximum calculated design throughput as may be limited by compliance with an enforceable condition under Federal, State, or local law and discoverable by the Administrator and any other person.

*Equipment* means each valve, pump, pressure relief device, sampling connection system, open-ended valve or line, and flange or other connector in the gasoline liquid transfer and vapor collection systems. This definition also includes the entire vapor processing system except the exhaust port(s) or stack(s).

*Flare* means a thermal oxidation system using an open (without enclosure) flame.

*Gasoline* means any petroleum distillate or petroleum distillate/alcohol blend having a Reid vapor pressure of 27.6 kilopascals or greater, which is used as a fuel for internal combustion engines.

*Gasoline cargo tank* means a delivery tank truck or railcar which is loading gasoline or which has loaded gasoline on the immediately previous load.

*Gasoline storage tank or vessel* means each tank, vessel, reservoir, or container used for the storage of gasoline, but does not include:

(1) Frames, housing, auxiliary supports, or other components that are not directly involved in the containment of gasoline or gasoline vapors;

(2) Subsurface caverns or porous rock reservoirs;

(3) Oil/water separators and sumps, including butane blending sample recovery tanks, used to collect drained material such that it can be pumped to storage or back into a process; or

(4) Tanks or vessels permanently attached to mobile sources such as trucks, railcars, barges, or ships.

*In gasoline service* means that a piece of equipment is used in a system that transfers gasoline or gasoline vapors.

*Monthly* means once per calendar month at regular intervals of no less than 28 days and no more than 35 days.

*Operating parameter value* means a value for an operating or emission parameter of the vapor processing system (e.g., temperature) which, if maintained continuously by itself or in combination with one or more other

operating parameter values, determines that an owner or operator has complied with the applicable emission standard. The operating parameter value is determined using the procedures specified in § 63.11092(b).

*Pipeline breakout station* means a facility along a pipeline containing storage vessels used to relieve surges or receive and store gasoline from the pipeline for re-injection and continued transportation by pipeline or to other facilities.

*Pipeline pumping station* means a facility along a pipeline containing pumps to maintain the desired pressure and flow of product through the pipeline, and not containing gasoline storage tanks other than surge control tanks.

*Submerged filling* means, for the purposes of this subpart, the filling of a gasoline cargo tank or a stationary storage tank through a submerged fill pipe whose discharge is no more than the applicable distance specified in § 63.11086(a) from the bottom of the tank. Bottom filling of gasoline cargo tanks or storage tanks is included in this definition.

*Surge control tank or vessel* means, for the purposes of this subpart, those tanks or vessels used only for controlling pressure in a pipeline system during surges or other variations from normal operations.

*Vapor collection-equipped gasoline cargo tank* means a gasoline cargo tank that is outfitted with the equipment necessary to transfer vapors, displaced during the loading of gasoline into the cargo tank, to a vapor processor system.

*Vapor-tight gasoline cargo tank* means a gasoline cargo tank which has demonstrated within the 12 preceding months that it meets the annual certification test requirements in § 63.11092(f).

[73 FR 1933, Jan. 10, 2008, as amended at 76 FR 4178, Jan. 24, 2011]

TABLE 1 TO SUBPART BBBBBB OF PART 63—APPLICABILITY CRITERIA, EMISSION LIMITS, AND MANAGEMENT PRACTICES FOR STORAGE TANKS

| If you own or operate . . . | Then you must . . . |
|---|---|
| 1. A gasoline storage tank meeting either of the following conditions:<br>(i) a capacity of less than 75 cubic meters ($m^3$); or .....<br>(ii) a capacity of less than 151 $m^3$ and a gasoline throughput of 480 gallons per day or less. Gallons per day is calculated by summing the current day's throughput, plus the throughput for the previous 364 days, and then dividing that sum by 365. | Equip each gasoline storage tank with a fixed roof that is mounted to the storage tank in a stationary manner, and maintain all openings in a closed position at all times when not in use. |
| 2. A gasoline storage tank with a capacity of greater than or equal to 75 $m^3$ and not meeting any of the criteria specified in item 1 of this Table. | Do the following:<br>(a) Reduce emissions of total organic HAP or TOC by 95 weight-percent with a closed vent system and control device, as specified in § 60.112b(a)(3) of this chapter; or<br>(b) Equip each internal floating roof gasoline storage tank according to the requirements in § 60.112b(a)(1) of this chapter, except for the secondary seal requirements under § 60.112b(a)(1)(ii)(B) and the requirements in § 60.112b(a)(1)(iv) through (ix) of this chapter; and<br>(c) Equip each external floating roof gasoline storage tank according to the requirements in § 60.112b(a)(2) of this chapter, except that the requirements of § 60.112b(a)(2)(ii) of this chapter shall only be required if such storage tank does not currently meet the requirements of § 60.112b(a)(2)(i) of this chapter; or<br>(d) Equip and operate each internal and external floating roof gasoline storage tank according to the applicable requirements in § 63.1063(a)(1) and (b), except for the secondary seal requirements under § 63.1063(a)(1)(i)(C) and (D), and equip each external floating roof gasoline storage tank according to the requirements of § 63.1063(a)(2) if such storage tank does not currently meet the requirements of § 63.1063(a)(1). |
| 3. A surge control tank ..... | Equip each tank with a fixed roof that is mounted to the tank in a stationary manner and with a pressure/vacuum vent with a positive cracking pressure of no less than 0.50 inches of water. Maintain all openings in a closed position at all times when not in use. |

[76 FR 4179, Jan. 24, 2011]

TABLE 2 TO SUBPART BBBBBB OF PART 63—APPLICABILITY CRITERIA, EMISSION LIMITS, AND MANAGEMENT PRACTICES FOR LOADING RACKS

| If you own or operate . . . | Then you must . . . |
|---|---|
| 1. A bulk gasoline terminal loading rack(s) with a gasoline throughput (total of all racks) of 250,000 gallons per day, or greater. Gallons per day is calculated by summing the current day's throughput, plus the throughput for the previous 364 days, and then dividing that sum by 365. | (a) Equip your loading rack(s) with a vapor collection system designed to collect the TOC vapors displaced from cargo tanks during product loading; and<br>(b) Reduce emissions of TOC to less than or equal to 80 mg/l of gasoline loaded into gasoline cargo tanks at the loading rack; and<br>(c) Design and operate the vapor collection system to prevent any TOC vapors collected at one loading rack or lane from passing through another loading rack or lane to the atmosphere; and<br>(d) Limit the loading of gasoline into gasoline cargo tanks that are vapor tight using the procedures specified in § 60.502(e) through (j) of this chapter. For the purposes of this section, the term "tank truck" as used in § 60.502(e) through (j) of this chapter means "cargo tank" as defined in § 63.11100. |
| 2. A bulk gasoline terminal loading rack(s) with a gasoline throughput (total of all racks) of less than 250,000 gallons per day. Gallons per day is calculated by summing the current day's throughput, plus the throughput for the previous 364 days, and then dividing that sum by 365 | (a) Use submerged filling with a submerged fill pipe that is no more than 6 inches from the bottom of the cargo tank; and<br>(b) Make records available within 24 hours of a request by the Administrator to document your gasoline throughput. |

[76 FR 4179, Jan. 24, 2011]

TABLE 3 TO SUBPART BBBBBB OF PART 63—APPLICABILITY OF GENERAL PROVISIONS

| Citation | Subject | Brief description | Applies to subpart BBBBBB |
|---|---|---|---|
| § 63.1 | Applicability | Initial applicability determination; applicability after standard established; permit requirements; extensions, notifications. | Yes, specific requirements given in § 63.11081. |
| § 63.1(c)(2) | Title V permit | Requirements for obtaining a title V permit from the applicable permitting authority. | Yes, § 63.11081(b) of subpart BBBBBB exempts identified area sources from the obligation to obtain title V operating permits. |
| § 63.2 | Definitions | Definitions for part 63 standards | Yes, additional definitions in § 63.11100. |
| § 63.3 | Units and Abbreviations | Units and abbreviations for part 63 standards | Yes. |
| § 63.4 | Prohibited Activities and Circumvention. | Prohibited activities; circumvention, severability | Yes. |
| § 63.5 | Construction/Reconstruction. | Applicability; applications; approvals | Yes. |
| § 63.6(a) | Compliance with Standards/Operation & Maintenance Applicability. | General Provisions apply unless compliance extension; General Provisions apply to area sources that become major. | Yes. |
| § 63.6(b)(1)–(4) | Compliance Dates for New and Reconstructed Sources. | Standards apply at effective date; 3 years after effective date; upon startup; 10 years after construction or reconstruction commences for CAA section 112(f). | Yes. |
| § 63.6(b)(5) | Notification | Must notify if commenced construction or reconstruction after proposal. | Yes. |
| § 63.6(b)(6) | [Reserved]. | | |
| § 63.6(b)(7) | Compliance Dates for New and Reconstructed Area Sources that Become Major. | Area sources that become major must comply with major source standards immediately upon becoming major, regardless of whether required to comply when they were an area source. | No. |
| § 63.6(c)(1)–(2) | Compliance Dates for Existing Sources. | Comply according to date in this subpart, which must be no later than 3 years after effective date; for CAA section 112(f) standards, comply within 90 days of effective date unless compliance extension. | No, § 63.11083 specifies the compliance dates. |
| § 63.6(c)(3)–(4) | [Reserved]. | | |

| Citation | Subject | Brief description | Applies to subpart BBBBBB |
|---|---|---|---|
| § 63.6(c)(5) | Compliance Dates for Existing Area Sources that Become Major. | Area sources that become major must comply with major source standards by date indicated in this subpart or by equivalent time period (e.g., 3 years). | No. |
| § 63.6(d) | [Reserved]. | | |
| 63.6(e)(1)(i) | General duty to minimize emissions. | Operate to minimize emissions at all times; information Administrator will use to determine if operation and maintenance requirements were met. | No. *See* § 63.11085 for general duty requirement. |
| 63.6(e)(1)(ii) | Requirement to correct malfunctions as soon as possible. | Owner or operator must correct malfunctions as soon as possible. | No. |
| § 63.6(e)(2) | [Reserved]. | | |
| § 63.6(e)(3) | Startup, Shutdown, and Malfunction (SSM) plan. | Requirement for SSM plan; content of SSM plan; actions during SSM. | No. |
| § 63.6(f)(1) | Compliance Except During SSM. | You must comply with emission standards at all times except during SSM. | No. |
| § 63.6(f)(2)–(3) | Methods for Determining Compliance. | Compliance based on performance test, operation and maintenance plans, records, inspection. | Yes. |
| § 63.6(g)(1)–(3) | Alternative Standard | Procedures for getting an alternative standard | Yes. |
| § 63.6(h)(1) | Compliance with Opacity/VE Standards. | You must comply with opacity/VE standards at all times except during SSM. | No. |
| § 63.6(h)(2)(i) | Determining Compliance with Opacity/VE Standards. | If standard does not State test method, use EPA Method 9 for opacity in appendix A of part 60 of this chapter and EPA Method 22 for VE in appendix A of part 60 of this chapter. | No. |
| § 63.6(h)(2)(ii) | [Reserved]. | | |
| § 63.6(h)(2)(iii) | Using Previous Tests to Demonstrate Compliance with Opacity/VE Standards. | Criteria for when previous opacity/VE testing can be used to show compliance with this subpart. | No. |
| § 63.6(h)(3) | [Reserved]. | | |
| § 63.6(h)(4) | Notification of Opacity/VE Observation Date. | Must notify Administrator of anticipated date of observation. | No. |
| § 63.6(h)(5)(i), (iii)–(v) | Conducting Opacity/VE Observations. | Dates and schedule for conducting opacity/VE observations. | No. |
| § 63.6(h) (5)(ii) | Opacity Test Duration and Averaging Times. | Must have at least 3 hours of observation with 30 6-minute averages. | No. |
| § 63.6(h)(6) | Records of Conditions During Opacity/VE Observations. | Must keep records available and allow Administrator to inspect. | No. |
| § 63.6(h)(7)(i) | Report Continuous Opacity Monitoring System (COMS) Monitoring Data from Performance Test. | Must submit COMS data with other performance test data. | No. |
| § 63.6(h)(7)(ii) | Using COMS Instead of EPA Method 9. | Can submit COMS data instead of EPA Method 9 results even if rule requires EPA Method 9 in appendix A of part 60 of this chapter, but must notify Administrator before performance test. | No. |
| § 63.6(h)(7)(iii) | Averaging Time for COMS During Performance Test. | To determine compliance, must reduce COMS data to 6-minute averages. | No. |
| § 63.6(h)(7)(iv) | COMS Requirements | Owner/operator must demonstrate that COMS performance evaluations are conducted according to § 63.8(e); COMS are properly maintained and operated according to § 63.8(c) and data quality as § 63.8(d). | No. |
| § 63.6(h)(7)(v) | Determining Compliance with Opacity/VE Standards. | COMS is probable but not conclusive evidence of compliance with opacity standard, even if EPA Method 9 observation shows otherwise. Requirements for COMS to be probable evidence-proper maintenance, meeting Performance Specification 1 in appendix B of part 60 of this chapter, and data have not been altered. | No. |

| Citation | Subject | Brief description | Applies to subpart BBBBBB |
|---|---|---|---|
| § 63.6(h)(8) | Determining Compliance with Opacity/VE Standards. | Administrator will use all COMS, EPA Method 9 (in appendix A of part 60 of this chapter), and EPA Method 22 (in appendix A of part 60 of this chapter) results, as well as information about operation and maintenance to determine compliance. | No. |
| § 63.6(h)(9) | Adjusted Opacity Standard. | Procedures for Administrator to adjust an opacity standard. | No. |
| § 63.6(i)(1)–(14) | Compliance Extension | Procedures and criteria for Administrator to grant compliance extension. | Yes. |
| § 63.6(j) | Presidential Compliance Exemption. | President may exempt any source from requirement to comply with this subpart. | Yes. |
| § 63.7(a)(2) | Performance Test Dates. | Dates for conducting initial performance testing; must conduct 180 days after compliance date. | Yes. |
| § 63.7(a)(3) | Section 114 Authority | Administrator may require a performance test under CAA section 114 at any time. | Yes. |
| § 63.7(b)(1) | Notification of Performance Test. | Must notify Administrator 60 days before the test. | Yes. |
| § 63.7(b)(2) | Notification of Rescheduling. | If have to reschedule performance test, must notify Administrator of rescheduled date as soon as practicable and without delay. | Yes. |
| § 63.7(c) | Quality Assurance (QA)/Test Plan. | Requirement to submit site-specific test plan 60 days before the test or on date Administrator agrees with; test plan approval procedures; performance audit requirements; internal and external QA procedures for testing. | Yes. |
| § 63.7(d) | Testing Facilities | Requirements for testing facilities | Yes. |
| 63.7(e)(1) | Conditions for Conducting Performance Tests. | Performance test must be conducted under representative conditions. | No, § 63.11092(g) specifies conditions for conducting performance tests. |
| § 63.7(e)(2) | Conditions for Conducting Performance Tests. | Must conduct according to this subpart and EPA test methods unless Administrator approves alternative. | Yes. |
| § 63.7(e)(3) | Test Run Duration | Must have three test runs of at least 1 hour each; compliance is based on arithmetic mean of three runs; conditions when data from an additional test run can be used. | Yes, except for testing conducted under § 63.11092(a). |
| § 63.7(f) | Alternative Test Method | Procedures by which Administrator can grant approval to use an intermediate or major change, or alternative to a test method. | Yes. |
| § 63.7(g) | Performance Test Data Analysis. | Must include raw data in performance test report; must submit performance test data 60 days after end of test with the notification of compliance status; keep data for 5 years. | Yes. |
| § 63.7(h) | Waiver of Tests | Procedures for Administrator to waive performance test. | Yes. |
| § 63.8(a)(1) | Applicability of Monitoring Requirements. | Subject to all monitoring requirements in standard. | Yes. |
| § 63.8(a)(2) | Performance Specifications. | Performance specifications in appendix B of 40 CFR part 60 apply. | Yes. |
| § 63.8(a)(3) | [Reserved]. | | |
| § 63.8(a)(4) | Monitoring of Flares | Monitoring requirements for flares in § 63.11 apply. | Yes. |
| § 63.8(b)(1) | Monitoring | Must conduct monitoring according to standard unless Administrator approves alternative. | Yes. |
| § 63.8(b)(2)–(3) | Multiple Effluents and Multiple Monitoring Systems. | Specific requirements for installing monitoring systems; must install on each affected source or after combined with another affected source before it is released to the atmosphere provided the monitoring is sufficient to demonstrate compliance with the standard; if more than one monitoring system on an emission point, must report all monitoring system results, unless one monitoring system is a backup. | Yes. |
| § 63.8(c)(1) | Monitoring System Operation and Maintenance. | Maintain monitoring system in a manner consistent with good air pollution control practices. | Yes. |
| § 63.8(c)(1)(i) | Operation and Maintenance of CMS. | Must maintain and operate each CMS as specified in § 63.6(e)(1). | No. |
| § 63.8(c)(1)(ii) | Operation and Maintenance of CMS. | Must keep parts for routine repairs readily available. | Yes. |

| Citation | Subject | Brief description | Applies to subpart BBBBBB |
|---|---|---|---|
| § 63.8(c)(1)(iii) | Operation and Maintenance of CMS. | Requirement to develop SSM Plan for CMS | No. |
| § 63.8(c) (2)–(8) | CMS Requirements | Must install to get representative emission or parameter measurements; must verify operational status before or at performance test. | Yes. |
| § 63.8(d) | CMS Quality Control | Requirements for CMS quality control, including calibration, etc.; must keep quality control plan on record for 5 years; keep old versions for 5 years after revisions. | No. |
| § 63.8(e) | CMS Performance Evaluation. | Notification, performance evaluation test plan, reports. | Yes. |
| § 63.8(f) (1)–(5) | Alternative Monitoring Method. | Procedures for Administrator to approve alternative monitoring. | Yes. |
| § 63.8(f)(6) | Alternative to Relative Accuracy Test. | Procedures for Administrator to approve alternative relative accuracy tests for CEMS. | Yes. |
| § 63.8(g) | Data Reduction | COMS 6-minute averages calculated over at least 36 evenly spaced data points; CEMS 1 hour averages computed over at least 4 equally spaced data points; data that cannot be used in average. | Yes. |
| § 63.9(a) | Notification Requirements. | Applicability and State delegation | Yes. |
| § 63.9(b)(1)–(2), (4)–(5) | Initial Notifications | Submit notification within 120 days after effective date, or no later than 120 days after the source becomes subject to this subpart, whichever is later; notification of intent to construct/reconstruct, notification of commencement of construction/reconstruction, notification of startup; contents of each. | Yes. |
| § 63.9(c) | Request for Compliance Extension. | Can request if cannot comply by date or if installed best available control technology or lowest achievable emission rate. | Yes. |
| § 63.9(d) | Notification of Special Compliance Requirements for New Sources. | For sources that commence construction between proposal and promulgation and want to comply 3 years after effective date. | Yes. |
| § 63.9(e) | Notification of Performance Test. | Notify Administrator 60 days prior | Yes. |
| § 63.9(f) | Notification of VE/Opacity Test. | Notify Administrator 30 days prior | No. |
| § 63.9(g) | Additional Notifications When Using CMS. | Notification of performance evaluation; notification about use of COMS data; notification that exceeded criterion for relative accuracy alternative. | Yes, however, there are no opacity standards. |
| § 63.9(h)(1)–(6) | Notification of Compliance Status. | Contents due 60 days after end of performance test or other compliance demonstration, except for opacity/VE, which are due 30 days after; when to submit to Federal vs. State authority. | Yes, except as specified in § 63.11095(a)(4); also, there are no opacity standards. |
| § 63.9(i) | Adjustment of Submittal Deadlines. | Procedures for Administrator to approve change when notifications must be submitted. | Yes. |
| § 63.9(j) | Change in Previous Information. | Must submit within 15 days after the change | Yes. |
| § 63.9(k) | Notifications | Electronic reporting procedures | Yes, only as specified by § 63.9(j). |
| § 63.10(a) | Record-keeping/Reporting. | Applies to all, unless compliance extension; when to submit to Federal vs. State authority; procedures for owners of more than one source. | Yes. |
| § 63.10(b)(1) | Record-keeping/Reporting. | General requirements; keep all records readily available; keep for 5 years. | Yes. |
| § 63.10(b)(2)(i) | Records related to SSM | Recordkeeping of occurrence and duration of startups and shutdowns. | No. |
| § 63.10(b)(2)(ii) | Records related to SSM | Recordkeeping of malfunctions | No. *See* § 63.11094(g) for recordkeeping of (1) occurrence and duration and (2) actions taken during malfunction. |
| § 63.10(b)(2)(iii) | Maintenance records | Recordkeeping of maintenance on air pollution control and monitoring equipment. | Yes. |
| § 63.10(b)(2)(iv) | Records Related to SSM. | Actions taken to minimize emissions during SSM. | No. |

| Citation | Subject | Brief description | Applies to subpart BBBBBB |
|---|---|---|---|
| § 63.10(b)(2)(v) | Records Related to SSM. | Actions taken to minimize emissions during SSM. | No. |
| § 63.10(b)(2)(vi)–(xi) | CMS Records | Malfunctions, inoperative, out-of-control periods | Yes. |
| § 63.10(b)(2)(xii) | Records | Records when under waiver | Yes. |
| § 63.10(b)(2)(xiii) | Records | Records when using alternative to relative accuracy test. | Yes. |
| § 63.10(b)(2)(xiv) | Records | All documentation supporting initial notification and notification of compliance status. | Yes. |
| § 63.10(b)(3) | Records | Applicability determinations | Yes. |
| § 63.10(c) | Records | Additional records for CMS | No. |
| § 63.10(d)(1) | General Reporting Requirements. | Requirement to report | Yes. |
| § 63.10(d)(2) | Report of Performance Test Results. | When to submit to Federal or State authority | Yes. |
| § 63.10(d)(3) | Reporting Opacity or VE Observations. | What to report and when | No. |
| § 63.10(d)(4) | Progress Reports | Must submit progress reports on schedule if under compliance extension. | Yes. |
| § 63.10(d)(5) | SSM Reports | Contents and submission | No. *See* § 63.11095(d) for malfunction reporting requirements. |
| § 63.10(e)(1)–(2) | Additional CMS Reports | Must report results for each CEMS on a unit; written copy of CMS performance evaluation; 2–3 copies of COMS performance evaluation. | No. |
| § 63.10(e)(3)(i)–(iii) | Reports | Schedule for reporting excess emissions | Yes, note that § 63.11095 specifies excess emission events for this subpart. |
| § 63.10(e)(3)(iv)–(v) | Excess Emissions Reports. | Requirement to revert to quarterly submission if there is an excess emissions and parameter monitor exceedances (now defined as deviations); provision to request semiannual reporting after compliance for 1 year; submit report by 30th day following end of quarter or calendar half; if there has not been an exceedance or excess emissions (now defined as deviations), report contents in a statement that there have been no deviations; must submit report containing all of the information in §§ 63.8(c)(7)–(8) and 63.10(c)(5)–(13). | Yes, § 63.11095 specifies excess emission events for this subpart. |
| § 63.10(e)(3)(vi)–(viii) | Excess Emissions Report and Summary Report. | Requirements for reporting excess emissions for CMS; requires all of the information in §§ 63.8(c)(7)–(8) and 63.10(c)(5)–(13). | Yes. |
| § 63.10(e)(4) | Reporting COMS Data | Must submit COMS data with performance test data. | Yes. |
| § 63.10(f) | Waiver for Recordkeeping/Reporting. | Procedures for Administrator to waive | Yes. |
| § 63.11(b) | Flares | Requirements for flares | Yes, the section references § 63.11(b). |
| § 63.12 | Delegation | State authority to enforce standards | Yes. |
| § 63.13 | Addresses | Addresses where reports, notifications, and requests are sent. | Yes. |
| § 63.14 | Incorporations by Reference. | Test methods incorporated by reference | Yes. |
| § 63.15 | Availability of Information. | Public and confidential information | Yes. |

[73 FR 1933, Jan. 10, 2008, as amended at 76 FR 4180, Jan. 24, 2011; 85 FR 73919, Nov. 19, 2020]

## Subpart CCCCCC—National Emission Standards for Hazardous Air Pollutants for Source Category: Gasoline Dispensing Facilities

SOURCE: 73 FR 1945, Jan. 10, 2008, unless otherwise noted.

WHAT THIS SUBPART COVERS

### §63.11110 What is the purpose of this subpart?

This subpart establishes national emission limitations and management practices for hazardous air pollutants (HAP) emitted from the loading of gasoline storage tanks at gasoline dispensing facilities (GDF). This subpart also establishes requirements to demonstrate compliance with the emission limitations and management practices.

### §63.11111 Am I subject to the requirements in this subpart?

(a) The affected source to which this subpart applies is each GDF that is located at an area source. The affected source includes each gasoline cargo tank during the delivery of product to a GDF and also includes each storage tank.

(b) If your GDF has a monthly throughput of less than 10,000 gallons of gasoline, you must comply with the requirements in §63.11116.

(c) If your GDF has a monthly throughput of 10,000 gallons of gasoline or more, you must comply with the requirements in §63.11117.

(d) If your GDF has a monthly throughput of 100,000 gallons of gasoline or more, you must comply with the requirements in §63.11118.

(e) An affected source shall, upon request by the Administrator, demonstrate that their monthly throughput is less than the 10,000-gallon or the 100,000-gallon threshold level, as applicable. For new or reconstructed affected sources, as specified in §63.11112(b) and (c), recordkeeping to document monthly throughput must begin upon startup of the affected source. For existing sources, as specified in §63.11112(d), recordkeeping to document monthly throughput must begin on January 10, 2008. For existing sources that are subject to this subpart only because they load gasoline into fuel tanks other than those in motor vehicles, as defined in §63.11132, recordkeeping to document monthly throughput must begin on January 24, 2011. Records required under this paragraph shall be kept for a period of 5 years.

(f) If you are an owner or operator of affected sources, as defined in paragraph (a) of this section, you are not required to obtain a permit under 40 CFR part 70 or 40 CFR part 71 as a result of being subject to this subpart. However, you must still apply for and obtain a permit under 40 CFR part 70 or 40 CFR part 71 if you meet one or more of the applicability criteria found in 40 CFR 70.3(a) and (b) or 40 CFR 71.3(a) and (b).

(g) The loading of aviation gasoline into storage tanks at airports, and the subsequent transfer of aviation gasoline within the airport, is not subject to this subpart.

(h) Monthly throughput is the total volume of gasoline loaded into, or dispensed from, all the gasoline storage tanks located at a single affected GDF. If an area source has two or more GDF at separate locations within the area source, each GDF is treated as a separate affected source.

(i) If your affected source's throughput ever exceeds an applicable throughput threshold, the affected source will remain subject to the requirements for sources above the threshold, even if the affected source throughput later falls below the applicable throughput threshold.

(j) The dispensing of gasoline from a fixed gasoline storage tank at a GDF into a portable gasoline tank for the on-site delivery and subsequent dispensing of the gasoline into the fuel tank of a motor vehicle or other gasoline-fueled engine or equipment used within the area source is only subject to §63.11116 of this subpart.

(k) For any affected source subject to the provisions of this subpart and another Federal rule, you may elect to comply only with the more stringent provisions of the applicable subparts. You must consider all provisions of the rules, including monitoring, recordkeeping, and reporting. You must identify the affected source and provisions with which you will comply in your

Notification of Compliance Status required under § 63.11124. You also must demonstrate in your Notification of Compliance Status that each provision with which you will comply is at least as stringent as the otherwise applicable requirements in this subpart. You are responsible for making accurate determinations concerning the more stringent provisions, and noncompliance with this rule is not excused if it is later determined that your determination was in error, and, as a result, you are violating this subpart. Compliance with this rule is your responsibility and the Notification of Compliance Status does not alter or affect that responsibility.

[73 FR 1945, Jan. 10, 2008, as amended at 76 FR 4181, Jan. 24, 2011]

### § 63.11112 What parts of my affected source does this subpart cover?

(a) The emission sources to which this subpart applies are gasoline storage tanks and associated equipment components in vapor or liquid gasoline service at new, reconstructed, or existing GDF that meet the criteria specified in § 63.11111. Pressure/Vacuum vents on gasoline storage tanks and the equipment necessary to unload product from cargo tanks into the storage tanks at GDF are covered emission sources. The equipment used for the refueling of motor vehicles is not covered by this subpart.

(b) An affected source is a new affected source if you commenced construction on the affected source after November 9, 2006, and you meet the applicability criteria in § 63.11111 at the time you commenced operation.

(c) An affected source is reconstructed if you meet the criteria for reconstruction as defined in § 63.2.

(d) An affected source is an existing affected source if it is not new or reconstructed.

### § 63.11113 When do I have to comply with this subpart?

(a) If you have a new or reconstructed affected source, you must comply with this subpart according to paragraphs (a)(1) and (2) of this section, except as specified in paragraph (d) of this section.

(1) If you start up your affected source before January 10, 2008, you must comply with the standards in this subpart no later than January 10, 2008.

(2) If you start up your affected source after January 10, 2008, you must comply with the standards in this subpart upon startup of your affected source.

(b) If you have an existing affected source, you must comply with the standards in this subpart no later than January 10, 2011.

(c) If you have an existing affected source that becomes subject to the control requirements in this subpart because of an increase in the monthly throughput, as specified in § 63.11111(c) or § 63.11111(d), you must comply with the standards in this subpart no later than 3 years after the affected source becomes subject to the control requirements in this subpart.

(d) If you have a new or reconstructed affected source and you are complying with Table 1 to this subpart, you must comply according to paragraphs (d)(1) and (2) of this section.

(1) If you start up your affected source from November 9, 2006 to September 23, 2008, you must comply no later than September 23, 2008.

(2) If you start up your affected source after September 23, 2008, you must comply upon startup of your affected source.

(e) The initial compliance demonstration test required under § 63.11120(a)(1) and (2) must be conducted as specified in paragraphs (e)(1) and (2) of this section.

(1) If you have a new or reconstructed affected source, you must conduct the initial compliance test upon installation of the complete vapor balance system.

(2) If you have an existing affected source, you must conduct the initial compliance test as specified in paragraphs (e)(2)(i) or (e)(2)(ii) of this section.

(i) For vapor balance systems installed on or before December 15, 2009, you must test no later than 180 days after the applicable compliance date specified in paragraphs (b) or (c) of this section.

(ii) For vapor balance systems installed after December 15, 2009, you

must test upon installation of the complete vapor balance system.

(f) If your GDF is subject to the control requirements in this subpart only because it loads gasoline into fuel tanks other than those in motor vehicles, as defined in § 63.11132, you must comply with the standards in this subpart as specified in paragraphs (f)(1) or (f)(2) of this section.

(1) If your GDF is an existing facility, you must comply by January 24, 2014.

(2) If your GDF is a new or reconstructed facility, you must comply by the dates specified in paragraphs (f)(2)(i) and (ii) of this section.

(i) If you start up your GDF after December 15, 2009, but before January 24, 2011, you must comply no later than January 24, 2011.

(ii) If you start up your GDF after January 24, 2011, you must comply upon startup of your GDF.

[73 FR 1945, Jan. 10, 2008, as amended at 73 FR 35944, June 25, 2008; 76 FR 4181, Jan. 24, 2011]

EMISSION LIMITATIONS AND MANAGEMENT PRACTICES

### § 63.11115 What are my general duties to minimize emissions?

Each owner or operator of an affected source under this subpart must comply with the requirements of paragraphs (a) and (b) of this section.

(a) You must, at all times, operate and maintain any affected source, including associated air pollution control equipment and monitoring equipment, in a manner consistent with safety and good air pollution control practices for minimizing emissions. Determination of whether such operation and maintenance procedures are being used will be based on information available to the Administrator which may include, but is not limited to, monitoring results, review of operation and maintenance procedures, review of operation and maintenance records, and inspection of the source.

(b) You must keep applicable records and submit reports as specified in § 63.11125(d) and § 63.11126(b).

[76 FR 4182, Jan. 24, 2011]

### § 63.11116 Requirements for facilities with monthly throughput of less than 10,000 gallons of gasoline.

(a) You must not allow gasoline to be handled in a manner that would result in vapor releases to the atmosphere for extended periods of time. Measures to be taken include, but are not limited to, the following:

(1) Minimize gasoline spills;

(2) Clean up spills as expeditiously as practicable;

(3) Cover all open gasoline containers and all gasoline storage tank fill-pipes with a gasketed seal when not in use;

(4) Minimize gasoline sent to open waste collection systems that collect and transport gasoline to reclamation and recycling devices, such as oil/water separators.

(b) You are not required to submit notifications or reports as specified in § 63.11125, § 63.11126, or subpart A of this part, but you must have records available within 24 hours of a request by the Administrator to document your gasoline throughput.

(c) You must comply with the requirements of this subpart by the applicable dates specified in § 63.11113.

(d) Portable gasoline containers that meet the requirements of 40 CFR part 59, subpart F, are considered acceptable for compliance with paragraph (a)(3) of this section.

[73 FR 1945, Jan. 10, 2008, as amended at 76 FR 4182, Jan. 24, 2011]

### § 63.11117 Requirements for facilities with monthly throughput of 10,000 gallons of gasoline or more.

(a) You must comply with the requirements in section § 63.11116(a).

(b) Except as specified in paragraph (c) of this section, you must only load gasoline into storage tanks at your facility by utilizing submerged filling, as defined in § 63.11132, and as specified in paragraphs (b)(1), (b)(2), or (b)(3) of this section. The applicable distances in paragraphs (b)(1) and (2) shall be measured from the point in the opening of the submerged fill pipe that is the greatest distance from the bottom of the storage tank.

(1) Submerged fill pipes installed on or before November 9, 2006, must be no more than 12 inches from the bottom of the tank.

(2) Submerged fill pipes installed after November 9, 2006, must be no more than 6 inches from the bottom of the tank.

(3) Submerged fill pipes not meeting the specifications of paragraphs (b)(1) or (b)(2) of this section are allowed if the owner or operator can demonstrate that the liquid level in the tank is always above the entire opening of the fill pipe. Documentation providing such demonstration must be made available for inspection by the Administrator's delegated representative during the course of a site visit.

(c) Gasoline storage tanks with a capacity of less than 250 gallons are not required to comply with the submerged fill requirements in paragraph (b) of this section, but must comply only with all of the requirements in § 63.11116.

(d) You must have records available within 24 hours of a request by the Administrator to document your gasoline throughput.

(e) You must submit the applicable notifications as required under § 63.11124(a).

(f) You must comply with the requirements of this subpart by the applicable dates contained in § 63.11113.

[73 FR 1945, Jan. 10, 2008, as amended at 73 FR 12276, Mar. 7, 2008; 76 FR 4182, Jan. 24, 2011]

### § 63.11118 Requirements for facilities with monthly throughput of 100,000 gallons of gasoline or more.

(a) You must comply with the requirements in §§ 63.11116(a) and 63.11117(b).

(b) Except as provided in paragraph (c) of this section, you must meet the requirements in either paragraph (b)(1) or paragraph (b)(2) of this section.

(1) Each management practice in Table 1 to this subpart that applies to your GDF.

(2) If, prior to January 10, 2008, you satisfy the requirements in both paragraphs (b)(2)(i) and (ii) of this section, you will be deemed in compliance with this subsection.

(i) You operate a vapor balance system at your GDF that meets the requirements of either paragraph (b)(2)(i)(A) or paragraph (b)(2)(i)(B) of this section.

(A) Achieves emissions reduction of at least 90 percent.

(B) Operates using management practices at least as stringent as those in Table 1 to this subpart.

(ii) Your gasoline dispensing facility is in compliance with an enforceable State, local, or tribal rule or permit that contains requirements of either paragraph (b)(2)(i)(A) or paragraph (b)(2)(i)(B) of this section.

(c) The emission sources listed in paragraphs (c)(1) through (3) of this section are not required to comply with the control requirements in paragraph (b) of this section, but must comply with the requirements in § 63.11117.

(1) Gasoline storage tanks with a capacity of less than 250 gallons that are constructed after January 10, 2008.

(2) Gasoline storage tanks with a capacity of less than 2,000 gallons that were constructed before January 10, 2008.

(3) Gasoline storage tanks equipped with floating roofs, or the equivalent.

(d) Cargo tanks unloading at GDF must comply with the management practices in Table 2 to this subpart.

(e) You must comply with the applicable testing requirements contained in § 63.11120.

(f) You must submit the applicable notifications as required under § 63.11124.

(g) You must keep records and submit reports as specified in §§ 63.11125 and 63.11126.

(h) You must comply with the requirements of this subpart by the applicable dates contained in § 63.11113.

[73 FR 1945, Jan. 10, 2008, as amended at 73 FR 12276, Mar. 7, 2008]

## TESTING AND MONITORING REQUIREMENTS

### § 63.11120 What testing and monitoring requirements must I meet?

(a) Each owner or operator, at the time of installation, as specified in § 63.11113(e), of a vapor balance system required under § 63.11118(b)(1), and every 3 years thereafter, must comply with the requirements in paragraphs (a)(1) and (2) of this section.

(1) You must demonstrate compliance with the leak rate and cracking pressure requirements, specified in

item 1(g) of Table 1 to this subpart, for pressure-vacuum vent valves installed on your gasoline storage tanks using the test methods identified in paragraph (a)(1)(i) or paragraph (a)(1)(ii) of this section.

(i) California Air Resources Board Vapor Recovery Test Procedure TP–201.1E,—Leak Rate and Cracking Pressure of Pressure/Vacuum Vent Valves, adopted October 8, 2003 (incorporated by reference, see §63.14).

(ii) Use alternative test methods and procedures in accordance with the alternative test method requirements in §63.7(f).

(2) You must demonstrate compliance with the static pressure performance requirement specified in item 1(h) of Table 1 to this subpart for your vapor balance system by conducting a static pressure test on your gasoline storage tanks using the test methods identified in paragraphs (a)(2)(i), (a)(2)(ii), or (a)(2)(iii) of this section.

(i) California Air Resources Board Vapor Recovery Test Procedure TP–201.3,—Determination of 2-Inch WC Static Pressure Performance of Vapor Recovery Systems of Dispensing Facilities, adopted April 12, 1996, and amended March 17, 1999 (incorporated by reference, see §63.14).

(ii) Use alternative test methods and procedures in accordance with the alternative test method requirements in §63.7(f).

(iii) Bay Area Air Quality Management District Source Test Procedure ST–30—Static Pressure Integrity Test—Underground Storage Tanks, adopted November 30, 1983, and amended December 21, 1994 (incorporated by reference, *see* §63.14).

(b) Each owner or operator choosing, under the provisions of §63.6(g), to use a vapor balance system other than that described in Table 1 to this subpart must demonstrate to the Administrator or delegated authority under paragraph §63.11131(a) of this subpart, the equivalency of their vapor balance system to that described in Table 1 to this subpart using the procedures specified in paragraphs (b)(1) through (3) of this section.

(1) You must demonstrate initial compliance by conducting an initial performance test on the vapor balance system to demonstrate that the vapor balance system achieves 95 percent reduction using the California Air Resources Board Vapor Recovery Test Procedure TP–201.1,—Volumetric Efficiency for Phase I Vapor Recovery Systems, adopted April 12, 1996, and amended February 1, 2001, and October 8, 2003, (incorporated by reference, see §63.14).

(2) You must, during the initial performance test required under paragraph (b)(1) of this section, determine and document alternative acceptable values for the leak rate and cracking pressure requirements specified in item 1(g) of Table 1 to this subpart and for the static pressure performance requirement in item 1(h) of Table 1 to this subpart.

(3) You must comply with the testing requirements specified in paragraph (a) of this section.

(c) Conduct of performance tests. Performance tests conducted for this subpart shall be conducted under such conditions as the Administrator specifies to the owner or operator based on representative performance (*i.e.*, performance based on normal operating conditions) of the affected source. Upon request, the owner or operator shall make available to the Administrator such records as may be necessary to determine the conditions of performance tests.

(d) Owners and operators of gasoline cargo tanks subject to the provisions of Table 2 to this subpart must conduct annual certification testing according to the vapor tightness testing requirements found in §63.11092(f).

[73 FR 1945, Jan. 10, 2008, as amended at 76 FR 4182, Jan. 24, 2011]

NOTIFICATIONS, RECORDS, AND REPORTS

### §63.11124 What notifications must I submit and when?

(a) Each owner or operator subject to the control requirements in §63.11117 must comply with paragraphs (a)(1) through (3) of this section.

(1) You must submit an Initial Notification that you are subject to this subpart by May 9, 2008, or no later than 120 days after the source becomes subject to this subpart, whichever is later, or at the time you become subject to the

control requirements in § 63.11117, unless you meet the requirements in paragraph (a)(3) of this section. If your affected source is subject to the control requirements in § 63.11117 only because it loads gasoline into fuel tanks other than those in motor vehicles, as defined in § 63.11132, you must submit the Initial Notification by May 24, 2011, or no later than 120 days after the source becomes subject to this subpart, whichever is later. The Initial Notification must contain the information specified in paragraphs (a)(1)(i) through (iii) of this section. The notification must be submitted to the applicable EPA Regional office and delegated state authority as specified in § 63.13.

(i) The name and address of the owner and the operator.

(ii) The address (i.e., physical location) of the GDF.

(iii) A statement that the notification is being submitted in response to this subpart and identifying the requirements in paragraphs (a) through (c) of § 63.11117 that apply to you.

(2) You must submit a Notification of Compliance Status to the applicable EPA Regional Office and the delegated State authority, as specified in § 63.13, within 60 days of the applicable compliance date specified in § 63.11113, unless you meet the requirements in paragraph (a)(3) of this section. The Notification of Compliance Status must be signed by a responsible official who must certify its accuracy, must indicate whether the source has complied with the requirements of this subpart, and must indicate whether the facilities' monthly throughput is calculated based on the volume of gasoline loaded into all storage tanks or on the volume of gasoline dispensed from all storage tanks. If your facility is in compliance with the requirements of this subpart at the time the Initial Notification required under paragraph (a)(1) of this section is due, the Notification of Compliance Status may be submitted in lieu of the Initial Notification provided it contains the information required under paragraph (a)(1) of this section.

(3) If, prior to January 10, 2008, you are operating in compliance with an enforceable State, local, or tribal rule or permit that requires submerged fill as specified in § 63.11117(b), you are not required to submit an Initial Notification or a Notification of Compliance Status under paragraph (a)(1) or paragraph (a)(2) of this section.

(b) Each owner or operator subject to the control requirements in § 63.11118 must comply with paragraphs (b)(1) through (5) of this section.

(1) You must submit an Initial Notification that you are subject to this subpart by May 9, 2008, or no later than 120 days after the source becomes subject to this subpart, whichever is later, or at the time you become subject to the control requirements in § 63.11118. If your affected source is subject to the control requirements in § 63.11118 only because it loads gasoline into fuel tanks other than those in motor vehicles, as defined in § 63.11132, you must submit the Initial Notification by May 24, 2011, or no later than 120 days after the source becomes subject to this subpart, whichever is later. The Initial Notification must contain the information specified in paragraphs (b)(1)(i) through (iii) of this section. The notification must be submitted to the applicable EPA Regional office and delegated state authority as specified in § 63.13.

(i) The name and address of the owner and the operator.

(ii) The address (i.e., physical location) of the GDF.

(iii) A statement that the notification is being submitted in response to this subpart and identifying the requirements in paragraphs (a) through (c) of § 63.11118 that apply to you.

(2) You must submit a Notification of Compliance Status to the applicable EPA Regional Office and the delegated State authority, as specified in § 63.13, in accordance with the schedule specified in § 63.9(h). The Notification of Compliance Status must be signed by a responsible official who must certify its accuracy, must indicate whether the source has complied with the requirements of this subpart, and must indicate whether the facility's throughput is determined based on the volume of gasoline loaded into all storage tanks or on the volume of gasoline dispensed from all storage tanks. If your facility is in compliance with the requirements of this subpart at the time the Initial Notification required

under paragraph (b)(1) of this section is due, the Notification of Compliance Status may be submitted in lieu of the Initial Notification provided it contains the information required under paragraph (b)(1) of this section.

(3) If, prior to January 10, 2008, you satisfy the requirements in both paragraphs (b)(3)(i) and (ii) of this section, you are not required to submit an Initial Notification or a Notification of Compliance Status under paragraph (b)(1) or paragraph (b)(2) of this subsection.

(i) You operate a vapor balance system at your gasoline dispensing facility that meets the requirements of either paragraphs (b)(3)(i)(A) or (b)(3)(i)(B) of this section.

(A) Achieves emissions reduction of at least 90 percent.

(B) Operates using management practices at least as stringent as those in Table 1 to this subpart.

(ii) Your gasoline dispensing facility is in compliance with an enforceable State, local, or tribal rule or permit that contains requirements of either paragraphs (b)(3)(i)(A) or (b)(3)(i)(B) of this section.

(4) You must submit a Notification of Performance Test, as specified in §63.9(e), prior to initiating testing required by §63.11120(a) and (b).

(5) You must submit additional notifications specified in §63.9, as applicable.

[73 FR 1945, Jan. 10, 2008, as amended at 73 FR 12276, Mar. 7, 2008; 76 FR 4182, Jan. 24, 2011; 85 FR 73919, Nov. 19, 2020]

### §63.11125 What are my recordkeeping requirements?

(a) Each owner or operator subject to the management practices in §63.11118 must keep records of all tests performed under §63.11120(a) and (b).

(b) Records required under paragraph (a) of this section shall be kept for a period of 5 years and shall be made available for inspection by the Administrator's delegated representatives during the course of a site visit.

(c) Each owner or operator of a gasoline cargo tank subject to the management practices in Table 2 to this subpart must keep records documenting vapor tightness testing for a period of 5 years. Documentation must include each of the items specified in §63.11094(b)(2)(i) through (viii). Records of vapor tightness testing must be retained as specified in either paragraph (c)(1) or paragraph (c)(2) of this section.

(1) The owner or operator must keep all vapor tightness testing records with the cargo tank.

(2) As an alternative to keeping all records with the cargo tank, the owner or operator may comply with the requirements of paragraphs (c)(2)(i) and (ii) of this section.

(i) The owner or operator may keep records of only the most recent vapor tightness test with the cargo tank, and keep records for the previous 4 years at their office or another central location.

(ii) Vapor tightness testing records that are kept at a location other than with the cargo tank must be instantly available (*e.g.*, via e-mail or facsimile) to the Administrator's delegated representative during the course of a site visit or within a mutually agreeable time frame. Such records must be an exact duplicate image of the original paper copy record with certifying signatures.

(d) Each owner or operator of an affected source under this subpart shall keep records as specified in paragraphs (d)(1) and (2) of this section.

(1) Records of the occurrence and duration of each malfunction of operation (*i.e.*, process equipment) or the air pollution control and monitoring equipment.

(2) Records of actions taken during periods of malfunction to minimize emissions in accordance with §63.11115(a), including corrective actions to restore malfunctioning process and air pollution control and monitoring equipment to its normal or usual manner of operation.

[73 FR 1945, Jan. 10, 2008, as amended at 76 FR 4183, Jan. 24, 2011]

### §63.11126 What are my reporting requirements?

(a) Each owner or operator subject to the management practices in §63.11118 shall report to the Administrator the results of all volumetric efficiency tests required under §63.11120(b). Reports submitted under this paragraph must be submitted within 180 days of

the completion of the performance testing.

(b) Each owner or operator of an affected source under this subpart shall report, by March 15 of each year, the number, duration, and a brief description of each type of malfunction which occurred during the previous calendar year and which caused or may have caused any applicable emission limitation to be exceeded. The report must also include a description of actions taken by an owner or operator during a malfunction of an affected source to minimize emissions in accordance with § 63.11115(a), including actions taken to correct a malfunction. No report is necessary for a calendar year in which no malfunctions occurred.

[76 FR 4183, Jan. 24, 2011]

OTHER REQUIREMENTS AND INFORMATION

### § 63.11130 What parts of the General Provisions apply to me?

Table 3 to this subpart shows which parts of the General Provisions apply to you.

### § 63.11131 Who implements and enforces this subpart?

(a) This subpart can be implemented and enforced by the U.S. EPA or a delegated authority such as the applicable State, local, or tribal agency. If the U.S. EPA Administrator has delegated authority to a State, local, or tribal agency, then that agency, in addition to the U.S. EPA, has the authority to implement and enforce this subpart. Contact the applicable U.S. EPA Regional Office to find out if implementation and enforcement of this subpart is delegated to a State, local, or tribal agency.

(b) In delegating implementation and enforcement authority of this subpart to a State, local, or tribal agency under subpart E of this part, the authorities contained in paragraph (c) of this section are retained by the Administrator of U.S. EPA and cannot be transferred to the State, local, or tribal agency.

(c) The authorities that cannot be delegated to State, local, or tribal agencies are as specified in paragraphs (c)(1) through (3) of this section.

(1) Approval of alternatives to the requirements in §§ 63.11116 through 63.11118 and 63.11120.

(2) Approval of major alternatives to test methods under § 63.7(e)(2)(ii) and (f), as defined in § 63.90, and as required in this subpart.

(3) Approval of major alternatives to recordkeeping and reporting under § 63.10(f), as defined in § 63.90, and as required in this subpart.

### § 63.11132 What definitions apply to this subpart?

As used in this subpart, all terms not defined herein shall have the meaning given them in the Clean Air Act (CAA), or in subparts A and BBBBBB of this part. For purposes of this subpart, definitions in this section supersede definitions in other parts or subparts.

*Dual-point vapor balance system* means a type of vapor balance system in which the storage tank is equipped with an entry port for a gasoline fill pipe and a separate exit port for a vapor connection.

*Gasoline* means any petroleum distillate or petroleum distillate/alcohol blend having a Reid vapor pressure of 27.6 kilopascals or greater, which is used as a fuel for internal combustion engines.

*Gasoline cargo tank* means a delivery tank truck or railcar which is loading or unloading gasoline, or which has loaded or unloaded gasoline on the immediately previous load.

*Gasoline dispensing facility (GDF)* means any stationary facility which dispenses gasoline into the fuel tank of a motor vehicle, motor vehicle engine, nonroad vehicle, or nonroad engine, including a nonroad vehicle or nonroad engine used solely for competition. These facilities include, but are not limited to, facilities that dispense gasoline into on- and off-road, street, or highway motor vehicles, lawn equipment, boats, test engines, landscaping equipment, generators, pumps, and other gasoline-fueled engines and equipment.

*Monthly throughput* means the total volume of gasoline that is loaded into, or dispensed from, all gasoline storage tanks at each GDF during a month. Monthly throughput is calculated by summing the volume of gasoline loaded

into, or dispensed from, all gasoline storage tanks at each GDF during the current day, plus the total volume of gasoline loaded into, or dispensed from, all gasoline storage tanks at each GDF during the previous 364 days, and then dividing that sum by 12.

*Motor vehicle* means any self-propelled vehicle designed for transporting persons or property on a street or highway.

*Nonroad engine* means an internal combustion engine (including the fuel system) that is not used in a motor vehicle or a vehicle used solely for competition, or that is not subject to standards promulgated under section 7411 of this title or section 7521 of this title.

*Nonroad vehicle* means a vehicle that is powered by a nonroad engine, and that is not a motor vehicle or a vehicle used solely for competition.

*Submerged filling* means, for the purposes of this subpart, the filling of a gasoline storage tank through a submerged fill pipe whose discharge is no more than the applicable distance specified in § 63.11117(b) from the bottom of the tank. Bottom filling of gasoline storage tanks is included in this definition.

*Vapor balance system* means a combination of pipes and hoses that create a closed system between the vapor spaces of an unloading gasoline cargo tank and a receiving storage tank such that vapors displaced from the storage tank are transferred to the gasoline cargo tank being unloaded.

*Vapor-tight* means equipment that allows no loss of vapors. Compliance with vapor-tight requirements can be determined by checking to ensure that the concentration at a potential leak source is not equal to or greater than 100 percent of the Lower Explosive Limit when measured with a combustible gas detector, calibrated with propane, at a distance of 1 inch from the source.

*Vapor-tight gasoline cargo tank* means a gasoline cargo tank which has demonstrated within the 12 preceding months that it meets the annual certification test requirements in § 63.11092(f) of this part.

[73 FR 1945, Jan. 10, 2008, as amended at 76 FR 4183, Jan. 24, 2011]

TABLE 1 TO SUBPART CCCCCC OF PART 63—APPLICABILITY CRITERIA AND MANAGEMENT PRACTICES FOR GASOLINE DISPENSING FACILITIES WITH MONTHLY THROUGHPUT OF 100,000 GALLONS OF GASOLINE OR MORE[1]

| If you own or operate | Then you must |
|---|---|
| 1. A new, reconstructed, or existing GDF subject to § 63.11118. | Install and operate a vapor balance system on your gasoline storage tanks that meets the design criteria in paragraphs (a) through (h).<br>(a) All vapor connections and lines on the storage tank shall be equipped with closures that seal upon disconnect.<br>(b) The vapor line from the gasoline storage tank to the gasoline cargo tank shall be vapor-tight, as defined in § 63.11132.<br>(c) The vapor balance system shall be designed such that the pressure in the tank truck does not exceed 18 inches water pressure or 5.9 inches water vacuum during product transfer.<br>(d) The vapor recovery and product adaptors, and the method of connection with the delivery elbow, shall be designed so as to prevent the overtightening or loosening of fittings during normal delivery operations.<br>(e) If a gauge well separate from the fill tube is used, it shall be provided with a submerged drop tube that extends the same distance from the bottom of the storage tank as specified in § 63.11117(b).<br>(f) Liquid fill connections for all systems shall be equipped with vapor-tight caps.<br>(g) Pressure/vacuum (PV) vent valves shall be installed on the storage tank vent pipes. The pressure specifications for PV vent valves shall be: a positive pressure setting of 2.5 to 6.0 inches of water and a negative pressure setting of 6.0 to 10.0 inches of water. The total leak rate of all PV vent valves at an affected facility, including connections, shall not exceed 0.17 cubic foot per hour at a pressure of 2.0 inches of water and 0.63 cubic foot per hour at a vacuum of 4 inches of water.<br>(h) The vapor balance system shall be capable of meeting the static pressure performance requirement of the following equation:<br>$Pf = 2e^{-500.887/v}$<br>Where: |

| If you own or operate | Then you must |
|---|---|
| | Pf = Minimum allowable final pressure, inches of water.<br>v = Total ullage affected by the test, gallons.<br>e = Dimensionless constant equal to approximately 2.718.<br>2 = The initial pressure, inches water. |
| 2. A new or reconstructed GDF, or any storage tank(s) constructed after November 9, 2006, at an existing affected facility subject to § 63.11118. | Equip your gasoline storage tanks with a dual-point vapor balance system, as defined in § 63.11132, and comply with the requirements of item 1 in this Table. |

[1] The management practices specified in this Table are not applicable if you are complying with the requirements in § 63.11118(b)(2), except that if you are complying with the requirements in § 63.11118(b)(2)(i)(B), you must operate using management practices at least as stringent as those listed in this Table.

[73 FR 1945, Jan. 10, 2008, as amended at 73 FR 35944, June 25, 2008; 76 FR 4184, Jan. 24, 2011]

TABLE 2 TO SUBPART CCCCCC OF PART 63—APPLICABILITY CRITERIA AND MANAGEMENT PRACTICES FOR GASOLINE CARGO TANKS UNLOADING AT GASOLINE DISPENSING FACILITIES WITH MONTHLY THROUGHPUT OF 100,000 GALLONS OF GASOLINE OR MORE

| If you own or operate | Then you must |
|---|---|
| A gasoline cargo tank | Not unload gasoline into a storage tank at a GDF subject to the control requirements in this subpart unless the following conditions are met:<br>(i) All hoses in the vapor balance system are properly connected,<br>(ii) The adapters or couplers that attach to the vapor line on the storage tank have closures that seal upon disconnect,<br>(iii) All vapor return hoses, couplers, and adapters used in the gasoline delivery are vapor-tight,<br>(iv) All tank truck vapor return equipment is compatible in size and forms a vapor-tight connection with the vapor balance equipment on the GDF storage tank, and<br>(v) All hatches on the tank truck are closed and securely fastened.<br>(vi) The filling of storage tanks at GDF shall be limited to unloading from vapor-tight gasoline cargo tanks. Documentation that the cargo tank has met the specifications of EPA Method 27 shall be carried with the cargo tank, as specified in § 63.11125(c). |

[73 FR 1945, Jan. 10, 2008, as amended at 76 FR 4184, Jan. 24, 2011]

TABLE 3 TO SUBPART CCCCCC OF PART 63—APPLICABILITY OF GENERAL PROVISIONS

| Citation | Subject | Brief description | Applies to subpart CCCCCC |
|---|---|---|---|
| § 63.1 | Applicability | Initial applicability determination; applicability after standard established; permit requirements; extensions, notifications. | Yes, specific requirements given in § 63.11111. |
| § 63.1(c)(2) | Title V Permit | Requirements for obtaining a title V permit from the applicable permitting authority. | Yes, § 63.11111(f) of subpart CCCCCC exempts identified area sources from the obligation to obtain title V operating permits. |
| § 63.2 | Definitions | Definitions for part 63 standards | Yes, additional definitions in § 63.11132. |
| § 63.3 | Units and Abbreviations | Units and abbreviations for part 63 standards | Yes. |
| § 63.4 | Prohibited Activities and Circumvention. | Prohibited activities; Circumvention, severability | Yes. |
| § 63.5 | Construction/Reconstruction. | Applicability; applications; approvals | Yes, except that these notifications are not required for facilities subject to § 63.11116 |
| § 63.6(a) | Compliance with Standards/Operation & Maintenance—Applicability. | General Provisions apply unless compliance extension; General Provisions apply to area sources that become major. | Yes. |
| § 63.6(b)(1)–(4) | Compliance Dates for New and Reconstructed Sources. | Standards apply at effective date; 3 years after effective date; upon startup; 10 years after construction or reconstruction commences for CAA section 112(f). | Yes. |
| § 63.6(b)(5) | Notification | Must notify if commenced construction or reconstruction after proposal. | Yes. |
| § 63.6(b)(6) | [Reserved]. | | |

| Citation | Subject | Brief description | Applies to subpart CCCCCC |
|---|---|---|---|
| § 63.6(b)(7) | Compliance Dates for New and Reconstructed Area Sources That Become Major. | Area sources that become major must comply with major source standards immediately upon becoming major, regardless of whether required to comply when they were an area source. | No. |
| § 63.6(c)(1)–(2) | Compliance Dates for Existing Sources. | Comply according to date in this subpart, which must be no later than 3 years after effective date; for CAA section 112(f) standards, comply within 90 days of effective date unless compliance extension. | No, § 63.11113 specifies the compliance dates. |
| § 63.6(c)(3)–(4) | [Reserved]. | | |
| § 63.6(c)(5) | Compliance Dates for Existing Area Sources That Become Major. | Area sources That become major must comply with major source standards by date indicated in this subpart or by equivalent time period (e.g., 3 years). | No. |
| § 63.6(d) | [Reserved]. | | |
| 63.6(e)(1)(i) | General duty to minimize emissions. | Operate to minimize emissions at all times; information Administrator will use to determine if operation and maintenance requirements were met. | No. *See* § 63.11115 for general duty requirement. |
| 63.6(e)(1)(ii) | Requirement to correct malfunctions ASAP. | Owner or operator must correct malfunctions as soon as possible. | No. |
| § 63.6(e)(2) | [Reserved]. | | |
| § 63.6(e)(3) | Startup, Shutdown, and Malfunction (SSM) Plan. | Requirement for SSM plan; content of SSM plan; actions during SSM. | No. |
| § 63.6(f)(1) | Compliance Except During SSM. | You must comply with emission standards at all times except during SSM. | No. |
| § 63.6(f)(2)–(3) | Methods for Determining Compliance. | Compliance based on performance test, operation and maintenance plans, records, inspection. | Yes. |
| § 63.6(g)(1)–(3) | Alternative Standard | Procedures for getting an alternative standard | Yes. |
| § 63.6(h)(1) | Compliance with Opacity/Visible Emission (VE) Standards. | You must comply with opacity/VE standards at all times except during SSM. | No. |
| § 63.6(h)(2)(i) | Determining Compliance with Opacity/VE Standards. | If standard does not State test method, use EPA Method 9 for opacity in appendix A of part 60 of this chapter and EPA Method 22 for VE in appendix A of part 60 of this chapter. | No. |
| § 63.6(h)(2)(ii) | [Reserved]. | | |
| § 63.6(h)(2)(iii) | Using Previous Tests To Demonstrate Compliance With Opacity/VE Standards. | Criteria for when previous opacity/VE testing can be used to show compliance with this subpart. | No. |
| § 63.6(h)(3) | [Reserved]. | | |
| § 63.6(h)(4) | Notification of Opacity/VE Observation Date. | Must notify Administrator of anticipated date of observation. | No. |
| § 63.6(h)(5)(i), (iii)–(v) | Conducting Opacity/VE Observations. | Dates and schedule for conducting opacity/VE observations. | No. |
| § 63.6(h)(5)(ii) | Opacity Test Duration and Averaging Times. | Must have at least 3 hours of observation with 30 6-minute averages. | No. |
| § 63.6(h)(6) | Records of Conditions During Opacity/VE Observations. | Must keep records available and allow Administrator to inspect. | No. |
| § 63.6(h)(7)(i) | Report Continuous Opacity Monitoring System (COMS) Monitoring Data From Performance Test. | Must submit COMS data with other performance test data. | No. |
| § 63.6(h)(7)(ii) | Using COMS Instead of EPA Method 9. | Can submit COMS data instead of EPA Method 9 results even if rule requires EPA Method 9 in appendix A of part 60 of this chapter, but must notify Administrator before performance test. | No. |
| § 63.6(h)(7)(iii) | Averaging Time for COMS During Performance Test. | To determine compliance, must reduce COMS data to 6-minute averages. | No. |
| § 63.6(h)(7)(iv) | COMS Requirements | Owner/operator must demonstrate that COMS performance evaluations are conducted according to § 63.8(e); COMS are properly maintained and operated according to § 63.8(c) and data quality as § 63.8(d). | No. |

| Citation | Subject | Brief description | Applies to subpart CCCCCC |
|---|---|---|---|
| § 63.6(h)(7)(v) | Determining Compliance with Opacity/VE Standards. | COMS is probable but not conclusive evidence of compliance with opacity standard, even if EPA Method 9 observation shows otherwise. Requirements for COMS to be probable evidence-proper maintenance, meeting Performance Specification 1 in appendix B of part 60 of this chapter, and data have not been altered. | No. |
| § 63.6(h)(8) | Determining Compliance with Opacity/VE Standards. | Administrator will use all COMS, EPA Method 9 (in appendix A of part 60 of this chapter), and EPA Method 22 (in appendix A of part 60 of this chapter) results, as well as information about operation and maintenance to determine compliance. | No. |
| § 63.6(h)(9) | Adjusted Opacity Standard. | Procedures for Administrator to adjust an opacity standard. | No. |
| § 63.6(i)(1)–(14) | Compliance Extension | Procedures and criteria for Administrator to grant compliance extension. | Yes. |
| § 63.6(j) | Presidential Compliance Exemption. | President may exempt any source from requirement to comply with this subpart. | Yes. |
| § 63.7(a)(2) | Performance Test Dates. | Dates for conducting initial performance testing; must conduct 180 days after compliance date. | Yes. |
| § 63.7(a)(3) | CAA Section 114 Authority. | Administrator may require a performance test under CAA section 114 at any time. | Yes. |
| § 63.7(b)(1) | Notification of Performance Test. | Must notify Administrator 60 days before the test. | Yes. |
| § 63.7(b)(2) | Notification of Rescheduling. | If have to reschedule performance test, must notify Administrator of rescheduled date as soon as practicable and without delay. | Yes. |
| § 63.7(c) | Quality Assurance (QA)/Test Plan. | Requirement to submit site-specific test plan 60 days before the test or on date Administrator agrees with; test plan approval procedures; performance audit requirements; internal and external QA procedures for testing. | Yes. |
| § 63.7(d) | Testing Facilities | Requirements for testing facilities | Yes. |
| 63.7(e)(1) | Conditions for Conducting Performance Tests. | Performance test must be conducted under representative conditions. | No, § 63.11120(c) specifies conditions for conducting performance tests. |
| § 63.7(e)(2) | Conditions for Conducting Performance Tests. | Must conduct according to this subpart and EPA test methods unless Administrator approves alternative. | Yes. |
| § 63.7(e)(3) | Test Run Duration | Must have three test runs of at least 1 hour each; compliance is based on arithmetic mean of three runs; conditions when data from an additional test run can be used. | Yes. |
| § 63.7(f) | Alternative Test Method | Procedures by which Administrator can grant approval to use an intermediate or major change, or alternative to a test method. | Yes. |
| § 63.7(g) | Performance Test Data Analysis. | Must include raw data in performance test report; must submit performance test data 60 days after end of test with the Notification of Compliance Status; keep data for 5 years. | Yes. |
| § 63.7(h) | Waiver of Tests | Procedures for Administrator to waive performance test. | Yes. |
| § 63.8(a)(1) | Applicability of Monitoring Requirements. | Subject to all monitoring requirements in standard. | Yes. |
| § 63.8(a)(2) | Performance Specifications. | Performance Specifications in appendix B of 40 CFR part 60 apply. | Yes. |
| § 63.8(a)(3) | [Reserved]. | | |
| § 63.8(a)(4) | Monitoring of Flares | Monitoring requirements for flares in § 63.11 apply. | Yes. |
| § 63.8(b)(1) | Monitoring | Must conduct monitoring according to standard unless Administrator approves alternative. | Yes. |

| Citation | Subject | Brief description | Applies to subpart CCCCCC |
|---|---|---|---|
| § 63.8(b)(2)–(3) | Multiple Effluents and Multiple Monitoring Systems. | Specific requirements for installing monitoring systems; must install on each affected source or after combined with another affected source before it is released to the atmosphere provided the monitoring is sufficient to demonstrate compliance with the standard; if more than one monitoring system on an emission point, must report all monitoring system results, unless one monitoring system is a backup. | No. |
| § 63.8(c)(1) | Monitoring System Operation and Maintenance. | Maintain monitoring system in a manner consistent with good air pollution control practices. | No. |
| § 63.8(c)(1)(i)–(iii) | Operation and Maintenance of Continuous Monitoring Systems (CMS). | Must maintain and operate each CMS as specified in § 63.6(e)(1); must keep parts for routine repairs readily available; must develop a written SSM plan for CMS, as specified in § 63.6(e)(3). | No. |
| § 63.8(c)(2)–(8) | CMS Requirements | Must install to get representative emission or parameter measurements; must verify operational status before or at performance test. | No. |
| § 63.8(d) | CMS Quality Control | Requirements for CMS quality control, including calibration, etc.; must keep quality control plan on record for 5 years; keep old versions for 5 years after revisions. | No. |
| § 63.8(e) | CMS Performance Evaluation. | Notification, performance evaluation test plan, reports. | No. |
| § 63.8(f)(1)–(5) | Alternative Monitoring Method. | Procedures for Administrator to approve alternative monitoring. | No. |
| § 63.8(f)(6) | Alternative to Relative Accuracy Test. | Procedures for Administrator to approve alternative relative accuracy tests for continuous emissions monitoring system (CEMS). | No. |
| § 63.8(g) | Data Reduction | COMS 6-minute averages calculated over at least 36 evenly spaced data points; CEMS 1 hour averages computed over at least 4 equally spaced data points; data that cannot be used in average. | No. |
| § 63.9(a) | Notification Requirements. | Applicability and State delegation | Yes. |
| § 63.9(b)(1)–(2), (4)–(5) | Initial Notifications | Submit notification within 120 days after effective date, or no later than 120 days after the source becomes subject to this subpart, whichever is later; notification of intent to construct/reconstruct, notification of commencement of construction/reconstruction, notification of startup; contents of each. | Yes. |
| § 63.9(c) | Request for Compliance Extension. | Can request if cannot comply by date or if installed best available control technology or lowest achievable emission rate. | Yes. |
| § 63.9(d) | Notification of Special Compliance Requirements for New Sources. | For sources that commence construction between proposal and promulgation and want to comply 3 years after effective date. | Yes. |
| § 63.9(e) | Notification of Performance Test. | Notify Administrator 60 days prior | Yes. |
| § 63.9(f) | Notification of VE/Opacity Test. | Notify Administrator 30 days prior | No. |
| § 63.9(g) | Additional Notifications when Using CMS. | Notification of performance evaluation; notification about use of COMS data; notification that exceeded criterion for relative accuracy alternative. | Yes, however, there are no opacity standards. |
| § 63.9(h)(1)–(6) | Notification of Compliance Status. | Contents due 60 days after end of performance test or other compliance demonstration, except for opacity/VE, which are due 30 days after; when to submit to Federal vs. State authority. | Yes, however, there are no opacity standards. |
| § 63.9(i) | Adjustment of Submittal Deadlines. | Procedures for Administrator to approve change when notifications must be submitted. | Yes. |
| § 63.9(j) | Change in Previous Information. | Must submit within 15 days after the change | Yes. |
| § 63.9(k) | Notifications | Electronic reporting procedures | Yes, only as specified in § 63.9(j). |

| Citation | Subject | Brief description | Applies to subpart CCCCCC |
|---|---|---|---|
| § 63.10(a) | Recordkeeping/Reporting. | Applies to all, unless compliance extension; when to submit to Federal vs. State authority; procedures for owners of more than one source. | Yes. |
| § 63.10(b)(1) | Recordkeeping/Reporting. | General requirements; keep all records readily available; keep for 5 years. | Yes. |
| § 63.10(b)(2)(i) | Records related to SSM | Recordkeeping of occurrence and duration of startups and shutdowns. | No. |
| § 63.10(b)(2)(ii) | Records related to SSM | Recordkeeping of malfunctions | No. *See* § 63.11125(d) for recordkeeping of (1) occurrence and duration and (2) actions taken during malfunction. |
| § 63.10(b)(2)(iii) | Maintenance records | Recordkeeping of maintenance on air pollution control and monitoring equipment. | Yes. |
| § 63.10(b)(2)(iv) | Records Related to SSM. | Actions taken to minimize emissions during SSM. | No. |
| § 63.10(b)(2)(v) | Records Related to SSM. | Actions taken to minimize emissions during SSM. | No. |
| § 63.10(b)(2)(vi)–(xi) | CMS Records | Malfunctions, inoperative, out-of-control periods | No. |
| § 63.10(b)(2)(xii) | Records | Records when under waiver | Yes. |
| § 63.10(b)(2)(xiii) | Records | Records when using alternative to relative accuracy test. | Yes. |
| § 63.10(b)(2)(xiv) | Records | All documentation supporting Initial Notification and Notification of Compliance Status. | Yes. |
| § 63.10(b)(3) | Records | Applicability determinations | Yes. |
| § 63.10(c) | Records | Additional records for CMS | No. |
| § 63.10(d)(1) | General Reporting Requirements. | Requirement to report | Yes. |
| § 63.10(d)(2) | Report of Performance Test Results. | When to submit to Federal or State authority | Yes. |
| § 63.10(d)(3) | Reporting Opacity or VE Observations. | What to report and when | No. |
| § 63.10(d)(4) | Progress Reports | Must submit progress reports on schedule if under compliance extension. | Yes. |
| § 63.10(d)(5) | SSM Reports | Contents and submission | No. *See* § 63.11126(b) for malfunction reporting requirements. |
| § 63.10(e)(1)–(2) | Additional CMS Reports | Must report results for each CEMS on a unit; written copy of CMS performance evaluation; two-three copies of COMS performance evaluation. | No. |
| § 63.10(e)(3)(i)–(iii) | Reports | Schedule for reporting excess emissions | No. |
| § 63.10(e)(3)(iv)–(v) | Excess Emissions Reports. | Requirement to revert to quarterly submission if there is an excess emissions and parameter monitor exceedances (now defined as deviations); provision to request semiannual reporting after compliance for 1 year; submit report by 30th day following end of quarter or calendar half; if there has not been an exceedance or excess emissions (now defined as deviations), report contents in a statement that there have been no deviations; must submit report containing all of the information in §§ 63.8(c)(7)–(8) and 63.10(c)(5)–(13). | No. |
| § 63.10(e)(3)(iv)–(v) | Excess Emissions Reports. | Requirement to revert to quarterly submission if there is an excess emissions and parameter monitor exceedances (now defined as deviations); provision to request semiannual reporting after compliance for 1 year; submit report by 30th day following end of quarter or calendar half; if there has not been an exceedance or excess emissions (now defined as deviations), report contents in a statement that there have been no deviations; must submit report containing all of the information in §§ 63.8(c)(7)–(8) and 63.10(c)(5)–(13). | No, § 63.11130(K) specifies excess emission events for this subpart. |
| § 63.10(e)(3)(vi)–(viii) | Excess Emissions Report and Summary Report. | Requirements for reporting excess emissions for CMS; requires all of the information in §§ 63.10(c)(5)–(13) and 63.8(c)(7)–(8). | No. |
| § 63.10(e)(4) | Reporting COMS Data | Must submit COMS data with performance test data. | No. |

| Citation | Subject | Brief description | Applies to subpart CCCCCC |
|---|---|---|---|
| §63.10(f) | Waiver for Recordkeeping/Reporting. | Procedures for Administrator to waive | Yes. |
| §63.11(b) | Flares | Requirements for flares | No. |
| §63.12 | Delegation | State authority to enforce standards | Yes. |
| §63.13 | Addresses | Addresses where reports, notifications, and requests are sent. | Yes. |
| §63.14 | Incorporations by Reference. | Test methods incorporated by reference | Yes. |
| §63.15 | Availability of Information. | Public and confidential information | Yes. |

[73 FR 1945, Jan. 10, 2008, as amended at 76 FR 4184, Jan. 24, 2011; 85 FR 73919, Nov. 19, 2020]

## Subpart DDDDDD—National Emission Standards for Hazardous Air Pollutants for Polyvinyl Chloride and Copolymers Production Area Sources

SOURCE: 72 FR 2943, Jan. 23, 2007, unless otherwise noted.

APPLICABILITY AND COMPLIANCE DATES

### §63.11140 Am I subject to this subpart?

(a) On or before April 17, 2012, you are subject to this subpart if you own or operate a plant specified in §61.61(c) of this chapter that produces polyvinyl chloride (PVC) or copolymers and is an area source of hazardous air pollutant (HAP) emissions. After April 17, 2012, you are subject to the requirements in this subpart if you own or operate one or more polyvinyl chloride and copolymers process units (PVCPU), as defined in §63.12005, that are located at, or are part of, an area source of HAP.

(b) On or before April 17, 2012, this subpart applies to each new or existing affected source. The affected source is the collection of all equipment and activities in vinyl chloride service necessary to produce PVC and copolymers. An affected source does not include portions of your PVC and copolymers production operations that meet the criteria in §61.60(b) or (c) of this chapter. After April 17, 2012, this subpart applies to each polyvinyl chloride and copolymers production affected source. The polyvinyl chloride and copolymers production affected source is the facility-wide collection of PVCPU, storage vessels, heat exchange systems, surge control vessels, and wastewater and process wastewater treatment systems that are associated with producing polyvinyl chloride and copolymers.

(1) An affected source is existing if you commenced construction or reconstruction of the affected source before October 6, 2006.

(i) You must meet the applicable requirements of §§63.11142(a), 63.11143(a) and (b), 63.11144(a) and 63.11145 for existing affected sources.

(ii) You must achieve compliance by the date specified in §63.11141(a).

(iii) You must meet the applicable requirements of §§63.11142(b) through (f), 63.11143(c), 63.11144(b) and 63.11145 for existing affected sources by the compliance date specified in §63.11141(c), after which time you are no longer subject to the requirements listed in paragraphs (b)(1)(i) and (ii) of this section.

(2) An affected source is new if you commenced construction or reconstruction of the affected source between October 6, 2006, and May 20, 2011.

(i) You must meet the applicable requirements of §§63.11142(a), 63.11143(a) and (b), 63.11144(a) and 63.11145 for new affected sources.

(ii) You must achieve compliance by the date specified in §63.11141(b).

(3) If you are a new affected source as specified in paragraph (b)(2) of this section that commenced construction or reconstruction between October 6, 2006, and May 20, 2011, then after April 17, 2012, you are considered an existing affected source.

(i) You must meet the applicable requirements of §§63.11142(b) through (f), 63.11143(c), 63.11144(b) and 63.11145 for existing affected sources.

(ii) You must achieve compliance by the date specified in §63.11141(d), after which time you are no longer subject

to paragraphs (b)(2)(i) and (ii) of this section.

(4) An affected source is new if you commenced construction or reconstruction of the affected source after May 20, 2011.

(i) You must meet the applicable requirements of §§ 63.11142(b) through (f), 63.11143(c), 63.11144(b), and 63.11145 for new affected sources.

(ii) You must achieve compliance by the date specified in § 63.11141(e).

(iii) If components of an existing affected source are replaced such that the replacement meets the definition of reconstruction in § 63.2 and the reconstruction commenced after May 20, 2011, then the existing affected source becomes a reconstructed source and is subject to the relevant standards for a new affected source. The reconstructed source must comply with the requirements of paragraph (b)(4)(i) of this section for a new affected source upon initial startup of the reconstructed source or by April 17, 2012, whichever is later.

(c) This subpart does not apply to research and development facilities, as defined in section 112(c)(7) of the Clean Air Act. After April 17, 2012, the requirements of this subpart also do not apply to chemical manufacturing process units, as defined in § 63.101, that produce vinyl chloride monomer or other raw materials used in the production of polyvinyl chloride and copolymers.

(d) You are exempt from the obligation to obtain a permit under 40 CFR part 70 or 40 CFR part 71, provided you are not otherwise required by law to obtain a permit under § 70.3(a) or § 71.3(a). Notwithstanding the previous sentence, you must continue to comply with the provisions of this subpart.

(e) After the applicable compliance date specified in § 63.11141(c), (d) or (e), an affected source that is also subject to the provisions of 40 CFR part 61, subpart F, is required to comply with the provisions of this subpart and no longer has to comply with 40 CFR part 61, subpart F.

(f) After the applicable compliance date specified in § 63.11141(c), (d) or (e), an affected source that is also subject to the provisions of other 40 CFR part 60 or 40 CFR part 63 subparts is required to comply with this subpart and any other applicable 40 CFR part 60 and 40 CFR part 63 subparts.

[77 FR 22904, Apr. 17, 2012]

### § 63.11141 What are my compliance dates?

(a) If you own or operate an existing affected source as specified in § 63.11140(b)(1), then you must achieve compliance with the applicable provisions in this subpart specified in § 63.11140(b)(1)(i) by January 23, 2007.

(b) If you own or operate a new affected source as specified in § 63.11140(b)(2), then you must achieve compliance with the applicable provisions in this subpart as specified in § 63.11140(b)(2)(i) by the dates in paragraphs (b)(1) or (2) of this section.

(1) If you start up a new affected source on or before January 23, 2007, you must achieve compliance with the applicable provisions in this subpart not later than January 23, 2007.

(2) If you start up a new affected source after January 23, 2007, but before or on May 20, 2011, then you must achieve compliance with the provisions in this subpart upon startup of your affected source.

(c) If you own or operate an existing affected source as specified in § 63.11140(b)(1), then you must achieve compliance with the applicable provisions in this subpart specified in § 63.11140(b)(1)(iii) by April 17, 2015.

(d) If you own or operate an affected source that commenced construction or reconstruction between October 6, 2006, and May 20, 2011, then you must achieve compliance with the applicable provisions of this subpart specified in § 63.11140(b)(3) by April 17, 2015.

(e) If you own or operate a new affected source as specified in § 63.11140(b)(4), then you must achieve compliance with the applicable provisions in this subpart specified in § 63.11140(b)(4)(i) by the dates in paragraphs (e)(1) and (2) of this section.

(1) If you start up your affected source between May 20, 2011, and April 17, 2012, then you must achieve compliance with the applicable provisions in this subpart not later than April 17, 2012.

(2) If you start up your affected source after April 17, 2012, then you

must achieve compliance with the provisions in this subpart upon startup of your affected source.

[77 FR 22905, Apr. 17, 2012]

STANDARDS AND COMPLIANCE REQUIREMENTS

**§ 63.11142 What are the standards and compliance requirements for new and existing sources?**

(a) You must meet all the requirements in 40 CFR part 61, subpart F, except for §§ 61.62 and 61.63.

(b) You must comply with each emission limit and standard specified in Table 1 to this subpart that applies to your existing affected source, and you must comply with each emission limit and standard specified in Table 2 to this subpart that applies to your new affected source.

(c) The emission limits, operating limits and work practice standards specified in this subpart apply at all times, including periods of startup, shutdown and malfunction.

(d) You must demonstrate initial compliance by the dates specified in § 63.11141.

(e) You must conduct subsequent performance testing according to the schedule specified in § 63.11905.

(f) You must meet the requirements of the applicable sections of 40 CFR part 63, subpart HHHHHHH, as specified in paragraphs (f)(1) through (19) of this section, except for the purposes of complying with this subpart, where the applicable sections of 40 CFR part 63, subpart HHHHHHH, as specified in paragraphs (f)(1) through (19) of this section reference Table 1 or Table 2 to subpart HHHHHHH, reference is made to Table 1 or Table 2 to this subpart.

(1) You must comply with the requirements of § 63.11880(b).

(2) You must comply with the requirements of §§ 63.11890(a) through 63.11890(d) and are subject to § 63.11895.

(3) You must comply with the requirements of § 63.11896, except for the purposes of complying with this subpart, where § 63.11896 refers to § 63.11870(d) of subpart HHHHHHH, reference is made to § 63.11140(b)(4) of this subpart.

(4) You must comply with the requirements of § 63.11900, except for the purposes of complying with this subpart, where § 63.11900 refers to § 63.11875 of subpart HHHHHHH, reference is made to § 63.11141 of this subpart.

(5) You must meet the requirements of § 63.11910 for initial and continuous compliance for storage vessels.

(6) You must meet the requirements of § 63.11915 for equipment leaks.

(7) You must meet the requirements of § 63.11920 for initial and continuous compliance for heat exchange systems.

(8) You must meet the requirements of § 63.11925 for initial and continuous compliance for process vents.

(9) You must meet the requirements of § 63.11930 for closed vent systems.

(10) You must meet the requirements of § 63.11935 for continuous emissions monitoring systems (CEMS) and continuous parameter monitoring systems (CPMS) to demonstrate initial and continuous compliance with the emission standards for process vents.

(11) You must meet the requirements of § 63.11940 for continuous monitoring requirements for control devices required to install CPMS to meet the emission limits for process vents.

(12) You must meet the requirements of § 63.11945 for performance testing requirements for process vents.

(13) You must meet the requirements of § 63.11950 for emissions calculations to be used for an emission profile by process of batch process operations.

(14) You must meet the requirements of § 63.11955 for initial and continuous compliance requirements for other emission sources.

(15) You must meet the requirements of § 63.11956 for ambient monitoring.

(16) You must meet the requirements of § 63.11960 for initial and continuous compliance requirements for stripped resin.

(17) You must meet the requirements of § 63.11965 through § 63.11980 for general, initial and continuous compliance, test methods and calculation procedures for wastewater.

(18) You must meet the notification and reporting requirements of § 63.11985.

(19) You must meet the recordkeeping requirements of §§ 63.11990 and 63.11995.

[77 FR 22905, Apr. 17, 2012]

OTHER REQUIREMENTS AND INFORMATION

### § 63.11143 What General Provisions apply to this subpart?

(a) All the provisions in part 61, subpart A of this chapter apply to this subpart.

(b) The provisions in subpart A of this part, applicable to this subpart are specified in paragraphs (b)(1) and (2) of this section.

(1) § 63.1(a)(1) through (10).

(2) § 63.1(b) except paragraph (b)(3), §§ 63.1(c) and 63.1(e).

(c) Section 63.11885 specifies which parts of the General Provisions in subpart A of this part apply to you.

[77 FR 22906, Apr. 17, 2012]

### § 63.11144 What definitions apply to this subpart?

(a) On and before April 17, 2012, the terms used in this subpart are defined in the Clean Air Act; §§ 61.02 and 61.61 of this chapter; and § 63.2 for terms used in the applicable provisions of subpart A of this part, as specified in § 63.11143(b).

(b) After April 17, 2012, terms used in this subpart are defined in the Clean Air Act; § 63.2; and § 63.12005.

[77 FR 22906, Apr. 17, 2012]

### § 63.11145 Who implements and enforces this subpart?

(a) This subpart can be implemented and enforced by the U.S. EPA or a delegated authority such as a state, local or tribal agency. If the U.S. EPA Administrator has delegated authority to a state, local or tribal agency, then that agency has the authority to implement and enforce this subpart. You should contact your U.S. EPA Regional Office to find out if this subpart is delegated to a state, local or tribal agency within your state.

(b) In delegating implementation and enforcement authority of this subpart to a state, local or tribal agency under subpart E of this part, the approval authorities contained in paragraphs (b)(1) through (4) of this section are retained by the Administrator of the U.S. EPA and are not transferred to the state, local or tribal agency.

(1) Approval of an alternative means of emissions imitation under § 61.12(d) of this chapter.

(2) Approval of a major change to test methods under § 61.13(h) of this chapter. A ''major change to test method'' is defined in § 63.90.

(3) Approval of a major change to monitoring under § 61.14(g) of this chapter. A ''major change to monitoring'' is defined in § 63.90.

(4) Approval of a major change to reporting under § 61.10. A ''major change to recordkeeping/reporting'' is defined in § 63.90.

[77 FR 22906, Apr. 17, 2012]

TABLE 1 TO SUBPART DDDDDD OF PART 63—EMISSION LIMITS AND STANDARDS FOR EXISTING AFFECTED SOURCES

| For this type of emission point . . . | And for this air pollutant . . . | And for an affected source producing this type of PVC resin . . . | You must meet this emission limit . . . |
|---|---|---|---|
| PVC-only process vents [a] | Vinyl chloride | All resin types | 5.3 parts per million by volume (ppmv). |
| | Total hydrocarbons | All resin types | 46 ppmv measured as propane. |
| | Total organic HAP [b] | All resin types | 140 ppmv. |
| | Dioxins/furans (toxic equivalency basis). | All resin types | 0.13 nanograms per dry standard cubic meter (ng/dscm). |
| PVC-combined process vents [a] | Vinyl chloride | All resin types | 0.56 ppmv. |
| | Total hydrocarbons | All resin types | 2.3 ppmv measured as propane. |
| | Total organic HAP [b] | All resin types | 29 ppmv. |
| | Dioxins/furans (toxic equivalency basis). | All resin types | 0.076 ng/dscm. |
| Stripped resin | Vinyl chloride | Bulk resin | 7.1 parts per million by weight (ppmw). |

| For this type of emission point . . . | And for this air pollutant . . . | And for an affected source producing this type of PVC resin . . . | You must meet this emission limit . . . |
|---|---|---|---|
| | Total non-vinyl chloride organic HAP. | Dispersion resin | 1,500 ppmw. |
| | | Suspension resin | 36 ppmw. |
| | | Suspension blending resin | 140 ppmw. |
| | | Copolymer resin | 790 ppmw. |
| | | Bulk resin | 170 ppmw. |
| | | Dispersion resin | 320 ppmw. |
| | | Suspension resin | 36 ppmw. |
| | | Suspension blending resin | 500 ppmw. |
| | | Copolymer resin | 1,900 ppmw. |
| Process Wastewater | Vinyl chloride | All resin types | 2.1 ppmw. |

[a] Emission limits at 3-percent oxygen, dry basis.
[b] Affected sources have the option to comply with either the total hydrocarbon limit or the total organic HAP limit.

[80 FR 5940, Feb. 4, 2015]

TABLE 2 TO SUBPART DDDDDD OF PART 63—EMISSION LIMITS AND STANDARDS FOR NEW AFFECTED SOURCES

| For this type of emission point . . . | And for this air pollutant . . . | And for an affected source producing this type of PVC resin . . . | You must meet this emission limit . . . |
|---|---|---|---|
| PVC-only process vents[a] | Vinyl chloride | All resin types | 5.3 parts per million by volume (ppmv). |
| | Total hydrocarbons | All resin types | 46 ppmv measured as propane. |
| | Total organic HAP[b] | All resin types | 140 ppmv. |
| | Dioxins/furans (toxic equivalency basis). | All resin types | 0.13 nanograms per dry standard cubic meter (ng/dscm). |
| PVC-combined process vents[a] | Vinyl chloride | All resin types | 0.56 ppmv. |
| | Total hydrocarbons | All resin types | 2.3 ppmv measured as propane. |
| | Total organic HAP[b] | All resin types | 29 ppmv. |
| | Dioxins/furans (toxic equivalency basis). | All resin types | 0.076 ng/dscm. |
| Stripped resin | Vinyl chloride | Bulk resin | 7.1 parts per million by weight (ppmw). |
| | Total non-vinyl chloride organic HAP. | Dispersion resin | 1,500 ppmw. |
| | | Suspension resin | 36 ppmw. |
| | | Suspension blending resin | 140 ppmw. |
| | | Copolymer resin | 790 ppmw. |
| | | Bulk resin | 170 ppmw. |
| | | Dispersion resin | 320 ppmw. |
| | | Suspension resin | 36 ppmw. |
| | | Suspension blending resin | 500 ppmw. |
| | | Copolymer resin | 1,900 ppmw. |
| Process Wastewater | Vinyl chloride | All resin types | 2.1 ppmw. |

[a] Emission limits at 3 percent oxygen, dry basis.
[b] Affected sources have the option to comply with either the total hydrocarbon limit or the total organic HAP limit.

[80 FR 5941, Feb. 4, 2015]

## Subpart EEEEEE—National Emission Standards for Hazardous Air Pollutants for Primary Copper Smelting Area Sources

SOURCE: 72 FR 2944, Jan. 23, 2007, unless otherwise noted.

APPLICABILITY AND COMPLIANCE DATES

### §63.11146 What are the applicability provisions and compliance dates?

(a) You are subject to this subpart if you own or operate a primary copper smelter that is an area source of hazardous air pollutant (HAP) emissions.

(b) This subpart applies to each new or existing affected source. The affected source is each primary copper smelter.

(1) An affected source is existing if you commenced construction or reconstruction of the affected source before October 6, 2006.

(2) An affected source is new if you commenced construction or reconstruction of the affected source on or after October 6, 2006.

(c) This subpart does not apply to research and development facilities, as defined in section 112(c)(7) of the Clean Air Act (CAA).

(d) If you own or operate an area source subject to this subpart, you must obtain a permit under 40 CFR part 70 or 40 CFR part 71.

(e) If you own or operate an existing affected source, you must achieve compliance with the applicable provisions of this subpart by January 23, 2007.

(f) If you own or operate a new affected source, you must achieve compliance with the applicable provisions of this subpart by the dates in paragraphs (f)(1) and (2) of this section.

(1) If you startup a new affected source on or before January 23, 2007, you must achieve compliance with the applicable provisions of this subpart not later than January 23, 2007.

(2) If you startup a new affected source after January 23, 2007, you must achieve compliance with the applicable provisions of this subpart upon startup of your affected source.

STANDARDS AND COMPLIANCE REQUIREMENTS

### § 63.11147 What are the standards and compliance requirements for existing sources not using batch copper converters?

(a) *Emissions limits and work practice standards.* (1) You must not discharge to the atmosphere through any combination of stacks or other vents captured process exhaust gases from the copper concentrate dryers, smelting vessels, converting vessels, matte drying and grinding plants, secondary gas systems, and anode refining department that contain particulate matter less than 10 microns in aerodynamic diameter ($PM_{10}$) in excess of 89.5 pounds per hour (lb/hr) on a 24-hour average basis.

(2) You must operate a capture system that collects the gases and fumes released during the transfer of molten materials from smelting vessels and converting vessels and conveys the collected gas stream to a control device.

(3) You must operate one or more capture systems that collect the gases and fumes released from each vessel used to refine blister copper, remelt anode copper, or remelt anode scrap and convey each collected gas stream to a control device. One control device may be used for multiple collected gas streams.

(b) *Compliance requirements.* For purposes of determining compliance with the emissions limit in paragraph (a)(1) of this section, you must comply with the requirements in paragraphs (b)(1) through (7) of this section.

(1) You must calibrate, maintain and operate a system to continuously measure emissions of particulate matter (PM) from the smelter's main stack.

(2) All PM collected by the smelter main stack continuous PM sampling system is reported as $PM_{10}$ unless you demonstrate to the satisfaction of the permitting authority that, due to an infrequent event, the measured PM contains a large fraction of particles greater than 10 microns in diameter.

(3) To determine the mass emissions rate, the $PM_{10}$ concentration as determined by the smelter main stack continuous PM sampling system is multiplied by the volumetric flow rate for the smelter main stack and any necessary conversion factors.

(4) Compliance with the $PM_{10}$ emissions limit is demonstrated based on the average mass $PM_{10}$ emissions rate for each 24-hour period.

(5) The results of the PM monitoring and calculated average mass $PM_{10}$ emissions rate for each 24-hour period must be recorded and the records maintained for at least 5 years. Collected data must be available for inspection when the required laboratory analysis is completed.

(6) You must submit to the permitting authority by the 20th day of each month a report summarizing the 24-hour average mass $PM_{10}$ emissions rates for the previous month.

(7) You may certify initial compliance with the emissions limit in paragraph (a)(1) of this section based on the

results of PM sampling conducted during the previous month.

(c) *Operation and maintenance requirements.* (1) At all times, including periods of startup, shutdown, and malfunction, you must to the extent practicable, maintain and operate any affected source, including associated air pollution control equipment, in a manner consistent with good air pollution control practice for minimizing emissions. Determination of whether acceptable operating and maintenance procedures are being used will be based on information available to the permitting authority which may include, but is not limited to, monitoring results, opacity observations, review of operating and maintenance procedures, and inspection of the source.

(2) All pollution control equipment must be installed, maintained, and operated properly. Instructions from the vendor or established maintenance practices that maximize pollution control must be followed. All necessary equipment control and operating devices, such as pressure gauges, amp meters, volt meters, flow rate indicators, temperature gauges, continuous emission monitors, etc., must be installed, operated properly, and easily accessible to compliance inspectors. A copy of all manufacturers' operating instructions for pollution control equipment and pollution emitting equipment must be maintained at your facility site. These instructions must be available to all employees who operate the equipment and must be made available to the permitting authority upon request. Maintenance records must be made available to the permitting authority upon request.

(3) You must document the activities performed to assure proper operation and maintenance of the air pollution control equipment and monitoring systems or devices.

(4) Except as provided in paragraph (c)(5) of this section, in the event of an emergency situation the owner or operator must comply with the requirements in paragraphs (c)(4)(i) through (iii) of this section. For the purposes of complying with this paragraph, an emergency situation is any situation arising from sudden and reasonably unforeseeable events beyond the control of the facility owner or operator that requires immediate corrective action to restore normal operation, and that causes the affected source to exceed an applicable emissions limitation under this subpart, due to unavoidable increases in emissions attributable to the emergency. An emergency must not include noncompliance to the extent it is caused by improperly designed equipment, lack of preventive maintenance, careless or improper operation, or operator error.

(i) During the period of the emergency, you must implement all reasonable steps to minimize levels of emissions that exceed the emissions standards or other applicable requirements in this subpart.

(ii) You must document through signed contemporaneous logs or other relevant evidence that an emergency occurred and you can identify the probable cause, your facility was being operated properly at the time the emergency occurred, and the corrective actions taken to minimize emissions as required by paragraph (c)(4)(i) of this section.

(iii) You must submit a notice of the emergency to the permitting authority within two working days of the time when emissions limitations were exceeded due to the emergency (or an alternate timeframe acceptable to the permitting authority). This notice must contain a description of the emergency, any steps taken to mitigate emissions, and corrective actions taken.

(5) As an alternative to the requirements in paragraph (c)(4) of this section, you must comply with the startup, shutdown, and malfunction requirements in 40 CFR 63.6(e)(3).

(d) *Deviations.* You must submit written notification to the permitting authority of any deviation from the requirements of this subpart, including the probable cause of such deviations and any corrective actions or preventative measures taken. You must submit this notification within 14 days of the date the deviation occurred.

(e) *Reports.* You must submit semiannual monitoring reports to your permitting authority. All instances of deviations from the requirements of this

subpart must be clearly identified in the reports.

(f) *Records*. (1) You must retain records of all required monitoring data and support information. Support information includes all calibration and maintenance records, all original strip charts or appropriate recordings for continuous monitoring instrumentation, and copies of all reports required by this subpart. For all monitoring requirements, the owner or operator must record, where applicable, the date, place, and time of sampling or measurement; the date analyses were performed; the company or entity that performed the analyses; the analytical techniques or methods used; the results of such analyses; and the operating conditions existing at the time of sampling or measurement.

(2) You must maintain records of the activities performed to assure proper operation and maintenance of the air pollution control equipment and monitoring systems or devices. Records of these activities must be maintained for at least 5 years.

### § 63.11148 What are the standards and compliance requirements for existing sources using batch copper converters?

(a) *Emissions limits and work practice standards*. (1) For each copper concentrate dryer, you must not discharge to the atmosphere from the dryer vent any gases that contain total particulate matter (PM) in excess of 0.022 grains per dry standard cubic foot (gr/dscf).

(2) You must exhaust the process off gas from each smelting vessel to a control device according to the requirements in paragraphs (a)(2)(i) and (ii) of this section.

(i) During periods when copper ore concentrate feed is charged to and smelted to form molten copper matte and slag layers in the smelting vessel, you must exhaust the process off gas from the smelting vessel to a gas cleaning system controlling PM and to a sulfuric acid plant prior to discharge to the atmosphere.

(ii) During periods when no copper ore concentrate feed is charged to the smelting vessel but the smelting vessel remains in operation to temporarily hold molten material in the vessel before resuming copper production, you must exhaust the process off gas from the smelting vessel to an electrostatic precipitator, wet scrubber, or baghouse prior to discharge to the atmosphere.

(3) You must control the process emissions released when tapping copper matte or slag from a smelting vessel according to paragraphs (a)(3)(i) and (ii) of this section.

(i) You must operate a capture system that collects the gases and fumes released when copper matte or slag is tapped from the smelting vessel. The design and placement of this capture system must be such that the tapping port opening, launder, and receiving vessel (e.g., ladle, slag pot) are positioned within the confines or influence of the capture system's ventilation draft during those times when the copper matte or slag is flowing from the tapping port opening.

(ii) You must not cause to be discharged to the atmosphere from the capture system used to comply with paragraph (a)(3)(i) of this section any gases that contain total PM in excess of 0.022 gr/dscf.

(4) For each batch copper converter, you must meet the requirements in paragraphs (a)(4)(i) through (iv) of this section.

(i) You must operate a primary capture system that collects the process off gas vented when one or more batch copper converters are blowing. If you operate a batch copper converter that does not use a ''U''-shaped side flue located at one end of the converter, then the capture system design must include use of a primary hood that covers the entire mouth of each batch copper converter vessel when the copper converter is positioned for blowing. The capture system may use multiple intake and duct segments through which the ventilation rates are controlled independently of each other.

(ii) If you operate a batch copper converter that does not use a ''U''-shaped side flue located at one end of the converter, then you must operate a secondary capture system that collects gases and fumes released from the batch copper converter when the converter mouth is rotated out partially or totally from within the confines or

influence of the primary capture system's ventilation draft during charging, skimming, pouring, or holding. The capture system design must use additional hoods (e.g., sliding secondary hoods, air curtain hoods) or other capture devices (e.g., building evacuation systems). The capture system may use multiple intake and duct segments through which the ventilation rates are controlled independently of each other, and individual duct segments may be connected to separate PM control devices.

(iii) You must exhaust the process off gas captured by the primary capture system that is used to comply with paragraph (a)(4)(i) of this section to a gas cleaning system controlling PM and to a sulfuric acid plant prior to discharge to the atmosphere.

(iv) For each secondary capture system that is used to comply with paragraph (a)(4)(ii) of this section and is not vented to a gas cleaning system controlling PM and a sulfuric acid plant, you must not cause to be discharged to the atmosphere any gases that contain total particulate matter in excess of 0.02 grains/dscf.

(b) *Monitoring requirements for electrostatic precipitators*. To monitor the performance of each electrostatic precipitator used to comply with the PM emissions limits in paragraph (a) of this section, you must use a continuous opacity monitoring system (COMS) that is installed at the outlet of each electrostatic precipitator or a common duct at the outlet of multiple electrostatic precipitators.

(1) Each COMS must meet Performance Specification 1 in 40 CFR part 60, appendix B.

(2) You must comply with the quality assurance requirements in paragraphs (b)(2)(i) through (v) of this section.

(i) You must automatically (intrinsic to the opacity monitor) check the zero and upscale (span) calibration drifts at least once daily. For a particular COMS, the acceptable range of zero and upscale calibration materials is as defined in the applicable version of Performance Specification 1 in 40 CFR part 60, appendix B.

(ii) You must adjust the zero and span whenever the 24-hour zero drift or 24-hour span drift exceeds 4 percent opacity. The COMS must allow for the amount of excess zero and span drift measured at the 24-hour interval checks to be recorded and quantified. The optical surfaces exposed to the effluent gases must be cleaned prior to performing the zero and span drift adjustments, except for systems using automatic zero adjustments. For systems using automatic zero adjustments, the optical surfaces must be cleaned when the cumulative automatic zero compensation exceeds 4 percent opacity.

(iii) You must apply a method for producing a simulated zero opacity condition and an upscale (span) opacity condition using a certified neutral density filter or other related technique to produce a known obscuration of the light beam. All procedures applied must provide a system check of the analyzer internal optical surfaces and all electronic circuitry including the lamp and photodetector assembly.

(iv) Except during periods of system breakdowns, repairs, calibration checks, and zero and span adjustments, the COMS must be in continuous operation and must complete a minimum of one cycle of sampling and analyzing for each successive 10 second period and one cycle of data recording for each successive 6-minute period.

(v) You must reduce all data from the COMS to 6-minute averages. Six-minute opacity averages must be calculated from 36 or more data points equally spaced over each 6-minute period. Data recorded during periods of system breakdowns, repairs, calibration checks, and zero and span adjustments must not be included in the data averages. An arithmetic or integrated average of all data may be used.

(3) You must evaluate opacity measurements from the COMS on a 24-hour rolling average excluding periods of startup, shutdown, and malfunction. If the 24-hour rolling average opacity exceeds 15 percent, you must initiate investigation of the relevant controls or equipment within 24 hours of the first discovery of the high opacity incident and, if necessary, take corrective action as soon as practicable to adjust or repair the controls or equipment to reduce the opacity average to below the 15 percent level.

(4) You must log in ink or electronic format and maintain a record of 24-hour opacity measurements performed in accordance with paragraph (b)(3) of this section and any corrective actions taken, if any. A record of corrective actions taken must include the date and time during which the 24-hour rolling average opacity exceeded 15 percent and the date, time and type of the corrective action.

(c) *Monitoring requirements for baghouses.* To monitor the performance of each baghouse used to comply with PM emissions limits in paragraph (a) of this section, you must use a bag leak detection system according to the requirements in paragraphs (c)(1) through (4) of this section.

(1) You must install, calibrate, maintain, and continuously operate a bag leak detection system for the baghouse to monitor the baghouse performance.

(2) The baghouse leak detection system must meet the specifications and requirements in paragraphs (c)(2)(i) through (v) of this section.

(i) The bag leak detection system must be certified by the manufacturer to be capable of detecting particulate matter emissions at concentrations that can effectively discern any dysfunctional leaks of the baghouse.

(ii) The bag leak detection system sensor must provide output of relative or absolute particulate matter loadings.

(iii) The bag leak detection system must be equipped with an alarm system that will sound automatically when an increase in relative particulate emissions over a preset level is detected. The alarm must be located where it is easily heard by plant operating personnel.

(iv) The bag leak detection system must be installed downstream of the baghouse.

(v) The bag leak detection system must be installed, operated, calibrated, and maintained in a manner consistent with the manufacturer's written specifications and recommendations. The calibration of the system must, at a minimum, consist of establishing the relative baseline output level by adjusting the sensitivity and the averaging period of the device and establishing the alarm set points and the alarm delay time.

(3) If the bag leak detection system alarm sounds, you must initiate investigation of the baghouse within 24 hours of the first discovery of the alarm and, if necessary, take corrective action as soon as practicable to adjust or repair the baghouse to minimize possible exceedances of the applicable PM emissions limits in paragraph (a) of this section.

(4) You must log in ink or electronic format and maintain a record of installation, calibration, maintenance, and operation of the bag leak detection system. If the bag leak detection system alarm sounds, the records must include an identification of the date and time of all bag leak detection alarms, their cause, and an explanation of the corrective actions taken, if any.

(d) *Alternative monitoring requirements for baghouses.* As an alternative to the requirements in paragraph (c) of this section for bag leak detection systems, you must monitor the performance of each baghouse used to comply with a PM emissions limit in paragraph (a) of this section using a COMS that is installed at the outlet on the baghouse or a common duct at the outlet of multiple baghouses. Each COMS must meet the requirements in paragraphs (b)(1) through (4) of this section.

(e) *Performance testing.* (1) You must demonstrate initial compliance with the applicable PM emissions limits in paragraph (a) of this section based on the results of a performance test for each affected source.

(i) You may certify initial compliance for an affected source based on the results of a previous performance test conducted within the past 12 months before your compliance date.

(ii) If you have not conducted a performance test to demonstrate compliance with the applicable emissions limits within the past 12 months before your compliance date, you must conduct a performance test within 180 days of your compliance date and report the results in your notification of compliance status.

(2) You must demonstrate subsequent compliance with the applicable PM emissions limits in paragraph (a) of

this section based on the results of repeat performance tests conducted at least every 2.5 years for each affected source.

(3) You must conduct each performance test according to §63.7(e)(1) using the test methods and procedures in paragraphs (e)(3)(i) through (v) of this section.

(i) Method 1 or 1A (40 CFR part 60, appendix A) to select sampling port locations and the number of traverse points in each stack or duct. Sampling sites must be located at the outlet of the control device (or at the outlet of the emissions source if no control device is present) prior to any releases to the atmosphere.

(ii) Method 2, 2A, 2C, 2D, 2F, or 2G (40 CFR part 60, appendix A) to determine the volumetric flow rate of the stack gas.

(iii) Method 3, 3A, or 3B (40 CFR part 60, appendix A) to determine the dry molecular weight of the stack gas. You may use ANSI/ASME PTC 19.10–1981, ''Flue and Exhaust Gas Analyses'' (incorporated by reference—see §63.14) as an alternative to EPA Method 3B.

(iv) Method 4 (40 CFR part 60, appendix A) to determine the moisture content of the stack gas.

(v) Method 5 (40 CFR part 60, appendix A) to determine the PM concentration for negative pressure baghouses or Method 5D (40 CFR part 60, appendix A) for positive pressure baghouses. A minimum of three valid test runs are needed to comprise a PM performance test.

(f) *Operation and maintenance requirements.* (1) At all times, including periods of startup, shutdown, and malfunction, you must to the extent practicable, maintain and operate any affected source, including associated air pollution control equipment, in a manner consistent with good air pollution control practice for minimizing emissions. Determination of whether acceptable operating and maintenance procedures are being used will be based on information available to the permitting authority which may include, but is not limited to, monitoring results, opacity observations, review of operating and maintenance procedures, and inspection of the source.

(2) All pollution control equipment must be installed, maintained, and operated properly. Instructions from the vendor or established maintenance practices that maximize pollution control must be followed. All necessary equipment control and operating devices, such as pressure gauges, amp meters, volt meters, flow rate indicators, temperature gauges, continuous emissions monitor, etc., must be installed, operated properly and easily accessible to compliance inspectors. A copy of all manufacturers' operating instructions for pollution control equipment and pollution emitting equipment must be maintained at your facility site. These instructions must be available to all employees who operate the equipment and must be made available to the permitting authority upon request. Maintenance records must be made available to the permitting authority upon request.

(3) You must document the activities performed to assure proper operation and maintenance of the air pollution control equipment and monitoring systems or devices. Records of these activities must be maintained as required by the permitting authority.

(4) Except as specified in paragraph (f)(5) of this section, in the event of an emergency situation, you must comply with the requirements specified in paragraphs (f)(4)(i) through (iii) of this section. For the purpose of complying with this paragraph, an emergency situation is any situation arising from sudden and reasonably unforeseeable events beyond the control of the facility owner or operator that requires immediate corrective action to restore normal operation and that causes the affected source to exceed applicable emission limitation under this subpart due to unavoidable increases in emissions attributable to the emergency. An emergency must not include noncompliance to the extent it is caused by improperly designed equipment, lack of preventive maintenance, careless or improper operation, or operator error.

(i) During the period of the emergency you must implement all reasonable steps to minimize levels of emissions that exceeded the emission standards or other applicable requirements in this subpart.

(ii) You must document through signed contemporaneous logs or other relevant evidence that an emergency occurred and you can identify the probable cause, your facility was being operated properly at the time the emergency occurred, and the corrective actions taken to minimize emissions as required by paragraph (f)(4)(i) of this section.

(iii) You must submit a notice of the emergency to the permitting authority within two working days of the time when emission limitations were exceeded due to the emergency (or an alternate timeframe acceptable to the permitting authority). This notice must contain a description of the emergency, any steps taken to mitigate emissions, and corrective actions taken.

(5) As an alternative to the requirements in paragraph (f)(4) of this section, you must comply with the startup, shutdown, and malfunction requirements in 40 CFR 63.6(e)(3).

(g) *Recordkeeping requirements.* (1) You must maintain records of the occurrence and duration of any startup, shutdown, or malfunction in the operation of an affected source subject to this subpart; any malfunction of the air pollution control equipment; or any periods during which a continuous monitoring system or monitoring device is inoperative.

(2) You must maintain a file of all measurements, including continuous monitoring system, monitoring device, and performance testing measurements; all continuous monitoring system performance evaluations; all continuous monitoring system or monitoring device calibration checks; adjustments and maintenance performed on these systems or devices; and all other information required by this section recorded in a permanent form suitable for inspection. The file must be retained for at least 5 years following the date of such measurements, maintenance, reports.

(h) *Reporting requirements.* (1) You must prepare and submit to the permitting authority an excess emissions and monitoring systems performance report and summary report every calendar quarter. A less frequent reporting interval may used for either report as approved by the permitting authority.

(2) The summary report must include the information in paragraphs (h)(2)(i) through (iv) of this section.

(i) The magnitude of excess emissions computed, any conversion factor(s) used, and the date and time of commencement and completion of each time period of excess emissions. The process operating time during the reporting period.

(ii) Specific identification of each period of excess emissions that occurs during startups, shutdowns, and malfunctions of the affected facility. The nature and cause of any malfunction (if known), the corrective action taken or preventative measures adopted.

(iii) The date and time identifying each period during which the continuous monitoring system was inoperative except for zero and span checks and the nature of the system repairs or adjustments.

(iv) When no excess emissions have occurred or the continuous monitoring system(s) have not been inoperative, repaired, or adjusted, such information must be stated in the report.

[72 FR 2944, Jan. 23, 2007, as amended at 72 FR 36367, July 3, 2007]

### § 63.11149 What are the standards and compliance requirements for new sources?

(a) *Emissions limits and work practice standards.* (1) You must not discharge to the atmosphere exhaust gases that contain total PM in excess of 0.6 pound per ton of copper concentrate feed charged on a 24-hour average basis from any combination of stacks, vents, or other openings on furnaces, reactors, or other types of process vessels used for the production of anode copper from copper sulfide ore concentrates by pyrometallurgical techniques. Examples of such process equipment include, but are not limited to, copper concentrate dryers, smelting flash furnaces, smelting bath furnaces, converting vessels, combined smelting and converting reactors, anode refining furnaces, and anode shaft furnaces.

(2) You must operate a capture system that collects the gases and fumes released during the transfer of molten materials from smelting vessels and

converting vessels and conveys the collected gas stream to a baghouse or other PM control device.

(3) You must operate one or more capture systems that collect the gases and fumes released from each vessel used to refine blister copper, remelt anode copper, or remelt anode scrap and convey each collected gas stream to a baghouse or other PM control device. One control device may be used for multiple collected gas streams.

(b) *Monitoring requirements.* (1) You must install, operate, and maintain a PM continuous emissions monitoring system (CEMS) to measure and record PM concentrations and gas stream flow rates for the exhaust gases discharged to the atmosphere from each affected source subject to the emissions limit in paragraph (a)(1) of this section. A single PM CEMS may be used for the combined exhaust gas streams from multiple affected sources at a point before the gases are discharged to the atmosphere. For each PM CEMS used to comply with this paragraph, you must meet the requirements in paragraphs (b)(1)(i) through (iii) of this section.

(i) You must install, certify, operate, and maintain the PM CEMS according to EPA Performance Specification 11 in 40 CFR part 60, appendix B, and the quality assurance requirements of Procedure 2 in 40 CFR part 60, appendix F.

(ii) You must conduct an initial performance evaluation of the PM CEMS according to the requirements of Performance Specification 11 in 40 CFR part 60, appendix B. Thereafter, you must perform the performance evaluations as required by Procedure 2 in 40 CFR part 60, appendix F.

(iii) You must perform quarterly accuracy determinations and daily calibration drift tests for the PM CEMS according to Procedure 2 in 40 CFR part 60, appendix F.

(2) You must install, operate, and maintain a weight measurement system to measure and record the weight of the copper concentrate feed charged to the smelting vessel on a daily basis.

(c) *Compliance requirements.* (1) You must demonstrate initial compliance with the emissions limit in paragraph (a)(1) of this section using the procedures in paragraph (c)(2) this section within 180 days after startup and report the results in your notification of compliance status no later than 30 days after the end of the compliance demonstration.

(2) You must demonstrate continuous compliance with the emissions limit in paragraph (a)(1) of this section using the procedures in paragraph (c)(2)(i) through (iii) of this section whenever your facility is producing copper from copper concentrate.

(i) You must continuously monitor and record PM emissions, determine and record the daily (24-hour) value for each day, and calculate and record the daily average pounds of total PM per ton of copper concentrate feed charged to the smelting vessel according to the requirements in paragraph (b) of this section.

(ii) You must calculate the daily average at the end of each calendar day for the preceding 24-hour period.

(iii) You must maintain records of the calculations of daily averages with supporting information and data, including measurements of the weight of copper concentrate feed charged to the smelting vessel. Collected PM CEMS data must be made available for inspection.

(d) *Alternative startup, shutdown, and malfunction requirements.* You must comply with the requirements specified in this paragraph as an alternative to the requirements in 40 CFR 63.6(e)(3). In the event of an emergency situation, you must comply with the requirements specified in paragraphs (d)(1) through (3) of this section. For the purpose of complying with this paragraph, an emergency situation is any situation arising from sudden and reasonably unforeseeable events beyond the control of the facility owner or operator that requires immediate corrective action to restore normal operation, and that causes the affected source to exceed an applicable emissions limitation under this subpart, due to unavoidable increases in emissions attributable to the emergency. An emergency must not include noncompliance to the extent it is caused by improperly designed equipment, lack of preventive maintenance, careless or improper operation, or operator error.

(1) During the period of the emergency, you must implement all reasonable steps to minimize levels of emissions that exceeded the emission standards or other applicable requirements in this subpart.

(2) You must document through signed contemporaneous logs or other relevant evidence that an emergency occurred and you can identify the probable cause, your facility was being operated properly at the time the emergency occurred, and the corrective actions taken to minimize emissions as required by paragraph (d)(1) of this section.

(3) You must submit a notice of the emergency to the permitting authority within two working days of the time when emissions limitations were exceeded due to the emergency (or an alternate timeframe acceptable to the permitting authority). This notice must contain a description of the emergency, any steps taken to mitigate emissions, and corrective actions taken.

(e) *Reports*. You must submit to the permitting authority by the 20th day of each month a summary of the daily average PM per ton of copper concentrate feed charged to the smelting vessel for the previous month.

OTHER REQUIREMENTS AND INFORMATION

### § 63.11150 What General Provisions apply to this subpart?

(a) If you own or operate a new or existing affected source, you must comply with the requirements of the General Provisions (40 CFR part 63, subpart A) as specified in Table 1 to this subpart.

(b) If you own or operate an existing affected source subject to § 63.11147, your notification of compliance status required by § 63.9(h) must include the information specified in paragraphs (b)(1) through (4) of this section.

(1) If you certify initial compliance with the PM emissions limit in § 63.11147(a)(1) based on monitoring data from the previous month, your notification of compliance status must include this certification of compliance, signed by a responsible official: ''This facility complies with the PM emissions limit in § 63.11147(a)(1) based on monitoring data that were collected during the previous month.''

(2) If you conduct a new performance test to demonstrate initial compliance with the PM emissions limit in § 63.11147(a)(1), your notification of compliance status must include the results of the performance test, including required monitoring data.

(3) Your notification of compliance status must include this certification of compliance, signed by a responsible official, for the work practice standard in § 63.11147(a)(2): ''This facility complies with the requirement to capture gases from transfer of molten materials from smelting vessels and converting vessels and convey them to a control device in accordance with § 63.11147(a)(2).''

(4) Your notification of compliance status must include this certification of compliance, signed by a responsible official, for the work practice standard in § 63.11147(a)(3): ''This facility complies with the requirement to capture gases from operations in the anode refining department and convey them to a PM control device in accordance with § 63.11147(a)(3).''

(c) If you own or operate an existing affected source subject to § 63.11148, your notification of compliance status required by § 63.9(h) must include the information specified in paragraphs (c)(1) through (5) of this section.

(1) If you certify initial compliance with the PM emissions limit in § 63.11148(a)(1), (a)(3)(ii), and (a)(4)(iv) based on the results of a previous performance test conducted within the past 12 months before your compliance date, your notification of compliance status must include this certification of compliance, signed by a responsible official: ''This facility complies with the PM emissions limit in § 63.11148(a)(1) based on the results of a previous performance test.''

(2) If you conduct a new performance test to demonstrate initial compliance with the PM emissions limits in § 63.11148(a)(1), (a)(3)(ii), and (a)(4)(iv), your notification of compliance status must include the results of the performance test, including required monitoring data.

(3) Your notification of compliance status must include this certification

of compliance, signed by a responsible official, for the work practice standards in §63.11148(a)(2), and (a)(4)(iii): ''This facility complies with the requirement to vent captured process gases to a gas cleaning system controlling PM and to a sulfuric acid plant in accordance with §63.11148(a)(2) and (a)(4)(iii).''

(4) Your notification of compliance status must include this certification of compliance, signed by a responsible official, for the work practice standard in §63.11148(a)(3)(i): ''This facility complies with the requirement to operate capture systems to collect gases and fumes released when copper matte or slag is tapped from the smelting vessel in accordance with §63.11148(a)(3)(i).''

(5) Your notification of compliance status must include this certification of compliance, signed by a responsible official, for the work practice standard in §63.11148(a)(4): ''This facility complies with the requirement to operate capture systems to collect gases and fumes released during batch copper converter operations in accordance with §63.11148(a)(4).''

(d) If you own or operate a new affected source, your notification of compliance status required by §63.9(h) must include the information in paragraphs (d)(1) through (3) of this section.

(1) Your notification of compliance status must include the results of the initial performance test and monitoring data collected during the test that demonstrate compliance with the emissions limit in §63.11149(a)(1).

(2) Your notification of compliance status must include this certification of compliance, signed by a responsible official, for the work practice standard in §63.11149(a)(2): ''This facility complies with the requirement to capture gases from transfer of molten materials from smelting vessels and converting vessels and convey them to a PM control device in accordance with §63.11149(a)(2).''

(3) Your notification of compliance status must include this certification of compliance, signed by a responsible official, for the work practice standard in §63.11149(a)(3): ''This facility complies with the requirement to capture gases from each vessel used to refine blister copper, remelt anode copper, or remelt anode scrap, and convey them to a PM control device in accordance with §63.11149(a)(3).''

[72 FR 2944, Jan. 23, 2007, as amended at 72 FR 36367, July 3, 2007]

### §63.11151 What definitions apply to this subpart?

Terms used in this subpart are defined in the CAA, in 40 CFR 63.2, and in this section as follows:

*Anode refining department* means the area at a primary copper smelter in which anode copper refining operations are performed. Emissions sources in the anode refining department include anode refining furnaces and anode shaft furnaces.

*Baghouse* means a control device that collects particulate matter by filtering the gas stream through bags. A *baghouse* is also referred to as a ''fabric filter.''

*Bag leak detection system* means a system that is capable of continuously monitoring relative particulate matter (dust) loadings in the exhaust of a baghouse in order to detect bag leaks and other upset conditions. A bag leak detection system includes, but is not limited to, an instrument that operates on triboelectric, light scattering, transmittance or other effect to continuously monitor relative particulate matter loadings.

*Batch copper converter* means a converter in which molten copper matte is charged and then oxidized to form blister copper by a process that is performed in discrete batches using a sequence of charging, blowing, skimming, and pouring.

*Capture system* means the collection of components used to capture gases and fumes released from one or more emissions points and then convey the captured gas stream to a control device. A capture system may include, but is not limited to, the following components as applicable to a given capture system design: Duct intake devices, hoods, enclosures, ductwork, dampers, manifolds, plenums, and fans.

*Charging* means the operating mode for a batch copper converter during which molten or solid material is added into the vessel.

*Control device* means air pollution control equipment used to remove PM from a gas stream.

*Converting vessel* means a furnace, reactor, or other type of vessel in which copper matte is oxidized to form blister copper.

*Copper concentrate* means copper ore that has been beneficiated to increase its copper content.

*Copper concentrate dryer* means a vessel in which copper concentrates are heated in the presence of air to reduce the moisture content of the material. Supplemental copper-bearing feed materials and fluxes may be added or mixed with the copper concentrates fed to a copper concentrate dryer.

*Copper concentrate feed* means the mixture of copper concentrate, secondary copper-bearing materials, recycled slags and dusts, fluxes, and other materials blended together for feeding to the smelting vessel.

*Copper matte* means a material predominately composed of copper and iron sulfides produced by smelting copper ore concentrates.

*Deviation* means any instance in which an affected source subject to this subpart, or an owner or operator of such a source:

(1) Fails to meet any requirement or obligation established by this subpart, including but not limited to any emissions limitation or work practice standard;

(2) Fails to meet any term or condition that is adopted to implement an applicable requirement in this subpart and that is included in the operating permit for any affected source required to obtain such a permit; or

(3) Fails to meet any emissions limitation or work practice standard in this subpart during startup, shutdown, or malfunction, regardless of whether or not such failure is permitted by this subpart.

*Holding* means the operating mode for a batch copper converter or a holding furnace associated with a smelting furnace during which the molten bath is maintained in the vessel but no blowing or smelting is performed nor is material added into or removed from the vessel.

*Matte drying and grinding plant* means the area at a primary copper smelter in which wet granulated matte copper is ground in a mill, dried by blowing heated air through the mill, and then separated from the drying air stream using a control device such as a baghouse.

*Pouring* means the operating mode for a batch copper converter during which molten copper is removed from the vessel.

*Primary copper smelter* means any installation or any intermediate process engaged in the production of copper from copper sulfide ore concentrates through the use of pyrometallurgical techniques.

*Responsible official* means responsible official as defined at 40 CFR 70.2.

*Secondary gas system* means a capture system that collects the gases and fumes released when removing and transferring molten materials from one or more vessels using tapping ports, launders, and other openings in the vessels. Examples of molten material include, but are not limited to: Copper matte, slag, and blister copper.

*Skimming* means the batch copper converter operating mode during which molten slag is removed from the vessel.

*Smelting vessel* means a furnace, reactor, or other type of vessel in which copper ore concentrate and fluxes are smelted to form a molten mass of material containing copper matte and slag. Other copper-bearing materials may also be charged to the smelting vessel.

*Work practice standard* means any design, equipment, work practice, or operational standard, or combination thereof.

### § 63.11152 Who implements and enforces this subpart?

(a) This subpart can be implemented and enforced by the U.S. EPA, or a delegated authority such as a State, local, or tribal agency. If the U.S. EPA Administrator has delegated authority to a State, local, or tribal agency, then that Agency has the authority to implement and enforce this subpart. You should contact your U.S. EPA Regional Office to find out if this subpart is delegated to a State, local, or tribal agency within your State.

(b) In delegating implementation and enforcement authority of this subpart

to a State, local, or tribal agency under 40 CFR part 63, subpart E, the authorities contained in paragraph (c) of this section are retained by the Administrator of the U.S. EPA and are not transferred to the State, local, or tribal agency.

(c) The authorities that will not be delegated to State, local, or tribal agencies are listed in paragraphs (c)(1) through (5) of this section.

(1) Approval of an alternative nonopacity emissions standard under § 63.6(g).

(2) Approval of an alternative opacity emissions standard under § 63.6(h)(9).

(3) Approval of a major change to a test method under § 63.7(e)(2)(ii) and (f). A ''major change to test method'' is defined in § 63.90.

(4) Approval of a major change to monitoring under § 63.8(f). A ''major change to monitoring'' is defined in § 63.90.

(5) Approval of a major change to recordkeeping/reporting under § 63.10(f). A ''major change to recordkeeping/reporting'' is defined in § 63.90.

As required in § 63.11150(a), you must comply with the requirements of the NESHAP General Provisions (40 CFR part 63, subpart A) as shown in the following table.

TABLE 1 TO SUBPART EEEEEE OF PART 63—APPLICABILITY OF GENERAL PROVISIONS TO SUBPART EEEEEE

| Citation | Subject | Applies to subpart EEEEEE? | Explanation |
|---|---|---|---|
| 63.1(a)(1), (a)(2), (a)(3), (a)(4), (a)(6), (a)(10)–(a)(12) (b)(1), (b)(3), (c)(1), (c)(2), (c)(5), (e). | Applicability | Yes. | |
| 63.1(a)(5), (a)(7)–(a)(9), (b)(2), (c)(3), (c)(4), (d). | Reserved | No. | |
| 63.2 | Definitions | Yes. | |
| 63.3 | Units and Abbreviations | Yes. | |
| 63.4 | Prohibited Activities and Circumvention. | Yes. | |
| 63.5 | Preconstruction Review and Notification Requirements. | No. | |
| 63.6(a), (b)(1)–(b)(5), (b)(7), (c)(1), (c)(2), (c)(5). | Compliance with Standards and Maintenance Requirements—Applicability and Compliance Dates. | Yes. | |
| 63.6(e) | Operation and Maintenance Requirements. | Yes/No | Operation and maintenance requirements do not apply to existing sources except that the startup, shutdown, and malfunction requirements in § 63.6(e)(3) are allowed as an alternative to the rule requirements for emergency situations. Operation and maintenance requirements apply to new sources except that the rule requirements for emergency situations are allowed as an alternative to the startup, shutdown, and malfunction requirements in § 63.6(e)(3). |
| 63.6(f), (g), (i), (j) | Compliance with Nonopacity Emission Standards. | Yes. | |
| 63.6(b)(6), (c)(3), (c)(4), (d), (e)(2), (e)(3)(ii), (h)(3), (h)(5)(iv). | Reserved | No. | |
| 63.6(h)(1)–(h)(4), (h)(5)(i)–(h)(5)(iii), (h)(6)–(h)(9). | | Yes/No | Requirements apply to new sources but not existing sources. |
| 63.7(a), (e), (f), (g), (h) | Performance Testing Requirements. | Yes. | |
| 63.7(b), (c) | | Yes/No | Notification of performance tests and quality assurance program apply to new sources but not existing sources. |
| 63.8(a)(1), (a)(2), (b), (c), (f), (g) | Monitoring Requirements | Yes. | |

| Citation | Subject | Applies to subpart EEEEEE? | Explanation |
|---|---|---|---|
| 63.8(a)(3) | Reserved | No. | |
| 63.8(a)(4) | | No | Subpart EEEEEE does not require flares. |
| 63.8(d), (e) | | Yes/No | Requirements for quality control program and performance evaluations apply to new sources but not existing sources. |
| 63.9(a), (b)(1), (b)(2), (b)(5), (c), (d), (h)(1)–(h)(3), (h)(5), (h)(6), (i), (j). | Notification Requirements | Yes. | |
| 63.9(b)(3), (h)(4) | Reserved | No. | |
| 63.9(b)(4), (f) | | No. | |
| 63.9(e), (g) | | Yes/No | Notification requirements for performance test and use of continuous monitoring systems apply to new sources but not existing sources. |
| 63.10(a), (b)(1), (d)(1), (d)(2), (d)(4), (d)(5), (f). | Recordkeeping and Reporting Requirements. | Yes/No | Recordkeeping requirements apply to new sources but not existing sources. |
| 63.10(b)(2), (b)(3), (c)(1) (c)(5)–(c)(8), (c)(10)–(c)(15), (e)(1), (e)(2). | | Yes/No | Recordkeeping requirements apply to new sources but not existing sources. |
| 63.10(c)(2)–(c)(4), (c)(9) | Reserved | No. | |
| 63.10(d)(3), (e)(4) | | No | Reporting requirements apply to new sources but not existing sources. |
| 63.10(e)(3) | | Yes/No | Reporting requirements apply to new sources but not existing sources. |
| 63.11 | Control Device Requirements | No | Subpart EEEEEE does not require flares. |
| 63.12 | State Authorities and Delegations. | Yes. | |
| 63.13 | Addresses | Yes. | |
| 63.14 | Incorporations by Reference | Yes. | |
| 63.15 | Availability of Information and Confidentiality. | Yes. | |
| 63.16 | Performance Track Provisions | Yes. | |

## Subpart FFFFFF—National Emission Standards for Hazardous Air Pollutants for Secondary Copper Smelting Area Sources

SOURCE: 72 FR 2952, Jan. 23, 2007, unless otherwise noted.

APPLICABILITY AND COMPLIANCE DATES

### § 63.11153 Am I subject to this subpart?

(a) You are subject to this subpart if you own or operate a new secondary copper smelter that is an area source of hazardous air pollutant (HAP) emissions.

(b) This subpart applies to each new affected source. The affected source is each secondary copper smelter. Your secondary copper smelter is a new affected source if you commenced constructed or reconstruction of the affected source on or after October 6, 2006.

(c) This subpart does not apply to research and development facilities, as defined in section 112(c)(7) of the CAA.

(d) If you own or operate an area source subject to this subpart, you must obtain a permit under 40 CFR part 70 or 40 CFR part 71.

[72 FR 2952, Jan. 23, 2007, as amended at 72 FR 36367, July 3, 2007]

### § 63.11154 What are my compliance dates?

(a) If you startup a new affected source on or before January 23, 2007, you must achieve compliance with the applicable provisions of this subpart not later than January 23, 2007.

(b) If you startup a new affected source after January 23, 2007, you must achieve compliance with the applicable

provisions of this subpart upon startup of your affected source.

STANDARDS AND COMPLIANCE REQUIREMENTS

**§63.11155 What are the standards and compliance requirements for new sources?**

(a) You must not discharge to the atmosphere any gases which contain particulate matter (PM) in excess of 0.002 grains per dry standard cubic foot (gr/dscf) from the exhaust vent of any capture system for a smelting furnace, melting furnace, or other vessel that contains molten material and any capture system for the transfer of molten material.

(b) For each smelting furnace, melting furnace, or other vessel that contains molten material, you must install and operate a capture system that collects the gases and fumes from the vessel and from the transfer of molten material and convey the collected gas stream to a control device.

(c) You must prepare and operate at all times according to a written plan for the selection, inspection, and pretreatment of copper scrap to minimize, to the extent practicable, the amount of oil and plastics in the scrap that is charged to the smelting furnace. Your plan must include a training program for scrap inspectors. You must keep records to demonstrate continuous compliance with the requirements of your plan. You must keep a current copy of your pollution prevention plan onsite and available for inspection.

(d) You must install, operate, and maintain a bag leak detection system on all baghouses used to comply with the PM emissions limit in paragraph (a) of this section according to paragraph (d)(1) of this section, prepare and operate by a site-specific monitoring plan according to paragraph (d)(2) of this section, take corrective action according to paragraph (d)(3) of this section, and record information according to paragraph (d)(4) of this section.

(1) Each bag leak detection system must meet the specifications and requirements in paragraphs (d)(1)(i) through (viii) of this section.

(i) The bag leak detection system must be certified by the manufacturer to be capable of detecting PM emissions at concentrations of 1 milligram per actual cubic meter (0.00044 grains per actual cubic foot) or less.

(ii) The bag leak detection system sensor must provide output of relative PM loadings. The owner or operator must continuously record the output from the bag leak detection system using electronic or other means (e.g., using a strip chart recorder or a data logger.)

(iii) The bag leak detection system must be equipped with an alarm system that will sound when the system detects an increase in relative particulate loading over the alarm set point established according to paragraph (d)(1)(iv) of this section, and the alarm must be located such that it can be heard by the appropriate plant personnel.

(iv) In the initial adjustment of the bag leak detection system, you must establish, at a minimum, the baseline output by adjusting the sensitivity (range) and the averaging period of the device, the alarm set points, and the alarm delay time.

(v) Following initial adjustment, you must not adjust the averaging period, alarm set point, or alarm delay time without approval from the Administrator or delegated authority except as provided in paragraph (d)(1)(vi) of this section.

(vi) Once per quarter, you may adjust the sensitivity of the bag leak detection system to account for seasonal effects, including temperature and humidity, according to the procedures identified in the site-specific monitoring plan required by paragraph (d)(2) of this section.

(vii) You must install the bag leak detection sensor downstream of the baghouse and upstream of any wet scrubber.

(viii) Where multiple detectors are required, the system's instrumentation and alarm may be shared among detectors.

(2) You must develop and submit to the Administrator or delegated authority for approval a site-specific monitoring plan for each bag leak detection system. You must operate and maintain the bag leak detection system according to the site-specific monitoring

plan at all times. Each monitoring plan must describe the items in paragraphs (d)(2)(i) through (vi) of this section.

(i) Installation of the bag leak detection system;

(ii) Initial and periodic adjustment of the bag leak detection system, including how the alarm set-point will be established;

(iii) Operation of the bag leak detection system, including quality assurance procedures;

(iv) How the bag leak detection system will be maintained, including a routine maintenance schedule and spare parts inventory list;

(v) How the bag leak detection system output will be recorded and stored; and

(vi) Corrective action procedures as specified in paragraph (d)(3) of this section. In approving the site-specific monitoring plan, the Administrator or delegated authority may allow owners and operators more than 3 hours to alleviate a specific condition that causes an alarm if the owner or operator identifies in the monitoring plan this specific condition as one that could lead to an alarm, adequately explains why it is not feasible to alleviate this specific condition within 3 hours of the time the alarm occurs, and demonstrates that the requested time will ensure alleviation of this condition as expeditiously as practicable.

(3) For each bag leak detection system, you must initiate procedures to determine the cause of every alarm within 1 hour of the alarm. Except as provided in paragraph (d)(2)(vi) of this section, you must alleviate the cause of the alarm within 3 hours of the alarm by taking whatever corrective action(s) are necessary. Corrective actions may include, but are not limited to the following:

(i) Inspecting the baghouse for air leaks, torn or broken bags or filter media, or any other condition that may cause an increase in particulate emissions;

(ii) Sealing off defective bags or filter media;

(iii) Replacing defective bags or filter media or otherwise repairing the control device;

(iv) Sealing off a defective baghouse compartment;

(v) Cleaning the bag leak detection system probe or otherwise repairing the bag leak detection system; or

(vi) Shutting down the process producing the particulate emissions.

(4) You must maintain records of the information specified in paragraphs (d)(4)(i) through (iii) of this section for each bag leak detection system.

(i) Records of the bag leak detection system output;

(ii) Records of bag leak detection system adjustments, including the date and time of the adjustment, the initial bag leak detection system settings, and the final bag leak detection system settings; and

(iii) The date and time of all bag leak detection system alarms, the time that procedures to determine the cause of an alarm were initiated, whether procedures were initiated within 1 hour of the alarm, the cause of the alarm, an explanation of the actions taken, the date and time the cause of the alarm was alleviated, and whether the alarm was alleviated within 3 hours of the alarm.

(e) You must conduct a performance test to demonstrate initial compliance with the PM emissions limit within 180 days after startup and report the results in your notification of compliance status. You must conduct each PM test according to § 63.7(e)(1) using the test methods and procedures in paragraphs (e)(1) through (5) of this section.

(1) Method 1 or 1A (40 CFR part 60, appendix A) to select sampling port locations and the number of traverse points in each stack or duct. Sampling sites must be located at the outlet of the control device (or at the outlet of the emissions source if no control device is present) prior to any releases to the atmosphere.

(2) Method 2, 2A, 2C, 2D, 2F, or 2G (40 CFR part 60, appendix A) to determine the volumetric flow rate of the stack gas.

(3) Method 3, 3A, or 3B (40 CFR part 60, appendix A) to determine the dry molecular weight of the stack gas. You may use ANSI/ASME PTC 19.10–1981, ''Flue and Exhaust Gas Analyses (incorporated by reference—see § 63.14) as an alternative to EPA Method 3B.

(4) Method 4 (40 CFR part 60, appendix A) to determine the moisture content of the stack gas.

(5) Method 5 (40 CFR part 60, appendix A) to determine the PM concentration for negative pressure baghouses and Method 5D (40 CFR part 60, appendix A) for positive pressure baghouses. The sampling time and volume for each run must be at least 60 minutes and 0.85 dry standard cubic meters (30 dry standard cubic feet). A minimum of three valid test runs are needed to comprise a PM performance test.

(f) You must conduct subsequent performance tests to demonstrate compliance with the PM emissions limit at least once every 5 years.

(g) If you use a control device other than a baghouse, you must prepare and submit a monitoring plan to the Administrator for approval. Each plan must contain the information in paragraphs (g)(1) through (5) of this section.

(1) A description of the device;

(2) Test results collected in accordance with paragraph (e) of this section verifying the performance of the device for reducing PM to the levels required by this subpart;

(3) Operation and maintenance plan for the control device (including a preventative maintenance schedule consistent with the manufacturer's instructions for routine and long-term maintenance) and continuous monitoring system.

(4) A list of operating parameters that will be monitored to maintain continuous compliance with the applicable emission limits; and

(5) Operating parameter limits based on monitoring data collected during the performance test.

### §63.11156 [Reserved]

OTHER REQUIREMENTS AND INFORMATION

### §63.11157 What General Provisions apply to this subpart?

(a) If you own or operate a new affected source, you must comply with the requirements of the General Provisions in 40 CFR part 63, subpart A as specified in Table 1 to this subpart.

(b) Your notification of compliance status required by §63.9(h) must include the following:

(1) The results of the initial performance tests and monitoring data collected during the test.

(2) This certification of compliance, signed by a responsible official, for the work practice standard in §63.1155(b): ''This facility complies with the requirement for a capture system for each smelting furnace, melting furnace, or other vessel that contains molten material in accordance with §63.11155(b).''

(3) This certification of compliance, signed by a responsible official, for the work practice standard in §63.11155(c): ''This facility complies with the requirement for a written plan for the selection, inspection, and pretreatment of copper scrap in accordance with §63.11155(c).''

(4) This certification of compliance, signed by a responsible official, for the work practice standard in §63.11155(d)(2): ''This facility has an approved monitoring plan in accordance with §63.11155(d)(2).''

(5) This certification of compliance, signed by a responsible official, for the work practice standard in §63.11155(g): ''This facility has an approved monitoring plan in accordance with §63.11155(g).''

[72 FR 2952, Jan. 23, 2007, as amended at 72 FR 36367, July 3, 2007]

### §63.11158 What definitions apply to this subpart?

Terms used in this subpart are defined in the CAA, in 40 CFR 63.2, and in this section as follows:

*Anode copper* means copper that is cast into anodes and refined in an electrolytic process to produce high purity copper.

*Capture system* means the collection of components used to capture gases and fumes released from one or more emissions points and then convey the captured gas stream to a control device. A capture system may include, but is not limited to, the following components as applicable to a given capture system design: duct intake devices, hoods, enclosures, ductwork, dampers, manifolds, plenums, and fans.

*Melting furnace* means any furnace, reactor, or other type of vessel that heats solid materials and produces a molten mass of material.

*Secondary copper smelter* means a facility that processes copper scrap in a blast furnace and converter or that uses another pyrometallurgical purification process to produce anode copper from copper scrap, including low-grade copper scrap. A facility where recycled copper scrap or copper alloy scrap is melted to produce ingots or for direct use in a manufacturing process is not a secondary copper smelter.

*Smelting furnace* means any furnace, reactor, or other type of vessel in which copper scrap and fluxes are melted to form a molten mass of material containing copper and slag.

*Work practice standard* means any design, equipment, work practice, or operational standard, or combination thereof.

### § 63.11159 Who implements and enforces this subpart?

(a) This subpart can be implemented and enforced by the U.S. EPA, or a delegated authority such as a State, local, or tribal agency. If the U.S. EPA Administrator has delegated authority to a State, local, or tribal agency, then that Agency has the authority to implement and enforce this subpart. You should contact your U.S. EPA Regional Office to find out if this subpart is delegated to a State, local, or tribal agency.

(b) In delegating implementation and enforcement authority of this subpart to a State, local, or tribal agency under 40 CFR part 63, subpart E, the authorities contained in paragraph (c) of this section are retained by the Administrator of the U.S. EPA and are not transferred to the State, local, or tribal agency.

(c) The authorities that will not be delegated to State, local, or tribal agencies are listed in paragraphs (c)(1) through (4) of this section.

(1) Approval of an alternative non-opacity emissions standard under § 63.6(g).

(2) Approval of a major change to test methods under § 63.7(e)(2)(ii) and (f). A ''major change to test method'' is defined in § 63.90.

(3) Approval of a major change to monitoring under § 63.8(f). A ''major change to monitoring'' is defined in § 63.90.

(4) Approval of a major change to recordkeeping/ reporting under § 63.10(f). A ''major change to recordkeeping/reporting'' is defined in § 63.90.

As required in § 63.11157(a), you must comply with the requirements of the General Provisions (40 CFR part 63, subpart A) as shown in the following table.

TABLE 1 TO SUBPART FFFFFF OF PART 63—APPLICABILITY OF GENERAL PROVISIONS TO SUBPART FFFFFF

| Citation | Subject | Applies to subpart FFFFFF? | Explanation |
|---|---|---|---|
| 63.1(a)(1), (a)(2), (a)(3), (a)(4), (a)(6), (a)(10)–(a)(12), (b)(1), (b)(3), (c)(1), (c)(2), (c)(5), (e). | Applicability | Yes. | |
| 63.1(a)(5), (a)(7)–(a)(9), (b)(2), (c)(3), (c)(4), (d). | Reserved | No. | |
| 63.2 | Definitions | Yes. | |
| 63.3 | Units and Abbreviations | Yes. | |
| 63.4 | Prohibited Activities and Circumvention. | Yes. | |
| 63.5 | Preconstruction Review and Notification Requirements. | No. | |
| 63.6(a), (b)(1)–(b)(5), (b)(7), (c)(1), (c)(2), (c)(5), (e)(3)(i), (e)(3)(iii)–(e)(3)(ix), (f), (g), (i), (j). | Compliance with Standards and Maintenance Requirements. | Yes. | |
| 63.6(b)(6), (c)(3), (c)(4), (d), (e)(2), (e)(3)(ii), (h)(3), (h)(5)(iv). | Reserved | No. | |
| 63.6(h)(1)–(h)(4), (h)(5)(i)–(h)(5)(iii), (h)(6)–(h)(9). | | No | Subpart FFFFFF does not include opacity or visible emissions standards. |
| 63.7 | Performance Testing Requirements. | Yes. | |

| Citation | Subject | Applies to subpart FFFFFF? | Explanation |
|---|---|---|---|
| 63.8(a)(1), (a)(2), (b), (f)(1)–(5) | Monitoring Requirements | Yes. | |
| 63.8(a)(3) | Reserved | No. | |
| 63.8(c), (d), (e), (f)(6), (g) | | No | Subpart FFFFFF does not require a continuous monitoring system. |
| 63.8(a)(4) | | No | Subpart FFFFFF does not require flares. |
| 63.9(a), (b)(1), (b)(2), (b)(5), (c), (d), (e), (f), (g), (h)(1)–(h)(3), (h)(5), (h)(6), (i), (j). | Notification Requirements | Yes. | |
| 63.9(b)(3), (h)(4) | Reserved | No. | |
| 63.9(b)(4) | | No. | |
| 63.9(f) | | No | Subpart FFFFFF does not include opacity or visible emissions standards. |
| 63.9(g) | | No | Subpart FFFFFF does not require a continuous monitoring system. |
| 63.10(a), (b)(2)(i)–(b)(2)(v), (b)(2)(xiv), (d)(1), (d)(2), (d)(4), (d)(5), (e)(1), (e)(2), (f). | Recordkeeping and Reporting Requirements. | Yes. | |
| 63.10(c)(2)–(c)(4), (c)(9) | Reserved | No. | |
| 63.10(b)(2)(vi)–(b)(2)(xiii), (c)(1), (c)(5)–(c)(14), (e)(1)–(e)(2), (e)(4). | | | Subpart FFFFFF does not require a continuous monitoring system. |
| 63.10(d)(3) | | No | Subpart FFFFFF does not include opacity or visible emissions standards. |
| 63.10(e)(3) | | Yes. | |
| 63.11 | Control Device Requirements | No | Subpart FFFFFF does not require flares. |
| 63.12 | State Authorities and Delegations. | Yes. | |
| 63.13 | Addresses | Yes. | |
| 63.14 | Incorporations by Reference | Yes. | |
| 63.15 | Availability of Information and Confidentiality. | Yes. | |
| 63.16 | Performance Track Provisions | Yes. | |

## Subpart GGGGGG—National Emission Standards for Hazardous Air Pollutants for Primary Nonferrous Metals Area Sources—Zinc, Cadmium, and Beryllium

SOURCE: 72 FR 2955, Jan. 23, 2007, unless otherwise noted.

APPLICABILITY AND COMPLIANCE DATES

### §63.11160 Am I subject to this subpart?

(a) You are subject to this subpart if you own or operate a primary zinc production facility or primary beryllium production facility that is an area source of hazardous air pollutant (HAP) emissions.

(b) The affected source is each existing or new primary zinc production facility or primary beryllium production facility.

(1) An affected source is existing if you commenced construction or reconstruction of the affected source before October 6, 2006.

(2) An affected source is new if you commenced construction or reconstruction of the affected source on or after October 6, 2006.

(c) If you own or operate a new or existing affected source, you must obtain a permit under 40 CFR part 70 or 71.

### §63.11161 What are my compliance dates?

(a) If you have an existing affected source, you must achieve compliance with applicable provisions in this subpart by January 23, 2007. If you startup a new sintering machine at an existing affected source after January 23, 2007, you must achieve compliance with the applicable provisions in this subpart not later than 180 days after startup.

(b) If you have a new affected source, you must achieve compliance with applicable provisions in this subpart according to the dates in paragraphs (b)(1) and (2) of this section.

(1) If you startup a new affected source on or before January 23, 2007, you must achieve compliance with applicable provisions in this subpart not later than January 23, 2007.

(2) If you startup a new affected source after January 23, 2007, you must achieve compliance with applicable provisions in this subpart upon initial startup.

PRIMARY ZINC PRODUCTION FACILITIES

### § 63.11162 What are the standards and compliance requirements for existing sources?

(a) You must exhaust the off-gases from each roaster to a particulate matter (PM) control device and to a sulfuric acid plant, including during the charging of the roaster.

(b) Except as provided in paragraph (b)(6) of this section, you must not discharge to the atmosphere any gases which contain PM in excess of the emissions limits in paragraphs (b)(1) through (5) of this section.

(1) 0.93 pound per hour (lb/hr) from the exhaust vent of a zinc cathode melting furnace.

(2) 0.1 lb/hr from the exhaust vent of a furnace that melts zinc dust, zinc chips, and/or other materials containing zinc.

(3) 0.228 lb/hr from the vent for the combined exhaust from a furnace melting zinc scrap and an alloy furnace.

(4) 0.014 grains per dry standard cubic foot (gr/dscf) from the exhaust vent of an anode casting furnace.

(5) 0.015 gr/dscf from the exhaust vent of a cadmium melting furnace.

(6) You may elect to meet an emissions limit of 0.005 gr/dscf as an alternative to the emissions limits in lb/hr in paragraphs (b)(1) through (3) of this section.

(c) You must establish an operating range for pressure drop for each baghouse applied to a furnace subject to an emissions limit in paragraph (b) of this section based on the minimum and maximum values recorded during a performance test that demonstrates compliance with the applicable PM emissions limit. Alternatively, you may use an operating range that has been previously established and approved by your permitting authority within the past 5 years. You must monitor the pressure drop daily, maintain the pressure drop for each baghouse within the established operating range, and record the pressure drop measurement in a daily log. You must perform routine maintenance on each baghouse and record maintenance activities in a baghouse maintenance log. Baghouse maintenance logs must include, but are not limited to, inspections, criteria for changing bag filters, and dates on which the bag filters are replaced. Both logs must be maintained in a suitable permanent form and kept available for inspection.

(d) If you own or operate a sintering machine at your facility, you must comply with the PM emissions limit in 40 CFR 60.172(a) and the opacity emissions limit in 40 CFR 60.174(a) for that sintering machine.

(e) If you own or operate a sintering machine at your facility, you must install and operate a continuous opacity monitoring system (COMS) for each sintering machine according to the requirements in 40 CFR 60.175(a). Each COMS must meet Performance Specification 1 (40 CFR part 60, appendix B).

(f) For each furnace at your facility subject to an emissions limit in paragraph (b) of this section, you must demonstrate initial compliance with the applicable PM emissions limit in paragraph (b) of this section based on the results of a performance test for that furnace. If you own or operate a sintering machine, you must also demonstrate initial compliance with the PM and opacity emissions limits in paragraph (d) of this section based on the results of a performance test for that sintering machine.

(1) You may certify initial compliance for a furnace (and sintering machine, if applicable) based on the results of a previous performance test conducted during the past 5 years.

(2) If you have not conducted a performance test to demonstrate compliance with the applicable emissions limits during the past 5 years, you must conduct a performance test within 180

days of your compliance date and report the results in your notification of compliance status. If a furnace subject to an emissions limit in paragraph (b) of this section is not operating on the compliance date and subsequently resumes operation, you must conduct a performance test within 180 days of startup and report the results in your notification of compliance status.

(3) You must conduct each PM test for a furnace according to §63.7(e)(1) using the test methods and procedures in paragraphs (f)(3)(i) through (v) of this section.

(i) Method 1 or 1A (40 CFR part 60, appendix A) to select sampling port locations and the number of traverse points in each stack or duct. Sampling sites must be located at the outlet of the control device (or at the outlet of the emissions source if no control device is present) prior to any releases to the atmosphere.

(ii) Method 2, 2A, 2C, 2D, 2F, or 2G (40 CFR part 60, appendix A) to determine the volumetric flow rate of the stack gas.

(iii) Method 3, 3A, or 3B (40 CFR part 60, appendix A) to determine the dry molecular weight of the stack gas. You may use ANSI/ASME PTC 19.10–1981, ''Flue and Exhaust Gas Analyses (incorporated by reference—see §63.14) as an alternative to EPA Method 3B.

(iv) Method 4 (40 CFR part 60, appendix A) to determine the moisture content of the stack gas.

(v) Method 5 (40 CFR part 60, appendix A) to determine the PM concentration for a negative pressure baghouse, Method 5D (40 CFR part 60, appendix A) for a positive pressure baghouse, or an alternative method previously approved by your permitting authority. A minimum of three valid test runs are needed to comprise a PM performance test.

(4) You must conduct each PM test for a sintering machine according to §63.7(e)(1) and 40 CFR 60.176(b)(1) using the test methods in paragraph (f)(3) of this section. You must determine the PM concentration using EPA Method 5 (40 CFR part 60, appendix A). You may use ANSI/ASME PTC 19.10–1981, ''Flue and Exhaust Gas Analyses'' (incorporated by reference—see §63.14) as an alternative to EPA Method 3B.

(5) You must conduct each opacity test for a sintering machine according to the requirements in §63.6(h)(7). You must determine the opacity of emissions using EPA Method 9 (40 CFR part 60, appendix A).

(g) For each furnace subject to an emissions limit in paragraph (b) of this section, you must conduct subsequent performance tests according to the requirements in paragraph (f)(3) of this section to demonstrate compliance with the applicable PM emissions limit for the furnace every 5 years.

(h) You must submit a notification to your permitting authority of any deviation from the requirements of this subpart within 30 days after the deviation. The notification must describe the probable cause of the deviation and any corrective actions or preventative measures taken.

(i) You must submit semiannual monitoring reports to your permitting authority containing the results for all monitoring required by this subpart. All deviations that occur during the reporting period must be clearly identified.

(j) You must keep records of all required monitoring data and support information. Support information includes all calibration and maintenance records and all original strip chart recordings for continuous monitoring instrumentation and copies of all reports required by this subpart.

(k) You must comply with the operation and maintenance requirements specified in paragraphs (k)(1) and (2) of this section and the requirements for emergency situations specified in paragraph (k)(3) or (4) of this section.

(1) You must maintain all equipment covered under this subpart in such a manner that the performance or operation of such equipment does not cause a deviation from the applicable requirements.

(2) You must keep a maintenance record for each item of air pollution control equipment. At a minimum, this record must show the dates of performing maintenance and the nature of preventative maintenance activities.

(3) Except as specified in paragraph (k)(4) of this section, in the event of an emergency situation you must comply with the requirements in paragraphs

(k)(3)(i) through (iii) of this section. For the purpose of complying with this paragraph, an emergency situation is any situation arising from sudden and reasonably unforeseeable events beyond the control of the facility owner or operator that require immediate corrective action to restore normal operation, and that cause the affected source to exceed applicable emission limitation under this subpart, due to unavoidable increases in emissions attributable to the emergency. An emergency must not include noncompliance to the extent it is caused by improperly designed equipment, lack of preventive maintenance, careless or improper operation, or operator error.

(i) During the period of the emergency you must implement all reasonable steps to minimize levels of emissions that exceeded the emission standards or other applicable requirements in this subpart.

(ii) You must document through signed contemporaneous logs or other relevant evidence that an emergency occurred and you can identify the probable cause, your facility was being operated properly at the time the emergency occurred, and the corrective actions taken to minimize emissions as required by paragraph (k)(3)(i) of this section.

(iii) You must submit a notice of the emergency to the permitting authority within two working days of the time when emission limitations were exceeded due to the emergency (or an alternative timeframe acceptable to the permitting authority). This notice must contain a description of the emergency, any steps taken to mitigate emissions, and corrective actions taken.

(4) As an alternative to the requirements in paragraph (k)(3) of this section, you must comply with the startup, shutdown, and malfunction requirements in 40 CFR 63.6(e)(3).

### § 63.11163 What are the standards and compliance requirements for new sources?

(a) You must exhaust the off-gases from each roaster to a PM control device and to a sulfuric acid plant, including the charging of the roaster.

(b) You must not discharge to the atmosphere any gases which contain PM in excess of the emissions limits in paragraphs (b)(1) through (3) of this section.

(1) 0.005 gr/dscf from the exhaust vent of a zinc cathode melting furnace; scrap zinc melting furnace; furnace melting zinc dust, zinc chips, and other materials containing zinc; and alloy melting furnace.

(2) 0.014 gr/dscf from the exhaust vent of an anode casting furnace.

(3) 0.015 gr/dscf from the exhaust vent of a cadmium melting furnace.

(c) For each melting furnace, you must install and operate a capture system that collects gases and fumes from the melting furnace and from the transfer of molten materials and conveys the collected gases to a control device.

(d) You must install, operate, and maintain a bag leak detection system on all baghouses used to comply with the PM emissions limit in paragraph (b) of this section according to paragraph (d)(1) of this section, prepare and operate by a site-specific monitoring plan according to paragraph (d)(2) of this section, take corrective action according to paragraph (d)(3) of this section, and record information according to paragraph (d)(4) of this section.

(1) Each bag leak detection system must meet the specifications and requirements in paragraphs (d)(1)(i) through (viii) of this section.

(i) The bag leak detection system must be certified by the manufacturer to be capable of detecting PM emissions at concentrations of 1 milligram per actual cubic meter (0.00044 grains per actual cubic foot) or less.

(ii) The bag leak detection system sensor must provide output of relative PM loadings. The owner or operator must continuously record the output from the bag leak detection system using electronic or other means (e.g., using a strip chart recorder or a data logger.)

(iii) The bag leak detection system must be equipped with an alarm system that will sound when the system detects an increase in relative particulate loading over the alarm set point established according to paragraph (d)(1)(iv) of this section, and the alarm

must be located such that it can be heard by the appropriate plant personnel.

(iv) In the initial adjustment of the bag leak detection system, you must establish, at a minimum, the baseline output by adjusting the sensitivity (range) and the averaging period of the device, the alarm set points, and the alarm delay time.

(v) Following initial adjustment, you must not adjust the averaging period, alarm set point, or alarm delay time without approval from the Administrator or delegated authority except as provided in paragraph (d)(1)(vi) of this section.

(vi) Once per quarter, you may adjust the sensitivity of the bag leak detection system to account for seasonal effects, including temperature and humidity, according to the procedures identified in the site-specific monitoring plan required by paragraph (d)(2) of this section.

(vii) You must install the bag leak detection sensor downstream of the baghouse and upstream of any wet scrubber.

(viii) Where multiple detectors are required, the system's instrumentation and alarm may be shared among detectors.

(2) You must develop and submit to the Administrator or delegated authority for approval a site-specific monitoring plan for each bag leak detection system. You must operate and maintain the bag leak detection system according to the site-specific monitoring plan at all times. Each monitoring plan must describe the items in paragraphs (d)(2)(i) through (vi) of this section.

(i) Installation of the bag leak detection system;

(ii) Initial and periodic adjustment of the bag leak detection system, including how the alarm set-point will be established;

(iii) Operation of the bag leak detection system, including quality assurance procedures;

(iv) How the bag leak detection system will be maintained, including a routine maintenance schedule and spare parts inventory list;

(v) How the bag leak detection system output will be recorded and stored; and

(vi) Corrective action procedures as specified in paragraph (d)(3) of this section. In approving the site-specific monitoring plan, the Administrator or delegated authority may allow owners and operators more than 3 hours to alleviate a specific condition that causes an alarm if the owner or operator identifies in the monitoring plan this specific condition as one that could lead to an alarm, adequately explains why it is not feasible to alleviate this condition within 3 hours of the time the alarm occurs, and demonstrates that the requested time will ensure alleviation of this condition as expeditiously as practicable.

(3) For each bag leak detection system, you must initiate procedures to determine the cause of every alarm within 1 hour of the alarm. Except as provided in paragraph (d)(2)(vi) of this section, you must alleviate the cause of the alarm within 3 hours of the alarm by taking whatever corrective action(s) are necessary. Corrective actions may include, but are not limited to the following:

(i) Inspecting the baghouse for air leaks, torn or broken bags or filter media, or any other condition that may cause an increase in particulate emissions;

(ii) Sealing off defective bags or filter media;

(iii) Replacing defective bags or filter media or otherwise repairing the control device;

(iv) Sealing off a defective baghouse compartment;

(v) Cleaning the bag leak detection system probe or otherwise repairing the bag leak detection system; or

(vi) Shutting down the process producing the particulate emissions.

(4) You must maintain records of the information specified in paragraphs (d)(4)(i) through (iii) of this section for each bag leak detection system.

(i) Records of the bag leak detection system output;

(ii) Records of bag leak detection system adjustments, including the date and time of the adjustment, the initial bag leak detection system settings, and the final bag leak detection system settings; and

(iii) The date and time of all bag leak detection system alarms, the time that

procedures to determine the cause of the alarm were initiated, if procedures were initiated within 1 hour of the alarm, the cause of the alarm, an explanation of the actions taken, the date and time the cause of the alarm was alleviated, and if the alarm was alleviated within 3 hours of the alarm.

(e) If there is a sintering machine at your primary zinc production facility, you must comply with the PM emissions limit in 40 CFR 60.172(a) and the opacity emissions limit in 40 CFR 60.174(a) for that sintering machine.

(f) If there is a sintering machine at your primary zinc production facility, you must install and operate a COMS for each sintering machine according to the requirements in 40 CFR 60.175(a). Each COMS must meet EPA Performance Specification 1 (40 CFR part 60, appendix B).

(g) For each furnace (and sintering machine, if applicable) at your facility, you must conduct a performance test to demonstrate initial compliance with each applicable PM emissions limit for that furnace (and the PM and opacity limits for a sintering machine, if applicable) within 180 days after startup and report the results in your notification of compliance status.

(1) You must conduct each PM test for a furnace according to § 63.7(e)(1) using the test methods and procedures in paragraphs (g)(1)(i) through (v) of this section.

(i) Method 1 or 1A (40 CFR part 60, appendix A) to select sampling port locations and the number of traverse points in each stack or duct. Sampling sites must be located at the outlet of the control device (or at the outlet of the emissions source if no control device is present) prior to any releases to the atmosphere.

(ii) Method 2, 2A, 2C, 2D, 2F, or 2G (40 CFR part 60, appendix A) to determine the volumetric flow rate of the stack gas.

(iii) Method 3, 3A, or 3B (40 CFR part 60, appendix A) to determine the dry molecular weight of the stack gas. You may use ANSI/ASME PTC 19.10–1981, ''Flue and Exhaust Gas Analyses'' (incorporated by reference—see § 63.14) as an alternative to EPA Method 3B.

(iv) Method 4 (40 CFR part 60, appendix A) to determine the moisture content of the stack gas.

(v) Method 5 (40 CFR part 60, appendix A) to determine the PM concentration for negative pressure baghouses or Method 5D (40 CFR part 60, appendix A) for positive pressure baghouses. A minimum of three valid test runs are needed to comprise a PM performance test.

(2) You must conduct each PM test for a sintering machine according to § 63.7(e)(1) and 40 CFR 60.176(b)(1) using the test methods in paragraph (g)(1) of this section. You must determine the PM concentration using EPA Method 5 (40 CFR part 60, appendix A). You may use ANSI/ASME PTC 19.10–1981, ''Flue and Exhaust Gas Analyses'' (incorporated by reference—see § 63.14) as an alternative to EPA Method 3B.

(3) You must conduct each opacity test for a sintering machine according to the requirements in § 63.6(h)(7). You must determine the opacity of emissions using EPA Method 9 (40 CFR part 60, appendix A).

(h) You must conduct subsequent performance tests according to the requirements in paragraph (g)(1) of this section for each furnace subject to an emissions limit in paragraph (b) of this section to demonstrate compliance at least once every 5 years.

(i) If you use a control device other than a baghouse, you must prepare and submit a monitoring plan to the Administrator for approval. Each plan must contain the information in paragraphs (i)(1) through (5) of this section.

(1) A description of the device;

(2) Test results collected in accordance with paragraph (g) of this section verifying the performance of the device for reducing PM and opacity to the levels required by this subpart;

(3) Operation and maintenance plan for the control device (including a preventative maintenance schedule consistent with the manufacturer's instructions for routine and long-term maintenance) and continuous monitoring system;

(4) A list of operating parameters that will be monitored to maintain continuous compliance with the applicable emission limits; and

(5) Operating parameter limits based on monitoring data collected during the performance test.

(i) As an alternative to the startup, shutdown, and malfunction requirements in 40 CFR 63.6(e)(3), you must comply with the requirements specified in this paragraph. In the event of an emergency situation, you must comply with the requirements in paragraphs (i)(1) through (3) of this section. For the purpose of complying with this paragraph, an emergency situation is any situation arising from sudden and reasonably unforeseeable events beyond the control of the facility owner or operator that require immediate corrective action to restore normal operation, and that cause the affected source to exceed applicable emission limitation under this subpart, due to unavoidable increases in emissions attributable to the emergency. An emergency must not include noncompliance to the extent it is caused by improperly designed equipment, lack of preventive maintenance, careless or improper operation, or operator error.

(1) During the period of the emergency you must implement all reasonable steps to minimize levels of emissions that exceeded the emission standards or other applicable requirements in this subpart.

(2) You must document through signed contemporaneous logs or other relevant evidence that an emergency occurred and you can identify the probable cause, your facility was being operated properly at the time the emergency occurred, and the corrective actions taken to minimize emissions as required by paragraph (i)(1) of this section.

(3) You must submit a notice of the emergency to the permitting authority within two working days of the time when emission limitations were exceeded due to the emergency (or an alternative timeframe acceptable to the permitting authority). This notice must contain a description of the emergency, any steps taken to mitigate emissions, and corrective actions taken.

**§63.11164 What General Provisions apply to primary zinc production facilities?**

(a) If you own or operate an existing affected source, you must comply with the requirements of the General Provisions in 40 CFR part 63, subpart A, according to Table 1 to this subpart and paragraphs (a)(1) through (3) of this section.

(1) Your notification of compliance status required by §63.9(h) must include this certification of compliance, signed by a responsible official, for the work practice standards in §63.11162(a): ''This facility complies with the work practice standards in §63.11162(a).''

(2) If you certify compliance with the PM emissions limits in §63.11162(b) based on a previous performance test, your notification of compliance status required by §63.9(h) must include this certification of compliance, signed by a responsible official: ''This facility complies with the PM emissions limits in §63.11162(b) based on a previous performance test.''

(3) If you conduct a new performance test to demonstrate compliance with the PM emissions limits for a furnace in §63.11162(b), your notification of compliance status required by §63.9(h) must include the results of the performance test, including required monitoring data.

(b) If you own or operate a new affected source, you must comply with the requirements of the General Provisions (40 CFR part 63, subpart A) as provided in Table 1 to this subpart and paragraphs (b)(1) through (4) of this section.

(1) Your notification of compliance status required in §63.9(h) must include the results of the initial performance tests, including required monitoring data.

(2) Your notification of compliance status required by §63.9(h) must include this certification of compliance, signed by a responsible official, for the work practice standard in §63.11163(a): ''This facility complies with the work practice standards in §63.11163(a).''

(3) Your notification of compliance status required by §63.9(h) must include this certification of compliance, signed by a responsible official, for the capture system requirements in

§ 63.11163(c): ''This facility has installed capture systems according to § 63.11163(c).''

(4) If you use a baghouse that is subject to the requirements in § 63.11163(d), your notification of compliance status required by § 63.9(h) must include this certification of compliance, signed by a responsible official, for the bag leak detection system requirements in § 63.11163(d): ''This facility has an approved monitoring plan in accordance with § 63.11163(d).''

(5) If you use control devices other than baghouses, your notification of compliance status required by § 63.9(h) must include this certification of compliance, signed by a responsible official for the monitoring plan requirements in § 63.11163(i): ''This facility has an approved monitoring plan in accordance with § 63.11163(i).''

PRIMARY BERYLLIUM PRODUCTION FACILITIES

### § 63.11165 What are the standards and compliance requirements for new and existing sources?

You must comply with the requirements in 40 CFR 61.32 through 40 CFR 61.34 of the National Emission Standards for Beryllium (40 CFR part 61, subpart C).

### § 63.11166 What General Provisions apply to primary beryllium production facilities?

(a) You must comply with all of the requirements of the General Provisions in 40 CFR part 61, subpart A.

(b) You must comply with the requirements of the General Provisions in 40 CFR part 63, subpart A, that are specified in paragraphs (b)(1) and (2) of this section.

(1) Section 63.1(a)(1) through (10).

(2) Section 63.1(b) except paragraph (b)(3), § 63.1(c), and § 63.1(e).

OTHER REQUIREMENTS AND INFORMATION

### § 63.11167 What definitions apply to this subpart?

Terms used in this subpart are defined in the CAA; 40 CFR 60.2; 60.171; 61.02; 61.31; 61.61; 63.2; and in this section as follows:

*Alloy furnace* means any furnace used to melt alloys or to produce zinc that contains alloys.

*Anode casting furnace* means any furnace that melts materials to produce the anodes used in the electrolytic process for the production of zinc.

*Bag leak detection system* means a system that is capable of continuously monitoring the relative particulate matter (dust) loadings in the exhaust of a baghouse to detect bag leaks and other conditions that result in increases in particulate loadings. A bag leak detection system includes, but is not limited to, an instrument that operates on triboelectric, electrodynamic, light scattering, light transmittance, or other effect to continuously monitor relative particulate matter loadings.

*Cadmium melting furnace* means any furnace used to melt cadmium or produce cadmium oxide from the cadmium recovered in the zinc production process.

*Capture system* means the collection of equipment used to capture gases and fumes released from one or more emissions points and then convey the captured gas stream to a control device. A capture system may include, but is not limited to, the following components as applicable to a given capture system design: duct intake devices, hoods, enclosures, ductwork, dampers, manifolds, plenums, and fans.

*Deviation* means any instance in which an affected source subject to this subpart, or an owner or operator of such a source:

(1) Fails to meet any requirement or obligation established by this subpart, including but not limited to any emissions limitation or work practice standard;

(2) Fails to meet any term or condition that is adopted to implement an applicable requirement in this subpart and that is included in the operating permit for any affected source required to obtain such a permit; or

(3) Fails to meet any emissions limitation or work practice standard in this subpart during startup, shutdown, or malfunction, regardless of whether or not such failure is permitted by this subpart.

*Primary beryllium production facility* means any establishment engaged in the chemical processing of beryllium ore to produce beryllium metal, alloy, or oxide, or performing any of the intermediate steps in these processes. A primary beryllium production facility may also be known as an extraction plant.

*Primary zinc production facility* means an installation engaged in the production, or any intermediate process in the production, of zinc or zinc oxide from zinc sulfide ore concentrates through the use of pyrometallurgical techniques.

*Responsible official* means responsible official as defined in 40 CFR 70.2.

*Roaster* means any facility in which a zinc sulfide ore concentrate charge is heated in the presence of air to eliminate a significant portion (more than 10 percent) of the sulfur contained in the charge.

*Sintering machine* means any furnace in which calcines are heated in the presence of air to agglomerate the calcines into a hard porous mass called sinter.

*Sulfuric acid plant* means any facility producing sulfuric acid from the sulfur dioxide ($SO_2$) in the gases from the roaster.

*Work practice standard* means any design, equipment, work practice, or operational standard, or combination thereof.

*Zinc cathode melting furnace* means any furnace used to melt the pure zinc from the electrolytic process.

### §63.11168 Who implements and enforces this subpart?

(a) This subpart can be implemented and enforced by the U.S. EPA or a delegated authority such as a State, local, or tribal agency. If the U.S. EPA Administrator has delegated authority to a State, local, or tribal agency, then that Agency has the authority to implement and enforce this subpart. You should contact your U.S. EPA Regional Office to find out if this subpart is delegated to your State, local, or tribal agency.

(b) In delegating implementation and enforcement authority of this subpart to a State, local, or tribal agency under 40 CFR part 63, subpart E, the authorities contained in paragraphs (c) and (d) of this section are retained by the Administrator of the U.S. EPA and are not transferred to the State, local, or tribal agency.

(c) For primary zinc production facilities subject to this subpart, the authorities that will not be delegated to State, local, or tribal agencies are listed in paragraphs (c)(1) through (5) of this section.

(1) Approval of an alternative non-opacity emissions standard under §63.6(g).

(2) Approval of an alternative opacity emissions standard under §63.6(h)(9).

(3) Approval of a major change to test methods under §63.7(e)(2)(ii) and (f). A ''major change to test method'' is defined in §63.90

(4) Approval of a major change to monitoring under §63.8(f). A ''major change to monitoring'' is defined in §63.90.

(5) Approval of a major change to recordkeeping/reporting under §63.10(f). A ''major change to recordkeeping/reporting'' is defined in §63.90.

(d) For primary beryllium manufacturing facilities subject to this subpart, the authorities that will not be delegated to State, local, or tribal agencies are listed in paragraphs (d)(1) through (4) of this section.

(1) Approval of an alternative non-opacity emissions standard under 40 CFR 61.12(d).

(2) Approval of a major change to test methods under 40 CFR 61.13(h). A ''major change to test method'' is defined in §63.90.

(3) Approval of a major change to monitoring under 40 CFR 61.14(g). A ''major change to monitoring'' is defined in §63.90.

(4) Approval of a major change to recordkeeping/reporting under 40 CFR 61.10. A ''major change to recordkeeping/reporting'' is defined in §63.90.

TABLE 1 TO SUBPART GGGGGG OF PART 63—APPLICABILITY OF GENERAL PROVISIONS TO PRIMARY ZINC PRODUCTION AREA SOURCES

As required in § 63.11164(a) and (b), you must comply with the requirements of the NESHAP General Provisions (40 CFR part 63, subpart A) as shown in the following table.

| Citation | Subject | Applies to subpart GGGGGG | Explanation |
|---|---|---|---|
| 63.1(a)(1), (a)(2), (a)(3), (a)(4), (a)(6), (a)(10)–(a)(12), (b)(1), (b)(3), (c)(1), (c)(2), (c)(5), (e). | Applicability | Yes. | |
| 63.1(a)(5), (a)(7)–(a)(9), (b)(2), (c)(3), (c)(4), (d). | Reserved | No. | |
| 63.2 | Definitions | Yes. | |
| 63.3 | Units and Abbreviations | Yes. | |
| 63.4 | Prohibited Activities and Circumvention. | Yes. | |
| 63.5 | Preconstruction Review and Notification Requirements. | No. | |
| 63.6(a), (b)(1)–(b)(5), (b)(7), (c)(1), (c)(2), (c)(5). | Compliance with Standards and Maintenance Requirements—Applicability Compliance Dates. | Yes. | |
| 63.6(e) | Operation and Maintenance Requirements. | Yes/No | Operation and maintenance requirements do not apply to existing sources except that the startup, shutdown, and malfunction requirements in § 63.6(e)(3) are allowed as an alternative to the rule requirements for emergency situations. Operation and maintenance requirements apply to new sources except that the rule requirements for emergency situations are allowed as an alternative to the startup, shutdown, and malfunction requirements in § 63.6(e)(3). |
| 63.6(f), (g), (i), (j) | Compliance with Nonopacity Emission Standards. | Yes. | |
| 63.6(b)(6), (c)(3), (c)(4), (d), (e)(2), (e)(3)(ii), (h)(3), (h)(5)(iv). | Reserved | No. | |
| 63.6(h)(1)–(h)(4), (h)(5)(i)–(h)(5)(iii), (h)(6)–(h)(9). | | Yes. | |
| 63.7(a), (e), (f), (g), (h) | Performance Testing Requirements. | Yes. | |
| 63.7(b), (c) | | Yes/No | Notification of performance tests and quality assurance program apply to new sources but not existing sources. |
| 63.8(a)(1), (a)(2), (b), (c), (f), (g) | Monitoring Requirements | Yes | Requirements in § 63.6(c)(4)(i)–(ii), (c)(5), (c)(6), (d), (e), (f)(6), and (g) apply if a COMS is used. |
| 63.8(a)(3) | Reserved | No. | |
| 63.8(a)(4) | | No | Subpart GGGGGG does not require flares. |
| 63.8(d), (e) | | Yes/No | Requirements for quality control program and performance evaluations apply to new sources but not existing sources. |
| 63.9(a), (b)(1), (b)(2), (b)(5), (c), (d), (f), (g), (h)(1)–(h)(3), (h)(5), (h)(6), (i), (j). | Notification Requirements | Yes/No | Notification of performance tests and opacity or visible emissions observations apply to new sources but not existing sources. |
| 63.9(b)(3), (h)(4) | Reserved | No. | |
| 63.9(b)(4) | | No. | |
| 63.10(a), (b)(1), (b)(2)(i)–(v), (d)(4), (d)(5)(i), (f). | Recordkeeping and Reporting Requirements. | Yes. | |

| Citation | Subject | Applies to subpart GGGGGG | Explanation |
|---|---|---|---|
| 63.10(b)(2), (b)(3), (c)(1), (c)(5)–(c)(8), (c)(10)–(c)(15), (d)(1)–(d)(3), (d)(5)(ii), (e)(1), (e)(2), (e)(4). | | Yes/No | Recordkeeping and reporting requirements apply to new sources but not existing sources. |
| 63.10(c)(2)–(c)(4), (c)(9) | Reserved | No. | |
| 63.10(e)(3) | | Yes/No | Reporting requirements apply to new sources but not existing sources. |
| 63.11 | Control Device Requirements | No | Subpart GGGGGG does not require flares. |
| 63.12 | State Authorities and Delegations. | Yes. | |
| 63.13 | Addresses | Yes. | |
| 63.14 | Incorporations by Reference | Yes. | |
| 63.15 | Availability of Information and Confidentiality. | Yes. | |
| 63.16 | Performance Track Provisions | Yes. | |

## Subpart HHHHHH—National Emission Standards for Hazardous Air Pollutants: Paint Stripping and Miscellaneous Surface Coating Operations at Area Sources

SOURCE: 73 FR 1759, Jan. 9, 2008, unless otherwise noted.

WHAT THIS SUBPART COVERS

### §63.11169 What is the purpose of this subpart?

Except as provided in paragraph (d) of this section, this subpart establishes national emission standards for hazardous air pollutants (HAP) for area sources involved in any of the activities in paragraphs (a) through (c) of this section. This subpart also establishes requirements to demonstrate initial and continuous compliance with the emission standards contained herein.

(a) Paint stripping operations that involve the use of chemical strippers that contain methylene chloride (MeCl), Chemical Abstract Service number 75092, in paint removal processes;

(b) Autobody refinishing operations that encompass motor vehicle and mobile equipment spray-applied surface coating operations;

(c) Spray application of coatings containing compounds of chromium (Cr), lead (Pb), manganese (Mn), nickel (Ni), or cadmium (Cd), collectively referred to as the target HAP to any part or product made of metal or plastic, or combinations of metal and plastic that are not motor vehicles or mobile equipment.

(d) This subpart does not apply to any of the activities described in paragraph (d)(1) through (6) of this section.

(1) Surface coating or paint stripping performed on site at installations owned or operated by the Armed Forces of the United States (including the Coast Guard and the National Guard of any such State), the National Aeronautics and Space Administration, or the National Nuclear Security Administration.

(2) Surface coating or paint stripping of military munitions, as defined in §63.11180, manufactured by or for the Armed Forces of the United States (including the Coast Guard and the National Guard of any such State) or equipment directly and exclusively used for the purposes of transporting military munitions.

(3) Surface coating or paint stripping performed by individuals on their personal vehicles, possessions, or property, either as a hobby or for maintenance of their personal vehicles, possessions, or property. This subpart also does not apply when these operations are performed by individuals for others without compensation. An individual who spray applies surface coating to more than two motor vehicles or pieces of mobile equipment per year is subject to the requirements in this subpart

that pertain to motor vehicle and mobile equipment surface coating regardless of whether compensation is received.

(4) Surface coating or paint stripping that meets the definition of ''research and laboratory activities'' in § 63.11180.

(5) Surface coating or paint stripping that meets the definition of ''quality control activities'' in § 63.11180.

(6) Surface coating or paint stripping activities that are covered under another area source NESHAP.

### § 63.11170 Am I subject to this subpart?

(a) You are subject to this subpart if you operate an area source of HAP as defined in paragraph (b) of this section, including sources that are part of a tribal, local, State, or Federal facility and you perform one or more of the activities in paragraphs (a)(1) through (3) of this section:

(1) Perform paint stripping using MeCl for the removal of dried paint (including, but not limited to, paint, enamel, varnish, shellac, and lacquer) from wood, metal, plastic, and other substrates.

(2) Perform spray application of coatings, as defined in § 63.11180, to motor vehicles and mobile equipment including operations that are located in stationary structures at fixed locations, and mobile repair and refinishing operations that travel to the customer's location, except spray coating applications that meet the definition of facility maintenance in § 63.11180. However, if you are the owner or operator of a motor vehicle or mobile equipment surface coating operation, you may petition the Administrator for an exemption from this subpart if you can demonstrate, to the satisfaction of the Administrator, that you spray apply no coatings that contain the target HAP, as defined in § 63.11180. Petitions must include a description of the coatings that you spray apply and your certification that you do not spray apply any coatings containing the target HAP. If circumstances change such that you intend to spray apply coatings containing the target HAP, you must submit the initial notification required by 63.11175 and comply with the requirements of this subpart.

(3) Perform spray application of coatings that contain the target HAP, as defined in § 63.11180, to a plastic and/or metal substrate on a part or product, except spray coating applications that meet the definition of facility maintenance or space vehicle in § 63.11180.

(b) An area source of HAP is a source of HAP that is not a major source of HAP, is not located at a major source, and is not part of a major source of HAP emissions. A major source of HAP emissions is any stationary source or group of stationary sources located within a contiguous area and under common control that emits or has the potential to emit any single HAP at a rate of 9.07 megagrams (Mg) (10 tons) or more per year, or emit any combination of HAP at a rate of 22.68 Mg (25 tons) or more per year.

### § 63.11171 How do I know if my source is considered a new source or an existing source?

(a) This subpart applies to each new and existing affected area source engaged in the activities listed in § 63.11170, with the exception of those activities listed in § 63.11169(d) of this subpart.

(b) The affected source is the collection of all of the items listed in paragraphs (b)(1) through (6) of this section. Not all affected sources will have all of the items listed in paragraphs (b)(1) through (6) of this section.

(1) Mixing rooms and equipment;

(2) Spray booths, ventilated prep stations, curing ovens, and associated equipment;

(3) Spray guns and associated equipment;

(4) Spray gun cleaning equipment;

(5) Equipment used for storage, handling, recovery, or recycling of cleaning solvent or waste paint; and

(6) Equipment used for paint stripping at paint stripping facilities using paint strippers containing MeCl.

(c) An affected source is a new source if it meets the criteria in paragraphs (c)(1) and (c)(2) of this section.

(1) You commenced the construction of the source after September 17, 2007 by installing new paint stripping or

surface coating equipment. If you purchase and install spray booths, enclosed spray gun cleaners, paint stripping equipment to reduce MeCl emissions, or purchase new spray guns to comply with this subpart at an existing source, these actions would not make your existing source a new source.

(2) The new paint stripping or surface coating equipment is used at a source that was not actively engaged in paint stripping and/or miscellaneous surface coating prior to September 17, 2007.

(d) An affected source is reconstructed if it meets the definition of reconstruction in §63.2.

(e) An affected source is an existing source if it is not a new source or a reconstructed source.

GENERAL COMPLIANCE REQUIREMENTS

### §63.11172 When do I have to comply with this subpart?

The date by which you must comply with this subpart is called the compliance date. The compliance date for each type of affected source is specified in paragraphs (a) and (b) of this section.

(a) For a new or reconstructed affected source, the compliance date is the applicable date in paragraph (a)(1) or (2) of this section:

(1) If the initial startup of your new or reconstructed affected source is after September 17, 2007, the compliance date is January 9, 2008.

(2) If the initial startup of your new or reconstructed affected source occurs after January 9, 2008, the compliance date is the date of initial startup of your affected source.

(b) For an existing affected source, the compliance date is January 10, 2011.

### §63.11173 What are my general requirements for complying with this subpart?

(a) Each paint stripping operation that is an affected area source must implement management practices to minimize the evaporative emissions of MeCl. The management practices must address, at a minimum, the practices in paragraphs (a)(1) through (5) of this section, as applicable, for your operations.

(1) Evaluate each application to ensure there is a need for paint stripping (e.g., evaluate whether it is possible to re-coat the piece without removing the existing coating).

(2) Evaluate each application where a paint stripper containing MeCl is used to ensure that there is no alternative paint stripping technology that can be used.

(3) Reduce exposure of all paint strippers containing MeCl to the air.

(4) Optimize application conditions when using paint strippers containing MeCl to reduce MeCl evaporation (e.g., if the stripper must be heated, make sure that the temperature is kept as low as possible to reduce evaporation).

(5) Practice proper storage and disposal of paint strippers containing MeCl (e.g., store stripper in closed, airtight containers).

(b) Each paint stripping operation that has annual usage of more than one ton of MeCl must develop and implement a written MeCl minimization plan to minimize the use and emissions of MeCl. The MeCl minimization plan must address, at a minimum, the management practices specified in paragraphs (a)(1) through (5) of this section, as applicable, for your operations. Each operation must post a placard or sign outlining the MeCl minimization plan in each area where paint stripping operations subject to this subpart occur. Paint stripping operations with annual usage of less than one ton of MeCl, must comply with the requirements in paragraphs (a)(1) through (5) of this section, as applicable, but are not required to develop and implement a written MeCl minimization plan.

(c) Each paint stripping operation must maintain copies of annual usage of paint strippers containing MeCl on site at all times.

(d) Each paint stripping operation with annual usage of more than one ton of MeCl must maintain a copy of their current MeCl minimization plan on site at all times.

(e) Each motor vehicle and mobile equipment surface coating operation and each miscellaneous surface coating operation must meet the requirements in paragraphs (e)(1) through (e)(5) of this section.

(1) All painters must be certified that they have completed training in the proper spray application of surface

coatings and the proper setup and maintenance of spray equipment. The minimum requirements for training and certification are described in paragraph (f) of this section. The spray application of surface coatings is prohibited by persons who are not certified as having completed the training described in paragraph (f) of this section. The requirements of this paragraph do not apply to the students of an accredited surface coating training program who are under the direct supervision of an instructor who meets the requirements of this paragraph.

(2) All spray-applied coatings must be applied in a spray booth, preparation station, or mobile enclosure that meets the requirements of paragraph (e)(2)(i) of this section and either paragraph (e)(2)(ii), (e)(2)(iii), or (e)(2)(iv) of this section.

(i) All spray booths, preparation stations, and mobile enclosures must be fitted with a type of filter technology that is demonstrated to achieve at least 98-percent capture of paint overspray. The procedure used to demonstrate filter efficiency must be consistent with the American Society of Heating, Refrigerating, and Air-Conditioning Engineers (ASHRAE) Method 52.1, ''Gravimetric and Dust-Spot Procedures for Testing Air-Cleaning Devices Used in General Ventilation for Removing Particulate Matter, June 4, 1992'' (incorporated by reference, see § 63.14 of subpart A of this part). The test coating for measuring filter efficiency shall be a high solids bake enamel delivered at a rate of at least 135 grams per minute from a conventional (non-HVLP) air-atomized spray gun operating at 40 pounds per square inch (psi) air pressure; the air flow rate across the filter shall be 150 feet per minute. Owners and operators may use published filter efficiency data provided by filter vendors to demonstrate compliance with this requirement and are not required to perform this measurement. The requirements of this paragraph do not apply to waterwash spray booths that are operated and maintained according to the manufacturer's specifications.

(ii) Spray booths and preparation stations used to refinish complete motor vehicles or mobile equipment must be fully enclosed with a full roof, and four complete walls or complete side curtains, and must be ventilated at negative pressure so that air is drawn into any openings in the booth walls or preparation station curtains. However, if a spray booth is fully enclosed and has seals on all doors and other openings and has an automatic pressure balancing system, it may be operated at up to, but not more than, 0.05 inches water gauge positive pressure.

(iii) Spray booths and preparation stations that are used to coat miscellaneous parts and products or vehicle subassemblies must have a full roof, at least three complete walls or complete side curtains, and must be ventilated so that air is drawn into the booth. The walls and roof of a booth may have openings, if needed, to allow for conveyors and parts to pass through the booth during the coating process.

(iv) Mobile ventilated enclosures that are used to perform spot repairs must enclose and, if necessary, seal against the surface around the area being coated such that paint overspray is retained within the enclosure and directed to a filter to capture paint overspray.

(3) All spray-applied coatings must be applied with a high volume, low pressure (HVLP) spray gun, electrostatic application, airless spray gun, air-assisted airless spray gun, or an equivalent technology that is demonstrated by the spray gun manufacturer to achieve transfer efficiency comparable to one of the spray gun technologies listed above for a comparable operation, and for which written approval has been obtained from the Administrator. The procedure used to demonstrate that spray gun transfer efficiency is equivalent to that of an HVLP spray gun must be equivalent to the California South Coast Air Quality Management District's ''Spray Equipment Transfer Efficiency Test Procedure for Equipment User, May 24, 1989'' and ''Guidelines for Demonstrating Equivalency with District Approved Transfer Efficient Spray Guns, September 26, 2002'' (incorporated by reference, see § 63.14 of subpart A of this part). The requirements of this paragraph do not apply to painting performed by students and instructors at

paint training centers. The requirements of this paragraph do not apply to the surface coating of aerospace vehicles that involves the coating of components that normally require the use of an airbrush or an extension on the spray gun to properly reach limited access spaces; to the application of coatings on aerospace vehicles that contain fillers that adversely affect atomization with HVLP spray guns; or to the application of coatings on aerospace vehicles that normally have a dried film thickness of less than 0.0013 centimeter (0.0005 in.).

(4) All paint spray gun cleaning must be done so that an atomized mist or spray of gun cleaning solvent and paint residue is not created outside of a container that collects used gun cleaning solvent. Spray gun cleaning may be done with, for example, hand cleaning of parts of the disassembled gun in a container of solvent, by flushing solvent through the gun without atomizing the solvent and paint residue, or by using a fully enclosed spray gun washer. A combination of non-atomizing methods may also be used.

(5) As provided in §63.6(g), we, the U.S. Environmental Protection Agency, may choose to grant you permission to use an alternative to the emission standards in this section after you have requested approval to do so according to §63.6(g)(2).

(f) Each owner or operator of an affected miscellaneous surface coating source must ensure and certify that all new and existing personnel, including contract personnel, who spray apply surface coatings, as defined in §63.11180, are trained in the proper application of surface coatings as required by paragraph (e)(1) of this section. The training program must include, at a minimum, the items listed in paragraphs (f)(1) through (f)(3) of this section.

(1) A list of all current personnel by name and job description who are required to be trained;

(2) Hands-on and classroom instruction that addresses, at a minimum, initial and refresher training in the topics listed in paragraphs (f)(2)(i) through (2)(iv) of this section.

(i) Spray gun equipment selection, set up, and operation, including measuring coating viscosity, selecting the proper fluid tip or nozzle, and achieving the proper spray pattern, air pressure and volume, and fluid delivery rate.

(ii) Spray technique for different types of coatings to improve transfer efficiency and minimize coating usage and overspray, including maintaining the correct spray gun distance and angle to the part, using proper banding and overlap, and reducing lead and lag spraying at the beginning and end of each stroke.

(iii) Routine spray booth and filter maintenance, including filter selection and installation.

(iv) Environmental compliance with the requirements of this subpart.

(3) A description of the methods to be used at the completion of initial or refresher training to demonstrate, document, and provide certification of successful completion of the required training. Owners and operators who can show by documentation or certification that a painter's work experience and/or training has resulted in training equivalent to the training required in paragraph (f)(2) of this section are not required to provide the initial training required by that paragraph to these painters.

(g) As required by paragraph (e)(1) of this section, all new and existing personnel at an affected motor vehicle and mobile equipment or miscellaneous surface coating source, including contract personnel, who spray apply surface coatings, as defined in §63.11180, must be trained by the dates specified in paragraphs (g)(1) and (2) of this section. Employees who transfer within a company to a position as a painter are subject to the same requirements as a new hire.

(1) If your source is a new source, all personnel must be trained and certified no later than 180 days after hiring or no later than July 7, 2008, whichever is later. Painter training that was completed within five years prior to the date training is required, and that meets the requirements specified in paragraph (f)(2) of this section satisfies this requirement and is valid for a period not to exceed five years after the date the training is completed.

(2) If your source is an existing source, all personnel must be trained and certified no later than 180 days after hiring or no later than January 10, 2011, whichever is later. Painter training that was completed within five years prior to the date training is required, and that meets the requirements specified in paragraph (f)(2) of this section satisfies this requirement and is valid for a period not to exceed five years after the date the training is completed.

(3) Training and certification will be valid for a period not to exceed five years after the date the training is completed, and all personnel must receive refresher training that meets the requirements of this section and be recertified every five years.

[73 FR 1760, Jan. 9, 2008; 73 FR 8408, Feb. 13, 2008]

### § 63.11174 What parts of the General Provisions apply to me?

(a) Table 1 of this subpart shows which parts of the General Provisions in subpart A apply to you.

(b) If you are an owner or operator of an area source subject to this subpart, you are exempt from the obligation to obtain a permit under 40 CFR part 70 or 71, provided you are not required to obtain a permit under 40 CFR 70.3(a) or 71.3(a) for a reason other than your status as an area source under this subpart. Notwithstanding the previous sentence, you must continue to comply with the provisions of this subpart applicable to area sources.

NOTIFICATIONS, REPORTS, AND RECORDS

### § 63.11175 What notifications must I submit?

(a) *Initial notification*. If you are the owner or operator of a paint stripping operation using paint strippers containing MeCl and/or a surface coating operation subject to this subpart, you must submit the initial notification required by § 63.9(b). For a new affected source, you must submit the Initial Notification no later than 180 days after initial startup, or no later than 120 days after the source becomes subject to this subpart, or July 7, 2008, whichever is later. For an existing affected source, you must submit the initial notification no later than January 11, 2010, or no later than 120 days after the source becomes subject to this subpart. The initial notification must provide the information specified in paragraphs (a)(1) through (8) of this section.

(1) The company name, if applicable.

(2) The name, title, street address, telephone number, e-mail address (if available), and signature of the owner and operator, or other certifying company official;

(3) The street address (physical location) of the affected source and the street address where compliance records are maintained, if different. If the source is a motor vehicle or mobile equipment surface coating operation that repairs vehicles at the customer's location, rather than at a fixed location, such as a collision repair shop, the notification should state this and indicate the physical location where records are kept to demonstrate compliance;

(4) An identification of the relevant standard (i.e., this subpart, 40 CFR part 63, subpart HHHHHH);

(5) A brief description of the type of operation as specified in paragraph (a)(5)(i) or (ii) of this section.

(i) For all surface coating operations, indicate whether the source is a motor vehicle and mobile equipment surface coating operation or a miscellaneous surface coating operation, and include the number of spray booths and preparation stations, and the number of painters usually employed at the operation.

(ii) For paint stripping operations, identify the method(s) of paint stripping employed (e.g., chemical, mechanical) and the substrates stripped (e.g., wood, plastic, metal).

(6) Each paint stripping operation must indicate whether they plan to annually use more than one ton of MeCl after the compliance date.

(7) A statement of whether the source is already in compliance with each of the relevant requirements of this subpart, or whether the source will be brought into compliance by the compliance date. For paint stripping operations, the relevant requirements that you must evaluate in making this determination are specified in § 63.11173(a) through (d) of this subpart. For surface

coating operations, the relevant requirements are specified in §63.11173(e) through (g) of this subpart.

(8) If your source is a new source, you must certify in the initial notification whether the source is in compliance with each of the requirements of this subpart. If your source is an existing source, you may certify in the initial notification that the source is already in compliance. If you are certifying in the initial notification that the source is in compliance with the relevant requirements of this subpart, then include also a statement by a responsible official with that official's name, title, phone number, e-mail address (if available) and signature, certifying the truth, accuracy, and completeness of the notification, a statement that the source has complied with all the relevant standards of this subpart, and that this initial notification also serves as the notification of compliance status.

(b) *Notification of compliance status*. If you are the owner or operator of a new source, you are not required to submit a separate notification of compliance status in addition to the initial notification specified in paragraph (a) of this subpart provided you were able to certify compliance on the date of the initial notification, as part of the initial notification, and your compliance status has not since changed. If you are the owner or operator of any existing source and did not certify in the initial notification that your source is already in compliance as specified in paragraph (a) of this section, then you must submit a notification of compliance status. You must submit a Notification of Compliance Status on or before March 11, 2011. You are required to submit the information specified in paragraphs (b)(1) through (4) of this section with your Notification of Compliance Status:

(1) Your company's name and the street address (physical location) of the affected source and the street address where compliance records are maintained, if different.

(2) The name, title, address, telephone, e-mail address (if available) and signature of the owner and operator, or other certifying company official, certifying the truth, accuracy, and completeness of the notification and a statement of whether the source has complied with all the relevant standards and other requirements of this subpart or an explanation of any noncompliance and a description of corrective actions being taken to achieve compliance. For paint stripping operations, the relevant requirements that you must evaluate in making this determination are specified in §63.11173(a) through (d). For surface coating operations, the relevant requirements are specified in §63.11173(e) through (g).

(3) The date of the Notification of Compliance Status.

(4) If you are the owner or operator of an existing affected paint stripping source that annually uses more than one ton of MeCl, you must submit a statement certifying that you have developed and are implementing a written MeCl minimization plan in accordance with §63.11173(b).

[73 FR 1759, Jan. 9, 2008, as amended at 85 FR 73920, Nov. 19, 2020]

### §63.11176 What reports must I submit?

(a) *Annual notification of changes report*. If you are the owner or operator of a paint stripping, motor vehicle or mobile equipment, or miscellaneous surface coating affected source, you are required to submit a report in each calendar year in which information previously submitted in either the initial notification required by §63.11175(a), Notification of Compliance, or a previous annual notification of changes report submitted under this paragraph, has changed. Deviations from the relevant requirements in §63.11173(a) through (d) or §63.11173(e) through (g) on the date of the report will be deemed to be a change. This includes notification when paint stripping affected sources that have not developed and implemented a written MeCl minimization plan in accordance with §63.11173(b) used more than one ton of MeCl in the previous calendar year. The annual notification of changes report must be submitted prior to March 1 of each calendar year when reportable changes have occurred and must include the information specified in paragraphs (a)(1) through (2) of this section.

(1) Your company's name and the street address (physical location) of the

affected source and the street address where compliance records are maintained, if different.

(2) The name, title, address, telephone, e-mail address (if available) and signature of the owner and operator, or other certifying company official, certifying the truth, accuracy, and completeness of the notification and a statement of whether the source has complied with all the relevant standards and other requirements of this subpart or an explanation of any noncompliance and a description of corrective actions being taken to achieve compliance.

(b) If you are the owner or operator of a paint stripping affected source that has not developed and implemented a written MeCl minimization plan in accordance with § 63.11173(b) of this subpart, you must submit a report for any calendar year in which you use more than one ton of MeCl. This report must be submitted no later than March 1 of the following calendar year. You must also develop and implement a written MeCl minimization plan in accordance with § 63.11173(b) no later than December 31. You must then submit a Notification of Compliance Status report containing the information specified in § 63.11175(b) by March 1 of the following year and comply with the requirements for paint stripping operations that annually use more than one ton of MeCl in §§ 63.11173(d) and 63.11177(f).

### § 63.11177 What records must I keep?

If you are the owner or operator of a surface coating operation, you must keep the records specified in paragraphs (a) through (d) and (g) of this section. If you are the owner or operator of a paint stripping operation, you must keep the records specified in paragraphs (e) through (g) of this section, as applicable.

(a) Certification that each painter has completed the training specified in § 63.11173(f) with the date the initial training and the most recent refresher training was completed.

(b) Documentation of the filter efficiency of any spray booth exhaust filter material, according to the procedure in § 63.11173(e)(3)(i).

(c) Documentation from the spray gun manufacturer that each spray gun with a cup capacity equal to or greater than 3.0 fluid ounces (89 cc) that does not meet the definition of an HVLP spray gun, electrostatic application, airless spray gun, or air assisted airless spray gun, has been determined by the Administrator to achieve a transfer efficiency equivalent to that of an HVLP spray gun, according to the procedure in § 63.11173(e)(4).

(d) Copies of any notification submitted as required by § 63.11175 and copies of any report submitted as required by § 63.11176.

(e) Records of paint strippers containing MeCl used for paint stripping operations, including the MeCl content of the paint stripper used. Documentation needs to be sufficient to verify annual usage of paint strippers containing MeCl (e.g., material safety data sheets or other documentation provided by the manufacturer or supplier of the paint stripper, purchase receipts, records of paint stripper usage, engineering calculations).

(f) If you are a paint stripping source that annually uses more than one ton of MeCl you are required to maintain a record of your current MeCl minimization plan on site for the duration of your paint stripping operations. You must also keep records of your annual review of, and updates to, your MeCl minimization plan.

(g) Records of any deviation from the requirements in § 63.11173, § 63.11174, § 63.11175, or § 63.11176. These records must include the date and time period of the deviation, and a description of the nature of the deviation and the actions taken to correct the deviation.

(h) Records of any assessments of source compliance performed in support of the initial notification, notification of compliance status, or annual notification of changes report.

### § 63.11178 In what form and for how long must I keep my records?

(a) If you are the owner or operator of an affected source, you must maintain copies of the records specified in § 63.11177 for a period of at least five years after the date of each record. Copies of records must be kept on site and in a printed or electronic form that

is readily accessible for inspection for at least the first two years after their date, and may be kept off-site after that two year period.

OTHER REQUIREMENTS AND INFORMATION

### §63.11179 Who implements and enforces this subpart?

(a) This subpart can be implemented and enforced by us, the U.S. Environmental Protection Agency (EPA), or a delegated authority such as your State, local, or tribal agency. If the Administrator has delegated authority to your State, local, or tribal agency, then that agency (as well as the EPA) has the authority to implement and enforce this subpart. You should contact your EPA Regional Office to find out if implementation and enforcement of this subpart is delegated to your State, local, or tribal agency.

(b) In delegating implementation and enforcement authority of this subpart to a State, local, or tribal agency under subpart E of this part, the authorities contained in paragraph (c) of this section are retained by the Administrator and are not transferred to the State, local, or tribal agency.

(c) The authority in §63.11173(e)(5) will not be delegated to State, local, or tribal agencies.

### §63.11180 What definitions do I need to know?

Terms used in this subpart are defined in the Clean Air Act, in 40 CFR 63.2, and in this section as follows:

*Additive* means a material that is added to a coating after purchase from a supplier (e.g., catalysts, activators, accelerators).

*Administrator* means, for the purposes of this rulemaking, the Administrator of the U.S. Environmental Protection Agency or the State or local agency that is granted delegation for implementation of this subpart.

*Aerospace vehicle or component* means any fabricated part, processed part, assembly of parts, or completed unit, with the exception of electronic components, of any aircraft including but not limited to airplanes, helicopters, missiles, rockets, and space vehicles.

*Airless and air-assisted airless spray* mean any paint spray technology that relies solely on the fluid pressure of the paint to create an atomized paint spray pattern and does not apply any atomizing compressed air to the paint before it leaves the paint nozzle. Air-assisted airless spray uses compressed air to shape and distribute the fan of atomized paint, but still uses fluid pressure to create the atomized paint.

*Appurtenance* means any accessory to a stationary structure coated at the site of installation, whether installed or detached, including but not limited to: bathroom and kitchen fixtures; cabinets; concrete forms; doors; elevators; fences; hand railings; heating equipment, air conditioning equipment, and other fixed mechanical equipment or stationary tools; lamp posts; partitions; pipes and piping systems; rain gutters and downspouts; stairways, fixed ladders, catwalks, and fire escapes; and window screens.

*Architectural coating* means a coating to be applied to stationary structures or their appurtenances at the site of installation, to portable buildings at the site of installation, to pavements, or to curbs.

*Cleaning material* means a solvent used to remove contaminants and other materials, such as dirt, grease, or oil, from a substrate before or after coating application or from equipment associated with a coating operation, such as spray booths, spray guns, racks, tanks, and hangers. Thus, it includes any cleaning material used on substrates or equipment or both.

*Coating* means, for the purposes of this subpart, a material spray-applied to a substrate for decorative, protective, or functional purposes. For the purposes of this subpart, coating does not include the following materials:

(1) Decorative, protective, or functional materials that consist only of protective oils for metal, acids, bases, or any combination of these substances.

(2) Paper film or plastic film that may be pre-coated with an adhesive by the film manufacturer.

(3) Adhesives, sealants, maskants, or caulking materials.

(4) Temporary protective coatings, lubricants, or surface preparation materials.

(5) In-mold coatings that are spray-applied in the manufacture of reinforced plastic composite parts.

*Compliance date* means the date by which you must comply with this subpart.

*Deviation* means any instance in which an affected source, subject to this subpart, or an owner or operator of such a source fails to meet any requirement or obligation established by this subpart.

*Dry media blasting* means abrasive blasting using dry media. Dry media blasting relies on impact and abrasion to remove paint from a substrate. Typically, a compressed air stream is used to propel the media against the coated surface.

*Electrostatic application* means any method of coating application where an electrostatic attraction is created between the part to be coated and the atomized paint particles.

*Equipment cleaning* means the use of an organic solvent to remove coating residue from the surfaces of paint spray guns and other painting related equipment, including, but not limited to stir sticks, paint cups, brushes, and spray booths.

*Facility maintenance* means, for the purposes of this subpart, surface coating performed as part of the routine repair or renovation of the tools, equipment, machinery, and structures that comprise the infrastructure of the affected facility and that are necessary for the facility to function in its intended capacity. *Facility maintenance* also includes surface coating associated with the installation of new equipment or structures, and the application of any surface coating as part of janitorial activities. *Facility maintenance* includes the application of coatings to stationary structures or their appurtenances at the site of installation, to portable buildings at the site of installation, to pavements, or to curbs. *Facility maintenance* also includes the refinishing of mobile equipment in the field or at the site where they are used in service and at which they are intended to remain indefinitely after refinishing. Such mobile equipment includes, but is not limited to, farm equipment and mining equipment for which it is not practical or feasible to move to a dedicated mobile equipment refinishing facility. Such mobile equipment also includes items, such as fork trucks, that are used in a manufacturing facility and which are refinished in that same facility. *Facility maintenance* does not include surface coating of motor vehicles, mobile equipment, or items that routinely leave and return to the facility, such as delivery trucks, rental equipment, or containers used to transport, deliver, distribute, or dispense commercial products to customers, such as compressed gas canisters.

*High-volume, low-pressure (HVLP) spray equipment* means spray equipment that is permanently labeled as such and used to apply any coating by means of a spray gun which is designed and operated between 0.1 and 10 pounds per square inch gauge (psig) air atomizing pressure measured dynamically at the center of the air cap and at the air horns.

*Initial startup* means the first time equipment is brought online in a paint stripping or surface coating operation, and paint stripping or surface coating is first performed.

*Materials that contain HAP* or *HAP-containing materials* mean, for the purposes of this subpart, materials that contain 0.1 percent or more by mass of any individual HAP that is an OSHA-defined carcinogen as specified in 29 CFR 1910.1200(d)(4), or 1.0 percent or more by mass for any other individual HAP.

*Military munitions* means all ammunition products and components produced or used by or for the U.S. Department of Defense (DoD) or for the U.S. Armed Services for national defense and security, including military munitions under the control of the Department of Defense, the U.S. Coast Guard, the National Nuclear Security Administration (NNSA), U.S. Department of Energy (DOE), and National Guard personnel. The term military munitions includes: confined gaseous, liquid, and solid propellants, explosives, pyrotechnics, chemical and riot control agents, smokes, and incendiaries used by DoD components, including bulk explosives and chemical warfare agents, chemical munitions, biological weapons, rockets, guided and

ballistic missiles, bombs, warheads, mortar rounds, artillery ammunition, small arms ammunition, grenades, mines, torpedoes, depth charges, cluster munitions and dispensers, demolition charges, nonnuclear components of nuclear weapons, wholly inert ammunition products, and all devices and components of any items listed in this definition.

*Miscellaneous parts and/or products* means any part or product made of metal or plastic, or combinations of metal and plastic. Miscellaneous parts and/or products include, but are not limited to, metal and plastic components of the following types of products as well as the products themselves: motor vehicle parts and accessories for automobiles, trucks, recreational vehicles; automobiles and light duty trucks at automobile and light duty truck assembly plants; boats; sporting and recreational goods; toys; business machines; laboratory and medical equipment; and household and other consumer products.

*Miscellaneous surface coating operation* means the collection of equipment used to apply surface coating to miscellaneous parts and/or products made of metal or plastic, including applying cleaning solvents to prepare the surface before coating application, mixing coatings before application, applying coating to a surface, drying or curing the coating after application, and cleaning coating application equipment, but not plating. A single surface coating operation may include any combination of these types of equipment, but always includes at least the point at which a coating material is applied to a given part. A surface coating operation includes all other steps (such as surface preparation with solvent and equipment cleaning) in the affected source where HAP are emitted from the coating of a part. The use of solvent to clean parts (for example, to remove grease during a mechanical repair) does not constitute a miscellaneous surface coating operation if no coatings are applied. A single affected source may have multiple surface coating operations. Surface coatings applied to wood, leather, rubber, ceramics, stone, masonry, or substrates other than metal and plastic are not considered miscellaneous surface coating operations for the purposes of this subpart.

*Mobile equipment* means any device that may be drawn and/or driven on a roadway including, but not limited to, heavy-duty trucks, truck trailers, fleet delivery trucks, buses, mobile cranes, bulldozers, street cleaners, agriculture equipment, motor homes, and other recreational vehicles (including camping trailers and fifth wheels).

*Motor vehicle* means any self-propelled vehicle, including, but not limited to, automobiles, light duty trucks, golf carts, vans, and motorcycles.

*Motor vehicle and mobile equipment surface coating* means the spray application of coatings to assembled motor vehicles or mobile equipment. For the purposes of this subpart, it does not include the surface coating of motor vehicle or mobile equipment parts or subassemblies at a vehicle assembly plant or parts manufacturing plant.

*Non-HAP solvent* means, for the purposes of this subpart, a solvent (including thinners and cleaning solvents) that contains less than 0.1 percent by mass of any individual HAP that is an OSHA-defined carcinogen as specified in 29 CFR 1910.1200(d)(4) and less than 1.0 percent by mass for any other individual HAP.

*Paint stripping and/or miscellaneous surface coating source or facility* means any shop, business, location, or parcel of land where paint stripping or miscellaneous surface coating operations are conducted.

*Paint stripping* means the removal of dried coatings from wood, metal, plastic, and other substrates. A single affected source may have multiple paint stripping operations.

*Painter* means any person who spray applies coating.

*Plastic* refers to substrates containing one or more resins and may be solid, porous, flexible, or rigid. Plastics include fiber reinforced plastic composites.

*Protective oil* means organic material that is applied to metal for the purpose of providing lubrication or protection from corrosion without forming a solid film. This definition of protective oil includes, but is not limited to, lubricating oils, evaporative oils (including

those that evaporate completely), and extrusion oils.

*Quality control activities* means surface coating or paint stripping activities that meet all of the following criteria:

(1) The activities associated with a surface coating or paint stripping operation are intended to detect and correct defects in the final product by selecting a limited number of samples from the operation, and comparing the samples against specific performance criteria.

(2) The activities do not include the production of an intermediate or final product for sale or exchange for commercial profit; for example, parts that are surface coated or stripped are not sold and do not leave the facility.

(3) The activities are not a normal part of the surface coating or paint stripping operation; for example, they do not include color matching activities performed during a motor vehicle collision repair.

(4) The activities do not involve surface coating or stripping of the tools, equipment, machinery, and structures that comprise the infrastructure of the affected facility and that are necessary for the facility to function in its intended capacity; that is, the activities are not facility maintenance.

*Research and laboratory activities* means surface coating or paint stripping activities that meet one of the following criteria:

(1) Conducted at a laboratory to analyze air, soil, water, waste, or product samples for contaminants, or environmental impact.

(2) Activities conducted to test more efficient production processes, including alternative paint stripping or surface coating materials or application methods, or methods for preventing or reducing adverse environmental impacts, provided that the activities do not include the production of an intermediate or final product for sale or exchange for commercial profit.

(3) Activities conducted at a research or laboratory facility that is operated under the close supervision of technically trained personnel, the primary purpose of which is to conduct research and development into new processes and products and that is not engaged in the manufacture of products for sale or exchange for commercial profit.

*Solvent* means a fluid containing organic compounds used to perform paint stripping, surface prep, or cleaning of surface coating equipment.

*Space Vehicle* means vehicles designed to travel beyond the limit of the earth's atmosphere, including but not limited to satellites, space stations, and the Space Shuttle System (including orbiter, external tanks, and solid rocket boosters).

*Spray-applied coating operations* means coatings that are applied using a hand-held device that creates an atomized mist of coating and deposits the coating on a substrate. For the purposes of this subpart, spray-applied coatings do not include the following materials or activities:

(1) Coatings applied from a hand-held device with a paint cup capacity that is equal to or less than 3.0 fluid ounces (89 cubic centimeters).

(2) Surface coating application using powder coating, hand-held, non-refillable aerosol containers, or non-atomizing application technology, including, but not limited to, paint brushes, rollers, hand wiping, flow coating, dip coating, electrodeposition coating, web coating, coil coating, touch-up markers, or marking pens.

(3) Thermal spray operations (also known as metallizing, flame spray, plasma arc spray, and electric arc spray, among other names) in which solid metallic or non-metallic material is heated to a molten or semi-molten state and propelled to the work piece or substrate by compressed air or other gas, where a bond is produced upon impact.

*Surface preparation* or *Surface prep* means use of a cleaning material on a portion of or all of a substrate prior to the application of a coating.

*Target HAP* are compounds of chromium (Cr), lead (Pb), manganese (Mn), nickel (Ni), or cadmium (Cd).

*Target HAP containing coating* means a spray-applied coating that contains any individual target HAP that is an Occupational Safety and Health Administration (OSHA)–defined carcinogen as specified in 29 CFR 1910.1200(d)(4) at a concentration greater than 0.1 percent by mass, or greater

than 1.0 percent by mass for any other individual target HAP compound. For the purpose of determining whether materials you use contain the target HAP compounds, you may rely on formulation data provided by the manufacturer or supplier, such as the material safety data sheet (MSDS), as long as it represents each target HAP compound in the material that is present at 0.1 percent by mass or more for OSHA-defined carcinogens as specified in 29 CFR 1910.1200(d)(4) and at 1.0 percent by mass or more for other target HAP compounds.

*Transfer efficiency* means the amount of coating solids adhering to the object being coated divided by the total amount of coating solids sprayed, expressed as a percentage. Coating solids means the nonvolatile portion of the coating that makes up the dry film.

*Truck bed liner coating* means any coating, excluding color coats, labeled and formulated for application to a truck bed to protect it from surface abrasion.

TABLE 1 TO SUBPART HHHHHH OF PART 63—APPLICABILITY OF GENERAL PROVISIONS TO SUBPART HHHHHH OF PART 63

| Citation | Subject | Applicable to subpart HHHHHH | Explanation |
|---|---|---|---|
| § 63.1(a)(1)–(12) | General Applicability | Yes. | |
| § 63.1(b)(1)–(3) | Initial Applicability Determination | Yes | Applicability of subpart HHHHHH is also specified in § 63.11170. |
| § 63.1(c)(1) | Applicability After Standard Established. | Yes. | |
| § 63.1(c)(2) | Applicability of Permit Program for Area Sources. | Yes | (63.11174(b) of Subpart HHHHHH exempts area sources from the obligation to obtain Title V operating permits. |
| § 63.1(c)(5) | Notifications | Yes. | |
| § 63.1(e) | Applicability of Permit Program to Major Sources Before Relevant Standard is Set. | No | (63.11174(b) of Subpart HHHHHH exempts area sources from the obligation to obtain Title V operating permits. |
| § 63.2 | Definitions | Yes | Additional definitions are specified in § 63.11180. |
| § 63.3(a)–(c) | Units and Abbreviations | Yes. | |
| § 63.4(a)(1)–(5) | Prohibited Activities | Yes. | |
| § 63.4(b)–(c) | Circumvention/Fragmentation | Yes. | |
| § 63.5 | Construction/Reconstruction of major sources. | No | Subpart HHHHHH applies only to area sources. |
| § 63.6(a) | Compliance With Standards and Maintenance Requirements—Applicability. | Yes. | |
| § 63.6(b)(1)–(7) | Compliance Dates for New and Reconstructed Sources. | Yes | § 63.11172 specifies the compliance dates. |
| § 63.6(c)(1)–(5) | Compliance Dates for Existing Sources. | Yes | § 63.11172 specifies the compliance dates. |
| § 63.6(e)(1)–(2) | Operation and Maintenance | Yes. | |
| § 63.6(e)(3) | Startup, Shutdown, and Malfunction Plan. | No | No startup, shutdown, and malfunction plan is required by subpart HHHHHH. |
| § 63.6(f)(1) | Compliance Except During Startup, Shutdown, and Malfunction. | Yes. | |
| § 63.6(f)(2)–(3) | Methods for Determining Compliance. | Yes. | |
| § 63.6(g)(1)–(3) | Use of an Alternative Standard | Yes. | |
| § 63.6(h) | Compliance With Opacity/Visible Emission Standards. | No | Subpart HHHHHH does not establish opacity or visible emission standards. |
| § 63.6(i)(1)–(16) | Extension of Compliance | Yes. | |
| § 63.6(j) | Presidential Compliance Exemption. | Yes. | |
| § 63.7 | Performance Testing Requirements. | No | No performance testing is required by subpart HHHHHH. |

| Citation | Subject | Applicable to subpart HHHHHH | Explanation |
|---|---|---|---|
| § 63.8 | Monitoring Requirements | No | Subpart HHHHHH does not require the use of continuous monitoring systems. |
| § 63.9(a)–(d) | Notification Requirements | Yes | § 63.11175 specifies notification requirements. |
| § 63.9(e) | Notification of Performance Test | No | Subpart HHHHHH does not require performance tests. |
| § 63.9(f) | Notification of Visible Emissions/Opacity Test. | No | Subpart HHHHHH does not have opacity or visible emission standards. |
| § 63.9(g) | Additional Notifications When Using CMS. | No | Subpart HHHHHH does not require the use of continuous monitoring systems. |
| § 63.9(h) | Notification of Compliance Status. | No | § 63.11175 specifies the dates and required content for submitting the notification of compliance status. |
| § 63.9(i) | Adjustment of Submittal Deadlines. | Yes. | |
| § 63.9(j) | Change in Previous Information | Yes | § 63.11176(a) specifies the dates for submitting the notification of changes report. |
| § 63.9(k) | Electronic reporting procedures | Yes | Only as specified in § 63.9(j). |
| § 63.10(a) | Recordkeeping/Reporting—Applicability and General Information. | Yes. | |
| § 63.10(b)(1) | General Recordkeeping Requirements. | Yes | Additional requirements are specified in § 63.11177. |
| § 63.10(b)(2)(i)–(xi) | Recordkeeping Relevant to Startup, Shutdown, and Malfunction Periods and CMS. | No | Subpart HHHHHH does not require startup, shutdown, and malfunction plans, or CMS. |
| § 63.10(b)(2)(xii) | Waiver of recordkeeping requirements. | Yes. | |
| § 63.10(b)(2)(xiii) | Alternatives to the relative accuracy test. | No | Subpart HHHHHH does not require the use of CEMS. |
| § 63.10(b)(2)(xiv) | Records supporting notifications | Yes. | |
| § 63.10(b)(3) | Recordkeeping Requirements for Applicability Determinations. | Yes. | |
| § 63.10(c) | Additional Recordkeeping Requirements for Sources with CMS. | No | Subpart HHHHHH does not require the use of CMS. |
| § 63.10(d)(1) | General Reporting Requirements. | Yes | Additional requirements are specified in § 63.11176. |
| § 63.10(d)(2)–(3) | Report of Performance Test Results, and Opacity or Visible Emissions Observations. | No | Subpart HHHHHH does not require performance tests, or opacity or visible emissions observations. |
| § 63.10(d)(4) | Progress Reports for Sources With Compliance Extensions. | Yes. | |
| § 63.10(d)(5) | Startup, Shutdown, and Malfunction Reports. | No | Subpart HHHHHH does not require startup, shutdown, and malfunction reports. |
| § 63.10(e) | Additional Reporting requirements for Sources with CMS. | No | Subpart HHHHHH does not require the use of CMS. |
| § 63.10(f) | Recordkeeping/Reporting Waiver. | Yes. | |
| § 63.11 | Control Device Requirements/Flares. | No | Subpart HHHHHH does not require the use of flares. |
| § 63.12 | State Authority and Delegations | Yes. | |
| § 63.13 | Addresses of State Air Pollution Control Agencies and EPA Regional Offices. | Yes. | |
| § 63.14 | Incorporation by Reference | Yes | Test methods for measuring paint booth filter efficiency and spray gun transfer efficiency in § 63.11173(e)(2) and (3) are incorporated and included in § 63.14. |
| § 63.15 | Availability of Information/Confidentiality. | Yes. | |
| § 63.16(a) | Performance Track Provisions—reduced reporting. | Yes. | |

| Citation | Subject | Applicable to subpart HHHHHH | Explanation |
|---|---|---|---|
| §63.16(b)–(c) | Performance Track Provisions—reduced reporting. | No | Subpart HHHHHH does not establish numerical emission limits. |

[73 FR 1759, Jan. 9, 2008, as amended at 85 FR 73920, Nov. 19, 2020]

## Subpart IIIIII [Reserved]

## Subpart JJJJJJ—National Emission Standards for Hazardous Air Pollutants for Industrial, Commercial, and Institutional Boilers Area Sources

SOURCE: 76 FR 15591, Mar. 21, 2011, unless otherwise noted.

WHAT THIS SUBPART COVERS

### §63.11193 Am I subject to this subpart?

You are subject to this subpart if you own or operate an industrial, commercial, or institutional boiler as defined in §63.11237 that is located at, or is part of, an area source of hazardous air pollutants (HAP), as defined in §63.2, except as specified in §63.11195.

### §63.11194 What is the affected source of this subpart?

(a) This subpart applies to each new, reconstructed, or existing affected source as defined in paragraphs (a)(1) and (2) of this section.

(1) The affected source of this subpart is the collection of all existing industrial, commercial, and institutional boilers within a subcategory, as listed in §63.11200 and defined in §63.11237, located at an area source.

(2) The affected source of this subpart is each new or reconstructed industrial, commercial, or institutional boiler within a subcategory, as listed in §63.11200 and as defined in §63.11237, located at an area source.

(b) An affected source is an existing source if you commenced construction or reconstruction of the affected source on or before June 4, 2010.

(c) An affected source is a new source if you commenced construction of the affected source after June 4, 2010, and the boiler meets the applicability criteria at the time you commence construction.

(d) An affected source is a reconstructed source if the boiler meets the reconstruction criteria as defined in §63.2, you commenced reconstruction after June 4, 2010, and the boiler meets the applicability criteria at the time you commence reconstruction.

(e) An existing dual-fuel fired boiler meeting the definition of gas-fired boiler, as defined in §63.11237, that meets the applicability requirements of this subpart after June 4, 2010 due to a fuel switch from gaseous fuel to solid fossil fuel, biomass, or liquid fuel is considered to be an existing source under this subpart as long as the boiler was designed to accommodate the alternate fuel.

(f) If you are an owner or operator of an area source subject to this subpart, you are exempt from the obligation to obtain a permit under 40 CFR part 70 or part 71 as a result of this subpart. You may, however, be required to obtain a title V permit due to another reason or reasons. *See* 40 CFR 70.3(a) and (b) or 71.3(a) and (b). Notwithstanding the exemption from title V permitting for area sources under this subpart, you must continue to comply with the provisions of this subpart.

[76 FR 15591, Mar. 21, 2011, as amended at 78 FR 7506, Feb. 1, 2013]

### §63.11195 Are any boilers not subject to this subpart?

The types of boilers listed in paragraphs (a) through (k) of this section are not subject to this subpart and to any requirements in this subpart.

(a) Any boiler specifically listed as, or included in the definition of, an affected source in another standard(s) under this part.

(b) Any boiler specifically listed as an affected source in another standard(s) established under section 129 of the Clean Air Act.

(c) A boiler required to have a permit under section 3005 of the Solid Waste Disposal Act or covered by subpart EEE of this part (*e.g.*, hazardous waste boilers).

(d) A boiler that is used specifically for research and development. This exemption does not include boilers that solely or primarily provide steam (or heat) to a process or for heating at a research and development facility. This exemption does not prohibit the use of the steam (or heat) generated from the boiler during research and development, however, the boiler must be concurrently and primarily engaged in research and development for the exemption to apply.

(e) A gas-fired boiler as defined in this subpart.

(f) A hot water heater as defined in this subpart.

(g) Any boiler that is used as a control device to comply with another subpart of this part, or part 60, part 61, or part 65 of this chapter provided that at least 50 percent of the average annual heat input during any 3 consecutive calendar years to the boiler is provided by regulated gas streams that are subject to another standard.

(h) Temporary boilers as defined in this subpart.

(i) Residential boilers as defined in this subpart.

(j) Electric boilers as defined in this subpart.

(k) An electric utility steam generating unit (EGU) as defined in this subpart.

[76 FR 15591, Mar. 21, 2011, as amended at 78 FR 7506, Feb. 1, 2013; 81 FR 63125, Sept. 14, 2016]

### § 63.11196 What are my compliance dates?

(a) If you own or operate an existing affected boiler, you must achieve compliance with the applicable provisions in this subpart as specified in paragraphs (a)(1) through (3) of this section.

(1) If the existing affected boiler is subject to a work practice or management practice standard of a tune-up, you must achieve compliance with the work practice or management practice standard no later than March 21, 2014.

(2) If the existing affected boiler is subject to emission limits, you must achieve compliance with the emission limits no later than March 21, 2014.

(3) If the existing affected boiler is subject to the energy assessment requirement, you must achieve compliance with the energy assessment requirement no later than March 21, 2014.

(b) If you start up a new affected source on or before May 20, 2011, you must achieve compliance with the provisions of this subpart no later than May 20, 2011.

(c) If you start up a new affected source after May 20, 2011, you must achieve compliance with the provisions of this subpart upon startup of your affected source.

(d) If you own or operate an industrial, commercial, or institutional boiler and would be subject to this subpart except for the exemption in § 63.11195(b) for commercial and industrial solid waste incineration units covered by 40 CFR part 60, subpart CCCC or subpart DDDD, and you cease combusting solid waste, you must be in compliance with this subpart on the effective date of the waste to fuel switch as specified in § 60.2145(a)(2) and (3) of subpart CCCC or § 60.2710(a)(2) and (3) of subpart DDDD.

[76 FR 15591, Mar. 21, 2011, as amended at 78 FR 7506, Feb. 1, 2013]

## EMISSION LIMITS, WORK PRACTICE STANDARDS, EMISSION REDUCTION MEASURES, AND MANAGEMENT PRACTICES

### § 63.11200 What are the subcategories of boilers?

The subcategories of boilers, as defined in § 63.11237 are:

(a) Coal.

(b) Biomass.

(c) Oil.

(d) Seasonal boilers.

(e) Oil-fired boilers with heat input capacity of equal to or less than 5 million British thermal units (Btu) per hour.

(f) Boilers with an oxygen trim system that maintains an optimum air-to-fuel ratio that would otherwise be subject to a biennial tune-up.

(g) Limited-use boilers.

[78 FR 7506, Feb. 1, 2013]

### § 63.11201 What standards must I meet?

(a) You must comply with each emission limit specified in Table 1 to this subpart that applies to your boiler.

(b) You must comply with each work practice standard, emission reduction measure, and management practice specified in Table 2 to this subpart that applies to your boiler. An energy assessment completed on or after January 1, 2008 that meets or is amended to meet the energy assessment requirements in Table 2 to this subpart satisfies the energy assessment requirement. A facility that operates under an energy management program established through energy management systems compatible with ISO 50001, that includes the affected units, also satisfies the energy assessment requirement.

(c) You must comply with each operating limit specified in Table 3 to this subpart that applies to your boiler.

(d) These standards apply at all times the affected boiler is operating, except during periods of startup and shutdown as defined in § 63.11237, during which time you must comply only with Table 2 to this subpart.

[76 FR 15591, Mar. 21, 2011, as amended at 78 FR 7506, Feb. 1, 2013]

GENERAL COMPLIANCE REQUIREMENTS

### § 63.11205 What are my general requirements for complying with this subpart?

(a) At all times you must operate and maintain any affected source, including associated air pollution control equipment and monitoring equipment, in a manner consistent with safety and good air pollution control practices for minimizing emissions. The general duty to minimize emissions does not require you to make any further efforts to reduce emissions if levels required by this standard have been achieved. Determination of whether such operation and maintenance procedures are being used will be based on information available to the Administrator that may include, but is not limited to, monitoring results, review of operation and maintenance procedures, review of operation and maintenance records, and inspection of the source.

(b) You must demonstrate compliance with all applicable emission limits using performance stack testing, fuel analysis, or a continuous monitoring system (CMS), including a continuous emission monitoring system (CEMS), a continuous opacity monitoring system (COMS), or a continuous parameter monitoring system (CPMS), where applicable. You may demonstrate compliance with the applicable mercury emission limit using fuel analysis if the emission rate calculated according to § 63.11211(c) is less than the applicable emission limit. Otherwise, you must demonstrate compliance using stack testing.

(c) If you demonstrate compliance with any applicable emission limit through performance stack testing and subsequent compliance with operating limits (including the use of CPMS), with a CEMS, or with a COMS, you must develop a site-specific monitoring plan according to the requirements in paragraphs (c)(1) through (3) of this section for the use of any CEMS, COMS, or CPMS. This requirement also applies to you if you petition the EPA Administrator for alternative monitoring parameters under § 63.8(f).

(1) For each CMS required in this section (including CEMS, COMS, or CPMS), you must develop, and submit to the Administrator for approval upon request, a site-specific monitoring plan that addresses paragraphs (c)(1)(i) through (vi) of this section. You must submit this site-specific monitoring plan, if requested, at least 60 days before your initial performance evaluation of your CMS. This requirement to develop and submit a site-specific monitoring plan does not apply to affected sources with existing CEMS or COMS operated according to the performance specifications under appendix B to part 60 of this chapter and that meet the requirements of § 63.11224.

(i) Installation of the CMS sampling probe or other interface at a measurement location relative to each affected process unit such that the measurement is representative of control of the exhaust emissions (e.g., on or downstream of the last control device);

(ii) Performance and equipment specifications for the sample interface, the pollutant concentration or parametric

signal analyzer, and the data collection and reduction systems; and

(iii) Performance evaluation procedures and acceptance criteria (*e.g.*, calibrations).

(iv) Ongoing operation and maintenance procedures in accordance with the general requirements of § 63.8(c)(1)(ii), (c)(3), and (c)(4)(ii);

(v) Ongoing data quality assurance procedures in accordance with the general requirements of § 63.8(d); and

(vi) Ongoing recordkeeping and reporting procedures in accordance with the general requirements of § 63.10(c) (as applicable in Table 8 to this subpart), (e)(1), and (e)(2)(i).

(2) You must conduct a performance evaluation of each CMS in accordance with your site-specific monitoring plan.

(3) You must operate and maintain the CMS in continuous operation according to the site-specific monitoring plan.

[76 FR 15591, Mar. 21, 2011, as amended at 78 FR 7506, Feb. 1, 2013]

INITIAL COMPLIANCE REQUIREMENTS

### § 63.11210 What are my initial compliance requirements and by what date must I conduct them?

(a) You must demonstrate initial compliance with each emission limit specified in Table 1 to this subpart that applies to you by either conducting performance (stack) tests, as applicable, according to § 63.11212 and Table 4 to this subpart or, for mercury, conducting fuel analyses, as applicable, according to § 63.11213 and Table 5 to this subpart.

(b) For existing affected boilers that have applicable emission limits, you must demonstrate initial compliance with the applicable emission limits no later than 180 days after the compliance date that is specified in § 63.11196 and according to the applicable provisions in § 63.7(a)(2), except as provided in paragraph (k) of this section.

(c) For existing affected boilers that have applicable work practice standards, management practices, or emission reduction measures, you must demonstrate initial compliance no later than the compliance date that is specified in § 63.11196 and according to the applicable provisions in § 63.7(a)(2), except as provided in paragraph (j) of this section.

(d) For new or reconstructed affected boilers that have applicable emission limits, you must demonstrate initial compliance with the applicable emission limits no later than 180 days after March 21, 2011 or within 180 days after startup of the source, whichever is later, according to § 63.7(a)(2)(ix).

(e) For new or reconstructed oil-fired boilers that commenced construction or reconstruction on or before September 14, 2016, that combust only oil that contains no more than 0.50 weight percent sulfur or a mixture of 0.50 weight percent sulfur oil with other fuels not subject to a particulate matter (PM) emission limit under this subpart and that do not use a post-combustion technology (except a wet scrubber) to reduce PM or sulfur dioxide emissions, you are not subject to the PM emission limit in Table 1 of this subpart until September 14, 2019, providing you monitor and record on a monthly basis the type of fuel combusted. If you intend to burn a new type of fuel or fuel mixture that does not meet the requirements of this paragraph, you must conduct a performance test within 60 days of burning the new fuel. On and after September 14, 2019, you are subject to the PM emission limit in Table 1 of this subpart and you must demonstrate compliance with the PM emission limit in Table 1 no later than March 12, 2020.

(f) For new or reconstructed boilers that combust only ultra-low-sulfur liquid fuel as defined in § 63.11237, you are not subject to the PM emission limit in Table 1 of this subpart providing you monitor and record on a monthly basis the type of fuel combusted. If you intend to burn a fuel other than ultra-low-sulfur liquid fuel or gaseous fuels as defined in § 63.11237, you must conduct a performance test within 60 days of burning the new fuel.

(g) For new or reconstructed affected boilers that have applicable work practice standards or management practices, you are not required to complete an initial performance tune-up, but you are required to complete the applicable biennial or 5-year tune-up as specified in § 63.11223 no later than 25

months or 61 months, respectively, after the initial startup of the new or reconstructed affected source.

(h) For affected boilers that ceased burning solid waste consistent with §63.11196(d) and for which your initial compliance date has passed, you must demonstrate compliance within 60 days of the effective date of the waste-to-fuel switch as specified in §60.2145(a)(2) and (3) of subpart CCCC or §60.2710(a)(2) and (3) of subpart DDDD. If you have not conducted your compliance demonstration for this subpart within the previous 12 months, you must complete all compliance demonstrations for this subpart before you commence or recommence combustion of solid waste.

(i) For affected boilers that switch fuels or make a physical change to the boiler that results in the applicability of a different subcategory within subpart JJJJJJ or the boiler becoming subject to subpart JJJJJJ, you must demonstrate compliance within 180 days of the effective date of the fuel switch or the physical change. Notification of such changes must be submitted according to §63.11225(g).

(j) For boilers located at existing major sources of HAP that limit their potential to emit (*e.g.*, make a physical change or take a permit limit) such that the existing major source becomes an area source, you must comply with the applicable provisions as specified in paragraphs (j)(1) through (3) of this section.

(1) Any such existing boiler at the existing source must demonstrate compliance with subpart JJJJJJ within 180 days of the later of March 21, 2014 or upon the existing major source commencing operation as an area source.

(2) Any new or reconstructed boiler at the existing source must demonstrate compliance with subpart JJJJJJ within 180 days of the later of March 21, 2011 or startup.

(3) Notification of such changes must be submitted according to §63.11225(g).

(k) For existing affected boilers that have not operated on solid fossil fuel, biomass, or liquid fuel between the effective date of the rule and the compliance date that is specified for your source in §63.11196, you must comply with the applicable provisions as specified in paragraphs (k)(1) through (3) of this section.

(1) You must complete the initial compliance demonstration, if subject to the emission limits in Table 1 to this subpart, as specified in paragraphs (a) and (b) of this section, no later than 180 days after the re-start of the affected boiler on solid fossil fuel, biomass, or liquid fuel and according to the applicable provisions in §63.7(a)(2).

(2) You must complete the initial performance tune-up, if subject to the tune-up requirements in §63.11223, by following the procedures described in §63.11223(b) no later than 30 days after the re-start of the affected boiler on solid fossil fuel, biomass, or liquid fuel.

(3) You must complete the one-time energy assessment, if subject to the energy assessment requirements specified in Table 2 to this subpart, no later than the compliance date specified in §63.11196.

[76 FR 15591, Mar. 21, 2011, as amended at 78 FR 7507, Feb. 1, 2013; 81 FR 63125, Sept. 14, 2016]

### §63.11211 How do I demonstrate initial compliance with the emission limits?

(a) For affected boilers that demonstrate compliance with any of the emission limits of this subpart through performance (stack) testing, your initial compliance requirements include conducting performance tests according to §63.11212 and Table 4 to this subpart, conducting a fuel analysis for each type of fuel burned in your boiler according to §63.11213 and Table 5 to this subpart, establishing operating limits according to §63.11222, Table 6 to this subpart and paragraph (b) of this section, as applicable, and conducting CMS performance evaluations according to §63.11224. For affected boilers that burn a single type of fuel, you are exempted from the compliance requirements of conducting a fuel analysis for each type of fuel burned in your boiler. For purposes of this subpart, boilers that use a supplemental fuel only for startup, unit shutdown, and transient flame stability purposes still qualify as affected boilers that burn a single type of fuel, and the supplemental fuel is

not subject to the fuel analysis requirements under § 63.11213 and Table 5 to this subpart.

(b) You must establish parameter operating limits according to paragraphs (b)(1) through (4) of this section.

(1) For a wet scrubber, you must establish the minimum scrubber liquid flow rate and minimum scrubber pressure drop as defined in § 63.11237, as your operating limits during the three-run performance stack test. If you use a wet scrubber and you conduct separate performance stack tests for PM and mercury emissions, you must establish one set of minimum scrubber liquid flow rate and pressure drop operating limits. If you conduct multiple performance stack tests, you must set the minimum scrubber liquid flow rate and pressure drop operating limits at the highest minimum values established during the performance stack tests.

(2) For an electrostatic precipitator operated with a wet scrubber, you must establish the minimum total secondary electric power (secondary voltage and secondary current), as defined in § 63.11237, as your operating limits during the three-run performance stack test.

(3) For activated carbon injection, you must establish the minimum activated carbon injection rate, as defined in § 63.11237, as your operating limit during the three-run performance stack test.

(4) The operating limit for boilers with fabric filters that demonstrate continuous compliance through bag leak detection systems is that a bag leak detection system be installed according to the requirements in § 63.11224, and that each fabric filter must be operated such that the bag leak detection system alarm does not sound more than 5 percent of the operating time during a 6-month period.

(c) If you elect to demonstrate compliance with an applicable mercury emission limit through fuel analysis, you must conduct fuel analyses according to § 63.11213 and Table 5 to this subpart and follow the procedures in paragraphs (c)(1) through (3) of this section.

(1) If you burn more than one fuel type, you must determine the fuel type, or mixture, you could burn in your boiler that would result in the maximum emission rates of mercury.

(2) You must determine the 90th percentile confidence level fuel mercury concentration of the composite samples analyzed for each fuel type using Equation 1 of this section.

$$P_{90} = \text{mean} + (SD * t) \quad \text{(Eq. 1)}$$

Where:

$P_{90}$ = 90th percentile confidence level mercury concentration, in pounds per million Btu.

mean = Arithmetic average of the fuel mercury concentration in the fuel samples analyzed according to § 63.11213, in units of pounds per million Btu.

SD = Standard deviation of the mercury concentration in the fuel samples analyzed according to § 63.11213, in units of pounds per million Btu.

t = t distribution critical value for 90th percentile (0.1) probability for the appropriate degrees of freedom (number of samples minus one) as obtained from a Distribution Critical Value Table.

(3) To demonstrate compliance with the applicable mercury emission limit, the emission rate that you calculate for your boiler using Equation 1 of this section must be less than the applicable mercury emission limit.

[76 FR 15591, Mar. 21, 2011, as amended at 78 FR 7508, Feb. 1, 2013]

### § 63.11212 What stack tests and procedures must I use for the performance tests?

(a) You must conduct all performance tests according to § 63.7(c), (d), (f), and (h). You must also develop a site-specific test plan according to the requirements in § 63.7(c).

(b) You must conduct each stack test according to the requirements in Table 4 to this subpart. Boilers that use a CEMS for carbon monoxide (CO) are exempt from the initial CO performance testing in Table 4 to this subpart and

the oxygen concentration operating limit requirement specified in Table 3 to this subpart.

(c) You must conduct performance stack tests at the representative operating load conditions while burning the type of fuel or mixture of fuels that have the highest emissions potential for each regulated pollutant, and you must demonstrate initial compliance and establish your operating limits based on these performance stack tests. For subcategories with more than one emission limit, these requirements could result in the need to conduct more than one performance stack test. Following each performance stack test and until the next performance stack test, you must comply with the operating limit for operating load conditions specified in Table 3 to this subpart.

(d) You must conduct a minimum of three separate test runs for each performance stack test required in this section, as specified in §63.7(e)(3) and in accordance with the provisions in Table 4 to this subpart.

(e) To determine compliance with the emission limits, you must use the F-Factor methodology and equations in sections 12.2 and 12.3 of EPA Method 19 of appendix A–7 to part 60 of this chapter to convert the measured PM concentrations and the measured mercury concentrations that result from the performance test to pounds per million Btu heat input emission rates.

[76 FR 15591, Mar. 21, 2011, as amended at 78 FR 7508, Feb. 1, 2013]

### §63.11213 What fuel analyses and procedures must I use for the performance tests?

(a) You must conduct fuel analyses according to the procedures in paragraphs (b) and (c) of this section and Table 5 to this subpart, as applicable. You are not required to conduct fuel analyses for fuels used for only startup, unit shutdown, and transient flame stability purposes. You are required to conduct fuel analyses only for fuels and units that are subject to emission limits for mercury in Table 1 of this subpart.

(b) At a minimum, you must obtain three composite fuel samples for each fuel type according to the procedures in Table 5 to this subpart. Each composite sample must consist of a minimum of three samples collected at approximately equal intervals during a test run period.

(c) Determine the concentration of mercury in the fuel in units of pounds per million Btu of each composite sample for each fuel type according to the procedures in Table 5 to this subpart.

### §63.11214 How do I demonstrate initial compliance with the work practice standard, emission reduction measures, and management practice?

(a) If you own or operate an existing or new coal-fired boiler with a heat input capacity of less than 10 million Btu per hour, you must conduct a performance tune-up according to §63.11210(c) or (g), as applicable, and §63.11223(b). If you own or operate an existing coal-fired boiler with a heat input capacity of less than 10 million Btu per hour, you must submit a signed statement in the Notification of Compliance Status report that indicates that you conducted an initial tune-up of the boiler.

(b) If you own or operate an existing or new biomass-fired boiler or an existing or new oil-fired boiler, you must conduct a performance tune-up according to §63.11210(c) or (g), as applicable, and §63.11223(b). If you own or operate an existing biomass-fired boiler or existing oil-fired boiler, you must submit a signed statement in the Notification of Compliance Status report that indicates that you conducted an initial tune-up of the boiler.

(c) If you own or operate an existing affected boiler with a heat input capacity of 10 million Btu per hour or greater, you must submit a signed certification in the Notification of Compliance Status report that an energy assessment of the boiler and its energy use systems was completed according to Table 2 to this subpart and that the assessment is an accurate depiction of your facility at the time of the assessment or that the maximum number of on-site technical hours specified in the definition of energy assessment applicable to the facility has been expended.

(d) If you own or operate a boiler subject to emission limits in Table 1 of this subpart, you must minimize the

boiler's startup and shutdown periods following the manufacturer's recommended procedures, if available. If manufacturer's recommended procedures are not available, you must follow recommended procedures for a unit of similar design for which manufacturer's recommended procedures are available. You must submit a signed statement in the Notification of Compliance Status report that indicates that you conducted startups and shutdowns according to the manufacturer's recommended procedures or procedures specified for a boiler of similar design if manufacturer's recommended procedures are not available.

[76 FR 15591, Mar. 21, 2011, as amended at 78 FR 7508, Feb. 1, 2013; 81 FR 63126, Sept. 14, 2016]

CONTINUOUS COMPLIANCE REQUIREMENTS

### § 63.11220 When must I conduct subsequent performance tests or fuel analyses?

(a) If your boiler has a heat input capacity of 10 million Btu per hour or greater, you must conduct all applicable performance (stack) tests according to § 63.11212 on a triennial basis, except as specified in paragraphs (b) through (e) of this section. Triennial performance tests must be completed no more than 37 months after the previous performance test.

(b) For new or reconstructed boilers that commenced construction or reconstruction on or before September 14, 2016, when demonstrating initial compliance with the PM emission limit, if your boiler's performance test results show that your PM emissions are equal to or less than half of the PM emission limit, you do not need to conduct further performance tests for PM until September 14, 2021, but must continue to comply with all applicable operating limits and monitoring requirements and must comply with the provisions as specified in paragraphs (b)(1) through (4) of this section.

(1) A performance test for PM must be conducted by September 14, 2021.

(2) If your performance test results show that your PM emissions are equal to or less than half of the PM emission limit, you may choose to conduct performance tests for PM every fifth year. Each such performance test must be conducted no more than 61 months after the previous performance test.

(3) If you intend to burn a new type of fuel other than ultra-low-sulfur liquid fuel or gaseous fuels as defined in § 63.11237, you must conduct a performance test within 60 days of burning the new fuel type.

(4) If your performance test results show that your PM emissions are greater than half of the PM emission limit, you must conduct subsequent performance tests on a triennial basis as specified in paragraph (a) of this section.

(c) For new or reconstructed boilers that commenced construction or reconstruction after September 14, 2016, when demonstrating initial compliance with the PM emission limit, if your boiler's performance test results show that your PM emissions are equal to or less than half of the PM emission limit, you may choose to conduct performance tests for PM every fifth year, but must continue to comply with all applicable operating limits and monitoring requirements and must comply with the provisions as specified in paragraphs (c)(1) through (3) of this section.

(1) Each such performance test must be conducted no more than 61 months after the previous performance test.

(2) If you intend to burn a new type of fuel other than ultra-low-sulfur liquid fuel or gaseous fuels as defined in § 63.11237, you must conduct a performance test within 60 days of burning the new fuel type.

(3) If your performance test results show that your PM emissions are greater than half of the PM emission limit, you must conduct subsequent performance tests on a triennial basis as specified in paragraph (a) of this section.

(d) If you demonstrate compliance with the mercury emission limit based on fuel analysis, you must conduct a fuel analysis according to § 63.11213 for each type of fuel burned as specified in paragraphs (d)(1) through (3) of this section. If you plan to burn a new type of fuel or fuel mixture, you must conduct a fuel analysis before burning the new type of fuel or mixture in your

boiler. You must recalculate the mercury emission rate using Equation 1 of §63.11211. The recalculated mercury emission rate must be less than the applicable emission limit.

(1) For existing boilers and new or reconstructed boilers that commenced construction or reconstruction on or before September 14, 2016, when demonstrating initial compliance with the mercury emission limit, if the mercury constituents in the fuel or fuel mixture are measured to be equal to or less than half of the mercury emission limit, you do not need to conduct further fuel analysis sampling until September 14, 2017, but must continue to comply with all applicable operating limits and monitoring requirements and must comply with the provisions as specified in paragraphs (d)(1)(i) and (ii) of this section.

(i) Fuel analysis sampling for mercury must be conducted by September 14, 2017.

(ii) If your fuel analysis results show that the mercury constituents in the fuel or fuel mixture are equal to or less than half of the mercury emission limit, you may choose to conduct fuel analysis sampling for mercury every 12 months.

(2) For new or reconstructed boilers that commenced construction or reconstruction after September 14, 2016, when demonstrating initial compliance with the mercury emission limit, if the mercury constituents in the fuel or fuel mixture are measured to be equal to or less than half of the mercury emission limit, you may choose to conduct fuel analysis sampling for mercury every 12 months, but must continue to comply with all applicable operating limits and monitoring requirements.

(3) When demonstrating compliance with the mercury emission limit, if the mercury constituents in the fuel or fuel mixture are greater than half of the mercury emission limit, you must conduct quarterly sampling.

(e) For existing affected boilers that have not operated on solid fossil fuel, biomass, or liquid fuel since the previous compliance demonstration and more than 3 years have passed since the previous compliance demonstration, you must complete your subsequent compliance demonstration no later than 180 days after the re-start of the affected boiler on solid fossil fuel, biomass, or liquid fuel.

[81 FR 63127, Sept. 14, 2016]

### §63.11221 Is there a minimum amount of monitoring data I must obtain?

(a) You must monitor and collect data according to this section and the site-specific monitoring plan required by §63.11205(c).

(b) You must operate the monitoring system and collect data at all required intervals at all times the affected source is operating and compliance is required, except for periods of monitoring system malfunctions or out-of-control periods (see §63.8(c)(7) of this part), repairs associated with monitoring system malfunctions or out-of-control periods, and required monitoring system quality assurance or quality control activities including, as applicable, calibration checks, required zero and span adjustments, and scheduled CMS maintenance as defined in your site-specific monitoring plan. A monitoring system malfunction is any sudden, infrequent, not reasonably preventable failure of the monitoring system to provide valid data. Monitoring system failures that are caused in part by poor maintenance or careless operation are not malfunctions. You are required to complete monitoring system repairs in response to monitoring system malfunctions or out-of-control periods and to return the monitoring system to operation as expeditiously as practicable.

(c) You may not use data collected during periods of startup and shutdown, monitoring system malfunctions or out-of-control periods, repairs associated with monitoring system malfunctions or out-of-control periods, or required monitoring system quality assurance or quality control activities in calculations used to report emissions or operating levels. Any such periods must be reported according to the requirements in §63.11225. You must use all the data collected during all other periods in assessing the operation of the control device and associated control system.

(d) Except for periods of monitoring system malfunctions or monitoring

system out-of-control periods, repairs associated with monitoring system malfunctions or monitoring system out-of-control periods, and required monitoring system quality assurance or quality control activities (including, as applicable, calibration checks, required zero and span adjustments, and scheduled CMS maintenance as defined in your site-specific monitoring plan), failure to collect required data is a deviation of the monitoring requirements.

[78 FR 7508, Feb. 1, 2013, as amended at 81 FR 63127, Sept. 14, 2016]

### § 63.11222 How do I demonstrate continuous compliance with the emission limits?

(a) You must demonstrate continuous compliance with each emission limit and operating limit in Tables 1 and 3 to this subpart that applies to you according to the methods specified in Table 7 to this subpart and to paragraphs (a)(1) through (4) of this section.

(1) Following the date on which the initial compliance demonstration is completed or is required to be completed under §§ 63.7 and 63.11196, whichever date comes first, you must continuously monitor the operating parameters. Operation above the established maximum, below the established minimum, or outside the allowable range of the operating limits specified in paragraph (a) of this section constitutes a deviation from your operating limits established under this subpart, except during performance tests conducted to determine compliance with the emission and operating limits or to establish new operating limits. Operating limits are confirmed or reestablished during performance tests.

(2) If you have an applicable mercury or PM emission limit, you must keep records of the type and amount of all fuels burned in each boiler during the reporting period. If you have an applicable mercury emission limit, you must demonstrate that all fuel types and mixtures of fuels burned would result in lower emissions of mercury than the applicable emission limit (if you demonstrate compliance through fuel analysis), or result in lower fuel input of mercury than the maximum values calculated during the last performance stack test (if you demonstrate compliance through performance stack testing).

(3) If you have an applicable mercury emission limit and you plan to burn a new type of fuel, you must determine the mercury concentration for any new fuel type in units of pounds per million Btu, using the procedures in Equation 1 of § 63.11211 based on supplier data or your own fuel analysis, and meet the requirements in paragraphs (a)(3)(i) or (ii) of this section.

(i) The recalculated mercury emission rate must be less than the applicable emission limit.

(ii) If the mercury concentration is higher than mercury fuel input during the previous performance test, then you must conduct a new performance test within 60 days of burning the new fuel type or fuel mixture according to the procedures in § 63.11212 to demonstrate that the mercury emissions do not exceed the emission limit.

(4) If your unit is controlled with a fabric filter, and you demonstrate continuous compliance using a bag leak detection system, you must initiate corrective action within 1 hour of a bag leak detection system alarm and operate and maintain the fabric filter system such that the alarm does not sound more than 5 percent of the operating time during a 6-month period. You must also keep records of the date, time, and duration of each alarm, the time corrective action was initiated and completed, and a brief description of the cause of the alarm and the corrective action taken. You must also record the percent of the operating time during each 6-month period that the alarm sounds. In calculating this operating time percentage, if inspection of the fabric filter demonstrates that no corrective action is required, no alarm time is counted. If corrective action is required, each alarm is counted as a minimum of 1 hour. If you take longer than 1 hour to initiate corrective action, the alarm time is counted as the actual amount of time taken to initiate corrective action.

(b) You must report each instance in which you did not meet each emission limit and operating limit in Tables 1 and 3 to this subpart that apply to you. These instances are deviations from

the emission limits in this subpart. These deviations must be reported according to the requirements in § 63.11225.

[76 FR 15591, Mar. 21, 2011, as amended at 81 FR 63127, Sept. 14, 2016]

### § 63.11223 How do I demonstrate continuous compliance with the work practice and management practice standards?

(a) For affected sources subject to the work practice standard or the management practices of a tune-up, you must conduct a performance tune-up according to paragraph (b) of this section and keep records as required in § 63.11225(c) to demonstrate continuous compliance. You must conduct the tune-up while burning the type of fuel (or fuels in the case of boilers that routinely burn two types of fuels at the same time) that provided the majority of the heat input to the boiler over the 12 months prior to the tune-up.

(b) Except as specified in paragraphs (c) through (f) of this section, you must conduct a tune-up of the boiler biennially to demonstrate continuous compliance as specified in paragraphs (b)(1) through (7) of this section. Each biennial tune-up must be conducted no more than 25 months after the previous tune-up. For a new or reconstructed boiler, the first biennial tune-up must be no later than 25 months after the initial startup of the new or reconstructed boiler.

(1) As applicable, inspect the burner, and clean or replace any components of the burner as necessary (you may delay the burner inspection until the next scheduled unit shutdown, not to exceed 36 months from the previous inspection). Units that produce electricity for sale may delay the burner inspection until the first outage, not to exceed 36 months from the previous inspection.

(2) Inspect the flame pattern, as applicable, and adjust the burner as necessary to optimize the flame pattern. The adjustment should be consistent with the manufacturer's specifications, if available.

(3) Inspect the system controlling the air-to-fuel ratio, as applicable, and ensure that it is correctly calibrated and functioning properly (you may delay the inspection until the next scheduled unit shutdown, not to exceed 36 months from the previous inspection). Units that produce electricity for sale may delay the inspection until the first outage, not to exceed 36 months from the previous inspection.

(4) Optimize total emissions of CO. This optimization should be consistent with the manufacturer's specifications, if available, and with any nitrogen oxide requirement to which the unit is subject.

(5) Measure the concentrations in the effluent stream of CO in parts per million, by volume, and oxygen in volume percent, before and after the adjustments are made (measurements may be either on a dry or wet basis, as long as it is the same basis before and after the adjustments are made). Measurements may be taken using a portable CO analyzer.

(6) Maintain on-site and submit, if requested by the Administrator, a report containing the information in paragraphs (b)(6)(i) through (iii) of this section.

(i) The concentrations of CO in the effluent stream in parts per million, by volume, and oxygen in volume percent, measured at high fire or typical operating load, before and after the tune-up of the boiler.

(ii) A description of any corrective actions taken as a part of the tune-up of the boiler.

(iii) The type and amount of fuel used over the 12 months prior to the tune-up of the boiler, but only if the unit was physically and legally capable of using more than one type of fuel during that period. Units sharing a fuel meter may estimate the fuel use by each unit.

(7) If the unit is not operating on the required date for a tune-up, the tune-up must be conducted within 30 days of startup.

(c) Boilers with an oxygen trim system that maintains an optimum air-to-fuel ratio that would otherwise be subject to a biennial tune-up must conduct a tune-up of the boiler every 5 years as specified in paragraphs (b)(1) through (7) of this section. Each 5-year tune-up must be conducted no more than 61 months after the previous tune-up. For a new or reconstructed boiler with an oxygen trim system, the first 5-year tune-up must be no later than 61

months after the initial startup. You may delay the burner inspection specified in paragraph (b)(1) of this section and inspection of the system controlling the air-to-fuel ratio specified in paragraph (b)(3) of this section until the next scheduled unit shutdown, but you must inspect each burner and system controlling the air-to-fuel ratio at least once every 72 months. If an oxygen trim system is utilized on a unit without emission standards to reduce the tune-up frequency to once every 5 years, set the oxygen level no lower than the oxygen concentration measured during the most recent tune-up.

(d) Seasonal boilers must conduct a tune-up every 5 years as specified in paragraphs (b)(1) through (7) of this section. Each 5-year tune-up must be conducted no more than 61 months after the previous tune-up. For a new or reconstructed seasonal boiler, the first 5-year tune-up must be no later than 61 months after the initial startup. You may delay the burner inspection specified in paragraph (b)(1) of this section and inspection of the system controlling the air-to-fuel ratio specified in paragraph (b)(3) of this section until the next scheduled unit shutdown, but you must inspect each burner and system controlling the air-to-fuel ratio at least once every 72 months. Seasonal boilers are not subject to the emission limits in Table 1 to this subpart or the operating limits in Table 3 to this subpart.

(e) Oil-fired boilers with a heat input capacity of equal to or less than 5 million Btu per hour must conduct a tune-up every 5 years as specified in paragraphs (b)(1) through (7) of this section. Each 5-year tune-up must be conducted no more than 61 months after the previous tune-up. For a new or reconstructed oil-fired boiler with a heat input capacity of equal to or less than 5 million Btu per hour, the first 5-year tune-up must be no later than 61 months after the initial startup. You may delay the burner inspection specified in paragraph (b)(1) of this section and inspection of the system controlling the air-to-fuel ratio specified in paragraph (b)(3) of this section until the next scheduled unit shutdown, but you must inspect each burner and system controlling the air-to-fuel ratio at least once every 72 months.

(f) Limited-use boilers must conduct a tune-up every 5 years as specified in paragraphs (b)(1) through (7) of this section. Each 5-year tune-up must be conducted no more than 61 months after the previous tune-up. For a new or reconstructed limited-use boiler, the first 5-year tune-up must be no later than 61 months after the initial startup. You may delay the burner inspection specified in paragraph (b)(1) of this section and inspection of the system controlling the air-to-fuel ratio specified in paragraph (b)(3) of this section until the next scheduled unit shutdown, but you must inspect each burner and system controlling the air-to-fuel ratio at least once every 72 months. Limited-use boilers are not subject to the emission limits in Table 1 to this subpart, the energy assessment requirements in Table 2 to this subpart, or the operating limits in Table 3 to this subpart.

(g) If you own or operate a boiler subject to emission limits in Table 1 of this subpart, you must minimize the boiler's startup and shutdown periods following the manufacturer's recommended procedures, if available. If manufacturer's recommended procedures are not available, you must follow recommended procedures for a unit of similar design for which manufacturer's recommended procedures are available. You must submit a signed statement in the Notification of Compliance Status report that indicates that you conducted startups and shutdowns according to the manufacturer's recommended procedures or procedures specified for a boiler of similar design if manufacturer's recommended procedures are not available.

[76 FR 15591, Mar. 21, 2011, as amended at 78 FR 7509, Feb. 1, 2013; 81 FR 63127, Sept. 14, 2016]

### § 63.11224 What are my monitoring, installation, operation, and maintenance requirements?

(a) If your boiler is subject to a CO emission limit in Table 1 to this subpart, you must either install, operate, and maintain a CEMS for CO and oxygen according to the procedures in paragraphs (a)(1) through (6) of this

section, or install, calibrate, operate, and maintain an oxygen analyzer system, as defined in §63.11237, according to the manufacturer's recommendations and paragraphs (a)(7) and (d) of this section, as applicable, by the compliance date specified in §63.11196. Where a certified CO CEMS is used, the CO level shall be monitored at the outlet of the boiler, after any add-on controls or flue gas recirculation system and before release to the atmosphere. Boilers that use a CO CEMS are exempt from the initial CO performance testing and oxygen concentration operating limit requirements specified in §63.11211(a) of this subpart. Oxygen monitors and oxygen trim systems must be installed to monitor oxygen in the boiler flue gas, boiler firebox, or other appropriate intermediate location.

(1) Each CO CEMS must be installed, operated, and maintained according to the applicable procedures under Performance Specification 4, 4A, or 4B at 40 CFR part 60, appendix B, and each oxygen CEMS must be installed, operated, and maintained according to Performance Specification 3 at 40 CFR part 60, appendix B. Both the CO and oxygen CEMS must also be installed, operated, and maintained according to the site-specific monitoring plan developed according to paragraph (c) of this section.

(2) You must conduct a performance evaluation of each CEMS according to the requirements in §63.8(e) and according to Performance Specifications 3 and 4, 4A, or 4B at 40 CFR part 60, appendix B.

(3) Each CEMS must complete a minimum of one cycle of operation (sampling, analyzing, and data recording) every 15 minutes. You must have CEMS data values from a minimum of four successive cycles of operation representing each of the four 15-minute periods in an hour, or at least two 15-minute data values during an hour when CEMS calibration, quality assurance, or maintenance activities are being performed, to have a valid hour of data.

(4) The CEMS data must be reduced as specified in §63.8(g)(2).

(5) You must calculate hourly averages, corrected to 3 percent oxygen, from each hour of CO CEMS data in parts per million CO concentrations and determine the 10-day rolling average of all recorded readings, except as provided in §63.11221(c). Calculate a 10-day rolling average from all of the hourly averages collected for the 10-day operating period using Equation 2 of this section.

$$\text{10-day average} = \frac{\Sigma_{i=1}^{n} Hpvi}{n} \qquad \text{(Eq. 2)}$$

Where:

Hpvi = the hourly parameter value for hour i

n = the number of valid hourly parameter values collected over 10 boiler operating days

(6) For purposes of collecting CO data, you must operate the CO CEMS as specified in §63.11221(b). For purposes of calculating data averages, you must use all the data collected during all periods in assessing compliance, except that you must exclude certain data as specified in §63.11221(c). Periods when CO data are unavailable may constitute monitoring deviations as specified in §63.11221(d).

(7) You must operate the oxygen analyzer system at or above the minimum oxygen level that is established as the operating limit according to Table 6 to this subpart when firing the fuel or fuel mixture utilized during the most recent CO performance stack test. Operation of oxygen trim systems to meet these requirements shall not be done in a manner which compromises furnace safety.

(b) If you are using a control device to comply with the emission limits specified in Table 1 to this subpart, you must maintain each operating limit in Table 3 to this subpart that applies to your boiler as specified in Table 7 to

this subpart. If you use a control device not covered in Table 3 to this subpart, or you wish to establish and monitor an alternative operating limit and alternative monitoring parameters, you must apply to the United States Environmental Protection Agency (EPA) Administrator for approval of alternative monitoring under § 63.8(f).

(c) If you demonstrate compliance with any applicable emission limit through stack testing and subsequent compliance with operating limits, you must develop a site-specific monitoring plan according to the requirements in paragraphs (c)(1) through (4) of this section. This requirement also applies to you if you petition the EPA Administrator for alternative monitoring parameters under § 63.8(f).

(1) For each CMS required in this section, you must develop, and submit to the EPA Administrator for approval upon request, a site-specific monitoring plan that addresses paragraphs (c)(1)(i) through (iii) of this section. You must submit this site-specific monitoring plan (if requested) at least 60 days before your initial performance evaluation of your CMS.

(i) Installation of the CMS sampling probe or other interface at a measurement location relative to each affected unit such that the measurement is representative of control of the exhaust emissions (*e.g.*, on or downstream of the last control device).

(ii) Performance and equipment specifications for the sample interface, the pollutant concentration or parametric signal analyzer, and the data collection and reduction systems.

(iii) Performance evaluation procedures and acceptance criteria (*e.g.*, calibrations).

(2) In your site-specific monitoring plan, you must also address paragraphs (c)(2)(i) through (iii) of this section.

(i) Ongoing operation and maintenance procedures in accordance with the general requirements of § 63.8(c)(1), (3), and (4)(ii).

(ii) Ongoing data quality assurance procedures in accordance with the general requirements of § 63.8(d).

(iii) Ongoing recordkeeping and reporting procedures in accordance with the general requirements of § 63.10(c), (e)(1), and (e)(2)(i).

(3) You must conduct a performance evaluation of each CMS in accordance with your site-specific monitoring plan.

(4) You must operate and maintain the CMS in continuous operation according to the site-specific monitoring plan.

(d) If you have an operating limit that requires the use of a CMS, you must install, operate, and maintain each CPMS according to the procedures in paragraphs (d)(1) through (4) of this section.

(1) The CPMS must complete a minimum of one cycle of operation every 15 minutes. You must have data values from a minimum of four successive cycles of operation representing each of the four 15-minute periods in an hour, or at least two 15-minute data values during an hour when CMS calibration, quality assurance, or maintenance activities are being performed, to have a valid hour of data.

(2) You must calculate hourly arithmetic averages from each hour of CPMS data in units of the operating limit and determine the 30-day rolling average of all recorded readings, except as provided in § 63.11221(c). Calculate a 30-day rolling average from all of the hourly averages collected for the 30-day operating period using Equation 3 of this section.

$$\text{30-day average} = \frac{\Sigma_{i=1}^{n} Hpvi}{n} \qquad \text{(Eq. 3)}$$

Where:

Hpvi = the hourly parameter value for hour i

n = the number of valid hourly parameter values collected over 30 boiler operating days

(3) For purposes of collecting data, you must operate the CPMS as specified in §63.11221(b). For purposes of calculating data averages, you must use all the data collected during all periods in assessing compliance, except that you must exclude certain data as specified in §63.11221(c). Periods when CPMS data are unavailable may constitute monitoring deviations as specified in §63.11221(d).

(4) Record the results of each inspection, calibration, and validation check.

(e) If you have an applicable opacity operating limit under this rule, you must install, operate, certify and maintain each COMS according to the procedures in paragraphs (e)(1) through (8) of this section by the compliance date specified in §63.11196.

(1) Each COMS must be installed, operated, and maintained according to Performance Specification 1 of 40 CFR part 60, appendix B.

(2) You must conduct a performance evaluation of each COMS according to the requirements in §63.8 and according to Performance Specification 1 of 40 CFR part 60, appendix B.

(3) As specified in §63.8(c)(4)(i), each COMS must complete a minimum of one cycle of sampling and analyzing for each successive 10-second period and one cycle of data recording for each successive 6-minute period.

(4) The COMS data must be reduced as specified in §63.8(g)(2).

(5) You must include in your site-specific monitoring plan procedures and acceptance criteria for operating and maintaining each COMS according to the requirements in §63.8(d). At a minimum, the monitoring plan must include a daily calibration drift assessment, a quarterly performance audit, and an annual zero alignment audit of each COMS.

(6) You must operate and maintain each COMS according to the requirements in the monitoring plan and the requirements of §63.8(e). You must identify periods the COMS is out of control including any periods that the COMS fails to pass a daily calibration drift assessment, a quarterly performance audit, or an annual zero alignment audit.

(7) You must calculate and record 6-minute averages from the opacity monitoring data and determine and record the daily block average of recorded readings, except as provided in §63.11221(c).

(8) For purposes of collecting opacity data, you must operate the COMS as specified in §63.11221(b). For purposes of calculating data averages, you must use all the data collected during all periods in assessing compliance, except that you must exclude certain data as specified in §63.11221(c). Periods when COMS data are unavailable may constitute monitoring deviations as specified in §63.11221(d).

(f) If you use a fabric filter bag leak detection system to comply with the requirements of this subpart, you must install, calibrate, maintain, and continuously operate the bag leak detection system as specified in paragraphs (f)(1) through (8) of this section.

(1) You must install and operate a bag leak detection system for each exhaust stack of the fabric filter.

(2) Each bag leak detection system must be installed, operated, calibrated, and maintained in a manner consistent with the manufacturer's written specifications and recommendations and in accordance with EPA–454/R–98–015 (incorporated by reference, see §63.14).

(3) The bag leak detection system must be certified by the manufacturer to be capable of detecting particulate matter emissions at concentrations of 10 milligrams per actual cubic meter or less.

(4) The bag leak detection system sensor must provide output of relative or absolute particulate matter loadings.

(5) The bag leak detection system must be equipped with a device to continuously record the output signal from the sensor.

(6) The bag leak detection system must be equipped with an audible or visual alarm system that will activate automatically when an increase in relative particulate matter emissions over a preset level is detected. The alarm must be located where it is easily heard or seen by plant operating personnel.

(7) For positive pressure fabric filter systems that do not duct all compartments or cells to a common stack, a

bag leak detection system must be installed in each baghouse compartment or cell.

(8) Where multiple bag leak detectors are required, the system's instrumentation and alarm may be shared among detectors.

[76 FR 15591, Mar. 21, 2011, as amended at 78 FR 7510, Feb. 1, 2013]

### § 63.11225 What are my notification, reporting, and recordkeeping requirements?

(a) You must submit the notifications specified in paragraphs (a)(1) through (5) of this section to the administrator.

(1) You must submit all of the notifications in §§ 63.7(b); 63.8(e) and (f); and 63.9(b) through (e), (g), and (h) that apply to you by the dates specified in those sections except as specified in paragraphs (a)(2) and (4) of this section.

(2) An Initial Notification must be submitted no later than January 20, 2014 or within 120 days after the source becomes subject to the standard.

(3) If you are required to conduct a performance stack test you must submit a Notification of Intent to conduct a performance test at least 60 days before the performance stack test is scheduled to begin.

(4) You must submit the Notification of Compliance Status no later than 120 days after the applicable compliance date specified in § 63.11196 unless you own or operate a new boiler subject only to a requirement to conduct a biennial or 5-year tune-up or you must conduct a performance stack test. If you own or operate a new boiler subject to a requirement to conduct a tune-up, you are not required to prepare and submit a Notification of Compliance Status for the tune-up. If you must conduct a performance stack test, you must submit the Notification of Compliance Status within 60 days of completing the performance stack test. You must submit the Notification of Compliance Status in accordance with paragraphs (a)(4)(i) and (vi) of this section. The Notification of Compliance Status must include the information and certification(s) of compliance in paragraphs (a)(4)(i) through (v) of this section, as applicable, and signed by a responsible official.

(i) You must submit the information required in § 63.9(h)(2), except the information listed in § 63.9(h)(2)(i)(B), (D), (E), and (F). If you conduct any performance tests or CMS performance evaluations, you must submit that data as specified in paragraph (e) of this section. If you conduct any opacity or visible emission observations, or other monitoring procedures or methods, you must submit that data to the Administrator at the appropriate address listed in § 63.13.

(ii) ''This facility complies with the requirements in § 63.11214 to conduct an initial tune-up of the boiler.''

(iii) ''This facility has had an energy assessment performed according to § 63.11214(c).''

(iv) For units that install bag leak detection systems: ''This facility complies with the requirements in § 63.11224(f).''

(v) For units that do not qualify for a statutory exemption as provided in section 129(g)(1) of the Clean Air Act: ''No secondary materials that are solid waste were combusted in any affected unit.''

(vi) The notification must be submitted electronically using the Compliance and Emissions Data Reporting Interface (CEDRI) that is accessed through EPA's Central Data Exchange (CDX) (*www.epa.gov/cdx*). However, if the reporting form specific to this subpart is not available in CEDRI at the time that the report is due, the written Notification of Compliance Status must be submitted to the Administrator at the appropriate address listed in § 63.13.

(5) If you are using data from a previously conducted emission test to serve as documentation of conformance with the emission standards and operating limits of this subpart, you must include in the Notification of Compliance Status the date of the test and a summary of the results, not a complete test report, relative to this subpart.

(b) You must prepare, by March 1 of each year, and submit to the delegated authority upon request, an annual compliance certification report for the previous calendar year containing the information specified in paragraphs (b)(1) through (4) of this section. You must submit the report by March 15 if

you had any instance described by paragraph (b)(3) of this section. For boilers that are subject only to the energy assessment requirement and/or a requirement to conduct a biennial or 5-year tune-up according to §63.11223(a) and not subject to emission limits or operating limits, you may prepare only a biennial or 5-year compliance report as specified in paragraphs (b)(1) and (2) of this section.

(1) Company name and address.

(2) Statement by a responsible official, with the official's name, title, phone number, email address, and signature, certifying the truth, accuracy and completeness of the notification and a statement of whether the source has complied with all the relevant standards and other requirements of this subpart. Your notification must include the following certification(s) of compliance, as applicable, and signed by a responsible official:

(i) ''This facility complies with the requirements in §63.11223 to conduct a biennial or 5-year tune-up, as applicable, of each boiler.''

(ii) For units that do not qualify for a statutory exemption as provided in section 129(g)(1) of the Clean Air Act: ''No secondary materials that are solid waste were combusted in any affected unit.''

(iii) ''This facility complies with the requirement in §§63.11214(d) and 63.11223(g) to minimize the boiler's time spent during startup and shutdown and to conduct startups and shutdowns according to the manufacturer's recommended procedures or procedures specified for a boiler of similar design if manufacturer's recommended procedures are not available.''

(3) If the source experiences any deviations from the applicable requirements during the reporting period, include a description of deviations, the time periods during which the deviations occurred, and the corrective actions taken.

(4) The total fuel use by each affected boiler subject to an emission limit, for each calendar month within the reporting period, including, but not limited to, a description of the fuel, whether the fuel has received a non-waste determination by you or EPA through a petition process to be a non-waste under §241.3(c), whether the fuel(s) were processed from discarded non-hazardous secondary materials within the meaning of §241.3, and the total fuel usage amount with units of measure.

(c) You must maintain the records specified in paragraphs (c)(1) through (7) of this section.

(1) As required in §63.10(b)(2)(xiv), you must keep a copy of each notification and report that you submitted to comply with this subpart and all documentation supporting any Initial Notification or Notification of Compliance Status that you submitted.

(2) You must keep records to document conformance with the work practices, emission reduction measures, and management practices required by §63.11214 and §63.11223 as specified in paragraphs (c)(2)(i) through (vi) of this section.

(i) Records must identify each boiler, the date of tune-up, the procedures followed for tune-up, and the manufacturer's specifications to which the boiler was tuned.

(ii) For operating units that combust non-hazardous secondary materials that have been determined not to be solid waste pursuant to §241.3(b)(1) of this chapter, you must keep a record which documents how the secondary material meets each of the legitimacy criteria under §241.3(d)(1). If you combust a fuel that has been processed from a discarded non-hazardous secondary material pursuant to §241.3(b)(4) of this chapter, you must keep records as to how the operations that produced the fuel satisfies the definition of processing in §241.2 and each of the legitimacy criteria in §241.3(d)(1) of this chapter. If the fuel received a non-waste determination pursuant to the petition process submitted under §241.3(c) of this chapter, you must keep a record that documents how the fuel satisfies the requirements of the petition process. For operating units that combust non-hazardous secondary materials as fuel per §241.4, you must keep records documenting that the material is a listed non-waste under §241.4(a).

(iii) For each boiler required to conduct an energy assessment, you must keep a copy of the energy assessment report.

(iv) For each boiler subject to an emission limit in Table 1 to this subpart, you must keep records of monthly fuel use by each boiler, including the type(s) of fuel and amount(s) used. For each new oil-fired boiler that meets the requirements of § 63.11210(e) or (f), you must keep records, on a monthly basis, of the type of fuel combusted.

(v) For each boiler that meets the definition of seasonal boiler, you must keep records of days of operation per year.

(vi) For each boiler that meets the definition of limited-use boiler, you must keep a copy of the federally enforceable permit that limits the annual capacity factor to less than or equal to 10 percent and records of fuel use for the days the boiler is operating.

(3) For sources that demonstrate compliance through fuel analysis, a copy of all calculations and supporting documentation that were done to demonstrate compliance with the mercury emission limits. Supporting documentation should include results of any fuel analyses. You can use the results from one fuel analysis for multiple boilers provided they are all burning the same fuel type.

(4) Records of the occurrence and duration of each malfunction of the boiler, or of the associated air pollution control and monitoring equipment.

(5) Records of actions taken during periods of malfunction to minimize emissions in accordance with the general duty to minimize emissions in § 63.11205(a), including corrective actions to restore the malfunctioning boiler, air pollution control, or monitoring equipment to its normal or usual manner of operation.

(6) You must keep the records of all inspection and monitoring data required by §§ 63.11221 and 63.11222, and the information identified in paragraphs (c)(6)(i) through (vi) of this section for each required inspection or monitoring.

(i) The date, place, and time of the monitoring event.

(ii) Person conducting the monitoring.

(iii) Technique or method used.

(iv) Operating conditions during the activity.

(v) Results, including the date, time, and duration of the period from the time the monitoring indicated a problem to the time that monitoring indicated proper operation.

(vi) Maintenance or corrective action taken (if applicable).

(7) If you use a bag leak detection system, you must keep the records specified in paragraphs (c)(7)(i) through (iii) of this section.

(i) Records of the bag leak detection system output.

(ii) Records of bag leak detection system adjustments, including the date and time of the adjustment, the initial bag leak detection system settings, and the final bag leak detection system settings.

(iii) The date and time of all bag leak detection system alarms, and for each valid alarm, the time you initiated corrective action, the corrective action taken, and the date on which corrective action was completed.

(d) Your records must be in a form suitable and readily available for expeditious review. You must keep each record for 5 years following the date of each recorded action. You must keep each record on-site or be accessible from a central location by computer or other means that instantly provide access at the site for at least 2 years after the date of each recorded action. You may keep the records off site for the remaining 3 years.

(e)(1) Within 60 days after the date of completing each performance test (as defined in § 63.2) required by this subpart, you must submit the results of the performance tests, including any associated fuel analyses, following the procedure specified in either paragraph (e)(1)(i) or (ii) of this section.

(i) For data collected using test methods supported by the EPA's Electronic Reporting Tool (ERT) as listed on the EPA's ERT Web site (*https://www3.epa.gov/ttn/chief/ert/ert_info.html*) at the time of the test, you must submit the results of the performance test to the EPA via the Compliance and Emissions Data Reporting Interface (CEDRI). (CEDRI can be accessed through the EPA's Central Data Exchange (CDX) (*https://cdx.epa.gov/*).) Performance test data must be submitted in a file format generated

through the use of the EPA's ERT or an alternate electronic file format consistent with the extensible markup language (XML) schema listed on the EPA's ERT Web site. If you claim that some of the performance test information being submitted is confidential business information (CBI), you must submit a complete file generated through the use of the EPA's ERT or an alternate electronic file consistent with the XML schema listed on the EPA's ERT Web site, including information claimed to be CBI, on a compact disc, flash drive, or other commonly used electronic storage media to the EPA. The electronic media must be clearly marked as CBI and mailed to U.S. EPA/OAQPS/CORE CBI Office, Attention: Group Leader, Measurement Policy Group, MD C404–02, 4930 Old Page Rd., Durham, NC 27703. The same ERT or alternate file with the CBI omitted must be submitted to the EPA via the EPA's CDX as described earlier in this paragraph.

(ii) For data collected using test methods that are not supported by the EPA's ERT as listed on the EPA's ERT Web site at the time of the test, you must submit the results of the performance test to the Administrator at the appropriate address listed in §63.13.

(2) Within 60 days after the date of completing each CEMS performance evaluation (as defined in §63.2), you must submit the results of the performance evaluation following the procedure specified in either paragraph (e)(2)(i) or (ii) of this section.

(i) For performance evaluations of continuous monitoring systems measuring relative accuracy test audit (RATA) pollutants that are supported by the EPA's ERT as listed on the EPA's ERT Web site at the time of the evaluation, you must submit the results of the performance evaluation to the EPA via the CEDRI. (CEDRI can be accessed through the EPA's CDX.) Performance evaluation data must be submitted in a file format generated through the use of the EPA's ERT or an alternate file format consistent with the XML schema listed on the EPA's ERT Web site. If you claim that some of the performance evaluation information being submitted is CBI, you must submit a complete file generated through the use of the EPA's ERT or an alternate electronic file consistent with the XML schema listed on the EPA's ERT Web site, including information claimed to be CBI, on a compact disc, flash drive, or other commonly used electronic storage media to the EPA. The electronic storage media must be clearly marked as CBI and mailed to U.S. EPA/OAQPS/CORE CBI Office, Attention: Group Leader, Measurement Policy Group, MD C404–02, 4930 Old Page Rd., Durham, NC 27703. The same ERT or alternate file with the CBI omitted must be submitted to the EPA via the EPA's CDX as described earlier in this paragraph.

(ii) For any performance evaluations of continuous monitoring systems measuring RATA pollutants that are not supported by the EPA's ERT as listed on the EPA's ERT Web site at the time of the evaluation, you must submit the results of the performance evaluation to the Administrator at the appropriate address listed in §63.13.

(f) If you intend to commence or recommence combustion of solid waste, you must provide 30 days prior notice of the date upon which you will commence or recommence combustion of solid waste. The notification must identify:

(1) The name of the owner or operator of the affected source, the location of the source, the boiler(s) that will commence burning solid waste, and the date of the notice.

(2) The currently applicable subcategory under this subpart.

(3) The date on which you became subject to the currently applicable emission limits.

(4) The date upon which you will commence combusting solid waste.

(g) If you have switched fuels or made a physical change to the boiler and the fuel switch or change resulted in the applicability of a different subcategory within this subpart, in the boiler becoming subject to this subpart, or in the boiler switching out of this subpart due to a fuel change that results in the boiler meeting the definition of gas-fired boiler, as defined in §63.11237, or you have taken a permit limit that resulted in you becoming subject to this subpart or no longer being subject to this subpart, you must

provide notice of the date upon which you switched fuels, made the physical change, or took a permit limit within 30 days of the change. The notification must identify:

(1) The name of the owner or operator of the affected source, the location of the source, the boiler(s) that have switched fuels, were physically changed, or took a permit limit, and the date of the notice.

(2) The date upon which the fuel switch, physical change, or permit limit occurred.

[76 FR 15591, Mar. 21, 2011, as amended at 78 FR 7511, Feb. 1, 2013; 81 FR 63127, Sept. 14, 2016]

### § 63.11226 [Reserved]

OTHER REQUIREMENTS AND INFORMATION

### § 63.11235 What parts of the General Provisions apply to me?

Table 8 to this subpart shows which parts of the General Provisions in §§ 63.1 through 63.15 apply to you.

### § 63.11236 Who implements and enforces this subpart?

(a) This subpart can be implemented and enforced by EPA or an administrator such as your state, local, or tribal agency. If the EPA Administrator has delegated authority to your state, local, or tribal agency, then that agency has the authority to implement and enforce this subpart. You should contact your EPA Regional Office to find out if implementation and enforcement of this subpart is delegated to your state, local, or tribal agency.

(b) In delegating implementation and enforcement authority of this subpart to a state, local, or tribal agency under 40 CFR part 63, subpart E, the authorities contained in paragraphs (c) of this section are retained by the EPA Administrator and are not transferred to the state, local, or tribal agency.

(c) The authorities that cannot be delegated to state, local, or tribal agencies are specified in paragraphs (c)(1) through (5) of this section.

(1) Approval of an alternative non-opacity emission standard and work practice standards in § 63.11223(a).

(2) Approval of alternative opacity emission standard under § 63.6(h)(9).

(3) Approval of major change to test methods under § 63.7(e)(2)(ii) and (f). A ''major change to test method'' is defined in § 63.90.

(4) Approval of a major change to monitoring under § 63.8(f). A ''major change to monitoring'' is defined in § 63.90.

(5) Approval of major change to recordkeeping and reporting under § 63.10(f). A ''major change to recordkeeping/reporting'' is defined in § 63.90.

[76 FR 15591, Mar. 21, 2011, as amended at 78 FR 7513, Feb. 1, 2013]

### § 63.11237 What definitions apply to this subpart?

Terms used in this subpart are defined in the Clean Air Act, in § 63.2 (the General Provisions), and in this section as follows:

*10-day rolling average* means the arithmetic mean of all valid hours of data from 10 successive operating days, except for periods of startup and shutdown and periods when the unit is not operating.

*30-day rolling average* means the arithmetic mean of all valid hours of data from 30 successive operating days, except for periods of startup and shutdown and periods when the unit is not operating.

*Annual capacity factor* means the ratio between the actual heat input to a boiler from the fuels burned during a calendar year and the potential heat input to the boiler had it been operated for 8,760 hours during a year at the maximum steady state design heat input capacity.

*Annual heat input* means the heat input for the 12 months preceding the compliance demonstration.

*Bag leak detection system* means a group of instruments that are capable of monitoring particulate matter loadings in the exhaust of a fabric filter (*i.e.*, baghouse) in order to detect bag failures. A bag leak detection system includes, but is not limited to, an instrument that operates on electrodynamic, triboelectric, light scattering, light transmittance, or other principle to monitor relative particulate matter loadings.

*Biodiesel* means a mono-alkyl ester derived from biomass and conforming

to ASTM D6751–11b, Standard Specification for Biodiesel Fuel Blend Stock (B100) for Middle Distillate Fuels (incorporated by reference, see §63.14).

*Biomass* means any biomass-based solid fuel that is not a solid waste. This includes, but is not limited to, wood residue and wood products (e.g., trees, tree stumps, tree limbs, bark, lumber, sawdust, sander dust, chips, scraps, slabs, millings, and shavings); animal manure, including litter and other bedding materials; vegetative agricultural and silvicultural materials, such as logging residues (slash), nut and grain hulls and chaff (*e.g.*, almond, walnut, peanut, rice, and wheat), bagasse, orchard prunings, corn stalks, coffee bean hulls and grounds. This definition of biomass is not intended to suggest that these materials are or are not solid waste.

*Biomass subcategory* includes any boiler that burns any biomass and is not in the coal subcategory.

*Boiler* means an enclosed device using controlled flame combustion in which water is heated to recover thermal energy in the form of steam and/or hot water. Controlled flame combustion refers to a steady-state, or near steady-state, process wherein fuel and/or oxidizer feed rates are controlled. A device combusting solid waste, as defined in §241.3 of this chapter, is not a boiler unless the device is exempt from the definition of a solid waste incineration unit as provided in section 129(g)(1) of the Clean Air Act. Waste heat boilers, process heaters, and autoclaves are excluded from the definition of *Boiler*.

*Boiler system* means the boiler and associated components, such as, feedwater systems, combustion air systems, fuel systems (including burners), blowdown systems, combustion control systems, steam systems, and condensate return systems, directly connected to and serving the energy use systems.

*Calendar year* means the period between January 1 and December 31, inclusive, for a given year.

*Coal* means all solid fuels classifiable as anthracite, bituminous, sub-bituminous, or lignite by the American Society for Testing and Materials in ASTM D388 (incorporated by reference, see §63.14), coal refuse, and petroleum coke. For the purposes of this subpart, this definition of ''coal'' includes synthetic fuels derived from coal including, but not limited to, solvent-refined coal, coal-oil mixtures, and coal-water mixtures. Coal derived gases are excluded from this definition.

*Coal subcategory* includes any boiler that burns any solid fossil fuel and no more than 15 percent biomass on an annual heat input basis.

*Commercial boiler* means a boiler used in commercial establishments such as hotels, restaurants, and laundries to provide electricity, steam, and/or hot water.

*Common stack* means the exhaust of emissions from two or more affected units through a single flue. Affected units with a common stack may each have separate air pollution control systems located before the common stack, or may have a single air pollution control system located after the exhausts come together in a single flue.

*Daily block average* means the arithmetic mean of all valid emission concentrations or parameter levels recorded when a unit is operating measured over the 24-hour period from 12 a.m. (midnight) to 12 a.m. (midnight), except for periods of startup and shutdown and periods when the unit is not operating.

*Deviation* (1) Means any instance in which an affected source subject to this subpart, or an owner or operator of such a source:

(i) Fails to meet any applicable requirement or obligation established by this subpart including, but not limited to, any emission limit, operating limit, or work practice standard; or

(ii) Fails to meet any term or condition that is adopted to implement an applicable requirement in this subpart and that is included in the operating permit for any affected source required to obtain such a permit.

(2) A deviation is not always a violation.

*Distillate oil* means fuel oils that contain 0.05 weight percent nitrogen or less and comply with the specifications for fuel oil numbers 1 and 2, as defined by the American Society of Testing and Materials in ASTM D396 (incorporated by reference, see §63.14) or diesel fuel oil numbers 1 and 2, as defined by the American Society for Testing

and Materials in ASTM D975 (incorporated by reference, see § 63.14), kerosene, and biodiesel as defined by the American Society of Testing and Materials in ASTM D6751–11b (incorporated by reference, see § 63.14).

*Dry scrubber* means an add-on air pollution control system that injects dry alkaline sorbent (dry injection) or sprays an alkaline sorbent (spray dryer) to react with and neutralize acid gas in the exhaust stream forming a dry powder material. Sorbent injection systems used as control devices in fluidized bed boilers are included in this definition. A dry scrubber is a dry control system.

*Electric boiler* means a boiler in which electric heating serves as the source of heat. Electric boilers that burn gaseous or liquid fuel during periods of electrical power curtailment or failure are included in this definition.

*Electric utility steam generating unit (EGU)* means a fossil fuel-fired combustion unit of more than 25 megawatts that serves a generator that produces electricity for sale. A fossil fuel-fired unit that cogenerates steam and electricity and supplies more than one-third of its potential electric output capacity and more than 25 megawatts electrical output to any utility power distribution system for sale is considered an electric utility steam generating unit. To be ''capable of combusting'' fossil fuels, an EGU would need to have these fuels allowed in their operating permits and have the appropriate fuel handling facilities on-site or otherwise available (*e.g.*, coal handling equipment, including coal storage area, belts and conveyers, pulverizers, etc.; oil storage facilities). In addition, fossil fuel-fired EGU means any EGU that fired fossil fuel for more than 10.0 percent of the average annual heat input in any 3 consecutive calendar years or for more than 15.0 percent of the annual heat input during any one calendar year after April 16, 2015.

*Electrostatic precipitator (ESP)* means an add-on air pollution control device used to capture particulate matter by charging the particles using an electrostatic field, collecting the particles using a grounded collecting surface, and transporting the particles into a hopper. An electrostatic precipitator is usually a dry control system.

*Energy assessment* means the following for the emission units covered by this subpart:

(1) The energy assessment for facilities with affected boilers with less than 0.3 trillion Btu per year (TBtu/year) heat input capacity will be 8 on-site technical labor hours in length maximum, but may be longer at the discretion of the owner or operator of the affected source. The boiler system(s) and any on-site energy use system(s) accounting for at least 50 percent of the affected boiler(s) energy (*e.g.*, steam, hot water, or electricity) production, as applicable, will be evaluated to identify energy savings opportunities, within the limit of performing an 8-hour energy assessment.

(2) The energy assessment for facilities with affected boilers with 0.3 to 1.0 TBtu/year heat input capacity will be 24 on-site technical labor hours in length maximum, but may be longer at the discretion of the owner or operator of the affected source. The boiler system(s) and any on-site energy use system(s) accounting for at least 33 percent of the affected boiler(s) energy (*e.g.*, steam, hot water, or electricity) production, as applicable, will be evaluated to identify energy savings opportunities, within the limit of performing a 24-hour energy assessment.

(3) The energy assessment for facilities with affected boilers with greater than 1.0 TBtu/year heat input capacity will be up to 24 on-site technical labor hours in length for the first TBtu/year plus 8 on-site technical labor hours for every additional 1.0 TBtu/year not to exceed 160 on-site technical hours, but may be longer at the discretion of the owner or operator of the affected source. The boiler system(s) and any on-site energy use system(s) accounting for at least 20 percent of the affected boiler(s) energy (*e.g.*, steam, hot water, or electricity) production, as applicable, will be evaluated to identify energy savings opportunities.

(4) The on-site energy use system(s) serving as the basis for the percent of affected boiler(s) energy production, as applicable, in paragraphs (1), (2), and (3) of this definition may be segmented by production area or energy use area

as most logical and applicable to the specific facility being assessed (*e.g.*, product X manufacturing area; product Y drying area; Building Z).

*Energy management program* means a program that includes a set of practices and procedures designed to manage energy use that are demonstrated by the facility's energy policies, a facility energy manager and other staffing responsibilities, energy performance measurement and tracking methods, an energy saving goal, action plans, operating procedures, internal reporting requirements, and periodic review intervals used at the facility. Facilities may establish their program through energy management systems compatible with ISO 50001.

*Energy use system* (1) Includes the following systems located on the site of the affected boiler that use energy provided by the boiler:

(i) Process heating; compressed air systems; machine drive (motors, pumps, fans); process cooling; facility heating, ventilation, and air conditioning systems; hot water systems; building envelop; and lighting; or

(ii) Other systems that use steam, hot water, process heat, or electricity, provided by the affected boiler.

(2) Energy use systems are only those systems using energy clearly produced by affected boilers.

*Equivalent* means the following only as this term is used in Table 5 to this subpart:

(1) An equivalent sample collection procedure means a published voluntary consensus standard or practice (VCS) or

EPA method that includes collection of a minimum of three composite fuel samples, with each composite consisting of a minimum of three increments collected at approximately equal intervals over the test period.

(2) An equivalent sample compositing procedure means a published VCS or EPA method to systematically mix and obtain a representative subsample (part) of the composite sample.

(3) An equivalent sample preparation procedure means a published VCS or EPA method that: Clearly states that the standard, practice or method is appropriate for the pollutant and the fuel matrix; or is cited as an appropriate sample preparation standard, practice or method for the pollutant in the chosen VCS or EPA determinative or analytical method.

(4) An equivalent procedure for determining heat content means a published VCS or EPA method to obtain gross calorific (or higher heating) value.

(5) An equivalent procedure for determining fuel moisture content means a published VCS or EPA method to obtain moisture content. If the sample analysis plan calls for determining mercury using an aliquot of the dried sample, then the drying temperature must be modified to prevent vaporizing this metal. On the other hand, if metals analysis is done on an ''as received'' basis, a separate aliquot can be dried to determine moisture content and the mercury concentration mathematically adjusted to a dry basis.

(6) An equivalent mercury determinative or analytical procedure means a published VCS or EPA method that clearly states that the standard, practice, or method is appropriate for mercury and the fuel matrix and has a published detection limit equal or lower than the methods listed in Table 5 to this subpart for the same purpose.

*Fabric filter* means an add-on air pollution control device used to capture particulate matter by filtering gas streams through filter media, also known as a baghouse. A fabric filter is a dry control system.

*Federally enforceable* means all limitations and conditions that are enforceable by the EPA Administrator, including, but not limited to, the requirements of 40 CFR parts 60, 61, 63, and 65, requirements within any applicable state implementation plan, and any permit requirements established under 40 CFR 52.21 or under 40 CFR 51.18 and 40 CFR 51.24.

*Fluidized bed boiler* means a boiler utilizing a fluidized bed combustion process that is not a pulverized coal boiler.

*Fluidized bed combustion* means a process where a fuel is burned in a bed of granulated particles, which are maintained in a mobile suspension by the forward flow of air and combustion products.

*Fossil fuel* means natural gas, oil, coal, and any form of solid, liquid, or

gaseous fuel derived from such material.

*Fuel type* means each category of fuels that share a common name or classification. Examples include, but are not limited to, bituminous coal, sub-bituminous coal, lignite, anthracite, biomass, distillate oil, residual oil. Individual fuel types received from different suppliers are not considered new fuel types.

*Gaseous fuels* includes, but is not limited to, natural gas, process gas, landfill gas, coal derived gas, refinery gas, hydrogen, and biogas.

*Gas-fired boiler* includes any boiler that burns gaseous fuels not combined with any solid fuels and burns liquid fuel only during periods of gas curtailment, gas supply interruption, startups, or for periodic testing, maintenance, or operator training on liquid fuel. Periodic testing, maintenance, or operator training on liquid fuel shall not exceed a combined total of 48 hours during any calendar year.

*Heat input* means heat derived from combustion of fuel in a boiler and does not include the heat input from preheated combustion air, recirculated flue gases, returned condensate, or exhaust gases from other sources such as gas turbines, internal combustion engines, kilns.

*Hot water heater* means a closed vessel with a capacity of no more than 120 U.S. gallons in which water is heated by combustion of gaseous, liquid, or biomass fuel and hot water is withdrawn for use external to the vessel. Hot water boilers (*i.e.*, not generating steam) combusting gaseous, liquid, or biomass fuel with a heat input capacity of less than 1.6 million Btu per hour are included in this definition. The 120 U.S. gallon capacity threshold to be considered a hot water heater is independent of the 1.6 million Btu per hour heat input capacity threshold for hot water boilers. Hot water heater also means a tankless unit that provides on-demand hot water.

*Hourly average* means the arithmetic average of at least four CMS data values representing the four 15-minute periods in an hour, or at least two 15-minute data values during an hour when CMS calibration, quality assurance, or maintenance activities are being performed.

*Industrial boiler* means a boiler used in manufacturing, processing, mining, and refining or any other industry to provide steam, hot water, and/or electricity.

*Institutional boiler* means a boiler used in institutional establishments such as, but not limited to, medical centers, nursing homes, research centers, institutions of higher education, elementary and secondary schools, libraries, religious establishments, and governmental buildings to provide electricity, steam, and/or hot water.

*Limited-use boiler* means any boiler that burns any amount of solid or liquid fuels and has a federally enforceable annual capacity factor of no more than 10 percent.

*Liquid fuel* includes, but is not limited to, distillate oil, residual oil, any form of liquid fuel derived from petroleum, used oil meeting the specification in 40 CFR 279.11, liquid biofuels, biodiesel, and vegetable oil.

*Load fraction* means the actual heat input of a boiler divided by heat input during the performance test that established the minimum sorbent injection rate or minimum activated carbon injection rate, expressed as a fraction (*e.g.*, for 50 percent load the load fraction is 0.5). For boilers that co-fire natural gas with a solid or liquid fuel, the load fraction is determined by the actual heat input of the solid or liquid fuel divided by heat input of the solid or liquid fuel fired during the performance test (*e.g.*, if the performance test was conducted at 100 percent solid fuel firing, for 100 percent load firing 50 percent solid fuel and 50 percent natural gas, the load fraction is 0.5).

*Minimum activated carbon injection rate* means load fraction multiplied by the lowest hourly average activated carbon injection rate measured according to Table 6 to this subpart during the most recent performance stack test demonstrating compliance with the applicable emission limit.

*Minimum oxygen level* means the lowest hourly average oxygen level measured according to Table 6 to this subpart during the most recent performance stack test demonstrating compliance with the applicable carbon monoxide emission limit.

*Minimum scrubber liquid flow rate* means the lowest hourly average scrubber liquid flow rate (*e.g.*, to the particulate matter scrubber) measured according to Table 6 to this subpart during the most recent performance stack test demonstrating compliance with the applicable emission limit.

*Minimum scrubber pressure drop* means the lowest hourly average scrubber pressure drop measured according to Table 6 to this subpart during the most recent performance stack test demonstrating compliance with the applicable emission limit.

*Minimum sorbent injection rate* means:

(1) The load fraction multiplied by the lowest hourly average sorbent injection rate for each sorbent measured according to Table 6 to this subpart during the most recent performance stack test demonstrating compliance with the applicable emission limits; or

(2) For fluidized bed combustion, the lowest average ratio of sorbent to sulfur measured during the most recent performance test.

*Minimum total secondary electric power* means the lowest hourly average total secondary electric power determined from the values of secondary voltage and secondary current to the electrostatic precipitator measured according to Table 6 to this subpart during the most recent performance stack test demonstrating compliance with the applicable emission limits.

*Natural gas* means:

(1) A naturally occurring mixture of hydrocarbon and nonhydrocarbon gases found in geologic formations beneath the earth's surface, of which the principal constituent is methane; or

(2) Liquefied petroleum gas, as defined by the American Society for Testing and Materials in ASTM D1835 (incorporated by reference, see §63.14); or

(3) A mixture of hydrocarbons that maintains a gaseous state at ISO conditions (*i.e.*, a temperature of 288 Kelvin, a relative humidity of 60 percent, and a pressure of 101.3 kilopascals). Additionally, natural gas must either be composed of at least 70 percent methane by volume or have a gross calorific value between 35 and 41 megajoules (MJ) per dry standard cubic meter (950 and 1,100 Btu per dry standard cubic foot); or

(4) Propane or propane-derived synthetic natural gas. Propane means a colorless gas derived from petroleum and natural gas, with the molecular structure $C_3H_8$.

*Oil subcategory* includes any boiler that burns any liquid fuel and is not in either the biomass or coal subcategories. Gas-fired boilers that burn liquid fuel only during periods of gas curtailment, gas supply interruptions, startups, or for periodic testing are not included in this definition. Periodic testing on liquid fuel shall not exceed a combined total of 48 hours during any calendar year.

*Opacity* means the degree to which emissions reduce the transmission of light and obscure the view of an object in the background.

*Operating day* means a 24-hour period between 12 midnight and the following midnight during which any fuel is combusted at any time in the boiler unit. It is not necessary for fuel to be combusted for the entire 24-hour period.

*Oxygen analyzer system* means all equipment required to determine the oxygen content of a gas stream and used to monitor oxygen in the boiler flue gas, boiler firebox, or other appropriate intermediate location. This definition includes oxygen trim systems.

*Oxygen trim system* means a system of monitors that is used to maintain excess air at the desired level in a combustion device over its operating load range. A typical system consists of a flue gas oxygen and/or carbon monoxide monitor that automatically provides a feedback signal to the combustion air controller or draft controller.

*Particulate matter (PM)* means any finely divided solid or liquid material, other than uncombined water, as measured by the test methods specified under this subpart, or an approved alternative method.

*Performance testing* means the collection of data resulting from the execution of a test method used (either by

stack testing or fuel analysis) to demonstrate compliance with a relevant emission standard.

*Period of gas curtailment or supply interruption* means a period of time during which the supply of gaseous fuel to an affected boiler is restricted or halted for reasons beyond the control of the facility. The act of entering into a contractual agreement with a supplier of natural gas established for curtailment purposes does not constitute a reason that is under the control of a facility for the purposes of this definition. An increase in the cost or unit price of natural gas due to normal market fluctuations not during periods of supplier delivery restriction does not constitute a period of natural gas curtailment or supply interruption. Onsite gaseous fuel system emergencies or equipment failures qualify as periods of supply interruption when the emergency or failure is beyond the control of the facility.

*Process heater* means an enclosed device using controlled flame, and the unit's primary purpose is to transfer heat indirectly to a process material (liquid, gas, or solid) or to a heat transfer material (e.g., glycol or a mixture of glycol and water) for use in a process unit, instead of generating steam. Process heaters are devices in which the combustion gases do not come into direct contact with process materials. Process heaters include units that heat water/water mixtures for pool heating, sidewalk heating, cooling tower water heating, power washing, or oil heating.

*Qualified energy assessor* means:

(1) Someone who has demonstrated capabilities to evaluate energy savings opportunities for steam generation and major energy using systems, including, but not limited to:

(i) Boiler combustion management.

(ii) Boiler thermal energy recovery, including

(A) Conventional feed water economizer,

(B) Conventional combustion air preheater, and

(C) Condensing economizer.

(iii) Boiler blowdown thermal energy recovery.

(iv) Primary energy resource selection, including

(A) Fuel (primary energy source) switching, and

(B) Applied steam energy versus direct-fired energy versus electricity.

(v) Insulation issues.

(vi) Steam trap and steam leak management.

(vii) Condensate recovery.

(viii) Steam end-use management.

(2) Capabilities and knowledge includes, but is not limited to:

(i) Background, experience, and recognized abilities to perform the assessment activities, data analysis, and report preparation.

(ii) Familiarity with operating and maintenance practices for steam or process heating systems.

(iii) Additional potential steam system improvement opportunities including improving steam turbine operations and reducing steam demand.

(iv) Additional process heating system opportunities including effective utilization of waste heat and use of proper process heating methods.

(v) Boiler-steam turbine cogeneration systems.

(vi) Industry specific steam end-use systems.

*Regulated gas stream* means an offgas stream that is routed to a boiler for the purpose of achieving compliance with a standard under another subpart of this part or part 60, part 61, or part 65 of this chapter.

*Residential boiler* means a boiler used to provide heat and/or hot water and/or as part of a residential combined heat and power system. This definition includes boilers located at an institutional facility (*e.g.*, university campus, military base, church grounds) or commercial/industrial facility (*e.g.*, farm) used primarily to provide heat and/or hot water for:

(1) A dwelling containing four or fewer families, or

(2) A single unit residence dwelling that has since been converted or subdivided into condominiums or apartments.

*Residual oil* means crude oil, fuel oil that does not comply with the specifications under the definition of distillate oil, and all fuel oil numbers 4, 5, and 6, as defined by the American Society of Testing and Materials in ASTM

D396–10 (incorporated by reference, see § 63.14(b)).

*Responsible official* means responsible official as defined in § 70.2.

*Seasonal boiler* means a boiler that undergoes a shutdown for a period of at least 7 consecutive months (or 210 consecutive days) each 12-month period due to seasonal conditions, except for periodic testing. Periodic testing shall not exceed a combined total of 15 days during the 7-month shutdown. This definition only applies to boilers that would otherwise be included in the biomass subcategory or the oil subcategory.

*Shutdown* means the period in which cessation of operation of a boiler is initiated for any purpose. Shutdown begins when the boiler no longer supplies useful thermal energy (such as steam or hot water) for heating, cooling, or process purposes or generates electricity, or when no fuel is being fed to the boiler, whichever is earlier. Shutdown ends when the boiler no longer supplies useful thermal energy (such as steam or hot water) for heating, cooling, or process purposes or generates electricity, and no fuel is being combusted in the boiler.

*Solid fossil fuel* includes, but is not limited to, coal, coke, petroleum coke, and tire-derived fuel.

*Solid fuel* means any solid fossil fuel or biomass or bio-based solid fuel.

*Startup* means:

(1) Either the first-ever firing of fuel in a boiler for the purpose of supplying useful thermal energy (such as steam or hot water) for heating and/or producing electricity, or for any other purpose, or the firing of fuel in a boiler after a shutdown event for any purpose. Startup ends when any of the useful thermal energy (such as steam or hot water) from the boiler is supplied for heating and/or producing electricity, or for any other purpose, or

(2) The period in which operation of a boiler is initiated for any purpose. Startup begins with either the first-ever firing of fuel in a boiler for the purpose of supplying useful thermal energy (such as steam or hot water) for heating, cooling or process purposes or producing electricity, or the firing of fuel in a boiler for any purpose after a shutdown event. Startup ends 4 hours after when the boiler supplies useful thermal energy (such as steam or hot water) for heating, cooling, or process purposes or generates electricity, whichever is earlier.

*Temporary boiler* means any gaseous or liquid fuel boiler that is designed to, and is capable of, being carried or moved from one location to another by means of, for example, wheels, skids, carrying handles, dollies, trailers, or platforms. A boiler is not a temporary boiler if any one of the following conditions exists:

(1) The equipment is attached to a foundation.

(2) The boiler or a replacement remains at a location within the facility and performs the same or similar function for more than 12 consecutive months, unless the regulatory agency approves an extension. An extension may be granted by the regulating agency upon petition by the owner or operator of a unit specifying the basis for such a request. Any temporary boiler that replaces a temporary boiler at a location within the facility and performs the same or similar function will be included in calculating the consecutive time period unless there is a gap in operation of 12 months or more.

(3) The equipment is located at a seasonal facility and operates during the full annual operating period of the seasonal facility, remains at the facility for at least 2 years, and operates at that facility for at least 3 months each year.

(4) The equipment is moved from one location to another within the facility but continues to perform the same or similar function and serve the same electricity, steam, and/or hot water system in an attempt to circumvent the residence time requirements of this definition.

*Tune-up* means adjustments made to a boiler in accordance with the procedures outlined in § 63.11223(b).

*Ultra-low-sulfur liquid fuel* means a distillate oil that has less than or equal to 15 parts per million (ppm) sulfur.

*Useful thermal energy* means energy (*i.e.*, steam or hot water) that meets the minimum operating temperature, flow, and/or pressure required by any

energy use system that uses energy provided by the affected boiler.

*Vegetable oil* means oils extracted from vegetation.

*Voluntary Consensus Standards (VCS)* mean technical standards (*e.g.*, materials specifications, test methods, sampling procedures, business practices) developed or adopted by one or more voluntary consensus bodies. EPA/Office of Air Quality Planning and Standards, by precedent, has only used VCS that are written in English. Examples of VCS bodies are: American Society of Testing and Materials (ASTM, 100 Barr Harbor Drive, P.O. Box CB700, West Conshohocken, Pennsylvania 19428–B2959, (800) 262–1373, *http://www.astm.org*), American Society of Mechanical Engineers (ASME, Three Park Avenue, New York, NY 10016–5990, (800) 843–2763, *http://www.asme.org)*, International Standards Organization (ISO 1, ch. de la Voie-Creuse, Case postale 56, CH–1211 Geneva 20, Switzerland, +41 22 749 01 11, *http://www.iso.org/iso/home.htm*), Standards Australia (AS Level 10, The Exchange Centre, 20 Bridge Street, Sydney, GPO Box 476, Sydney NSW 2001, +61 2 9237 6171 *http://www.standards.org.au*), British Standards Institution (BSI, 389 Chiswick High Road, London, W4 4AL, United Kingdom, +44 (0)20 8996 9001, *http://www.bsigroup.com*), Canadian Standards Association (CSA, 5060 Spectrum Way, Suite 100, Mississauga, Ontario L4W 5N6, Canada, 800–463–6727, *http://www.csa.ca*), European Committee for Standardization (CEN CENELEC Management Centre Avenue Marnix 17 B–1000 Brussels, Belgium +32 2 550 08 11, *http://www.cen.eu/cen*), and German Engineering Standards (VDI Guidelines Department, P.O. Box 10 11 39 40002, Duesseldorf, Germany, +49 211 6214–230, *http://www.vdi.eu*). The types of standards that are not considered VCS are standards developed by: the United States, *e.g.*, California Air Resources Board (CARB) and Texas Commission on Environmental Quality (TCEQ); industry groups, such as American Petroleum Institute (API), Gas Processors Association (GPA), and Gas Research Institute (GRI); and other branches of the U.S. Government, *e.g.*, Department of Defense (DOD) and Department of Transportation (DOT). This does not preclude EPA from using standards developed by groups that are not VCS bodies within their rule. When this occurs, EPA has done searches and reviews for VCS equivalent to these non-EPA methods.

*Waste heat boiler* means a device that recovers normally unused energy (*i.e.*, hot exhaust gas) and converts it to usable heat. Waste heat boilers are also referred to as heat recovery steam generators. Waste heat boilers are heat exchangers generating steam from incoming hot exhaust gas from an industrial (*e.g.*, thermal oxidizer, kiln, furnace) or power (*e.g.*, combustion turbine, engine) equipment. Duct burners are sometimes used to increase the temperature of the incoming hot exhaust gas.

*Wet scrubber* means any add-on air pollution control device that mixes an aqueous stream or slurry with the exhaust gases from a boiler to control emissions of particulate matter or to absorb and neutralize acid gases, such as hydrogen chloride. A wet scrubber creates an aqueous stream or slurry as a byproduct of the emissions control process.

*Work practice standard* means any design, equipment, work practice, or operational standard, or combination thereof, which is promulgated pursuant to section 112(h) of the Clean Air Act.

[76 FR 15591, Mar. 21, 2011, as amended at 78 FR 7513, Feb. 1, 2013; 81 FR 63128, Sept. 14, 2016]

TABLE 1 TO SUBPART JJJJJJ OF PART 63—EMISSION LIMITS

As stated in § 63.11201, you must comply with the following applicable emission limits:

| If your boiler is in this subcategory . . . | For the following pollutants . . . | You must achieve less than or equal to the following emission limits, except during periods of startup and shutdown . . . |
|---|---|---|
| 1. New coal-fired boilers with heat input capacity of 30 million British thermal units per hour (MMBtu/hr) or greater that do not meet the definition of limited-use boiler. | a. PM (Filterable) ..... | 3.0E–02 pounds(lb) per million British thermal units (MMBtu) of heat input. |
| | b. Mercury | 2.2E–05 lb per MMBtu of heat input. |
| | c. CO | 420 parts per million (ppm) by volume on a dry basis corrected to 3 percent oxygen (3-run average or 10-day rolling average). |
| 2. New coal-fired boilers with heat input capacity of between 10 and 30 MMBtu/hr that do not meet the definition of limited-use boiler. | a. PM (Filterable) ..... | 4.2E–01 lb per MMBtu of heat input. |
| | b. Mercury | 2.2E–05 lb per MMBtu of heat input. |
| | c. CO | 420 ppm by volume on a dry basis corrected to 3 percent oxygen (3-run average or 10-day rolling average). |
| 3. New biomass-fired boilers with heat input capacity of 30 MMBtu/hr or greater that do not meet the definition of seasonal boiler or limited-use boiler. | PM (Filterable) ..... | 3.0E–02 lb per MMBtu of heat input. |
| 4. New biomass fired boilers with heat input capacity of between 10 and 30 MMBtu/hr that do not meet the definition of seasonal boiler or limited-use boiler. | PM (Filterable) ..... | 7.0E–02 lb per MMBtu of heat input. |
| 5. New oil-fired boilers with heat input capacity of 10 MMBtu/hr or greater that do not meet the definition of seasonal boiler or limited-use boiler. | PM (Filterable) ..... | 3.0E–02 lb per MMBtu of heat input. |
| 6. Existing coal-fired boilers with heat input capacity of 10 MMBtu/hr or greater that do not meet the definition of limited-use boiler. | a. Mercury ..... | 2.2E–05 lb per MMBtu of heat input. |
| | b. CO ..... | 420 ppm by volume on a dry basis corrected to 3 percent oxygen (3-run average or 10-day rolling average). |

[78 FR 7517, Feb. 1, 2013, as amended at 81 FR 63130, Sept. 14, 2016]

## Table 2 to Subpart JJJJJJ of Part 63—Work Practice Standards, Emission Reduction Measures, and Management Practices

As stated in § 63.11201, you must comply with the following applicable work practice standards, emission reduction measures, and management practices:

| If your boiler is in this subcategory . . . | You must meet the following . . . |
|---|---|
| 1. Existing or new coal-fired, new biomass-fired, or new oil-fired boilers (units with heat input capacity of 10 MMBtu/hr or greater). | Minimize the boiler's startup and shutdown periods and conduct startups and shutdowns according to the manufacturer's recommended procedures. If manufacturer's recommended procedures are not available, you must follow recommended procedures for a unit of similar design for which manufacturer's recommended procedures are available. |
| 2. Existing coal-fired boilers with heat input capacity of less than 10 MMBtu/hr that do not meet the definition of limited-use boiler, or use an oxygen trim system that maintains an optimum air-to-fuel ratio. | Conduct an initial tune-up as specified in § 63.11214, and conduct a tune-up of the boiler biennially as specified in § 63.11223. |
| 3. New coal-fired boilers with heat input capacity of less than 10 MMBtu/hr that do not meet the definition of limited-use boiler, or use an oxygen trim system that maintains an optimum air-to-fuel ratio. | Conduct a tune-up of the boiler biennially as specified in § 63.11223. |
| 4. Existing oil-fired boilers with heat input capacity greater than 5 MMBtu/hr that do not meet the definition of seasonal boiler or limited-use boiler, or use an oxygen trim system that maintains an optimum air-to-fuel ratio. | Conduct an initial tune-up as specified in § 63.11214, and conduct a tune-up of the boiler biennially as specified in § 63.11223. |
| 5. New oil-fired boilers with heat input capacity greater than 5 MMBtu/hr that do not meet the definition of seasonal boiler or limited-use boiler, or use an oxygen trim system that maintains an optimum air-to-fuel ratio. | Conduct a tune-up of the boiler biennially as specified in § 63.11223. |

| If your boiler is in this subcategory . . . | You must meet the following . . . |
|---|---|
| 6. Existing biomass-fired boilers that do not meet the definition of seasonal boiler or limited-use boiler, or use an oxygen trim system that maintains an optimum air-to-fuel ratio. | Conduct an initial tune-up as specified in § 63.11214, and conduct a tune-up of the boiler biennially as specified in § 63.11223. |
| 7. New biomass-fired boilers that do not meet the definition of seasonal boiler or limited-use boiler, or use an oxygen trim system that maintains an optimum air-to-fuel ratio. | Conduct a tune-up of the boiler biennially as specified in § 63.11223. |
| 8. Existing seasonal boilers | Conduct an initial tune-up as specified in § 63.11214, and conduct a tune-up of the boiler every 5 years as specified in § 63.11223. |
| 9. New seasonal boilers | Conduct a tune-up of the boiler every 5 years as specified in § 63.11223. |
| 10. Existing limited-use boilers | Conduct an initial tune-up as specified in § 63.11214, and conduct a tune-up of the boiler every 5 years as specified in § 63.11223. |
| 11. New limited-use boilers | Conduct a tune-up of the boiler every 5 years as specified in § 63.11223. |
| 12. Existing oil-fired boilers with heat input capacity of equal to or less than 5 MMBtu/hr. | Conduct an initial tune-up as specified in § 63.11214, and conduct a tune-up of the boiler every 5 years as specified in § 63.11223. |
| 13. New oil-fired boilers with heat input capacity of equal to or less than 5 MMBtu/hr. | Conduct a tune-up of the boiler every 5 years as specified in § 63.11223. |
| 14. Existing coal-fired, biomass-fired, or oil-fired boilers with an oxygen trim system that maintains an optimum air-to-fuel ratio that would otherwise be subject to a biennial tune-up. | Conduct an initial tune-up as specified in § 63.11214, and conduct a tune-up of the boiler every 5 years as specified in § 63.11223. |
| 15. New coal-fired, biomass-fired, or oil-fired boilers with an oxygen trim system that maintains an optimum air-to-fuel ratio that would otherwise be subject to a biennial tune-up. | Conduct a tune-up of the boiler every 5 years as specified in § 63.11223. |
| 16. Existing coal-fired, biomass-fired, or oil-fired boilers (units with heat input capacity of 10 MMBtu/hr and greater), not including limited-use boilers. | Must have a one-time energy assessment performed by a qualified energy assessor. An energy assessment completed on or after January 1, 2008, that meets or is amended to meet the energy assessment requirements in this table satisfies the energy assessment requirement. Energy assessor approval and qualification requirements are waived in instances where past or amended energy assessments are used to meet the energy assessment requirements. A facility that operated under an energy management program developed according to the ENERGY STAR guidelines for energy management or compatible with ISO 50001 for at least 1 year between January 1, 2008, and the compliance date specified in § 63.11196 that includes the affected units also satisfies the energy assessment requirement. The energy assessment must include the following with extent of the evaluation for items (1) to (4) appropriate for the on-site technical hours listed in § 63.11237:<br>(1) A visual inspection of the boiler system,<br>(2) An evaluation of operating characteristics of the affected boiler systems, specifications of energy use systems, operating and maintenance procedures, and unusual operating constraints,<br>(3) An inventory of major energy use systems consuming energy from affected boiler(s) and which are under control of the boiler owner or operator,<br>(4) A review of available architectural and engineering plans, facility operation and maintenance procedures and logs, and fuel usage,<br>(5) A list of major energy conservation measures that are within the facility's control,<br>(6) A list of the energy savings potential of the energy conservation measures identified, and<br>(7) A comprehensive report detailing the ways to improve efficiency, the cost of specific improvements, benefits, and the time frame for recouping those investments. |

[78 FR 7518, Feb. 1, 2013, as amended at 81 FR 63129, Sept. 14, 2016]

## Table 3 to Subpart JJJJJJ of Part 63—Operating Limits for Boilers With Emission Limits

As stated in § 63.11201, you must comply with the applicable operating limits:

| If you demonstrate compliance with applicable emission limits using . . . | You must meet these operating limits except during periods of startup and shutdown . . . |
|---|---|
| 1. Fabric filter control | a. Maintain opacity to less than or equal to 10 percent opacity (daily block average); OR<br>b. Install and operate a bag leak detection system according to § 63.11224 and operate the fabric filter such that the bag leak detection system alarm does not sound more than 5 percent of the operating time during each 6-month period. |
| 2. Electrostatic precipitator control | a. Maintain opacity to less than or equal to 10 percent opacity (daily block average); OR<br>b. Maintain the 30-day rolling average total secondary electric power of the electrostatic precipitator at or above the minimum total secondary electric power as defined in § 63.11237. |
| 3. Wet scrubber control | Maintain the 30-day rolling average pressure drop across the wet scrubber at or above the minimum scrubber pressure drop as defined in § 63.11237 and the 30-day rolling average liquid flow rate at or above the minimum scrubber liquid flow rate as defined in § 63.11237. |
| 4. Dry sorbent or activated carbon injection control. | Maintain the 30-day rolling average sorbent or activated carbon injection rate at or above the minimum sorbent injection rate or minimum activated carbon injection rate as defined in § 63.11237. When your boiler operates at lower loads, multiply your sorbent or activated carbon injection rate by the load fraction (*e.g.,* actual heat input divided by the heat input during the performance stack test; for 50 percent load, multiply the injection rate operating limit by 0.5). |
| 5. Any other add-on air pollution control type.. | This option is for boilers that operate dry control systems. Boilers must maintain opacity to less than or equal to 10 percent opacity (daily block average). |
| 6. Fuel analysis | Maintain the fuel type or fuel mixture (annual average) such that the mercury emission rate calculated according to § 63.11211(c) are less than the applicable emission limit for mercury. |
| 7. Performance stack testing | For boilers that demonstrate compliance with a performance stack test, maintain the operating load of each unit such that it does not exceed 110 percent of the average operating load recorded during the most recent performance stack test. |
| 8. Oxygen analyzer system | For boilers subject to a CO emission limit that demonstrate compliance with an oxygen analyzer system as specified in § 63.11224(a), maintain the 30-day rolling average oxygen level at or above the minimum oxygen level as defined in § 63.11237. This requirement does not apply to units that install an oxygen trim system since these units will set the trim system to the level specified in § 63.11224(a)(7). |

[78 FR 7519, Feb. 1, 2013]

## Table 4 to Subpart JJJJJJ of Part 63—Performance (Stack) Testing Requirements

As stated in § 63.11212, you must comply with the following requirements for performance (stack) test for affected sources:

| To conduct a performance test for the following pollutant. . . | You must. . . | Using. . . |
|---|---|---|
| 1. Particulate Matter | a. Select sampling ports location and the number of traverse points. | Method 1 in appendix A–1 to part 60 of this chapter. |
| | b. Determine velocity and volumetric flow-rate of the stack gas. | Method 2, 2F, or 2G in appendix A–2 to part 60 of this chapter. |
| | c. Determine oxygen and carbon dioxide concentrations of the stack gas. | Method 3A or 3B in appendix A–2 to part 60 of this chapter, or ASTM D6522–00 (Reapproved 2005),[a] or ANSI/ASME PTC 19.10–1981.[a] |
| | d. Measure the moisture content of the stack gas. | Method 4 in appendix A–3 to part 60 of this chapter. |
| | e. Measure the particulate matter emission concentration. | Method 5 or 17 (positive pressure fabric filters must use Method 5D) in appendix A–3 and A–6 to part 60 of this chapter and a minimum 1 dscm of sample volume per run. |
| | f. Convert emissions concentration to lb/MMBtu emission rates. | Method 19 F-factor methodology in appendix A–7 to part 60 of this chapter. |
| 2. Mercury | a. Select sampling ports location and the number of traverse points. | Method 1 in appendix A–1 to part 60 of this chapter. |
| | b. Determine velocity and volumetric flow-rate of the stack gas. | Method 2, 2F, or 2G in appendix A–2 to part 60 of this chapter. |

| To conduct a performance test for the following pollutant. . . | You must. . . | Using. . . |
|---|---|---|
| | c. Determine oxygen and carbon dioxide concentrations of the stack gas. | Method 3A or 3B in appendix A–2 to part 60 of this chapter, or ASTM D6522–00 (Reapproved 2005),[a] or ANSI/ASME PTC 19.10–1981.[a] |
| | d. Measure the moisture content of the stack gas. | Method 4 in appendix A–3 to part 60 of this chapter. |
| | e. Measure the mercury emission concentration. | Method 29, 30A, or 30B in appendix A–8 to part 60 of this chapter or Method 101A in appendix B to part 61 of this chapter or ASTM Method D6784–02.[a] Collect a minimum 2 dscm of sample volume with Method 29 of 101A per run. Use a minimum run time of 2 hours with Method 30A. |
| | f. Convert emissions concentration to lb/MMBtu emission rates. | Method 19 F-factor methodology in appendix A–7 to part 60 of this chapter. |
| 3. Carbon Monoxide | a. Select the sampling ports location and the number of traverse points. | Method 1 in appendix A–1 to part 60 of this chapter. |
| | b. Determine oxygen and carbon dioxide concentrations of the stack gas. | Method 3A or 3B in appendix A–2 to part 60 of this chapter, or ASTM D6522–00 (Reapproved 2005),[a] or ANSI/ASME PTC 19.10–1981.[a] |
| | c. Measure the moisture content of the stack gas. | Method 4 in appendix A–3 to part 60 of this chapter. |
| | d. Measure the carbon monoxide emission concentration. | Method 10, 10A, or 10B in appendix A–4 to part 60 of this chapter or ASTM D6522–00 (Reapproved 2005)[a] and a minimum 1 hour sampling time per run. |

[a] Incorporated by reference, see § 63.14.

## TABLE 5 TO SUBPART JJJJJJ OF PART 63—FUEL ANALYSIS REQUIREMENTS

As stated in § 63.11213, you must comply with the following requirements for fuel analysis testing for affected sources:

| To conduct a fuel analysis for the following pollutant . . . | You must. . . | Using . . . |
|---|---|---|
| 1. Mercury | a. Collect fuel samples | Procedure in § 63.11213(b) or ASTM D2234/D2234M[a] (for coal) or ASTM D6323[a] (for biomass) or equivalent. |
| | b. Compose fuel samples | Procedure in § 63.11213(b) or equivalent. |
| | c. Prepare composited fuel samples | EPA SW–846–3050B[a] (for solid samples) or EPA SW–846–3020A[a] (for liquid samples) or ASTM D2013/D2013M[a] (for coal) or ASTM D5198[a] (for biomass) or equivalent. |
| | d. Determine heat content of the fuel type. | ASTM D5865[a] (for coal) or ASTM E711[a] (for biomass) or equivalent. |
| | e. Determine moisture content of the fuel type | ASTM D3173[a] or ASTM E871[a] or equivalent. |
| | f. Measure mercury concentration in fuel sample | ASTM D6722[a] (for coal) or EPA SW–846–7471B[a] (for solid samples) or EPA SW–846–7470A[a] (for liquid samples) or equivalent. |
| | g. Convert concentrations into units of lb/MMBtu of heat content | |

[a] Incorporated by reference, see § 63.14.

## TABLE 6 TO SUBPART JJJJJJ OF PART 63—ESTABLISHING OPERATING LIMITS

As stated in § 63.11211, you must comply with the following requirements for establishing operating limits:

| If you have an applicable emission limit for . . . | And your operating limits are based on . . . | You must . . . | Using . . . | According to the following requirements |
|---|---|---|---|---|
| 1. PM or mercury. | a. Wet scrubber operating parameters. | Establish site-specific minimum scrubber pressure drop and minimum scrubber liquid flow rate operating limits according to § 63.11211(b). | Data from the pressure drop and liquid flow rate monitors and the PM or mercury performance stack tests. | (a) You must collect pressure drop and liquid flow rate data every 15 minutes during the entire period of the performance stack tests;<br>(b) Determine the average pressure drop and liquid flow rate for each individual test run in the three-run performance stack test by computing the average of all the 15-minute readings taken during each test run. |
| | b. Electrostatic precipitator operating parameters. | Establish a site-specific minimum total secondary electric power operating limit according to § 63.11211(b). | Data from the secondary electric power monitors and the PM or mercury performance stack tests. | (a) You must collect secondary electric power data every 15 minutes during the entire period of the performance stack tests;<br>(b) Determine the average total secondary electric power for each individual test run in the three-run performance stack test by computing the average of all the 15-minute readings taken during each test run. |
| 2. Mercury ..... | Dry sorbent or activated carbon injection rate operating parameters. | Establish a site-specific minimum sorbent or activated carbon injection rate operating limit according to § 63.11211(b). | Data from the sorbent or activated carbon injection rate monitors and the mercury performance stack tests. | (a) You must collect sorbent or activated carbon injection rate data every 15 minutes during the entire period of the performance stack tests;<br>(b) Determine the average sorbent or activated carbon injection rate for each individual test run in the three-run performance stack test by computing the average of all the 15-minute readings taken during each test run.<br>(c) When your unit operates at lower loads, multiply your sorbent or activated carbon injection rate by the load fraction, as defined in § 63.11237, to determine the required injection rate. |
| 3. CO ..... | Oxygen ..... | Establish a unit-specific limit for minimum oxygen level. | Data from the oxygen analyzer system specified in § 63.11224(a). | (a) You must collect oxygen data every 15 minutes during the entire period of the performance stack tests;<br>(b) Determine the average hourly oxygen concentration for each individual test run in the three-run performance stack test by computing the average of all the 15-minute readings taken during each test run. |
| 4. Any pollutant for which compliance is demonstrated by a performance stack test. | Boiler operating load. | Establish a unit-specific limit for maximum operating load according to § 63.11212(c). | Data from the operating load monitors (fuel feed monitors or steam generation monitors). | (a) You must collect operating load data (fuel feed rate or steam generation data) every 15 minutes during the entire period of the performance test.<br>(b) Determine the average operating load by computing the hourly averages using all of the 15-minute readings taken during each performance test. |

| If you have an applicable emission limit for . . . | And your operating limits are based on . . . | You must . . . | Using . . . | According to the following requirements |
|---|---|---|---|---|
| | | | | (c) Determine the average of the three test run averages during the performance test, and multiply this by 1.1 (110 percent) as your operating limit. |

[78 FR 7520, Feb. 1, 2013, as amended at 81 FR 63130, Sept. 14, 2016]

## TABLE 7 TO SUBPART JJJJJJ OF PART 63—DEMONSTRATING CONTINUOUS COMPLIANCE

As stated in § 63.11222, you must show continuous compliance with the emission limitations for affected sources according to the following:

| If you must meet the following operating limits . . . | You must demonstrate continuous compliance by . . . |
|---|---|
| 1. Opacity | a. Collecting the opacity monitoring system data according to § 63.11224(e) and § 63.11221; and<br>b. Reducing the opacity monitoring data to 6-minute averages; and<br>c. Maintaining opacity to less than or equal to 10 percent (daily block average). |
| 2. Fabric Filter Bag Leak Detection Operation. | Installing and operating a bag leak detection system according to § 63.11224(f) and operating the fabric filter such that the requirements in § 63.11222(a)(4) are met. |
| 3. Wet Scrubber Pressure Drop and Liquid Flow Rate. | a. Collecting the pressure drop and liquid flow rate monitoring system data according to §§ 63.11224 and 63.11221; and<br>b. Reducing the data to 30-day rolling averages; and<br>c. Maintaining the 30-day rolling average pressure drop and liquid flow rate at or above the minimum pressure drop and minimum liquid flow rate according to § 63.11211. |
| 4. Dry Scrubber Sorbent or Activated Carbon Injection Rate. | a. Collecting the sorbent or activated carbon injection rate monitoring system data for the dry scrubber according to §§ 63.11224 and 63.11221; and<br>b. Reducing the data to 30-day rolling averages; and<br>c. Maintaining the 30-day rolling average sorbent or activated carbon injection rate at or above the minimum sorbent or activated carbon injection rate according to § 63.11211. |
| 5. Electrostatic Precipitator Total Secondary Electric Power. | a. Collecting the total secondary electric power monitoring system data for the electrostatic precipitator according to §§ 63.11224 and 63.11221; and<br>b. Reducing the data to 30-day rolling averages; and<br>c. Maintaining the 30-day rolling average total secondary electric power at or above the minimum total secondary electric power according to § 63.11211. |
| 6. Fuel Pollutant Content | a. Only burning the fuel types and fuel mixtures used to demonstrate compliance with the applicable emission limit according to § 63.11213 as applicable; and<br>b. Keeping monthly records of fuel use according to §§ 63.11222(a)(2) and 63.11225(b)(4). |
| 7. Oxygen content | a. Continuously monitoring the oxygen content of flue gas according to § 63.11224 (This requirement does not apply to units that install an oxygen trim system since these units will set the trim system to the level specified in § 63.11224(a)(7)); and<br>b. Reducing the data to 30-day rolling averages; and<br>c. Maintaining the 30-day rolling average oxygen content at or above the minimum oxygen level established during the most recent CO performance test. |
| 8. CO emissions | a. Continuously monitoring the CO concentration in the combustion exhaust according to §§ 63.11224 and 63.11221; and<br>b. Correcting the data to 3 percent oxygen, and reducing the data to 1-hour averages; and<br>c. Reducing the data from the hourly averages to 10-day rolling averages; and<br>d. Maintaining the 10-day rolling average CO concentration at or below the applicable emission limit in Table 1 to this subpart. |
| 9. Boiler operating load | a. Collecting operating load data (fuel feed rate or steam generation data) every 15 minutes; and<br>b. Reducing the data to 30-day rolling averages; and<br>c. Maintaining the 30-day rolling average at or below the operating limit established during the performance test according to § 63.11212(c) and Table 6 to this subpart. |

[78 FR 7521, Feb. 1, 2013]

TABLE 8 TO SUBPART JJJJJJ OF PART 63—APPLICABILITY OF GENERAL PROVISIONS TO SUBPART JJJJJJ

As stated in §63.11235, you must comply with the applicable General Provisions according to the following:

| General provisions cite | Subject | Does it apply? |
|---|---|---|
| §63.1 | Applicability | Yes. |
| §63.2 | Definitions | Yes. Additional terms defined in §63.11237. |
| §63.3 | Units and Abbreviations | Yes. |
| §63.4 | Prohibited Activities and Circumvention. | Yes. |
| §63.5 | Preconstruction Review and Notification Requirements. | No |
| §63.6(a), (b)(1)–(b)(5), (b)(7), (c), (f)(2)–(3), (g), (i), (j). | Compliance with Standards and Maintenance Requirements. | Yes. |
| §63.6(e)(1)(i) | General Duty to minimize emissions. | No. *See* §63.11205 for general duty requirement. |
| §63.6(e)(1)(ii) | Requirement to correct malfunctions ASAP. | No. |
| §63.6(e)(3) | SSM Plan | No. |
| §63.6(f)(1) | SSM exemption | No. |
| §63.6(h)(1) | SSM exemption | No. |
| §63.6(h)(2) to (9) | Determining compliance with opacity emission standards. | Yes. |
| §63.7(a), (b), (c), (d) , (e)(2)–(e)(9), (f), (g), and (h) | Performance Testing Requirements | Yes. |
| §63.7(e)(1) | Performance testing | No. *See* §63.11210. |
| §63.8(a), (b), (c)(1), (c)(1)(ii), (c)(2) to (c)(9), (d)(1) and (d)(2), (e),(f), and (g). | Monitoring Requirements | Yes. |
| §63.8(c)(1)(i) | General duty to minimize emissions and CMS operation. | No. |
| §63.8(c)(1)(iii) | Requirement to develop SSM Plan for CMS. | No. |
| §63.8(d)(3) | Written procedures for CMS | Yes, except for the last sentence, which refers to an SSM plan. SSM plans are not required. |
| §63.9 | Notification Requirements | Yes, excluding the information required in §63.9(h)(2)(i)(B), (D), (E) and (F). See §63.11225. |
| §63.10(a) and (b)(1) | Recordkeeping and Reporting Requirements. | Yes. |
| §63.10(b)(2)(i) | Recordkeeping of occurrence and duration of startups or shutdowns. | No. |
| §63.10(b)(2)(ii) | Recordkeeping of malfunctions | No. *See* §63.11225 for recordkeeping of (1) occurrence and duration and (2) actions taken during malfunctions. |
| §63.10(b)(2)(iii) | Maintenance records | Yes. |
| §63.10(b)(2)(iv) and (v) | Actions taken to minimize emissions during SSM. | No. |
| §63.10(b)(2)(vi) | Recordkeeping for CMS malfunctions. | Yes. |
| §63.10(b)(2)(vii) to (xiv) | Other CMS requirements | Yes. |
| §63.10(b)(3) | Recordkeeping requirements for applicability determinations. | No. |
| §63.10(c)(1) to (9) | Recordkeeping for sources with CMS. | Yes. |
| §63.10(c)(10) | Recording nature and cause of malfunctions. | No. *See* §63.11225 for malfunction recordkeeping requirements. |
| §63.10(c)(11) | Recording corrective actions | No. *See* §63.11225 for malfunction recordkeeping requirements. |
| §63.10(c)(12) and (13) | Recordkeeping for sources with CMS. | Yes. |
| §63.10(c)(15) | Allows use of SSM plan | No. |
| §63.10(d)(1) and (2) | General reporting requirements | Yes. |
| §63.10(d)(3) | Reporting opacity or visible emission observation results. | No. |
| §63.10(d)(4) | Progress reports under an extension of compliance. | Yes. |

| General provisions cite | Subject | Does it apply? |
|---|---|---|
| § 63.10(d)(5) | SSM reports | No. *See* § 63.11225 for malfunction reporting requirements. |
| § 63.10(e) | Additional reporting requirements for sources with CMS. | Yes. |
| § 63.10(f) | Waiver of recordkeeping or reporting requirements. | Yes. |
| § 63.11 | Control Device Requirements | No. |
| § 63.12 | State Authority and Delegation | Yes. |
| § 63.13–63.16 | Addresses, Incorporation by Reference, Availability of Information, Performance Track Provisions. | Yes. |
| § 63.1(a)(5), (a)(7)–(a)(9), (b)(2), (c)(3)–(4), (d), 63.6(b)(6), (c)(3), (c)(4), (d), (e)(2), (e)(3)(ii), (h)(3), (h)(5)(iv), 63.8(a)(3), 63.9(b)(3), (h)(4), 63.10(c)(2)–(4), (c)(9). | Reserved | No. |

[76 FR 15591, Mar. 21, 2011, as amended at 78 FR 7521, Feb. 1, 2013]

## Subpart KKKKKK [Reserved]

## Subpart LLLLLL—National Emission Standards for Hazardous Air Pollutants for Acrylic and Modacrylic Fibers Production Area Sources

SOURCE: 72 FR 38899, July 16, 2007, unless otherwise noted.

APPLICABILITY AND COMPLIANCE DATES

### § 63.11393 Am I subject to this subpart?

(a) You are subject to this subpart if you own or operate an acrylic or modacrylic fibers production plant that is an area source of hazardous air pollutant (HAP) emissions.

(b) This subpart applies to each new or existing affected source. The affected source is each acrylic or modacrylic fibers plant.

(1) An affected source is existing if you commenced construction or reconstruction of the affected source on or before April 4, 2007.

(2) An affected source is new if you commenced construction or reconstruction of the affected source after April 4, 2007.

(c) This subpart does not apply to research and development facilities, as defined in section 112(c)(7) of the Clean Air Act (CAA).

(d) You are exempt from the obligation to obtain a permit under 40 CFR part 70 or 40 CFR part 71, provided you are not otherwise required by law to obtain a permit under 40 CFR 70.3(a) or 40 CFR 71.3(a). Notwithstanding the previous sentence, you must continue to comply with the provisions of this subpart.

### § 63.11394 What are my compliance dates?

(a) If you own or operate an existing affected source, you must achieve compliance with the applicable provisions in this subpart no later than January 16, 2008.

(b) If you startup a new affected source on or before July 16, 2007, you must achieve compliance with the applicable provisions of this subpart not later than July 16, 2007.

(c) If you startup a new affected source after July 16, 2007, you must achieve compliance with the provisions in this subpart upon startup of your affected source.

STANDARDS AND COMPLIANCE REQUIREMENTS

### § 63.11395 What are the standards and compliance requirements for existing sources?

(a) You must operate and maintain capture or enclosure systems that collect the gases and fumes containing acrylonitrile (AN) released from polymerization process equipment and monomer recovery process equipment and convey the collected gas stream through a closed vent system to a control device.

(b) Except as provided in paragraph (b)(3) of this section, you must not discharge to the atmosphere through any

combination of stacks or other vents captured gases containing AN in excess of the emissions limits in paragraphs (b)(1) and (2) of this section.

(1) 0.2 pounds of AN per hour (lb/hr) from the control device for polymerization process equipment.

(2) 0.05 lb/hr of AN from the control device for monomer recovery process equipment.

(3) If you do not comply with the emissions limits in paragraphs (b)(1) and (2) of this section, you must comply with the new source standards for process vents in §63.11396(a).

(c) If you use a wet scrubber control device, you must comply with the control device parameter operating limits in paragraphs (c)(1) and (2) of this section.

(1) You must maintain the daily average water flow rate to a wet scrubber used to control polymerization process equipment at a minimum of 50 liters per minute (l/min). If the water flow to the wet scrubber ceases, the polymerization reactor(s) must be shut down.

(2) You must maintain the daily average water flow rate to a wet scrubber used to control monomer recovery process equipment at a minimum of 30 l/min.

(d) You must comply with the requirements of the New Source Performance Standard for Volatile Organic Liquids (40 CFR part 60, subpart Kb) for vessels that store acrylonitrile. The provisions in 40 CFR 60.114b do not apply to this subpart.

(e) You must operate continuous parameter monitoring systems (CPMS) to measure and record the water flow rate to a wet scrubber control device for the polymerization process equipment and the monomer recovery process equipment. The CPMS must record the water flow rate at least every 15 minutes and determine and record the daily average water flow rate.

(f) You must determine compliance with the daily average control device parameter operating limits for water flow rate in paragraph (c) of this section on a monthly basis and submit a summary report to EPA or the delegated authority on a quarterly basis. Should the daily average water flow rate to a wet scrubber control device for the polymerization process equipment fall below 50 l/min or the daily average water flow rate to a wet scrubber control device for the monomer recovery process equipment fall below 30 l/min, you must notify EPA or the delegated authority in writing within 10 days of the identification of the exceedance.

(g) You must keep records of each monthly compliance determination for the water flow rate operating parameter limits in a permanent form suitable for inspection and retain the records for at least 2 years following the date of each compliance determination.

(h) You must conduct a performance test for each control device for polymerization process equipment and monomer recovery process equipment subject to an emissions limit in paragraph (b) of this section within 180 days of your compliance date and report the results in your notification of compliance status. You must conduct each test according to the requirements in §63.7 of subpart A and §63.1104 of subpart YY. You are not required to conduct a performance test if a prior performance test was conducted using the methods specified in §63.1104 of subpart YY and either no process changes have been made since the test, or you can demonstrate that the results of the performance test, with or without adjustments, reliably demonstrate compliance despite process changes.

(i) If you do not use a wet scrubber control device for the polymerization process equipment or the monomer recovery process equipment, you must submit a monitoring plan to EPA or the delegated authority for approval. Each plan must contain the information in paragraphs (i)(1) through (5) of this section.

(1) A description of the device;

(2) Test results collected in accordance with §63.1104 of subpart YY verifying the performance of the device for reducing AN to the levels required by this subpart;

(3) Operation and maintenance plan for the control device (including a preventative maintenance schedule consistent with the manufacturer's instructions for routine and long-term maintenance) and continuous monitoring system.

(4) A list of operating parameters that will be monitored to maintain continuous compliance with the applicable emissions limits; and

(5) Operating parameter limits based on monitoring data collected during the performance test.

(j) If you do not operate a monomer recovery process that removes AN prior to spinning, you must comply with the requirements in paragraph (j)(1), (2), or (3) of this section for each fiber spinning line that uses a spin dope produced from either a suspension polymerization process or solution polymerization process.

(1) You must reduce the AN concentration of the spin dope to less than 100 parts per million by weight (ppmw); or

(2) You must design and operate a fiber spinning line enclosure according to the requirements in § 63.1103(b)(4) of subpart YY and reduce AN emissions by 85 weight-percent or more by venting emissions from the enclosure through a closed vent system to any combination of control devices meeting the requirements in § 63.982(a)(2) of subpart SS; or

(3) You must reduce AN emissions from the spinning line to less than or equal to 0.5 pounds of AN per ton (lb/ton) of acrylic and modacrylic fiber produced.

(k) You may change the operating limits for a wet scrubber if you meet the requirements in paragraphs (k)(1) through (3) of this section.

(1) Submit a written notification to the Administrator to conduct a new performance test to revise the operating limit.

(2) Conduct a performance test to demonstrate compliance with the applicable emissions limit for a control device in paragraph (b) of this section.

(3) Establish revised operating limits according to the procedures in paragraphs (k)(3)(i) and (ii) of this section.

(i) Using the CPMS required in paragraph (e) of this section, measure and record the water flow rate to the wet scrubber in intervals of no less than 15 minutes during each AN test run.

(ii) Determine and record the average water flow rate for each test run. Your operating limit is the lowest average flow rate during any test run that complies with the applicable emissions limit.

(l) You must treat process and maintenance wastewater containing AN in a wastewater treatment system. You must keep records that list each process and maintenance wastewater stream that contains AN and a process flow diagram of the wastewater treatment system that identifies each wastewater stream.

### § 63.11396 What are the standards and compliance requirements for new sources?

(a) You must comply with the requirements in paragraph (a)(1) or (2) of this section for each process vent where the AN concentration of the vent stream is equal to or greater than 50 parts per million by volume (ppmv) and the average flow rate is equal to or greater than 0.005 cubic meters per minute, as determined by the applicability and assessment procedures in § 63.1104 of subpart YY.

(1) You must reduce emissions of AN by 98 weight-percent or limit the concentration of AN in the emissions to no more than 20 ppmv, whichever is less stringent, by venting emissions through a closed vent system to any combination of control devices meeting the requirements for process vents in § 63.982(a)(2) of subpart SS; or

(2) You must reduce emissions of AN by using a flare that meets the requirements of § 63.987 of subpart SS.

(b) You must comply with the requirements in paragraph (b)(1), (2), or (3) of this section for each fiber spinning line that uses a spin dope produced from either a suspension polymerization process or solution polymerization process.

(1) You must reduce the AN concentration of the spin dope to less than 100 ppmw; or

(2) You must design and operate a fiber spinning line enclosure according to the requirements in § 63.1103(b)(4) of subpart YY and reduce AN emissions by 85 weight-percent or more by venting emissions from the enclosure through a closed vent system to any combination of control devices meeting the requirements in § 63.982(a)(2) of subpart SS; or

(3) You must reduce AN emissions from the spinning line to less than or equal to 0.5 pounds of AN per ton (lb/ton) of acrylic and modacrylic fiber produced.

(c) You must comply with the requirements for storage vessels holding acrylonitrile as shown in Table 2 to §63.1103(b)(3)(i) of subpart YY.

(d) You must comply with the requirements for equipment that contains or contacts 10 percent by weight or more of AN and operates 300 hours per year as shown in Table 2 to §63.1103(b)(3)(i) of subpart YY.

(e) You must comply with the requirements for process wastewater and maintenance wastewater from an acrylic and modacrylic fibers production process as shown in Table 2 to §63.1103(b)(3)(i) of subpart YY. Process wastewater and maintenance wastewater that contains AN and is not subject to the requirements in Table 2 to §63.1103(b)(3)(i) of subpart YY must be treated in a wastewater treatment system.

(f) You must comply with all testing, monitoring, recordkeeping, and reporting requirements in subpart SS (for process vents); subpart SS or WW (for AN tanks); subpart TT or UU (for equipment leaks); and subpart G (for process wastewater and maintenance wastewater). Only the provisions in §§63.132 through 63.148 and §§63.151 through 63.153 of subpart G apply to this subpart.

(g) If you use a control device other than a wet scrubber, flare, incinerator, boiler, process heater, absorber, condenser, or carbon adsorber, you must prepare and submit a monitoring plan to the Administrator for approval. Each plan must contain the information in paragraphs (g)(1) through (5) of this section.

(1) A description of the device;

(2) Test results collected in accordance with paragraph (f) of this section verifying the performance of the device for reducing AN to the levels required by this subpart;

(3) Operation and maintenance plan for the control device (including a preventative maintenance schedule consistent with the manufacturer's instructions for routine and long-term maintenance) and continuous monitoring system.

(4) A list of operating parameters that will be monitored to maintain continuous compliance with the applicable emissions limits; and

(5) Operating parameter limits based on monitoring data collected during the performance test.

OTHER REQUIREMENTS AND INFORMATION

### §63.11397 What General Provisions apply to this subpart?

(a) You must meet the requirements of the General Provisions in 40 CFR part 63, subpart A, as shown in Table 1 to this subpart.

(b) If you own or operate an existing affected source, your notification of compliance status required by §63.9(h) must include the following information:

(1) This certification of compliance, signed by a responsible official, for the standards in §63.11395(a): ''This facility complies with the management practices required in §63.11395(a) for operation of capture systems for polymerization process equipment and monomer recovery process equipment.''

(2) This certification of compliance, signed by a responsible official, for the emissions limits in §63.11395(b): ''This facility complies with the emissions limits in §63.11395(b)(1) and (2) for control devices serving the polymerization process equipment and monomer recovery process equipment based on previous performance tests in accordance with §63.11395(h)'' or ''This facility complies with the alternative standards for process vents in §63.11395(b)(3) based on previous performance tests and assessments in accordance with §63.11396(f)''. If you conduct a performance test or assessment to demonstrate compliance, you must include the results of the performance test and/or assessment.

(3) This certification of compliance, signed by a responsible official, for the standards for storage tanks in §63.11396(d): ''This facility complies with the requirements of 40 CFR part 60, subpart Kb for each tank that stores acrylonitrile.''

(4) This certification of compliance, signed by a responsible official, for the

requirement in Table 1 to subpart LLLLLL for preparation of a startup, shutdown, and malfunction plan: ''This facility has prepared a startup, shutdown, and malfunction plan in accordance with the requirements of 40 CFR 63.6(e)(3).''

(c) If you own or operate a new affected source, your notification of compliance status required by § 63.9(h) must include:

(1) The results of the initial performance test or compliance demonstration for each process vent (including closed vent system and control device, flare, or recovery device), fiber spinning line, AN storage tank, equipment, and wastewater stream subject to this subpart.

(2) This certification of compliance, signed by a responsible official, for the applicable emissions limit in § 63.11396(a) for process vents: ''This facility complies with the emissions limits in § 63.11396(a) for each process vent subject to control.''

(3) This certification of compliance, signed by a responsible official, for the applicable emissions limit in § 63.11396(b) for each fiber spinning line: ''This facility complies with the emissions limit and/or management practice requirements in § 63.11396(b)(1), (2), or (3) for each fiber spinning line.''

(4) This certification of compliance, signed by a responsible official, for the storage tank requirements in § 63.11396(c): ''This facility complies with the requirements for storage vessels holding acrylonitrile as shown in Table 2 to § 63.1103(b)(3)(i) of subpart YY.''

(5) This certification of compliance, signed by a responsible official, for the equipment leak requirements in § 63.11396(d): ''This facility complies with the requirements for all equipment that contains or contacts 10 percent by weight or more of AN and operates 300 hours per year or more as shown in Table 2 to § 63.1103(b)(3)(i) of subpart YY.''

(6) This certification of compliance, signed by a responsible official, for the process wastewater and maintenance wastewater requirements in § 63.11396(e): ''This facility complies with the requirements in Table 2 to § 63.1103(b)(3)(i) of subpart YY for each process wastewater stream and each maintenance wastewater stream.''

(d) If you own or operate a new affected source, you must report any deviation from the requirements of this subpart in the semiannual report required by 40 CFR 63.10(e)(3).

### § 63.11398 What definitions apply to this subpart?

*Acrylic fiber* means a manufactured synthetic fiber in which the fiber-forming substance is any long-chain synthetic polymer composed of at least 85 percent by weight of acrylonitrile units.

*Acrylic and modacrylic fibers production* means the production of either of the following synthetic fibers composed of acrylonitrile units: acrylic fiber or modacrylic fiber.

*Acrylonitrile solution polymerization* means a process where acrylonitrile and comonomers are dissolved in a solvent to form a polymer solution (typically polyacrylonitrile). The polyacrylonitrile is soluble in the solvent. In contrast to suspension polymerization, the resulting reactor polymer solution (spin dope) is filtered and pumped directly to the fiber spinning process.

*Acrylonitrile suspension polymerization* means a polymerization process where small drops of acrylonitrile and comonomers are suspended in water in the presence of a catalyst where they polymerize under agitation. Solid beads of polymer are formed in this suspension reaction which are subsequently filtered, washed, refiltered, and dried. The beads must be subsequently redissolved in a solvent to create a spin dope prior to introduction to the fiber spinning process.

*Deviation* means any instance in which an affected source subject to this subpart, or an owner or operator of such a source:

(1) Fails to meet any requirement or obligation established by this subpart, including but not limited to any emissions limitation or management practice;

(2) Fails to meet any term or condition that is adopted to implement an applicable requirement in this subpart and that is included in the operating

permit for any affected source required to obtain such a permit; or

(3) Fails to meet any emissions limitation or management practice in this subpart during startup, shutdown, or malfunction, regardless of whether or not such failure is permitted by this subpart.

*Equipment* means each of the following that is subject to this subpart: pump, compressor, agitator, pressure relief device, sampling collection system, open-ended valve or line, valve connector, instrumentation system in organic HAP service which contains or contacts greater than 10 percent by weight of acrylonitrile and operates more than 300 hours per year.

*Fiber spinning line* means the group of equipment and process vents associated with acrylic or modacrylic fiber spinning operations. The fiber spinning line includes (as applicable to the type of spinning process used) the blending and dissolving tanks, spinning solution filters, wet spinning units, spin bath tanks, and the equipment used downstream of the spin bath to wash, dry, or draw the spun fiber.

*Maintenance wastewater* means wastewater generated by the draining of process fluid from components in the process unit, whose primary product is a product produced by a source category subject to this subpart, into an individual drain system prior to or during maintenance activities. Maintenance wastewater can be generated during planned and unplanned shutdowns and during periods not associated with a shutdown. Examples of activities that can generate maintenance wastewaters include descaling of heat exchanger tubing bundles, cleaning of distillation column traps, draining of low legs and high point bleeds, draining of pumps into an individual drain system, and draining of portions of the process unit, whose primary product is a product produced by a source category subject to this subpart, for repair.

*Modacrylic fiber* means a manufactured synthetic fiber in which the fiber-forming substance is any long-chain synthetic polymer composed of at least 35 percent by weight of acrylonitrile units but less than 85 percent by weight of acrylonitrile units.

*Monomer recovery process equipment* means the collection of process units and associated process equipment used to reclaim the monomer for subsequent reuse, including but not limited to polymer holding tanks, polymer buffer tanks, monomer vacuum pump flush drum, and drum filter vacuum pump flush drum.

*Polymerization process equipment* means the collection of process units and associated process equipment used in the acrylonitrile polymerization process prior to the fiber spinning line, including but not limited to acrylonitrile storage tanks, recovered monomer tanks, monomer measuring tanks, monomer preparation tanks, monomer feed tanks, slurry receiver tanks, polymerization reactors, and drum filters.

*Process vent* means the point of discharge to the atmosphere (or point of entry into a control device, if any) of a gas stream from the acrylic and modacrylic fibers production process.

*Process wastewater* means wastewater, which during manufacturing or processing, comes into direct contact with or results from the production or use of any raw material, intermediate product, finished product, by-product, or waste product.

*Responsible official* means responsible official as defined at 40 CFR 70.2.

*Spin dope* means the liquid mixture of polymer and solvent that is fed to the spinneret to form the acrylic and modacrylic fibers.

### §63.11399 Who implements and enforces this subpart?

(a) This subpart can be implemented and enforced by the U.S. EPA or a delegated authority such as a State, local, or tribal agency. If the U.S. EPA Administrator has delegated authority to a State, local, or Tribal agency pursuant to 40 CFR part 63, subpart E, then that Agency has the authority to implement and enforce this subpart. You should contact your U.S. EPA Regional Office to find out if this subpart is delegated to a State, local, or tribal agency within your State.

(b) In delegating implementation and enforcement authority of this subpart to a State, local, or tribal agency under 40 CFR part 63, subpart E, the

approval authorities contained in paragraphs (b)(1) through (4) of this section are retained by the Administrator of the U.S. EPA and are not transferred to the State, local, or tribal agency.

(1) Approval of an alternative non-opacity emissions standard under §63.6(g).

(2) Approval of a major change to a test method under §63.7(e)(2)(ii) and (f). A ''major change to test method'' is defined in §63.90.

(3) Approval of a major change to monitoring under §63.8(f). A ''major change to monitoring'' is defined in §63.90.

(4) Approval of a major change to recordkeeping/ reporting under §63.10(f). A ''major change to recordkeeping/reporting'' is defined in §63.90.

As required in §63.11397(a), you must comply with the requirements of the NESHAP General Provisions (40 CFR part 63, subpart A) as shown in the following table.

[72 FR 38899, July 16, 2007, as amended at 73 FR 15928, Mar. 26, 2008]

TABLE 1 TO SUBPART LLLLLL OF PART 63—APPLICABILITY OF GENERAL PROVISIONS TO SUBPART LLLLLL

| Citation | Subject | Applies to subpart LLLLLL? | Explanation |
|---|---|---|---|
| 63.1(a)(1), (a)(2), (a)(3), (a)(4), (a)(6), (a)(10)–(a)(12) (b)(1), (b)(3), (c)(1), (c)(2), (c)(5), (e). | Applicability | Yes. | |
| 63.1(a)(5), (a)(7)–(a)(9), (b)(2), (c)(3), (c)(4), (d). | Reserved | No. | |
| 63.2 | Definitions | Yes. | |
| 63.3 | Units and Abbreviations | Yes. | |
| 63.4 | Prohibited Activities and Circumvention. | Yes. | |
| 63.5 | Preconstruction Review and Notification Requirements. | No. | |
| 63.6(a), (b)(1)–(b)(5), (b)(7), (c)(1), (c)(2), (c)(5), (e)(1), (e)(3)(i), (e)(3)(iii)–(e)(3)(ix), (f) (g), (i), (j). | Compliance with Standards and Maintenance Requirements. | Yes | Subpart LLLLLL requires new and existing sources to comply with requirements for startups, shutdowns, and malfunctions in §63.6(e)(3). |
| 63.6(b)(6), (c)(3), (c)(4), (d), (e)(2), (e)(3)(ii), (h)(3), (h)(5)(iv). | Reserved | No. | |
| 63.6(h)(1)–(h)(4), (h)(5)(i)–(h)(5)(iii), (h)(6)–(h)(9). | | No | Subpart LLLLLL does not include opacity or visible emissions standards or require a continuous opacity monitoring system. |
| 63.7(a), (e), (f), (g), (h) | Performance Testing Requirements. | Yes/No | Subpart LLLLLL requires performance tests for new and existing sources; a test for an existing source is not required if a prior test meets the conditions in §63.11395(h). |
| 63.7(b), (c) | | Yes/No | Requirements for notification of performance test and for quality assurance program apply to new sources but not existing sources. |
| 63.8(a)(1), (a)(2), (b), (c)(1)–(c)(3), (f)(1)–(5). | Monitoring Requirements | Yes. | |
| 63.8(a)(3) | Reserved | No. | |
| 63.8(a)(4) | | Yes | Requirements apply to new sources if flares are the selected control option. |
| 63.8(c)(4)–(c)(8), (d), (e), (f)(6), (g). | | Yes | Requirements apply to new sources but not to existing sources. |
| 63.9(a), (b)(1), (b)(5), (c), (d), (i), (j). | Notification Requirements | Yes. | |
| 63.9(e) | | Yes/No | Notification of performance test is required for new area sources. |
| 63.9(b)(2) | | Yes | Initial notification of applicability is required for new and existing area sources. |
| 63.9(b)(3), (h)(4) | Reserved | No. | |
| 63.9(b)(4), (h)(5) | | No. | |

| Citation | Subject | Applies to subpart LLLLLL? | Explanation |
|---|---|---|---|
| 63.9(f), (g) | | No | Subpart LLLLLL does not require a continuous opacity monitoring system or continuous emissions monitoring system. |
| 63.9(h)(1)–(h)(3), (h)(6) | | Yes | Notification of compliance status is required for new and existing area sources. |
| 63.10(a) | Recordkeeping Requirements. | Yes. | |
| 63.10(b)(1) | | Yes/No | Record retention requirement applies to new area sources but not existing area sources. Subpart LLLLLL establishes 2-year retention period for existing area sources. |
| 63.10(b)(2) | | Yes | Recordkeeping requirements for startups, shutdowns, and malfunctions apply to new and existing area sources. |
| 63.10(b)(3) | | Yes | Recordkeeping requirements for applicability determinations apply to new area sources. |
| 63.10(c)(1), (c)(5)–(c)(14) | | Yes/No | Recordkeeping requirements for continuous parameter monitoring systems apply to new sources but not existing sources. |
| 63.10(c)(2)–(c)(4), (c)(9) | Reserved | No. | |
| 63.10(d)(1), (d)(4), (e)(1), (e)(2), (f). | Reporting Requirements | Yes. | |
| 63.10(d)(2) | | Yes | Report of performance test results applies to each area source required to conduct a performance test. |
| 63.10(d)(3) | | No | Subpart LLLLLL does not include opacity or visible emissions limits. |
| 63.10(d)(5) | | Yes | Requirements for startup, shutdown, and malfunction reports apply to new and existing area sources. |
| (e)(1)–(e)(2), (e)(4) | | No | Subpart LLLLLL does not require a continuous emissions monitoring system or continuous opacity monitoring system. |
| 63.10(e)(3) | | Yes/No | Semiannual reporting requirements for excess emissions and parameter monitoring exceedances apply to new area sources but not existing area sources. |
| 63.11 | Control Device Requirements. | Yes | Requirements apply to new sources if flares are the selected control option. |
| 63.12 | State Authorities and Delegations. | Yes. | |
| 63.13 | Addresses | Yes. | |
| 63.14 | Incorporations by Reference | Yes. | |
| 63.15 | Availability of Information and Confidentiality. | Yes. | |
| 63.16 | Performance Track Provisions.. | Yes. | |

## Subpart MMMMMM—National Emission Standards for Hazardous Air Pollutants for Carbon Black Production Area Sources

SOURCE: 72 FR 38904, July 16, 2007, unless otherwise noted.

APPLICABILITY AND COMPLIANCE DATES

### § 63.11400 Am I subject to this subpart?

(a) You are subject to this subpart if you own or operate a carbon black production facility that is an area source of hazardous air pollutant (HAP) emissions.

(b) This subpart applies to each new or existing affected source. The affected source is each carbon black production process unit. The affected source includes all waste management

units, maintenance wastewater, and equipment components that contain or contact HAP that are associated with the carbon black production process unit.

(1) An affected source is an existing source if you commenced construction or reconstruction of the affected source on or before April 4, 2007.

(2) An affected source is new if you commenced construction or reconstruction of the affected source after April 4, 2007.

(c) This subpart does not apply to research and development facilities, as defined in section 112(c)(7) of the Clean Air Act (CAA).

(d) If you own or operate an area source subject to this subpart, you must obtain a permit under 40 CFR part 70 or 40 CFR part 71.

### § 63.11401 What are my compliance dates?

(a) If you own or operate an existing affected source, you must achieve compliance with the applicable provisions of this subpart by July 16, 2007.

(b) If you startup a new affected source on or before July 16, 2007, you must achieve compliance with the applicable provisions of this subpart not later than July 16, 2007.

(c) If you startup a new affected source after July 16, 2007, you must achieve compliance with the applicable provisions of this subpart upon startup of your affected source.

STANDARDS AND COMPLIANCE REQUIREMENTS

### § 63.11402 What are the standards and compliance requirements for new and existing sources?

You must meet all the requirements in § 63.1103(f) of subpart YY.

### § 63.11403 [Reserved]

OTHER REQUIREMENTS AND INFORMATION

### § 63.11404 What General Provisions apply to this subpart?

The provisions in 40 CFR part 63, subpart A, applicable to this subpart are §§ 63.1 through 63.5 and §§ 63.11 through 63.16.

### § 63.11405 What definitions apply to this subpart?

The terms used in this subpart are defined in §§ 63.1101 and 63.1103(f)(2).

### § 63.11406 Who implements and enforces this subpart?

(a) This subpart can be implemented and enforced by the U.S. EPA or a delegated authority such as a State, local, or tribal agency. If the U.S. EPA Administrator has delegated authority to a State, local, or tribal agency pursuant to 40 CFR part 63, subpart E, then that Agency has the authority to implement and enforce this subpart. You should contact your U.S. EPA Regional Office to find out if this subpart is delegated to a State, local, or tribal agency within your State.

(b) In delegating implementation and enforcement authority of this subpart to a State, local, or tribal agency under 40 CFR part 63, subpart E, the approval authorities contained in paragraphs (b)(1) through (4) of this section are retained by the Administrator of the U.S. EPA and are not transferred to the State, local, or tribal agency.

(1) Approval of an alternative non-opacity emissions standard under § 63.992(b)(1).

(2) Approval of a major change to test methods under § 63.7(e)(2)(ii) and (f). A ''major change to test method'' is defined in § 63.90.

(3) Approval of a major change to monitoring under § 63.8(f). A ''major change to monitoring'' is defined in § 63.90.

(4) Approval of a major change to recordkeeping/reporting under § 63.10(f). A ''major change to recordkeeping/reporting'' is defined in § 63.90.

[72 FR 38904, July 16, 2007, as amended at 73 FR 15928, Mar. 26, 2008]

## Subpart NNNNNN—National Emission Standards for Hazardous Air Pollutants for Chemical Manufacturing Area Sources: Chromium Compounds

SOURCE: 72 FR 38905, July 16, 2007, unless otherwise noted.

APPLICABILITY AND COMPLIANCE DATES

### §63.11407 Am I subject to this subpart?

(a) You are subject to this subpart if you own or operate a chromium compounds manufacturing facility that is an area source of hazardous air pollutant (HAP) emissions.

(b) This subpart applies to each new or existing affected source. The affected source is each chromium compounds manufacturing facility.

(1) An affected source is existing if you commenced construction or reconstruction of the affected source on or before April 4, 2007.

(2) An affected source is new if you commence construction or reconstruction of the affected source after April 4, 2007.

(c) This subpart does not apply to research and development facilities, as defined in section 112(c)(7) of the CAA.

(d) If you own or operate an area source subject to this subpart, you must obtain a permit under 40 CFR part 70 or 40 CFR part 71.

### §63.11408 What are my compliance dates?

(a) If you own or operate an existing affected source, you must achieve compliance with the applicable provisions in this subpart not later than January 16, 2008.

(b) If you startup a new affected source on or before July 16, 2007, you must achieve compliance with the applicable provisions of this subpart not later than July 16, 2007.

(c) If you startup a new affected source after July 16, 2007, you must achieve compliance with the applicable provisions of this subpart upon startup of your affected source.

STANDARDS AND COMPLIANCE REQUIREMENTS

### §63.11409 What are the standards?

(a) You must operate a capture system that collects the gases and fumes released during the operation of each emissions source listed in Table 1 of this subpart and conveys the collected gas stream to a particulate matter (PM) control device.

(b) You must not discharge to the atmosphere through any combination of stacks or other vents process gases from an emissions source listed in Table 1 of this subpart that contain PM in excess of the allowable process rate determined according to Equation 1 of this section (for an emissions source with a process rate of less than 30 tons per hour) or Equation 2 of this section (for an emissions source with a process rate of 30 tons per hour or greater). If more than one process vents to a common stack, the applicable emissions limit for the stack is the sum of allowable emissions calculated for each process using Equation 1 or 2 of this section, as applicable.

$$E = 4.1 \times P^{0.67} \qquad \text{(Eq. 1)}$$

Where:

E = Emissions limit in pounds per hour (lb/hr); and

P = Process rate of emissions source in tons per hour (ton/hr).

$$E = 55 \times P^{0.11} - 40 \qquad \text{(Eq. 2)}$$

### §63.11410 What are the compliance requirements?

(a) *Existing sources.* If you own or operate an existing area source, you must comply with the requirements in paragraphs (b) through (e) of this section.

(b) *Initial control device inspection.* You must conduct an initial inspection of each PM control device according to the requirements in paragraphs (b)(1) through (4) of this section. You must conduct each inspection no later than 60 days after your applicable compliance date for each installed control device which has been operated within 60 days of the compliance date. For an installed control device which has not been operated within 60 days of the compliance date, you must conduct an initial inspection prior to startup of the control device.

(1) For each baghouse, you must visually inspect the system ductwork and baghouse unit for leaks. You must also inspect the inside of each baghouse for structural integrity and fabric filter condition. You must record the results of the inspection and any maintenance

action in the logbook required in paragraph (d) of this section. An initial inspection of the internal components of a baghouse is not required if an inspection has been performed within the past 12 months.

(2) For each dry electrostatic precipitator, you must verify the proper functioning of the electronic controls for corona power and rapper operation, that the corona wires are energized, and that adequate air pressure is present on the rapper manifold. You must also visually inspect the system ductwork and electrostatic precipitator housing unit and hopper for leaks and inspect the interior of the electrostatic precipitator to determine the condition and integrity of corona wires, collection plates, hopper, and air diffuser plates. An initial inspection of the internal components of a dry electrostatic precipitator is not required if an inspection has been performed within the past 24 months.

(3) For each wet electrostatic precipitator, you must verify the proper functioning of the electronic controls for corona power, that the corona wires are energized, and that water flow is present. You must also visually inspect the system ductwork and electrostatic precipitator housing unit and hopper for leaks and inspect the interior of the electrostatic precipitator to determine the condition and integrity of corona wires, collection plates, plate wash spray heads, hopper, and air diffuser plates. An initial inspection of the internal components of a wet electrostatic precipitator is not required if an inspection has been performed within the past 24 months.

(4) For each wet scrubber, you must verify the presence of water flow to the scrubber. You must also visually inspect the system ductwork and scrubber unit for leaks and inspect the interior of the scrubber for structural integrity and the condition of the demister and spray nozzle.

(i) An initial inspection of the internal components of a wet scrubber is not required if an inspection has been performed within the past 12 months.

(ii) The requirement in paragraph (b)(4) of this section for initial inspection of the internal components of a wet scrubber does not apply to a cyclonic scrubber installed upstream of a wet or dry electrostatic precipitator.

(c) *Periodic inspections/maintenance.* Following the initial inspections, you must perform periodic inspections and maintenance of each PM control device according to the requirements in paragraphs (c)(1) through (4) of this section.

(1) You must inspect and maintain each baghouse according to the requirements in paragraphs (c)(1)(i) and (ii) of this section.

(i) You must conduct monthly visual inspections of the system ductwork for leaks.

(ii) You must conduct inspections of the interior of the baghouse for structural integrity and to determine the condition of the fabric filter every 12 months. If an initial inspection is not required by paragraph (b)(1) of this section, the first inspection must not be more than 12 months from the last inspection.

(2) You must inspect and maintain each dry electrostatic precipitator according to the requirements in paragraphs (c)(2)(i) through (iii) of this section.

(i) You must conduct a daily inspection to verify the proper functioning of the electronic controls for corona power and rapper operation, that the corona wires are energized, and that adequate air pressure is present on the rapper manifold.

(ii) You must conduct monthly visual inspections of the system ductwork, housing unit, and hopper for leaks.

(iii) You must conduct inspections of the interior of the electrostatic precipitator to determine the condition and integrity of corona wires, collection plates, plate rappers, hopper, and air diffuser plates every 24 months.

(3) You must inspect and maintain each wet electrostatic precipitator according to the requirements in paragraphs (c)(3)(i) through (iii) of this section.

(i) You must conduct a daily inspection to verify the proper functioning of the electronic controls for corona power, that the corona wires are energized, and that water flow is present.

(ii) You must conduct monthly visual inspections of the system ductwork, electrostatic precipitator housing unit, and hopper for leaks.

(iii) You must conduct inspections of the interior of the electrostatic precipitator to determine the condition and integrity of corona wires, collection plates, plate wash spray heads, hopper, and air diffuser plates every 24 months. If an initial inspection is not required by paragraph (b)(3) of this section, the first inspection must not be more than 24 months from the last inspection.

(4) You must inspect and maintain each wet scrubber according to the requirements in paragraphs (c)(4)(i) through (iii) of this section.

(i) You must conduct a daily inspection to verify the presence of water flow to the scrubber.

(ii) You must conduct monthly visual inspections of the system ductwork and scrubber unit for leaks.

(iii) You must conduct inspections of the interior of the scrubber to determine the structural integrity and condition of the demister and spray nozzle every 12 months. Internal inspections of cyclonic scrubbers installed upstream of wet or dry electrostatic precipitators are not required.

(d) *Recordkeeping requirements.* You must record the results of each inspection and maintenance action in a logbook (written or electronic format). You must keep the logbook onsite and make the logbook available to the permitting authority upon request. You must keep records of the information specified in paragraphs (d)(1) through (4) of this section for 5 years following the date of each recorded action.

(1) The date and time of each recorded action for a fabric filter, the results of each inspection, and the results of any maintenance performed on the bag filters.

(2) The date and time of each recorded action for a wet or dry electrostatic precipitator (including ductwork), the results of each inspection, and the results of any maintenance performed on the electrostatic precipitator.

(3) The date and time of each recorded action for a wet scrubber (including ductwork), the results of each inspection, and the results of any maintenance performed on the wet scrubber.

(4) Records of all required monitoring data and supporting information including all calibration and maintenance records, original strip-chart recordings for continuous monitoring information, and copies of all reports required by this subpart. You must maintain records of required monitoring data in a form suitable and readily available for expeditious review. All records must be kept onsite and made available to EPA or the delegated authority for inspection upon request. You must maintain records of all required monitoring data and supporting information for at least 5 years from the date of the monitoring sample, measurement, report, or application.

(e) *Reports.* (1) You must report each deviation (an action or condition not in accordance with the requirements of this subpart, including upset conditions but excluding excess emissions) to the permitting agency on the next business day after becoming aware of the deviation. You must submit a written report within 2 business days which identifies the probable cause of the deviation and any corrective actions or preventative actions taken. All reports of deviations must be certified by a responsible official.

(2) You must submit semiannual reports of monitoring and recordkeeping activities to your permitting authority.

(3) You must submit the results of any maintenance performed on each PM control device within 30 days of a written request by the permitting authority.

(f) *New sources.* If you own or operate a new affected source, you must comply with the requirements in paragraphs (g) and (h) of this section.

(g) *Bag leak detection systems.* You must install, operate, and maintain a bag leak detection system on all baghouses used to comply with the PM emissions limit in §63.11409 according to paragraph (g)(1) of this section; prepare and operate by a site-specific monitoring plan according to paragraph (g)(2) of this section; take corrective action according to paragraph (g)(3) of this section; and record information according to paragraph (g)(4) of this section.

(1) Each bag leak detection system must meet the specifications and requirements in paragraphs (g)(1)(i) through (viii) of this section.

(i) The bag leak detection system must be certified by the manufacturer to be capable of detecting PM emissions at concentrations of 0.00044 grains per actual cubic foot or less.

(ii) The bag leak detection system sensor must provide output of relative PM loadings. The owner or operator shall continuously record the output from the bag leak detection system using electronic or other means (e.g., using a strip chart recorder or a data logger).

(iii) The bag leak detection system must be equipped with an alarm system that will sound when the system detects an increase in relative particulate loading over the alarm set point established according to paragraph (g)(1)(iv) of this section, and the alarm must be located such that it can be heard by the appropriate plant personnel.

(iv) In the initial adjustment of the bag leak detection system, you must establish, at a minimum, the baseline output by adjusting the sensitivity (range) and the averaging period of the device, the alarm set points, and the alarm delay time.

(v) Following initial adjustment, you shall not adjust the averaging period, alarm set point, or alarm delay time without approval from the Administrator or delegated authority except as provided in paragraph (g)(1)(vi) of this section.

(vi) Once per quarter, you may adjust the sensitivity of the bag leak detection system to account for seasonal effects, including temperature and humidity, according to the procedures identified in the site-specific monitoring plan required by paragraph (g)(2) of this section.

(vii) You must install the bag leak detection sensor downstream of the baghouse and upstream of any wet scrubber.

(viii) Where multiple detectors are required, the system's instrumentation and alarm may be shared among detectors.

(2) You must develop and submit to the Administrator or delegated authority for approval a site-specific monitoring plan for each bag leak detection system. You must operate and maintain the bag leak detection system according to an approved site-specific monitoring plan at all times. Each monitoring plan must describe the items in paragraphs (g)(2)(i) through (vi) of this section.

(i) Installation of the bag leak detection system;

(ii) Initial and periodic adjustment of the bag leak detection system, including how the alarm set-point will be established;

(iii) Operation of the bag leak detection system, including quality assurance procedures;

(iv) How the bag leak detection system will be maintained, including a routine maintenance schedule and spare parts inventory list;

(v) How the bag leak detection system output will be recorded and stored; and

(vi) Corrective action procedures as specified in paragraph (g)(3) of this section. In approving the site-specific monitoring plan, the Administrator or delegated authority may allow owners and operators more than 3 hours to alleviate a specific condition that causes an alarm if the owner or operator identifies in the monitoring plan this specific condition as one that could lead to an alarm, adequately explains why it is not feasible to alleviate this condition within 3 hours of the time the alarm occurs, and demonstrates that the requested time will ensure alleviation of this condition as expeditiously as practicable.

(3) For each bag leak detection system, you must initiate procedures to determine the cause of every alarm within 1 hour of the alarm. Except as provided in paragraph (g)(2)(vi) of this section, you must alleviate the cause of the alarm within 3 hours of the alarm by taking whatever corrective action(s) are necessary. Corrective actions may include, but are not limited to the following:

(i) Inspecting the baghouse for air leaks, torn or broken bags or filter media, or any other condition that may cause an increase in particulate emissions;

(ii) Sealing off defective bags or filter media;

(iii) Replacing defective bags or filter media or otherwise repairing the control device;

(iv) Sealing off a defective baghouse compartment;

(v) Cleaning the bag leak detection system probe or otherwise repairing the bag leak detection system; or

(vi) Shutting down the process producing the particulate emissions.

(4) You must maintain records of the information specified in paragraphs (g)(4)(i) through (iii) of this section for each bag leak detection system.

(i) Records of the bag leak detection system output;

(ii) Records of bag leak detection system adjustments, including the date and time of the adjustment, the initial bag leak detection system settings, and the final bag leak detection system settings; and

(iii) The date and time of all bag leak detection system alarms, the time that procedures to determine the cause of the alarm were initiated, the cause of the alarm, an explanation of the actions taken, the date and time the cause of the alarm was alleviated, and whether the alarm was alleviated within 3 hours of the alarm.

(h) *Other control devices*. If you use a control device other than a baghouse, you must prepare and submit a monitoring plan to EPA or the delegated authority for approval. You must operate and maintain the control device according to an approved site-specific monitoring plan at all times. Each plan must contain the information in paragraphs (h)(1) through (5) of this section.

(1) A description of the device;

(2) Test results collected in accordance with paragraph (i) of this section verifying the performance of the device for reducing PM to the levels required by this subpart;

(3) Operation and maintenance plan for the control device (including a preventative maintenance schedule consistent with the manufacturer's instructions for routine and long-term maintenance) and continuous monitoring system.

(4) A list of operating parameters that will be monitored to maintain continuous compliance with the applicable emissions limits; and

(5) Operating parameter limits based on monitoring data collected during the performance test.

(i) *Performance tests*. If you own or operate a new affected source, you must conduct a performance test for each emissions source subject to an emissions limit in §63.11409(b) within 180 days of your compliance date and report the results in your notification of compliance status. If you own or operate an existing affected source, you are not required to conduct a performance test if a prior performance test was conducted within the past 5 years of the effective date using the same methods specified in paragraph (j) of this section and either no process changes have been made since the test, or if you can demonstrate that the results of the performance test, with or without adjustments, reliably demonstrate compliance despite process changes.

(j) *Test methods*. You must conduct each performance test according to the requirements in §63.7 and paragraphs (j)(1) through (3) of this section.

(1) Determine the concentration of PM according to the following test methods in 40 CFR part 60, appendix A:

(i) Method 1 or 1A to select sampling port locations and the number of traverse points in each stack or duct. Sampling sites must be located at the outlet of the control device and prior to any releases to the atmosphere.

(ii) Method 2, 2A, 2C, 2D, 2F, or 2G to determine the volumetric flow rate of the stack gas.

(iii) Method 3, 3A, or 3B to determine the dry molecular weight of the stack gas. You may use ANSI/ASME PTC 19.10–1981, ''Flue and Exhaust Gas Analyses (incorporated by reference—see §63.14) as an alternative to EPA Method 3B.

(iv) Method 4 to determine the moisture content of the stack gas.

(v) Method 5 or 5D to determine the concentration of particulate matter (front half filterable catch only). Three valid test runs are needed to comprise a performance test.

(2) During the test, you must operate each emissions source within ±10 percent of the normal process rate specified in your notification of compliance

status. You must monitor and record the process rate during the test.

(3) Compute the mass emissions (E) in pounds per hour (lb/hr) for each test run using Equation 1 of this section and the process rate measured during the test. The PM emissions in lb/hr must be less than the allowable PM emissions rate for the emissions source.

$$E = \frac{C \times Q}{K} \qquad \text{(Eq. 1)}$$

Where:

E = Mass emissions of PM, pounds per hour (lb/hr);

C = Concentration of PM, grains per dry standard cubic foot (gr/dscf);

Q = Volumetric flow rate of stack gas, dry standard cubic foot per hour (dscf/hr); and

K = Conversion factor, 7,000 grains per pound (gr/lb).

(k) *Startups, shutdown, and malfunctions.* The requirements in paragraphs (k)(1) and (2) of this section apply to the owner or operator of a new or existing affected source.

(1) Except as provided in paragraph (k)(2) of this section, you must report emissions in excess of a PM emissions limit established by this subpart lasting for more than 4 hours that result from a malfunction, a breakdown of process or control equipment, or any other abnormal condition by 9 a.m. of the next business day of becoming aware of the occurrence. You must provide the name and location of the facility, the nature and cause of the malfunction or breakdown, the time when the malfunction or breakdown is first observed, the expected duration, and the estimated rate of emissions. You must also notify EPA or the delegated authority immediately when corrected measures have been accomplished and, if requested, submit a written report within 15 days after the request.

(2) As an alternative to the requirements in paragraph (k)(1) of this section, you must comply with the startup, shutdown, and malfunction requirements in § 63.6(e)(3).

[72 FR 38905, July 16, 2007, as amended at 73 FR 15928, Mar. 26, 2008]

OTHER REQUIREMENTS AND INFORMATION

### § 63.11411 What General Provisions apply to this subpart?

(a) You must comply with the requirements of the General Provisions in 40 CFR part 63, subpart A as specified in Table 2 to this subpart.

(b) Your notification of compliance status required by § 63.9(h) must include the following information for a new or existing affected source:

(1) This certification of compliance, signed by a responsible official, for the standards in § 63.11409(a): ''This facility complies with the management practice requirements in § 63.11409(a) for installation and operation of capture systems for each emissions source subject to an emissions limit in § 63.11409(b).''

(2) This certification of compliance by the owner or operator of an existing source (if applicable), signed by a responsible official, for the emissions limits in § 63.11409(b): ''This facility complies with the emissions limits in § 63.11409(b) based on a previous performance test in accordance with § 63.11410(i).''

(3) The process rate for each emissions source subject to an emissions limit in § 63.11409(b) that represents normal and representative production operations.

(4) The procedures used to measure and record the process rate for each emissions source subject to an emissions limit in § 63.11409(b).

(5) This certification of compliance by the owner or operator of an existing affected source, signed by a responsible official, for the control device inspection and maintenance requirements in § 63.11410(b) through (d): ''This facility has conducted an initial inspection of each control device according to the requirements in § 63.11410(b), will conduct periodic inspections and maintenance of control devices in accordance with § 63.11410(c), and will maintain records of each inspection and maintenance action in the logbook required by § 63.11410(d).''

(6) This certification of compliance by the owner or operator of a new affected source, signed by a responsible official, for the bag leak detection system monitoring plan requirement in

§63.11410(g)(2): ''This facility has an approved bag leak detection system monitoring plan in accordance with §63.11410(g)(2).''

(7) Performance test results for each emissions unit at a new affected source (or each emissions source at an existing affected source if a test is required) in accordance with §63.11410(j). The performance test results for a new affected source must identify the daily average parameter operating limit for each PM control device.

(8) If applicable, this certification of compliance by the owner or operator of a new or existing source, signed by a responsible official, for the requirement in paragraph (k)(2) of this section to comply with the startup, shutdown, and malfunction provisions in 40 CFR 63.6(e)(3): ''This facility has prepared a startup, shutdown, and malfunction plan in accordance with 40 CFR 63.6(e)(3)''.

### §63.11412 What definitions apply to this subpart?

Terms used in this subpart are defined in the CAA, in 40 CFR 63.2, and in this section as follows:

*Bag leak detection system* means a system that is capable of continuously monitoring relative particulate matter (dust loadings) in the exhaust of a baghouse to detect bag leaks and other upset conditions. A bag leak detection system includes, but is not limited to, an instrument that operates on triboelectric, light scattering, light transmittance, or other effect to continuously monitor relative particulate matter loadings.

*Chromic acid* means chromium trioxide ($CrO_3$). It is produced by the electrolytic reaction or acidification of sodium dichromate.

*Chromium compounds manufacturing* means any process that uses chromite ore as the basic feedstock to manufacture chromium compounds, primarily sodium dichromate, chromic acid, and chromic oxide.

*Chromium compounds manufacturing facility* means the collection of processes and equipment at a plant engaged in chromium compounds manufacturing.

*Chromite ore* means an oxide of chromium and iron ($FeCr_2O_4$) that is the primary feedstock for chromium compounds manufacturing.

*Chromic oxide* means $Cr_2O_3$. In the production of chromic oxide, ammonium sulfate and sodium dichromate that have been concentrated by evaporation are mixed and fed to a rotary roasting kiln to produce chromic oxide, sodium sulfate and nitrogen gas.

*Roasting* means a heating (oxidizing) process where ground chromite ore is mixed with alkaline material (such as soda ash, sodium bicarbonate, and sodium hydroxide) and fed to a rotary kiln where it is heated to about 2,000 F, converting the majority of the chromium in the ore from trivalent to hexavalent chromium.

*Sodium chromate* means $Na_2CrO_4$. It is produced by roasting chromite ore in a rotary kiln.

*Sodium dichromate* means sodium bichromate or sodium bichromate dihydrate and is known technically as sodium dichromate dihydrate ($Na_2Cr_2O_7 \bullet 2H_2O$). It is produced by the electrolytic reaction or acidification of sodium chromate.

### §63.11413 Who implements and enforces this subpart?

(a) This subpart can be implemented and enforced by the U.S. EPA, or a delegated authority such as a State, local, or tribal agency. If the U.S. EPA Administrator has delegated authority to a State, local, or tribal agency pursuant to 40 CFR part 63, subpart E, then that Agency has the authority to implement and enforce this subpart. You should contact your U.S. EPA Regional Office to find out if this subpart is delegated to a State, local, or tribal agency.

(b) In delegating implementation and enforcement authority of this subpart to a State, local, or tribal agency under 40 CFR part 63, subpart E, the authorities contained in paragraphs (b)(1) through (4) of this section are retained by the Administrator of the U.S. EPA and are not transferred to the State, local, or tribal agency.

(1) Approval of an alternative nonopacity emissions standard under §63.6(g).

(2) Approval of a major change to test methods under §63.7(e)(2)(ii) and

(f). A ''major change to test method'' is defined in § 63.90.

(3) Approval of a major change to monitoring under § 63.8(f). A ''major change to monitoring'' is defined in § 63.90.

(4) Approval of a major change to recordkeeping/reporting under § 63.10(f). A ''major change to recordkeeping/reporting'' is defined in § 63.90.

As required in § 63.11409, you must install and operate capture systems and comply with the applicable emissions limit for each emissions source shown in the following table.

[72 FR 38905, July 16, 2007, as amended at 73 FR 15928, Mar. 26, 2008]

TABLE 1 TO SUBPART NNNNNN OF PART 63—HAP EMISSIONS SOURCES

| Process | Emissions sources |
|---|---|
| 1. Sodium chromate production. | a. Ball mill used to grind chromite ore. |
| | b. Dryer used to dry chromite ore. |
| | c. Rotary kiln used to roast chromite ore to produce sodium chromate. |
| | d. Secondary rotary kiln used to recycle and refine residues containing chromium compounds. |
| | e. Residue dryer system. |
| | f. Quench tanks. |
| 2. Sodium dichromate production. | a. Stack on the electrolytic cell system used to produce sodium dichromate. |
| | b. Sodium dichromate crystallization unit. |
| | c. Sodium dichromate drying unit. |
| 3. Chromic acid production. | a. Electrolytic cell system used to produce chromic acid. |
| | b. Melter used to produce chromic acid. |
| | c. Chromic acid crystallization unit. |
| | d. Chromic acid dryer. |
| 4. Chromic oxide production. | a. Primary rotary roasting kiln used to produce chromic oxide. |
| | b. Chromic oxide filter. |
| | c. Chromic oxide dryer. |
| | d. Chromic oxide grinding unit. |
| | e. Chromic oxide storage vessel. |
| | f. Secondary rotary roasting kiln. |
| | g. Quench tanks. |
| 5. Chromium hydrate production. | a. Furnace used to produce chromium hydrate. |
| | b. Chromium hydrate grinding unit. |

As required in § 63.11411(a), you must comply with the requirements of the General Provisions (40 CFR part 63, subpart A) as shown in the following table.

TABLE 2 TO SUBPART NNNNNN OF PART 63—APPLICABILITY OF GENERAL PROVISIONS TO SUBPART NNNNNN

| Citation | Subject | Applies | Explanation |
|---|---|---|---|
| 63.1(a)(1), (a)(2), (a)(3), (a)(4), (a)(6), (a)(10)–(a)(12), (b)(1), (b)(3), (c)(1), (c)(2), (c)(5), (e). | Applicability | Yes. | |
| 63.1(a)(5), (a)(7)–(a)(9), (b)(2), (c)(3), (c)(4), (d). | Reserved | No. | |
| 63.2 | Definitions | Yes. | |
| 63.3 | Units and Abbreviations | Yes. | |
| 63.4 | Prohibited Activities and Circumvention. | Yes. | |
| 63.5 | Preconstruction Review and Notification Requirements. | No. | |
| 63.6(a), (b)(1)–(b)(5), (b)(7), (c)(1), (c)(2), (c)(5), (e)(1), (e)(3)(i), (e)(3)(iii)–(e)(3)(ix), (f), (g), (i), (j). | Compliance with Standards and Maintenance Requirements. | Yes | The startup, shutdown, and malfunction requirements in § 63.6(e)(3) apply at new and existing area sources that choose to comply with § 63.11410(k)(2) instead of the requirements in § 63.11410(k)(1). |
| 63.6(b)(6), (c)(3), (c)(4), (d), (e)(2), (e)(3)(ii), (h)(3), (h)(5)(iv). | Reserved | No. | |
| 63.6(h)(1)–(h)(4), (h)(5)(i)–(h)(5)(iii), (h)(6)–(h)(9). | No | Subpart NNNNNN does not include opacity or visible emissions standards or require a continuous opacity monitoring system.. | |
| 63.7(a), (e), (f), (g), (h) | Performance Testing Requirements. | Yes | Subpart NNNNNN requires a performance test for a new source; a test for an existing source is not required under the conditions specified in § 63.11410(i). |

| Citation | Subject | Applies | Explanation |
|---|---|---|---|
| 63.7(b), (c) | Yes/No | Requirements for notification of performance test and for quality assurance program apply to new area sources but not existing area sources.. | |
| 63.8(a)(1), (a)(2), (b), (c)(1)–(c)(3), (f)(1)–(5). | Monitoring Requirements | Yes. | |
| 63.8(a)(3) | Reserved | No. | |
| 63.8(a)(4) | No | Subpart NNNNNN does not require flares.. | |
| 63.8(c)(4)–(c)(8), (d), (e), (f)(6), (g). | No | Subpart NNNNNN establishes requirements for continuous parameter monitoring systems.. | |
| 63.9(a), (b)(1), (b)(5), (c), (d), (i), (j). | Notification Requirements | Yes. | |
| 63.9(e) | Yes/No | Notification of performance test is required only for new area sources.. | |
| 63.9(b)(2) | Yes. | | |
| 63.9(b)(3), (h)(4) | Reserved | No. | |
| 63.9(b)(4), (h)(5) | No. | | |
| 63.9(f), (g) | No | Subpart NNNNNN does not include opacity or visible emissions standards or require a continuous opacity monitoring system or continuous emissions monitoring system.. | |
| 63.9(h)(1)–(h)(3), (h)(6) | Yes. | | |
| 63.10(a), (b)(1), (b)(2)(xii), (b)(2)(xiv), (b)(3). | Recordkeeping Requirements. | Yes. | |
| 63.10(b)(2)(i)–(b)(2)(v) | Yes. | Recordkeeping requirements for startups, shutdowns, and malfunctions apply to new and existing area sources that choose to comply with §63.11410(k)(2).. | |
| 63.10(b)(2)(vi)–(b)(2)(ix), (c)(1), (c)(5)–(c)(14). | Yes/No | Requirements apply to continuous parameter monitoring systems at new area sources but not existing area sources.. | |
| 63.10(b)(2)(vii)(A)–(B), (b)(2)(x), (b)(2)(xiii). | No. | | |
| 63.10(c)(2)–(c)(4), (c)(9) | Reserved | No. | |
| 63.10(d)(1), (d)(4), (f) | Reporting Requirements | Yes. | |
| 63.10(d)(2) | Yes | Report of performance test results applies to new area sources; the results of a previous test may be submitted for an existing area source under the conditions specified in §63.11410(i).. | |

| Citation | Subject | Applies | Explanation |
|---|---|---|---|
| 63.10(d)(3) | No | Subpart NNNNNN does not include opacity or visible emissions limits.. | |
| 63.10(d)(5) | Yes | Requirements for startup, shutdown, and malfunction reports apply to new and existing area sources that choose to comply with § 63.11410(k)(2).. | |
| 63.10(e)(1)–(e)(2), (e)(4) | No | Subpart NNNNNN does not require a continuous emissions monitoring system or continuous opacity monitoring system.. | |
| 63.10(e)(3) | Yes/No | Semiannual reporting requirements apply to new area sources but not existing area sources.. | |
| 63.11 | Control Device Requirements. | No | Subpart NNNNNN does not require flares. |
| 63.12 | State Authorities and Delegations. | Yes. | |
| 63.13 | Addresses | Yes. | |
| 63.14 | Incorporations by Reference | Yes. | |
| 63.15 | Availability of Information and Confidentiality. | Yes. | |
| 63.16 | Performance Track Provisions. | Yes. | |

## Subpart OOOOOO—National Emission Standards for Hazardous Air Pollutants for Flexible Polyurethane Foam Production and Fabrication Area Sources

SOURCE: 72 FR 38910, July 16, 2007, unless otherwise noted.

APPLICABILITY AND COMPLIANCE DATES

### § 63.11414 Am I subject to this subpart?

(a) You are subject to this subpart if you own or operate an area source of hazardous air pollutant (HAP) emissions that meets the criteria in paragraph (a)(1) or (2) of this section.

(1) You own or operate a plant that produces flexible polyurethane foam or rebond foam as defined in § 63.1292 of subpart III.

(2) You own or operate a flexible polyurethane foam fabrication facility, as defined in § 63.11419.

(b) The provisions of this subpart apply to each new and existing affected source that meets the criteria listed in paragraphs (b)(1) through (4) of this section.

(1) A slabstock flexible polyurethane foam production affected source is the collection of all equipment and activities necessary to produce slabstock flexible polyurethane foam.

(2) A molded flexible polyurethane foam production affected source is the collection of all equipment and activities necessary to produce molded foam.

(3) A rebond foam production affected source is the collection of all equipment and activities necessary to produce rebond foam.

(4) A flexible polyurethane foam fabrication affected source is the collection of all equipment and activities at a flexible polyurethane foam fabrication facility where adhesives are used to bond foam to foam or other substrates. Equipment and activities at flexible polyurethane foam fabrication facilities which do not use adhesives to bond foam to foam or other substrates are not flexible polyurethane foam fabrication affected sources.

(c) An affected source is existing if you commenced construction or reconstruction of the affected source on or before April 4, 2007.

(d) An affected source is new if you commenced construction or reconstruction of the affected source after April 4, 2007.

(e) This subpart does not apply to research and development facilities, as defined in section 112(c)(7) of the Clean Air Act (CAA).

(f) You are exempt from the obligation to obtain a permit under 40 CFR part 70 or 40 CFR part 71, provided you are not otherwise required by law to obtain a permit under 40 CFR 70.3(a) or 40 CFR 71.3(a). Notwithstanding the previous sentence, you must continue to comply with the provisions of this subpart.

### §63.11415 What are my compliance dates?

(a) If you own or operate an existing slabstock flexible polyurethane foam production affected source, you must achieve compliance with the applicable provisions in this subpart by July 16, 2008.

(b) If you own or operate an existing molded flexible polyurethane foam affected source, an existing rebond foam production affected sources, or an existing flexible polyurethane foam fabrication affected source, you must achieve compliance with the applicable provisions in this subpart by July 16, 2007.

(c) If you startup a new affected source on or before July 16, 2007, you must achieve compliance with the applicable provisions in this subpart not later than July 16, 2007.

(d) If you startup a new affected source after July 16, 2007, you must achieve compliance with the provisions in this subpart upon startup of your affected source.

STANDARDS AND COMPLIANCE REQUIREMENTS

### §63.11416 What are the standards for new and existing sources?

(a) If you own or operate a slabstock flexible polyurethane foam production affected source, you must meet the requirements in paragraph (b) of this section. If you own or operate a molded foam affected source, you must meet the requirements in paragraph (c) of this section. If you own or operate a rebond foam affected source, you must meet the requirements in paragraph (d) of this section. If you own or operate a flexible polyurethane foam fabrication affected source, you must meet the requirements in paragraph (e) of this section.

(b) If you own or operate a new or existing slabstock polyurethane foam production affected source, you must comply with the requirements in either paragraph (b)(1) or (2) of this section.

(1) Comply with §63.1293(a) or (b) of subpart III, except that you must use Equation 1 of this section to determine the HAP auxiliary blowing agent (ABA) formulation limit for each foam grade instead of Equation 3 of §63.1297 of subpart III. You must use zero as the formulation limitation for any grade of foam where the result of the formulation equation (using Equation 1 of this section) is negative (i.e., less than zero):

$$ABA_{limit} = -0.2\,(IFD) - 19.1\left(\frac{1}{IFD}\right) - 15.3\,(DEN) - 6.8\left(\frac{1}{DEN}\right) + 36.5 \quad \text{(Equation 1)}$$

Where:

$ABA_{limit}$ = HAP ABA formulation limitation, parts methylene chloride ABA allowed per hundred parts polyol (pph).

IFD = Indentation force deflection, pounds.

DEN = Density, pounds per cubic foot.

(2) Use no material containing methylene chloride for any purpose in any slabstock flexible foam production process.

(c) If you own or operate a new or existing molded foam affected source, you must comply with the requirements in paragraphs (c)(1) and (2) of this section.

(1) You must not use a material containing methylene chloride as an equipment cleaner to flush the mixhead or use a material containing methylene chloride elsewhere as an equipment cleaner in a molded flexible polyurethane foam process.

(2) You must not use a mold release agent containing methylene chloride in a molded flexible polyurethane foam process.

(d) If you own or operate a new or existing rebond foam affected source, you must comply with the requirements in paragraphs (d)(1) and (2) of this section.

(1) You must not use a material containing methylene chloride as an equipment cleaner in a rebond foam process.

(2) You must not use a mold release agent containing methylene chloride in a rebond foam process.

(e) If you own or operate a new or existing flexible polyurethane foam fabrication affected source, you must not use any adhesive containing methylene chloride in a flexible polyurethane foam fabrication process.

(f) You may demonstrate compliance with the requirements in paragraphs (b)(2) and (c) through (e) of this section using adhesive usage records, Material Safety Data Sheets, and engineering calculations.

[72 FR 38910, July 16, 2007, as amended at 73 FR 15928, Mar. 23, 2008]

### § 63.11417 What are the compliance requirements for new and existing sources?

(a) If you own or operate a slabstock flexible polyurethane foam production affected source, you must comply with the requirements in paragraph (b) of this section. If you own or operate a molded foam affected source, rebond foam affected source, or a loop slitter at a flexible polyurethane foam fabrication affected source you must comply with the requirements in paragraphs (c) and (d) of this section.

(b) Each owner or operator of a new or existing slabstock flexible polyurethane foam production affected source who chooses to comply with § 63.11416(b)(1) must comply with paragraph (b)(1) of this section. Each owner or operator of a new or existing slabstock flexible polyurethane foam production affected source who chooses to comply with § 63.11416(b)(2) must comply with paragraphs (b)(2) and (3) of this section.

(1) You must comply with paragraphs (b)(1)(i) through (v) of this section.

(i) The monitoring requirements in § 63.1303 of subpart III.

(ii) The testing requirements in § 63.1304 or § 63.1305 of subpart III.

(iii) The reporting requirements in § 63.1306 of subpart III, with the exception of the reporting requirements in § 63.1306(d)(1), (2), (4), and (5) of subpart III.

(iv) The recordkeeping requirements in § 63.1307 of subpart III, with the exception of the recordkeeping requirements in § 63.1307(a)(1), (b)(1)(i), and (b)(2).

(v) The compliance demonstration requirements in § 63.1308(a), (c), and (d) of subpart III.

(2) You must submit a notification of compliance status report no later than 180 days after your compliance date. The report must contain this certification of compliance, signed by a responsible official, for the standards in § 63.11416(b)(2): ''This facility uses no material containing methylene chloride for any purpose on any slabstock flexible foam process.''

(3) You must maintain records of the information used to demonstrate compliance, as required in § 63.11416(f). You must maintain the records for 5 years, with the last 2 years of data retained on site. The remaining 3 years of data may be maintained off site.

(c) You must have a compliance certification on file by the compliance date. This certification must contain the statements in paragraph (c)(1), (2), or (3) of this section, as applicable, and must be signed by a responsible official.

(1) For a molded foam affected source:

(i) ''This facility does not use any equipment cleaner to flush the mixhead which contains methylene chloride, or any other equipment cleaner containing methylene chloride in a molded flexible polyurethane foam process in accordance with § 63.11416(c)(1).''

(ii) ''This facility does not use any mold release agent containing methylene chloride in a molded flexible polyurethane foam process in accordance with §63.11416(c)(2).''

(2) For a rebond foam affected source:

(i) ''This facility does not use any equipment cleaner which contains methylene chloride in a rebond flexible polyurethane foam process in accordance with §63.11416(d)(1).''

(ii) ''This facility does not use any mold release agent containing methylene chloride in a rebond flexible polyurethane foam process in accordance with §63.11416(d)(2).''

(3) For a flexible polyurethane foam fabrication affected source containing a loop slitter: ''This facility does not use any adhesive containing methylene chloride on a loop slitter process in accordance with §63.11416(e).''

(d) For molded foam affected sources, rebond foam affected sources, and flexible polyurethane foam fabrication affected sources containing a loop slitter, you must maintain records of the information used to demonstrate compliance, as required in §63.11416(f). You must maintain the records for 5 years, with the last 2 years of data retained on site. The remaining 3 years of data may be maintained off site.

[72 FR 38910, July 16, 2007, as amended at 73 FR 15929, Mar. 26, 2008]

OTHER REQUIREMENTS AND INFORMATION

### §63.11418 What General Provisions apply to this subpart?

The provisions in 40 CFR part 63, subpart A, applicable to sources subject to §63.11416(b)(1) are specified in Table 1 of this subpart.

### §63.11419 What definitions apply to this subpart?

The terms used in this subpart are defined in the CAA; §63.1292 of subpart III; §63.8830 of subpart MMMMM; §63.2 of subpart A; and in this section as follows:

*Flexible polyurethane foam fabrication facility* means a facility where pieces of flexible polyurethane foam are cut, bonded, and/or laminated together or to other substrates.

### §63.11420 Who implements and enforces this subpart?

(a) This subpart can be implemented and enforced by the U.S. EPA or a delegated authority such as a State, local, or tribal agency. If the U.S. EPA Administrator has delegated authority to a State, local, or tribal agency pursuant to 40 CFR part 63, subpart E, then that Agency has the authority to implement and enforce this subpart. You should contact your U.S. EPA Regional Office to find out if this subpart is delegated to a State, local, or tribal agency within your State.

(b) In delegating implementation and enforcement authority of this subpart to a State, local, or tribal agency under 40 CFR part 63, subpart E, the approval authorities contained in paragraphs (b)(1) through (4) of this section are retained by the Administrator of the U.S. EPA and are not transferred to the State, local, or tribal agency.

(1) Approval of an alternative nonopacity emissions standard under §63.6(g).

(2) Approval of a major change to test methods under §63.7(e)(2)(ii) and (f). A ''major change to test method'' is defined in §63.90.

(3) Approval of a major change to monitoring under §63.8(f). A ''major change to monitoring'' is defined in §63.90.

(4) Approval of a major change to recordkeeping/reporting under §63.10(f). A ''major change to recordkeeping/reporting'' is defined in §63.90.

[72 FR 38910, July 16, 2007, as amended at 73 FR 15929, Mar. 26, 2008]

TABLE 1 TO SUBPART OOOOOO OF PART 63—APPLICABILITY OF GENERAL PROVISIONS TO SUBPART OOOOOO

As required in §63.11418, sources subject to §63.11416(b)(1) must comply with the requirements of the NESHAP General Provisions (40 CFR part 63, subpart A) as shown in the following table.

| Subpart A reference | Applies to Subpart OOOOOO? | Comment |
|---|---|---|
| § 63.1 | Yes. | |
| § 63.2 | Yes | Definitions are modified and supplemented by § 63.11419. |
| § 63.3 | Yes. | |
| § 63.4 | Yes. | |
| § 63.5 | Yes. | |
| § 63.6(a)–(d) | Yes. | |
| § 63.6(e)(1)–(2) | Yes. | |
| § 63.6(e)(3) | No | Owners and operators of subpart OOOOOO affected sources are not required to develop and implement a startup, shutdown, and malfunction plan. |
| § 63.6 (f)–(g) | Yes. | |
| § 63.6(h) | No | Subpart OOOOOO does not require opacity and visible emissions standards. |
| § 63.6 (i)–(j) | Yes. | |
| § 63.7 | No | Performance tests not required by subpart OOOOOO. |
| § 63.8 | No | Continuous monitoring, as defined in subpart A, is not required by subpart OOOOOO. |
| § 63.9(a)–(d) | Yes. | |
| § 63.9(e)–(g) | No. | |
| § 63.9(h) | No | Subpart OOOOOO specifies Notification of Compliance Status requirements. |
| § 63.9 (i)–(j) | Yes. | |
| § 63.10(a)–(b) | Yes | Except that the records specified in § 63.10(b)(2) are not required. |
| § 63.10(c) | No. | |
| § 63.10(d)(1) | Yes. | |
| § 63.10(d)(2)–(3) | No. | |
| § 63.10(d)(4) | Yes. | |
| § 63.10(d)(5) | No. | |
| § 63.10(e) | No. | |
| § 63.10(f) | Yes. | |
| § 63.11 | No. | |
| § 63.12 | Yes. | |
| § 63.13 | Yes. | |
| § 63.14 | Yes. | |
| § 63.15 | Yes. | |
| § 63.16 | Yes. | |

[72 FR 38910, July 16, 2007, as amended at 73 FR 15929, Mar. 26, 2008]

## Subpart PPPPPP—National Emission Standards for Hazardous Air Pollutants for Lead Acid Battery Manufacturing Area Sources

SOURCE: 72 FR 38913, July 16, 2007, unless otherwise noted.

APPLICABILITY AND COMPLIANCE DATES

### § 63.11421 Am I subject to this subpart?

(a) You are subject to this subpart if you own or operate a lead acid battery manufacturing plant that is an area source of hazardous air pollutants (HAP) emissions.

(b) This subpart applies to each new or existing affected source. The affected source is each lead acid battery manufacturing plant. The affected source includes all grid casting facilities, paste mixing facilities, three-process operation facilities, lead oxide manufacturing facilities, lead reclamation facilities, and any other lead-emitting operation that is associated with the lead acid battery manufacturing plant.

(1) An affected source is existing if you commenced construction or reconstruction of the affected source on or before April 4, 2007.

(2) An affected source is new if you commenced construction or reconstruction of the affected source after April 4, 2007.

(c) This subpart does not apply to research and development facilities, as defined in section 112(c)(7) of the Clean Air Act (CAA).

(d) You are exempt from the obligation to obtain a permit under 40 CFR part 70 or 40 CFR part 71, provided you are not otherwise required by law to obtain a permit under 40 CFR 70.3(a) or 40 CFR 71.3(a). Notwithstanding the previous sentence, you must continue

to comply with the provisions of this subpart.

### §63.11422 What are my compliance dates?

(a) If you own or operate an existing affected source, you must achieve compliance with the applicable provisions in this subpart by no later than July 16, 2008.

(b) If you startup a new affected source on or before July 16, 2007, you must achieve compliance with the applicable provisions in this subpart not later than July 16, 2007.

(c) If you startup a new affected source after July 16, 2007, you must achieve compliance with the provisions in this subpart upon startup of your affected source.

## STANDARDS AND COMPLIANCE REQUIREMENTS

### §63.11423 What are the standards and compliance requirements for new and existing sources?

(a) You must meet all the standards for lead in 40 CFR 60.372.

(b) You must meet the monitoring requirements in paragraphs (b)(1) and (2) of this section.

(1) For any emissions point controlled by a scrubbing system, you must meet the requirements in 40 CFR 60.373.

(2) For any emissions point controlled by a fabric filter, you must meet the requirements of paragraph (b)(2)(i) of this section and either paragraph (b)(2)(ii) or (iii) of this section. Fabric filters equipped with a high efficiency particulate air (HEPA) filter or other secondary filter are allowed to monitor less frequently, as specified in paragraph (b)(2)(iv) of this section.

(i) You must perform semiannual inspections and maintenance to ensure proper performance of each fabric filter. This includes inspection of structural and filter integrity. You must record the results of these inspections.

(ii) You must install, maintain, and operate a pressure drop monitoring device to measure the differential pressure drop across the fabric filter during all times when the process is operating. The pressure drop shall be recorded at least once per day. If a pressure drop is observed outside of the normal operational ranges, you must record the incident and take immediate corrective actions. You must also record the corrective actions taken. You must submit a monitoring system performance report in accordance with §63.10(e)(3).

(iii) You must conduct a visible emissions observation at least once per day to verify that no visible emissions are occurring at the discharge point to the atmosphere from any emissions source subject to the requirements of paragraph (a) of this section. If visible emissions are detected, you must record the incident and conduct an opacity measurement in accordance with 40 CFR 60.374(b)(3). You must record the results of each opacity measurement. If the measurement exceeds the applicable opacity standard in 40 CFR 60.372(a)(7) or (8), you must submit this information in an excess emissions report required under §63.10(e)(3).

(iv) Fabric filters equipped with a HEPA filter or other secondary filter are allowed to monitor less frequently, as specified in paragraph (b)(2)(iv)(A) or (B) of this section.

(A) If you are using a pressure drop monitoring device to measure the differential pressure drop across the fabric filter in accordance with paragraph (b)(2)(ii) of this section, you must record the pressure drop at least once per week. If a pressure drop is observed outside of the normal operational ranges, you must record the incident and take immediate corrective actions. You must also record the corrective actions taken. You must submit a monitoring system performance report in accordance with §63.10(e)(3).

(B) If you are conducting visible emissions observations in accordance with paragraph (b)(2)(iii) of this section, you must conduct such observations at least once per week and record the results in accordance with paragraph (b)(2)(iii) of this section. If visible emissions are detected, you must record the incident and conduct an opacity measurement in accordance with 40 CFR 60.374(b)(3). You must record the results of each opacity measurement. If the measurement exceeds the applicable opacity standard in 40 CFR 60.372(a)(7) or (8), you must submit this information in an excess

emissions report required under § 63.10(e)(3).

(c) You must meet the testing requirements in 40 CFR 60.374.

(1) Existing sources are not required to conduct a performance test if a prior performance test was conducted using the same methods specified in 40 CFR 60.374 and either no process changes have been made since the test, or you can demonstrate that the results of the performance test, with or without adjustments, reliably demonstrate compliance with this subpart despite process changes.

(2) Sources without a prior performance test, as described in paragraph (c)(1) of this section, must conduct a performance test using the methods specified in 40 CFR 60.374 by 180 days after the compliance date.

[72 FR 38913, July 16, 2007, as amended at 73 FR 15929, Mar. 26, 2008]

### § 63.11424 [Reserved]

OTHER REQUIREMENTS AND INFORMATION

### § 63.11425 What General Provisions apply to this subpart?

(a) The provisions in 40 CFR part 63, subpart A, that are applicable to this subpart are specified in Table 1 to this subpart.

(b) For existing sources, the initial notification required by § 63.9(b) must be submitted not later than November 13, 2007, or no later than 120 days after the source becomes subject to this subpart, whichever is later.

(c) For existing sources, the initial notification of compliance required by § 63.9(h) must be submitted not later than March 13, 2009, or no later than 120 days after the source becomes subject to this subpart, whichever is later.

[72 FR 38913, July 16, 2007, as amended at 73 FR 15929, Mar. 26, 2008; 85 FR 73920, Nov. 19, 2020]

### § 63.11426 What definitions apply to this subpart?

The terms used in this subpart are defined in the CAA; 40 CFR 60.371; 40 CFR 60.2 for terms used in the applicable provisions of 40 CFR part 60, subpart A; and § 63.2 for terms used in the applicable provisions of 40 CFR part 63, subpart A.

[72 FR 38913, July 16, 2007, as amended at 73 FR 15929, Mar. 26, 2008]

### § 63.11427 Who implements and enforces this subpart?

(a) This subpart can be implemented and enforced by the U.S. EPA or a delegated authority such as a State, local, or tribal agency. If the U.S. EPA Administrator has delegated authority to a State, local, or tribal agency pursuant to 40 CFR part 63, subpart E, then that Agency has the authority to implement and enforce this subpart. You should contact your U.S. EPA Regional Office to find out if this subpart is delegated to a State, local, or tribal agency within your State.

(b) In delegating implementation and enforcement authority of this subpart to a State, local, or tribal agency under 40 CFR part 63, subpart E, the approval authorities contained in paragraphs (b)(1) through (4) of this section are retained by the Administrator of the U.S. EPA and are not transferred to the State, local, or tribal agency.

(1) Approval of an alternative non-opacity emissions standard under § 63.6(g).

(2) Approval of a major change to test methods under § 63.7(e)(2)(ii) and (f). A ''major change to test method'' is defined in § 63.90.

(3) Approval of a major change to monitoring under § 63.8(f). A ''major change to monitoring'' is defined in § 63.90.

(4) Approval of a major change to recordkeeping/reporting under § 63.10(f). A ''major change to recordkeeping/reporting'' is defined in § 63.90.

[72 FR 38913, July 16, 2007, as amended at 73 FR 15929, Mar. 26, 2008]

TABLE 1 TO SUBPART PPPPPP OF PART 63—APPLICABILITY OF GENERAL PROVISIONS TO SUBPART PPPPPP

As required in §63.11425, you must comply with the requirements of the NESHAP General Provisions (40 CFR part 63, subpart A) as shown in the following table.

| Citation | Subject | Applies to Subpart PPPPPP? | Explanation |
|---|---|---|---|
| 63.1 | Applicability | Yes. | |
| 63.2 | Definitions | Yes. | |
| 63.3 | Units and Abbreviations. | | |
| 63.4 | Prohibited Activities and Circumvention. | Yes. | |
| 63.5 | Preconstruction Review and Notification Requirements. | No. | |
| 63.6(a)–(d), (e)(1), (f)–(j) | Compliance with Standards and Maintenance Requirements. | Yes. | |
| 63.6(e)(3) | | No | Subpart PPPPPP does not require a startup, shutdown, and malfunction plan. |
| 63.7 | Performance Testing Requirements. | Yes. | |
| 63.8 | Monitoring Requirements | Yes. | |
| 63.9 | Notification Requirements | Yes. | |
| 63.10(a)–(c), (d)(1)–(4), (e), (f). | Recordkeeping and Reporting Requirements. | Yes. | |
| 63.10(d)(5) | | No | Subpart PPPPPP does not require a startup, shutdown, and malfunction plan. |
| 63.11 | Control Device Requirements. | No | Subpart PPPPPP does not require flares. |
| 63.12 | State Authorities and Delegations. | Yes. | |
| 63.13 | Addresses | Yes. | |
| 63.14 | Incorporations by Reference. | Yes. | |
| 63.15 | Availability of Information and Confidentiality. | Yes. | |
| 63.16 | Performance Track Provisions. | Yes. | |
| 63.1(a)(5), (a)(7)–(9), (b)(2), (c)(3), (d), 63.6(b)(6), (c)(3), (c)(4), (d), (e)(2), (e)(3)(ii), (h)(3), (h)(5)(iv), 63.8(a)(3), 63.9(b)(3), (h)(4), 63.10(c)(2)–(c)(4), (c)(9). | Reserved | No. | |

[72 FR 38913, July 16, 2007, as amended at 73 FR 15929, Mar. 26, 2008]

# Subpart QQQQQQ—National Emission Standards for Hazardous Air Pollutants for Wood Preserving Area Sources

SOURCE: 72 FR 38915, July 16, 2007, unless otherwise noted.

## APPLICABILITY AND COMPLIANCE DATES

### §63.11428 Am I subject to this subpart?

(a) You are subject to this subpart if you own or operate a wood preserving operation that is an area source of hazardous air pollutant (HAP) emissions.

(b) The affected source is each new or existing wood preserving operation.

(1) An affected source is existing if you commenced construction or reconstruction of the affected source on or before April 4, 2007.

(2) An affected source is new if you commenced construction or reconstruction of the affected source after April 4, 2007.

(c) You are exempt from the obligation to obtain a permit under 40 CFR part 70 or 40 CFR part 71, provided you are not otherwise required by law to obtain a permit under 40 CFR 70.3(a) or 40 CFR 71.3(a). Notwithstanding the previous sentence, you must continue to comply with the provisions of this subpart.

### § 63.11429 What are my compliance dates?

(a) If you have an existing affected source, you must achieve compliance with applicable provisions in this subpart by July 16, 2007.

(b) If you startup a new affected source on or before July 16, 2007, you must achieve compliance with applicable provisions in this subpart not later than July 16, 2007.

(c) If you startup a new affected source after July 16, 2007, you must achieve compliance with applicable provisions in this subpart upon initial startup.

STANDARDS

### § 63.11430 What are the standards?

(a) If you use a pressure treatment process with any wood preservative containing chromium, arsenic, dioxins, or methylene chloride at a new or existing area source, the preservative must be applied to the wood product inside a retort or similarly enclosed vessel.

(b) If you use a thermal treatment process with any wood preservative containing chromium, arsenic, dioxins, or methylene chloride at a new or existing area source, the preservative must be applied using process treatment tanks equipped with an air scavenging system to control emissions.

(c) If you use any wood preservative containing chromium, arsenic, dioxins, or methylene chloride at a new or existing area source, you must prepare and operate according to a management practice plan to minimize air emissions from the preservative treatment of wood at a new or existing area source. You may use your standard operating procedures to meet the requirements for a management practice plan if it includes the minimum activities required for a management practice plan. The management practice plan must include, but is not limited to, the following activities:

(1) Minimize preservative usage;

(2) Maintain records on the type of treatment process and types and amounts of wood preservatives used at the facility;

(3) For the pressure treatment process, maintain charge records identifying pressure reading(s) inside the retorts (or similarly enclosed vessel);

(4) For the thermal treatment process, maintain records that the air scavenging system is in place and operated properly during the treatment process;

(5) Store treated wood product on drip pads or in a primary containment area to convey preservative drippage to a collection system until drippage has ceased;

(6) For the pressure treatment process, fully drain the retort to the extent practicable, prior to opening the retort door;

(7) Promptly collect any spills; and

(8) Perform relevant corrective actions or preventative measures in the event of a malfunction before resuming operations.

### § 63.11431 [Reserved]

OTHER REQUIREMENTS AND INFORMATION

### § 63.11432 What General Provisions apply to this subpart?

(a) If you own or operate a new or existing affected source that uses any wood preservative containing chromium, arsenic, dioxins, or methylene chloride, you must comply with the requirements of the General Provisions in 40 CFR part 63, subpart A, according to Table 1 to this subpart.

(b) If you own or operate a new or existing affected source that uses any wood preservative containing chromium, arsenic, dioxins, or methylene chloride, you must submit an initial notification of applicability required by § 63.9(b)(2) no later than 90 days after the applicable compliance date specified in § 63.11429, or no later than 90 days after the source becomes subject to this subpart, whichever is later.

The initial notification may be combined with the notification of compliance status required in paragraph (c) of this section. The notification of applicability must include the following information:

(1) The name and address of the owner or operator;

(2) The address (i.e., physical location) of the affected source; and

(3) An identification of the relevant standard, or other requirement, that is the basis of the notification and the source's compliance date.

(c) If you own or operate a new or existing affected source that uses any wood preservative containing chromium, arsenic, dioxins, or methylene chloride, you must submit a notification of compliance status required by §63.9(h) no later than 90 days after the applicable compliance date specified in §63.11429, or no later than 90 days after the source becomes subject to this subpart, whichever is later. Your notification of compliance status must include this certification of compliance, signed by a responsible official, for the standards in §63.11430: ''This facility complies with the management practices to minimize air emissions from the preservative treatment of wood in accordance with §63.11430.''

(d) You must report any deviation from the requirements of this subpart within 30 days of the deviation.

[72 FR 38915, July 16, 2007, as amended at 73 FR 15929, Mar. 26, 2008; 85 FR 73920, Nov. 19, 2020]

### §63.11433 What definitions apply to this subpart?

Terms used in this subpart are defined in the Clean Air Act, §63.2, and in this section as follows:

*Air scavenging system* means an air collection and control system that collects and removes vapors from a thermal treatment process vessel and vents the emissions to a vapor recovery tank that collects condensate from the vapors.

*Chromated copper arsenate* (CCA) means a chemical wood preservative consisting of mixtures of water-soluble chemicals containing metal oxides of chromium, copper, and arsenic. CCA is used in pressure treated wood to protect wood from rotting due to insects and microbial agents.

*Deviation* means any instance in which an affected source subject to this subpart, or an owner or operator of such a source:

(1) Fails to meet any requirement or obligation established by this subpart, including but not limited to any emissions limitation or management practice;

(2) Fails to meet any term or condition that is adopted to implement an applicable requirement in this subpart and that is included in the operating permit for any affected source required to obtain such a permit; or

(3) Fails to meet any emissions limitation or management practice in this subpart during startup, shutdown, or malfunction, regardless of whether or not such failure is permitted by this subpart.

*Pressure treatment process* means a wood treatment process involving an enclosed vessel, usually a retort, and the application of pneumatic or hydrostatic pressure to expedite the movement of preservative liquid into the wood.

*Responsible official* means responsible official as defined in 40 CFR 70.2.

*Retort* means an airtight pressure vessel, typically a long horizontal cylinder, used for the pressure impregnation of wood products with a liquid wood preservative.

*Thermal treatment process* means a non-pressurized wood treatment process where the wood is exposed to a heated preservative.

*Wood preserving* means the pressure or thermal impregnation of chemicals into wood to provide effective long-term resistance to attack by fungi, bacteria, insects, and marine borers.

### §63.11434 Who implements and enforces this subpart?

(a) This subpart can be implemented and enforced by the U.S. EPA or a delegated authority such as a State, local, or tribal agency. If the U.S. EPA Administrator has delegated authority to a State, local, or tribal agency pursuant to 40 CFR part 63, subpart E, then that Agency has the authority to implement and enforce this subpart. You should contact your U.S. EPA Regional

Office to find out if this subpart is delegated to your State, local, or tribal agency.

(b) In delegating implementation and enforcement authority of this subpart to a State, local, or tribal agency under 40 CFR part 63, subpart E, the authorities contained in paragraphs (b)(1) through (4) of this section are retained by the Administrator of the U.S. EPA and are not transferred to the State, local, or tribal agency.

(1) Approval of an alternative nonopacity emissions standard under § 63.6(g).

(2) Approval of a major change to test methods under § 63.7(e)(2)(ii) and (f). A ''major change to test method'' is defined in § 63.90

(3) Approval of a major change to monitoring under § 63.8(f). A ''major change to monitoring'' is defined in § 63.90.

(4) Approval of a major change to recordkeeping/reporting under § 63.10(f). A ''major change to recordkeeping/reporting'' is defined in § 63.90.

[72 FR 38915, July 16, 2007, as amended at 73 FR 15929, Mar. 26, 2008]

TABLE 1 TO SUBPART QQQQQQ OF PART 63—APPLICABILITY OF GENERAL PROVISIONS TO SUBPART QQQQQQ

As required in § 63.11432, you must comply with the requirements of the NESHAP General Provisions (40 CFR part 63, subpart A) as shown in the following table.

| Citation | Subject | Applies to subpart QQQQQQ? | Explanation |
|---|---|---|---|
| 63.1(a)(1), (a)(2), (a)(3), (a)(4), (a)(6), (a)(10)–(a)(12)(b)(1), (b)(3), (c)(1), (c)(2), (c)(5), (e). | Applicability | Yes. | |
| 63.1(a)(5), (a)(7)–(a)(9), (b)(2), (c)(3), (c)(4), (d). | Reserved | No. | |
| 63.2 | Definitions | Yes. | |
| 63.3 | Units and Abbreviations | Yes. | |
| 63.4 | Prohibited Activities and Circumvention. | Yes. | |
| 63.5 | Preconstruction Review and Notification Requirements. | No. | |
| 63.6(a), (b)(1)–(b)(5), (b)(7), (c)(1), (c)(2), (c)(5), (e)(1), (i), (j). | Compliance with Standards and Maintenance Requirements. | Yes. | |
| 63.6(e)(3)(i), (e)(3)(iii)–(e)(3)(ix), (f), (g), (h)(1), (h)(2), (h)(4), (h)(5)(i)–(h)(5)(iii), (h)(5)(v), (h)(6)–(h)(9). | No | Subpart QQQQQQ does not require a startup, shutdown, and malfunction plan or contain emission or opacity limits.. | |
| 63.6(b)(6), (c)(3), (c)(4), (d), (e)(2), (e)(3)(ii), (h)(3), (h)(5)(iv). | Reserved | No. | |
| 63.7 | Performance Testing Requirements. | No | Subpart QQQQQQ does not require performance tests. |
| 63.8(a)(1), (a)(2), (a)(4), (b), (c), (d), (e), (f), (g). | Monitoring Requirements | No | Subpart QQQQQQ does not require monitoring of emissions. |
| 63.8(a)(3) | Reserved | No. | |
| 63.9(a), (b)(1), (b)(2), (b)(4), (b)(5), (c), (d), (h)(1), (h)(6), (i), (j). | Notification Requirements | Yes. | |
| 63.9(b)(2)(i)–(b)(2)(v), (h)(2)(i)–(h)(2)(ii), (h)(3), (h)(5). | | Yes. | |
| 63.9(e), (f), (g) | | No. | |
| 63.9(b)(3), (h)(4) | Reserved | No. | |
| 63.10(a), (b), (c)(1), (c)(5)–(c)(8), (c)(10)–(c)(14), (d), (e), (f). | Recordkeeping and Reporting Requirements. | No | Subpart QQQQQQ establishes requirements for a report of deviations within 30 days. |
| 63.10(c)(2)–(c)(4), (c)(9) | Reserved | No. | |
| 63.11 | Control Device Requirements. | No | Subpart QQQQQQ does not require flares. |

| Citation | Subject | Applies to subpart QQQQQQ? | Explanation |
|---|---|---|---|
| 63.12 | State Authorities and Delegations. | Yes. | |
| 63.13 | Addresses | Yes. | |
| 63.14 | Incorporations by Reference. | Yes. | |
| 63.15 | Availability of Information and Confidentiality. | Yes. | |
| 63.16 | Performance Track Provisions. | Yes. | |

[72 FR 38915, July 16, 2007, as amended at 73 FR 15929, Mar. 26, 2008]

## Subpart RRRRRR—National Emission Standards for Hazardous Air Pollutants for Clay Ceramics Manufacturing Area Sources

SOURCE: 72 FR 73197, Dec. 26, 2007, unless otherwise noted.

APPLICABILITY AND COMPLIANCE DATES

### §63.11435 Am I subject to this subpart?

(a) You are subject to this subpart if you own or operate a clay ceramics manufacturing facility (as defined in §63.11444), with an atomized glaze spray booth or kiln that fires glazed ceramic ware, that processes more than 45 megagrams per year (Mg/yr) (50 tons per year (tpy)) of wet clay and is an area source of hazardous air pollutant (HAP) emissions.

(b) If you are an owner or operator of an area source subject to this subpart, you are exempt from the obligation to obtain a permit under 40 CFR part 70 or 71, provided you are not required to obtain a permit under 40 CFR 70.3(a) or 71.3(a) for a reason other than your status as an area source under this subpart. You must continue to comply with the provisions of this subpart applicable to area sources.

### §63.11436 What parts of my plant does this subpart cover?

(a) This subpart applies to any existing or new affected source located at a clay ceramics manufacturing facility.

(b) The affected source includes all atomized glaze spray booths and kilns that fire glazed ceramic ware located at a clay ceramics manufacturing facility.

(c) An affected source is existing if you commenced construction or reconstruction of the affected source on or before September 20, 2007.

(d) An affected source is new if you commenced construction or reconstruction of the affected source after September 20, 2007.

### §63.11437 What are my compliance dates?

(a) If you have an existing affected source, you must comply with the standards no later than December 26, 2007.

(b) If you have a new affected source, you must comply with this subpart according to paragraphs (b)(1) and (2) of this section.

(1) If you start up your affected source on or before December 26, 2007, you must comply with this subpart no later than December 26, 2007.

(2) If you start up your affected source after December 26, 2007, you must comply with this subpart upon initial startup of your affected source.

STANDARDS, COMPLIANCE, AND MONITORING REQUIREMENTS

### §63.11438 What are the standards for new and existing sources?

(a) For each kiln that fires glazed ceramic ware, you must maintain the peak temperature below 1540 °C (2800 °F) and comply with one of the management practices in paragraphs (a)(1) and (2) of this section:

(1) Use natural gas, or equivalent clean-burning fuel, as the kiln fuel; or

(2) Use an electric-powered kiln.

(b) You must maintain annual wet glaze usage records for your facility.

(c) For each atomized glaze spray booth located at a clay ceramics manufacturing facility that uses more than 227 Mg/yr (250 tpy) of wet glaze(s), you must comply with the equipment standard requirements in paragraph (c)(1) of this section or the management practice in paragraph (c)(2) of this section.

(1) Control the emissions from the atomized glaze spray booth with an air pollution control device (APCD), as defined in § 63.11444.

(i) Operate and maintain the APCD in accordance with the equipment manufacturer's specifications; and

(ii) Monitor the APCD according to the applicable requirements in § 63.11440.

(2) Alternatively, use wet glazes containing less than 0.1 (weight) percent clay ceramics metal HAP.

(d) For each atomized glaze spray booth located at a clay ceramics manufacturing facility that uses 227 Mg/yr (250 tpy) or less of wet glaze(s), you must comply with one of the management practices or equipment standards in paragraphs (d)(1) and (2) of this section.

(1) Employ waste minimization practices, as defined in § 63.11444; or

(2) Alternatively, comply with the equipment standard requirements described in paragraph (c)(1) of this section or the management practice described in paragraph (c)(2) of this section.

(e) Surface applications (e.g., wet glazes) containing less than 0.1 (weight) percent clay ceramics metal HAP do not have to be considered in determination of the 227 Mg/yr (250 tpy) threshold for wet glaze usage.

### § 63.11439 What are the initial compliance demonstration requirements for new and existing sources?

(a) You must demonstrate initial compliance with the applicable management practices and equipment standards in § 63.11438 by submitting a Notification of Compliance Status. For any wet spray glaze operation controlled with an APCD, you must conduct an initial inspection of the control equipment as described in § 63.11440(b)(1) within 60 days of the compliance date and include the results of the inspection in the Notification of Compliance Status.

(b) You must demonstrate initial compliance with the applicable management practices or equipment standards in § 63.11438 by submitting the Notification of Compliance Status within 120 days after the applicable compliance date specified in § 63.11437.

### § 63.11440 What are the monitoring requirements for new and existing sources?

(a) For each kiln firing glazed ceramic ware, you must conduct a daily check of the peak firing temperature. If the peak temperature exceeds 1540 °C (2800 °F), you must take corrective action according to your standard operating procedures.

(b) For each existing or new atomized glaze spray booth equipped with an APCD, you must demonstrate compliance by conducting the monitoring activities in paragraph (b)(1) and either paragraph (b)(2) or (3) of this section:

(1) *Initial control device inspection*. You must conduct an initial inspection of each particulate matter (PM) control device according to the requirements in paragraphs (b)(1)(i) or (ii) of this section. You must conduct each inspection no later than 60 days after your applicable compliance date for each installed control device which has been operated within 60 days of the compliance date. For an installed control device which has not been operated within 60 days of the compliance date, you must conduct an initial inspection prior to startup of the control device.

(i) For each wet control system, you must verify the presence of water flow to the control equipment. You must also visually inspect the system ductwork and control equipment for leaks and inspect the interior of the control equipment (if applicable) for structural integrity and the condition of the control system. An initial inspection of the internal components of a wet control system is not required if an inspection has been performed within the past 12 months.

(ii) For each baghouse, you must visually inspect the system ductwork and baghouse unit for leaks. You must also inspect the inside of each baghouse for structural integrity and fabric filter

condition. You must record the results of the inspection and any maintenance action as required in paragraph (d) of this section. An initial inspection of the internal components of a baghouse is not required if an inspection has been performed within the past 12 months.

(2) *Periodic inspections/maintenance.* Except as provided in paragraph (b)(3) of this section, you must perform periodic inspections and maintenance of each PM control device following the initial inspection according to the requirements in paragraphs (b)(2)(i) or (ii) of this section.

(i) You must inspect and maintain each wet control system according to the requirements in paragraphs (b)(2)(i)(A) through (C) of this section.

(A) You must conduct a daily inspection to verify the presence of water flow to the wet control system.

(B) You must conduct weekly visual inspections of the system ductwork and control equipment for leaks.

(C) You must conduct inspections of the interior of the wet control system (if applicable) to determine the structural integrity and condition of the control equipment every 12 months.

(ii) You must inspect and maintain each baghouse according to the requirements in paragraphs (b)(2)(ii)(A) and (B) of this section.

(A) You must conduct weekly visual inspections of the system ductwork for leaks.

(B) You must conduct inspections of the interior of the baghouse for structural integrity and to determine the condition of the fabric filter every 12 months.

(3) As an alternative to the monitoring activities in paragraph (b)(2) of this section, you may demonstrate compliance by:

(i) Conducting a daily 30-minute visible emissions (VE) test (i.e., no visible emissions) using EPA Method 22 (40 CFR part 60, appendix A–7); or

(ii) Using an approved alternative monitoring technique under § 63.8(f).

(c) If the results of the visual inspection, VE test, or alternative monitoring technique conducted under paragraph (b) of this section indicate an exceedance, you must take corrective action according to the equipment manufacturer's specifications or instructions.

(d) You must maintain records of your monitoring activities described in paragraphs (a) through (c) of this section. You may use your existing operating permit documentation to meet the monitoring requirements if it includes, but is not limited to, the monitoring records listed in paragraphs (d)(1) through (5) of this section related to any kiln peak temperature checks, visual inspections, VE tests, or alternative monitoring:

(1) The date, place, and time;

(2) Person conducting the activity;

(3) Technique or method used;

(4) Operating conditions during the activity; and

(5) Results.

### § 63.11441 What are the notification requirements?

(a) You must submit an Initial Notification required by § 63.9(b)(2) no later than 120 days after the applicable compliance date specified in § 63.11437, or no later than 120 days after the source becomes subject to this subpart, whichever is later. The Initial Notification must include the information specified in §§ 63.9(b)(2)(i) through (iv) and may be combined with the Notification of Compliance Status required in paragraph (b) of this section.

(b) You must submit a Notification of Compliance Status required by § 63.9(h) no later than 120 days after the applicable compliance date specified in § 63.11437. In addition to the information required in § 63.9(h)(2), your notification(s) must include each compliance certification in paragraphs (b)(1) through (3) of this section that applies to you and may be combined with the Initial Notification required in paragraph (a) of this section.

(1) For each kiln firing glazed ceramic ware, you must certify that you are maintaining the peak temperature below 1540 °C (2800 °F) according to § 63.11438(a) and complying with one of the management practices in § 63.11438(a)(1) or (2).

(2) For atomized glaze spray booths, you must certify that your facility's annual wet glaze usage is above or below 227 Mg/yr (250 tpy).

(3) For atomized glaze spray booths located at a clay ceramics manufacturing facility that uses more than 227 Mg/yr (250 tpy) of wet glaze(s), you must certify that:

(i) You are operating and maintaining an APCD in accordance with § 63.11438(c)(1), and you have conducted an initial control device inspection for each wet control system and baghouse associated with an atomized glaze spray booth; or

(ii) Alternatively, you are using wet glazes containing less than 0.1 (weight) percent clay ceramics metal HAP according to § 63.11438(c)(2).

(4) For atomized glaze spray booths located at a clay ceramics manufacturing facility that uses 227 Mg/yr (250 tpy) or less of wet glaze(s), you must certify that:

(i) You are employing waste minimization practices according to § 63.11438(d)(1); or

(ii) You are complying with the requirements in § 63.11438(c)(1) or (2).

[72 FR 73197, Dec. 26, 2007, as amended at 85 FR 73920, Nov. 19, 2020]

### § 63.11442 What are the recordkeeping requirements?

(a) You must keep the records specified in paragraphs (a)(1) and (2) of this section.

(1) A copy of each notification that you submitted to comply with this subpart, including all documentation supporting any Initial Notification or Notification of Compliance Status that you submitted, according to the requirements in § 63.10(b)(2)(xiv).

(2) Records of all required measurements needed to document compliance with management practices as required in § 63.10(b)(2)(vii), including records of monitoring and inspection data required by § 63.11440.

(b) Your records must be in a form suitable and readily available for expeditious review, according to § 63.10(b)(1).

(c) As specified in § 63.10(b)(1), you must keep each record for 5 years following the date of each occurrence, measurement, maintenance, corrective action, report, or record.

(d) You must keep each record onsite for at least 2 years after the date of each occurrence, measurement, maintenance, corrective action, report, or record, according to § 63.10(b)(1). You may keep the records offsite for the remaining three years.

## OTHER REQUIREMENTS AND INFORMATION

### § 63.11443 What General Provisions apply to this subpart?

Table 1 to this subpart shows which parts of the General Provisions in §§ 63.1 through 63.16 apply to you.

### § 63.11444 What definitions apply to this subpart?

Terms used in this subpart are defined in the Clean Air Act, in § 63.2, and in this section as follows:

*Air pollution control device (APCD)* means any equipment that reduces the quantity of a pollutant that is emitted to the air. Examples of APCD currently used on glaze spray booths include, but are not limited to, wet scrubbers, fabric filters, water curtains, and water-wash systems.

*Atomization* means the conversion of a liquid into a spray or mist (i.e., collection of drops), often by passing the liquid through a nozzle.

*Clay ceramics manufacturing facility* means a plant site that manufactures pressed tile, sanitaryware, dinnerware, or pottery. For the purposes of this area source rule, the following types of facilities are not part of the regulated category: artisan potters, art studios, school and university ceramic arts programs, and any facility that uses less than 45 Mg/yr (50 tpy) of wet clay.

*Clay ceramics metal HAP* means an oxide or other compound of chromium, lead, manganese, or nickel, which were listed for Clay Ceramics Manufacturing in the Revised Area Source Category List (67 FR 70428, November 22, 2002).

*Glaze* means a coating of colored, opaque, or transparent material applied to ceramic products before firing.

*Glaze spray booth* means a type of equipment used for spraying glaze on ceramic products.

*High-volume, low-pressure (HVLP) spray equipment* means a type of air atomized spray equipment that operates at low atomizing air pressure (0.1 to 10 pounds per square inch (psi) at the air nozzle) and uses 15 to 30 cubic

feet per minute (cfm) of air to minimize the amount of overspray and bounce back.

*Kiln* means equipment used for the initial curing or firing of glaze on ceramic ware. A kiln may operate continuously or by batch process.

*Nonatomizing glaze application technique* means the application of glaze in the form of a liquid stream without atomization. Such techniques include, but are not limited to, dipping, centrifugal disc, waterfall, flow coaters, curtain coaters, silk-screening, and any direct application by roller, brush, pad, or other means facilitating direct transfer of glaze.

*Plant site* means all contiguous or adjoining property that is under common control, including properties that are separated only by a road or other public right-of-way. Common control includes properties that are owned, leased, or operated by the same entity, parent entity, subsidiary, or any combination thereof.

*Waste minimization practices* mean those procedures employed to minimize material losses and prevent unnecessary waste generation, for example, minimizing glaze overspray emissions using HVLP spray equipment (defined in this section) or similar spray equipment; minimizing HAP emissions during cleanup of spray glazing equipment; operating and maintaining spray glazing equipment according to manufacturer's instructions; and minimizing spills through careful handling of HAP-containing glaze materials.

*Water curtain* means an APCD that draws the exhaust stream through a continuous curtain of moving water to remove suspended particulate. A water curtain may also be called a drip curtain or waterfall.

*Water-wash system* means an APCD that uses a series of baffles to redirect the upward exhaust stream through a water wash chamber with downward water flow to remove suspended particulate.

### § 63.11445 Who implements and enforces this subpart?

(a) This subpart can be implemented and enforced by the U.S. EPA or a delegated authority such as your State, local, or tribal agency. If the U.S. EPA Administrator has delegated authority to your State, local, or tribal agency, then that agency has the authority to implement and enforce this subpart. You should contact your U.S. EPA Regional Office to find out if this subpart is delegated to your State, local, or tribal agency.

(b) In delegating implementation and enforcement authority of this subpart to a State, local, or tribal agency under 40 CFR part 63, subpart E, the authorities contained in paragraph (c) of this section are retained by the Administrator of the U.S. EPA and are not transferred to the State, local, or tribal agency.

(c) The authorities that will not be delegated to State, local, or tribal agencies are listed in paragraphs (c)(1) through (4) of this section.

(1) Approval of alternatives to the applicability requirements in §§ 63.11435 and 63.11436, the compliance date requirements in § 63.11437, and the management practices and equipment standards in § 63.11438.

(2) Approval of a major change to a test method under § 63.7(e)(2)(ii) and (f). A ''major change to test method'' is defined in § 63.90.

(3) Approval of a major change to monitoring under § 63.8(f). A ''major change to monitoring'' is defined in § 63.90.

(4) Approval of a major change to recordkeeping/reporting under § 63.10(f). A ''major change to recordkeeping/reporting'' is defined in § 63.90.

### §§ 63.11446–63.11447 [Reserved]

TABLE 1 TO SUBPART RRRRRR OF PART 63—APPLICABILITY OF GENERAL PROVISIONS TO SUBPART RRRRRR

As stated in § 63.11443, you must comply with the requirements of the NESHAP General Provisions (40 CFR part 63, subpart A) shown in the following table:

| Citation | Subject |
|---|---|
| 63.1(a)(1)–(a)(4), (a)(6), (a)(10)–(a)(12), (b)(1), (b)(3), (c)(1), (c)(2),[1] (c)(5), (e). | Applicability. |
| 63.2 | Definitions. |
| 63.3 | Units and Abbreviations. |
| 63.4 | Prohibited Activities and Circumvention. |
| 63.6(a), (b)(1)–(b)(5), (b)(7), (c)(1), (c)(2), (c)(5), (e)(1), (f), (g), (i), (j) | Compliance with Standards and Maintenance Requirements. |
| 63.8(a)(1), (a)(2), (b), (c)(1)(i)–(c)(1)(ii), (c)(2), (c)(3), (f) | Monitoring Requirements. |
| 63.9(a), (b)(1), (b)(2), (b)(5), (c), (d), (h)(1)–(h)(3), (h)(5), (h)(6), (i), (j) | Notification Requirements. |
| 63.10(a), (b)(1), (b)(2)(vii), (b)(2)(xiv), (b)(3), (c), (c)(1), (f) | Recordkeeping and Reporting Requirements. |
| 63.12 | State Authority and Delegations. |
| 63.13 | Addresses. |
| 63.14 | Incorporations by Reference. |
| 63.15 | Availability of Information and Confidentiality. |
| 63.16 | Performance Track Provisions. |

[1] Section 63.11435(b) of this subpart exempts area sources from the obligation to obtain title V operating permits.

## Subpart SSSSSS—National Emission Standards for Hazardous Air Pollutants for Glass Manufacturing Area Sources

SOURCE: 72 FR 73201, Dec. 26, 2007, unless otherwise noted.

APPLICABILITY AND COMPLIANCE DATES

### § 63.11448 Am I subject to this subpart?

You are subject to this subpart if you own or operate a glass manufacturing facility that is an area source of hazardous air pollutant (HAP) emissions and meets all of the criteria specified in paragraphs (a) through (c) of this section.

(a) A glass manufacturing facility is a plant site that manufactures flat glass, glass containers, or pressed and blown glass by melting a mixture of raw materials, as defined in § 63.11459, to produce molten glass and form the molten glass into sheets, containers, or other shapes.

(b) An area source of HAP emissions is any stationary source or group of stationary sources within a contiguous area under common control that does not have the potential to emit any single HAP at a rate of 9.07 megagrams per year (Mg/yr) (10 tons per year (tpy)) or more and any combination of HAP at a rate of 22.68 Mg/yr (25 tpy) or more.

(c) Your glass manufacturing facility uses one or more continuous furnaces to produce glass that contains compounds of one or more glass manufacturing metal HAP, as defined in § 63.11459, as raw materials in a glass manufacturing batch formulation.

### § 63.11449 What parts of my plant does this subpart cover?

(a) This subpart applies to each existing or new affected glass melting furnace that is located at a glass manufacturing facility and satisfies the requirements specified in paragraphs (a)(1) through (3) of this section.

(1) The furnace is a continuous furnace, as defined in § 63.11459.

(2) The furnace is charged with compounds of one or more glass manufacturing metal HAP as raw materials.

(3) The furnace is used to produce glass, which contains one or more of the glass manufacturing metal HAP as raw materials, at a rate of at least 45 Mg/yr (50 tpy).

(b) A furnace that is a research and development process unit, as defined in § 63.11459, is not an affected furnace under this subpart.

(c) An affected source is an existing source if you commenced construction or reconstruction of the affected source on or before September 20, 2007.

(d) An affected source is a new source if you commenced construction or reconstruction of the affected source after September 20, 2007.

(e) If you own or operate an area source subject to this subpart, you must obtain a permit under 40 CFR part 70 or 40 CFR part 71.

### § 63.11450 What are my compliance dates?

(a) If you have an existing affected source, you must comply with the applicable emission limits specified in

§63.11451 of this subpart no later than December 28, 2009. As specified in section 112(i)(3)(B) of the Clean Air Act and in §63.6(i)(4)(A), you may request that the Administrator or delegated authority grant an extension allowing up to 1 additional year to comply with the applicable emission limits if such additional period is necessary for the installation of emission controls.

(b) If you have a new affected source, you must comply with this subpart according to paragraphs (b)(1) and (2) of this section.

(1) If you start up your affected source on or before December 26, 2007, you must comply with the applicable emission limit specified in §63.11451 no later than December 26, 2007.

(2) If you start up your affected source after December 26, 2007, you must comply with the applicable emission limit specified in §63.11451 upon initial startup of your affected source.

(c) If you own or operate a furnace that produces glass containing one or more glass manufacturing metal HAP as raw materials at an annual rate of less than 45 Mg/yr (50 tpy), and you increase glass production for that furnace to an annual rate of at least 45 Mg/yr (50 tpy), you must comply with the applicable emission limit specified in §63.11451 within 2 years of the date on which you increased the glass production rate for the furnace to at least 45 Mg/yr (50 tpy).

(d) If you own or operate a furnace that produces glass at an annual rate of at least 45 Mg/yr (50 tpy) and is not charged with glass manufacturing metal HAP, and you begin production of a glass product that includes one or more glass manufacturing metal HAP as raw materials, and you produce at least 45 Mg/yr (50 tpy) of this glass product, you must comply with the applicable emission limit specified in §63.11451 within 2 years of the date on which you introduced production of the glass product that contains glass manufacturing metal HAP.

(e) You must meet the notification requirements in §63.11456 according to the schedule in §63.11456 and in 40 CFR part 63, subpart A. Some of the notifications must be submitted before you are required to comply with emission limits specified in this subpart.

STANDARDS, COMPLIANCE, AND MONITORING REQUIREMENTS

### §63.11451 What are the standards for new and existing sources?

If you are an owner or operator of an affected furnace, as defined in §63.11449(a), you must meet the applicable emission limit specified in Table 1 to this subpart.

### §63.11452 What are the performance test requirements for new and existing sources?

(a) If you own or operate an affected furnace that is subject to an emission limit specified in Table 1 to this subpart, you must conduct a performance test according to paragraphs (a)(1) through (3) and paragraph (b) of this section.

(1) For each affected furnace, you must conduct a performance test within 180 days after your compliance date and report the results in your Notification of Compliance Status, except as specified in paragraph (a)(2) of this section.

(2) You are not required to conduct a performance test on the affected furnace if you satisfy the conditions described in paragraphs (a)(2)(i) through (iii) of this section.

(i) You conducted a performance test on the affected furnace within the past 5 years of the compliance date using the same test methods and procedures specified in paragraph (b) of this section.

(ii) The performance test demonstrated that the affected furnace met the applicable emission limit specified in Table 1 to this subpart.

(iii) Either no process changes have been made since the test, or you can demonstrate that the results of the performance test, with or without adjustments, reliably demonstrate compliance with the applicable emission limit.

(3) If you operate multiple identical furnaces, as defined in §63.11459, that are affected furnaces, you are required to test only one of the identical furnaces if you meet the conditions specified in paragraphs (a)(3)(i) through (iii) of this section.

(i) You must conduct the performance test while the furnace is producing glass that has the greatest potential to emit the glass manufacturing metal HAP from among the glass formulations that are used in any of the identical furnaces.

(ii) You certify in your Notification of Compliance Status that the identical furnaces meet the definition of identical furnaces specified in § 63.11459.

(iii) You provide in your Notification of Compliance Status documentation that demonstrates why the tested glass formulation has the greatest potential to emit the glass manufacturing metal HAP.

(b) You must conduct each performance test according to the requirements in § 63.7 and paragraphs (b)(1) through (12) and either paragraph (b)(13) or (b)(14) of this section.

(1) Install and validate all monitoring equipment required by this subpart before conducting the performance test.

(2) You may not conduct performance tests during periods of startup, shutdown, or malfunction, as specified in § 63.7(e)(1).

(3) Conduct the test while the source is operating at the maximum production rate.

(4) Conduct at least three separate test runs with a minimum duration of 1 hour for each test run, as specified in § 63.7(e)(3).

(5) Record the test date.

(6) Identify the emission source tested.

(7) Collect and record the emission test data listed in this section for each run of the performance test.

(8) Locate all sampling sites at the outlet of the furnace control device or at the furnace stack prior to any releases to the atmosphere.

(9) Select the locations of sampling ports and the number of traverse points using Method 1 or 1A of 40 CFR part 60, appendix A–1.

(10) Measure the gas velocity and volumetric flow rate using Method 2, 2A, 2C, 2F, or 2G of 40 CFR part 60, appendices A–1 and A–2, during each test run.

(11) Conduct gas molecular weight analysis using Methods 3, 3A, or 3B of 40 CFR part 60, appendix A–2, during each test run. You may use ANSI/ASME PTC 19.10–1981, Flue and Exhaust Gas Analyses (incorporated by reference—see § 63.14) as an alternative to EPA Method 3B.

(12) Measure gas moisture content using Method 4 of 40 CFR part 60, appendix A–3, during each test run.

(13) To meet the particulate matter (PM) emission limit specified in Table 1 to this subpart, you must conduct the procedures specified in paragraphs (b)(13)(i) through (v) of this section.

(i) Measure the PM mass emission rate at the outlet of the control device or at the stack using Method 5 or 17 of 40 CFR part 60, appendices A–3 or A–6, for each test run.

(ii) Calculate the PM mass emission rate in the exhaust stream for each test run.

(iii) Measure and record the glass production rate (kilograms (tons) per hour of product) for each test run.

(iv) Calculate the production-based PM mass emission rate (g/kg (lb/ton)) for each test run using Equation 1 of this section.

$$MP = \frac{ER}{P} \qquad \text{(Equation 1)}$$

Where:

MP = Production-based PM mass emission rate, grams of PM per kilogram (pounds of PM per ton) of glass produced.

ER = PM mass emission rate measured using Methods 5 or 17 during each performance test run, grams (pounds) per hour.

P = Average glass production rate for the performance test, kilograms (tons) of glass produced per hour.

(v) Calculate the 3-hour block average production-based PM mass emission rate as the average of the production-based PM mass emission rates for each test run.

(14) To meet the metal HAP emission limit specified in Table 1 to this subpart, you must conduct the procedures specified in paragraphs (b)(14)(i) through (v) of this section.

(i) Measure the metal HAP mass emission rate at the outlet of the control device or at the stack using Method 29 of 40 CFR part 60, appendix A–8, for each test run.

(ii) Calculate the metal HAP mass emission rate in the exhaust stream for the glass manufacturing metal HAP that are added as raw materials to the

glass manufacturing formulation for each test run.

(iii) Measure and record the glass production rate (kilograms (tons) per hour of product) for each test run.

(iv) Calculate the production-based metal HAP mass emission rate (g/kg (lb/ton)) for each test run using Equation 2 of this section.

$$MPM = \frac{ERM}{P} \qquad \text{(Equation 2)}$$

Where:

MPM = Production-based metal HAP mass emission rate, grams of metal HAP per kilogram (pounds of metal HAP per ton) of glass produced.

ERM = Sum of the metal HAP mass emission rates for the glass manufacturing metal HAP that are added as raw materials to the glass manufacturing formulation and are measured using Method 29 during each performance test run, grams (pounds) per hour.

P = Average glass production rate for the performance test, kilograms (tons) of glass produced per hour.

(v) Calculate the 3-hour block average production-based metal HAP mass emission rate as the average of the production-based metal HAP mass emission rates for each test run.

### §63.11453 What are the initial compliance demonstration requirements for new and existing sources?

(a) If you own or operate an affected source, you must submit a Notification of Compliance Status in accordance with §§63.9(h) and 63.11456(b).

(b) For each existing affected furnace that is subject to the emission limits specified in Table 1 to this subpart, you must demonstrate initial compliance according to the requirements in paragraphs (b)(1) through (4) of this section.

(1) For each fabric filter that is used to meet the emission limit specified in Table 1 to this subpart, you must visually inspect the system ductwork and fabric filter unit for leaks. You must also inspect the inside of each fabric filter for structural integrity and fabric filter condition. You must record the results of the inspection and any maintenance action as required in §63.11457(a)(6).

(2) For each electrostatic precipitator (ESP) that is used to meet the emission limit specified in Table 1 to this subpart, you must verify the proper functioning of the electronic controls for corona power and rapper operation, that the corona wires are energized, and that adequate air pressure is present on the rapper manifold. You must also visually inspect the system ductwork and ESP housing unit and hopper for leaks and inspect the interior of the ESP to determine the condition and integrity of corona wires, collection plates, hopper, and air diffuser plates. You must record the results of the inspection and any maintenance action as required in §63.11457(a)(6).

(3) You must conduct each inspection specified in paragraphs (b)(1) and (2) of this section no later than 60 days after your applicable compliance date specified in §63.11450, except as specified in paragraphs (b)(3)(i) and (ii) of this section.

(i) An initial inspection of the internal components of a fabric filter is not required if an inspection has been performed within the past 12 months.

(ii) An initial inspection of the internal components of an ESP is not required if an inspection has been performed within the past 24 months.

(4) You must satisfy the applicable requirements for performance tests specified in §63.11452.

(c) For each new affected furnace that is subject to the emission limit specified in Table 1 to this subpart and is controlled with a fabric filter, you must install, operate, and maintain a bag leak detection system according to paragraphs (c)(1) through (3) of this section.

(1) Each bag leak detection system must meet the specifications and requirements in paragraphs (c)(1)(i) through (viii) of this section.

(i) The bag leak detection system must be certified by the manufacturer to be capable of detecting PM emissions at concentrations of 1 milligram per dry standard cubic meter (0.00044 grains per actual cubic foot) or less.

(ii) The bag leak detection system sensor must provide output of relative PM loadings. The owner or operator shall continuously record the output from the bag leak detection system using electronic or other means (e.g.,

using a strip chart recorder or a data logger).

(iii) The bag leak detection system must be equipped with an alarm system that will sound when the system detects an increase in relative particulate loading over the alarm set point established according to paragraph (c)(1)(iv) of this section, and the alarm must be located such that it can be heard by the appropriate plant personnel.

(iv) In the initial adjustment of the bag leak detection system, you must establish, at a minimum, the baseline output by adjusting the sensitivity (range) and the averaging period of the device, the alarm set points, and the alarm delay time.

(v) Following initial adjustment, you shall not adjust the averaging period, alarm set point, or alarm delay time without approval from the Administrator or delegated authority except as provided in paragraph (c)(1)(vi) of this section.

(vi) Once per quarter, you may adjust the sensitivity of the bag leak detection system to account for seasonal effects, including temperature and humidity, according to the procedures identified in the site-specific monitoring plan required by paragraph (c)(2) of this section.

(vii) You must install the bag leak detection sensor downstream of the fabric filter.

(viii) Where multiple detectors are required, the system's instrumentation and alarm may be shared among detectors.

(2) You must develop and submit to the Administrator or delegated authority for approval a site-specific monitoring plan for each bag leak detection system. You must operate and maintain the bag leak detection system according to the site-specific monitoring plan at all times. Each monitoring plan must describe the items in paragraphs (c)(2)(i) through (vi) of this section.

(i) Installation of the bag leak detection system;

(ii) Initial and periodic adjustment of the bag leak detection system, including how the alarm set-point will be established;

(iii) Operation of the bag leak detection system, including quality assurance procedures;

(iv) How the bag leak detection system will be maintained, including a routine maintenance schedule and spare parts inventory list;

(v) How the bag leak detection system output will be recorded and stored; and

(vi) Corrective action procedures as specified in paragraph (c)(3) of this section. In approving the site-specific monitoring plan, the Administrator or delegated authority may allow owners and operators more than 3 hours to alleviate a specific condition that causes an alarm if the owner or operator identifies in the monitoring plan this specific condition as one that could lead to an alarm, adequately explains why it is not feasible to alleviate this condition within 3 hours of the time the alarm occurs, and demonstrates that the requested time will ensure alleviation of this condition as expeditiously as practicable.

(3) For each bag leak detection system, you must initiate procedures to determine the cause of every alarm within 1 hour of the alarm. Except as provided in paragraph (c)(2)(vi) of this section, you must alleviate the cause of the alarm within 3 hours of the alarm by taking whatever corrective action(s) are necessary. Corrective actions may include, but are not limited to the following:

(i) Inspecting the fabric filter for air leaks, torn or broken bags or filter media, or any other condition that may cause an increase in PM emissions;

(ii) Sealing off defective bags or filter media;

(iii) Replacing defective bags or filter media or otherwise repairing the control device;

(iv) Sealing off a defective fabric filter compartment;

(v) Cleaning the bag leak detection system probe or otherwise repairing the bag leak detection system; or

(vi) Shutting down the process producing the PM emissions.

(d) For each new affected furnace that is subject to the emission limit specified in Table 1 to this subpart and is controlled with an ESP, you must

install, operate, and maintain according to the manufacturer's specifications, one or more continuous parameter monitoring systems (CPMS) for measuring and recording the secondary voltage and secondary electrical current to each field of the ESP according to paragraphs (d)(1) through (13) of this section.

(1) The CPMS must have an accuracy of 1 percent of the secondary voltage and secondary electrical current, or better.

(2) Your CPMS must be capable of measuring the secondary voltage and secondary electrical current over a range that extends from a value that is at least 20 percent less than the lowest value that you expect your CPMS to measure, to a value that is at least 20 percent greater than the highest value that you expect your CPMS to measure.

(3) The signal conditioner, wiring, power supply, and data acquisition and recording system of your CPMS must be compatible with the output signal of the sensors used in your CPMS.

(4) The data acquisition and recording system of your CPMS must be able to record values over the entire range specified in paragraph (d)(2) of this section.

(5) The data recording system associated with your CPMS must have a resolution of one-half of the required overall accuracy of your CPMS, as specified in paragraph (d)(1) of this section, or better.

(6) Your CPMS must be equipped with an alarm system that will sound when the system detects a decrease in secondary voltage or secondary electrical current below the alarm set point established according to paragraph (d)(7) of this section, and the alarm must be located such that it can be heard by the appropriate plant personnel.

(7) In the initial adjustment of the CPMS, you must establish, at a minimum, the baseline output by adjusting the sensitivity (range) and the averaging period of the device, the alarm set points, and the alarm delay time.

(8) You must install each sensor of the CPMS in a location that provides representative measurement of the appropriate parameter over all operating conditions, taking into account the manufacturer's guidelines.

(9) You must perform an initial calibration of your CPMS based on the procedures specified in the manufacturer's owner's manual.

(10) Your CPMS must be designed to complete a minimum of one cycle of operation for each successive 15-minute period. To have a valid hour of data, you must have at least three of four equally-spaced data values (or at least 75 percent of the total number of values if you collect more than four data values per hour) for that hour (not including startup, shutdown, malfunction, or out of control periods).

(11) You must record valid data from at least 90 percent of the hours during which the affected source or process operates.

(12) You must record the results of each inspection, calibration, initial validation, and accuracy audit.

(13) At all times, you must maintain your CPMS including, but not limited to, maintaining necessary parts for routine repairs of the CPMS.

(e) For each new affected furnace that is subject to the emission limit specified in Table 1 to this subpart and is controlled by a device other than a fabric filter or an ESP, you must prepare and submit a monitoring plan to EPA or the delegated authority for approval. Each plan must contain the information in paragraphs (e)(1) through (5) of this section.

(1) A description of the device;

(2) Test results collected in accordance with §63.11452 verifying the performance of the device for reducing PM or metal HAP to the levels required by this subpart;

(3) Operation and maintenance plan for the control device (including a preventative maintenance schedule consistent with the manufacturer's instructions for routine and long-term maintenance) and continuous monitoring system;

(4) A list of operating parameters that will be monitored to maintain continuous compliance with the applicable emission limits; and

(5) Operating parameter limits based on monitoring data collected during the performance test.

**§ 63.11454 What are the monitoring requirements for new and existing sources?**

(a) For each monitoring system required by this subpart, you must install, calibrate, operate, and maintain the monitoring system according to the manufacturer's specifications and the requirements specified in paragraphs (a)(1) through (7) of this section.

(1) You must install each sensor of your monitoring system in a location that provides representative measurement of the appropriate parameter over all operating conditions, taking into account the manufacturer's guidelines.

(2) You must perform an initial calibration of your monitoring system based on the manufacturer's recommendations.

(3) You must use a monitoring system that is designed to complete a minimum of one cycle of operation for each successive 15-minute period.

(4) For each existing affected furnace, you must record the value of the monitored parameter at least every 8 hours. The value can be recorded electronically or manually.

(5) You must record the results of each inspection, calibration, monitoring system maintenance, and corrective action taken to return the monitoring system to normal operation.

(6) At all times, you must maintain your monitoring system including, but not limited to, maintaining necessary parts for routine repairs of the system.

(7) You must perform the required monitoring whenever the affected furnace meets the conditions specified in paragraph (a)(7)(i) or (ii) of this section.

(i) The furnace is being charged with one or more of the glass manufacturing metal HAP as raw materials.

(ii) The furnace is in transition between producing glass that contains one or more of the glass metal HAP as raw materials and glass that does not contain any of the glass manufacturing metal HAP as raw materials. The transition period begins when the furnace is charged with raw materials that do not contain any of the glass manufacturing metal HAP as raw materials and ends when the furnace begins producing a saleable glass product that does not contain any of the glass manufacturing metal HAP as raw materials.

(b) For each existing furnace that is subject to the emission limit specified in Table 1 to this subpart and is controlled with an ESP, you must meet the requirements specified in paragraphs (b)(1) or (2) of this section.

(1) You must monitor the secondary voltage and secondary electrical current to each field of the ESP according to the requirements of paragraph (a) of this section, or

(2) You must submit a request for alternative monitoring, as described in paragraph (g) of this section.

(c) For each existing furnace that is subject to the emission limit specified in Table 1 to this subpart and is controlled with a fabric filter, you must meet the requirements specified in paragraphs (c)(1) or (2) of this section.

(1) You must monitor the inlet temperature to the fabric filter according to the requirements of paragraph (a) of this section, or

(2) You must submit a request for alternative monitoring, as described in paragraph (g) of this section.

(d) For each new furnace that is subject to the emission limit specified in Table 1 to this subpart and is controlled with an ESP, you must monitor the voltage and electrical current to each field of the ESP on a continuous basis using one or more CPMS according to the requirements for CPMS specified in § 63.11453(d).

(e) For each new furnace that is subject to the emission limit specified in Table 1 to this subpart and is controlled with a fabric filter, you must install and operate a bag leak detection system according to the requirements specified in § 63.11453(c).

(f) For each new or existing furnace that is subject to the emission limit specified in Table 1 to this subpart and is equipped with a control device other than an ESP or fabric filter, you must meet the requirements in § 63.8(f) and submit a request for approval of alternative monitoring methods to the Administrator no later than the submittal date for the Notification of Compliance Status, as specified in § 63.11456(b). The request must contain

the information specified in paragraphs (f)(1) through (5) of this section.

(1) Description of the alternative add-on air pollution control device (APCD).

(2) Type of monitoring device or method that will be used, including the sensor type, location, inspection procedures, quality assurance and quality control (QA/QC) measures, and data recording device.

(3) Operating parameters that will be monitored.

(4) Frequency that the operating parameter values will be measured and recorded.

(5) Procedures for inspecting the condition and operation of the control device and monitoring system.

(g) If you wish to use a monitoring method other than those specified in paragraph (b)(1) or (c)(1) of this section, you must meet the requirements in § 63.8(f) and submit a request for approval of alternative monitoring methods to the Administrator no later than the submittal date for the Notification of Compliance Status, as specified in § 63.11456(b). The request must contain the information specified in paragraphs (g)(1) through (5) of this section.

(1) Type of monitoring device or method that will be used, including the sensor type, location, inspection procedures, QA/QC measures, and data recording device.

(2) Operating parameters that will be monitored.

(3) Frequency that the operating parameter values will be measured and recorded.

(4) Procedures for inspecting the condition and operation of the monitoring system.

(5) Explanation for how the alternative monitoring method will provide assurance that the emission control device is operating properly.

### § 63.11455 What are the continuous compliance requirements for new and existing sources?

(a) You must be in compliance with the applicable emission limits in this subpart at all times, except during periods of startup, shutdown, and malfunction.

(b) You must always operate and maintain your affected source, including air pollution control and monitoring equipment, according to the provisions in § 63.6(e)(1)(i).

(c) For each affected furnace that is subject to the emission limit specified in Table 1 to this subpart, you must monitor the performance of the furnace emission control device under the conditions specified in § 63.11454(a)(7) and according to the requirements in §§ 63.6(e)(1) and 63.8(c) and paragraphs (c)(1) through (6) of this section.

(1) For each existing affected furnace that is controlled with an ESP, you must monitor the parameters specified in § 63.11454(b) in accordance with the requirements of § 63.11454(a) or as specified in your approved alternative monitoring plan.

(2) For each new affected furnace that is controlled with an ESP, you must comply with the monitoring requirements specified in § 63.11454(d) in accordance with the requirements of § 63.11454(a) or as specified in your approved alternative monitoring plan.

(3) For each existing affected furnace that is controlled with a fabric filter, you must monitor the parameter specified in § 63.11454(c) in accordance with the requirements of § 63.11454(a) or as specified in your approved alternative monitoring plan.

(4) For each new affected furnace that is controlled with a fabric filter, you must comply with the monitoring requirements specified in § 63.11454(e) in accordance with the requirements of § 63.11454(a) or as specified in your approved alternative monitoring plan.

(5) For each affected furnace that is controlled with a device other than a fabric filter or ESP, you must comply with the requirements of your approved alternative monitoring plan, as required in § 63.11454(g).

(6) For each monitoring system that is required under this subpart, you must keep the records specified in § 63.11457.

(d) Following the initial inspections, you must perform periodic inspections and maintenance of each affected furnace control device according to the requirements in paragraphs (d)(1) through (4) of this section.

(1) For each fabric filter, you must conduct inspections at least every 12 months according to paragraphs (d)(1)(i) through (iii) of this section.

(i) You must inspect the ductwork and fabric filter unit for leakage.

(ii) You must inspect the interior of the fabric filter for structural integrity and to determine the condition of the fabric filter.

(iii) If an initial inspection is not required, as specified in § 63.11453(b)(3)(i), the first inspection must not be more than 12 months from the last inspection.

(2) For each ESP, you must conduct inspections according to the requirements in paragraphs (d)(2)(i) through (iii) of this section.

(i) You must conduct visual inspections of the system ductwork, housing unit, and hopper for leaks at least every 12 months.

(ii) You must conduct inspections of the interior of the ESP to determine the condition and integrity of corona wires, collection plates, plate rappers, hopper, and air diffuser plates every 24 months.

(iii) If an initial inspection is not required, as specified in § 63.11453(b)(3)(ii), the first inspection must not be more than 24 months from the last inspection.

(3) You must record the results of each periodic inspection specified in this section in a logbook (written or electronic format), as specified in § 63.11457(c).

(4) If the results of a required inspection indicate a problem with the operation of the emission control system, you must take immediate corrective action to return the control device to normal operation according to the equipment manufacturer's specifications or instructions.

(e) For each affected furnace that is subject to the emission limit specified in Table 1 to this subpart and can meet the applicable emission limit without the use of a control device, you must demonstrate continuous compliance by satisfying the applicable recordkeeping requirements specified in § 63.11457.

NOTIFICATIONS AND RECORDS

### § 63.11456 What are the notification requirements?

(a) If you own or operate an affected furnace, as defined in § 63.11449(a), you must submit an Initial Notification in accordance with § 63.9(b) and paragraphs (a)(1) and (2) of this section by the dates specified.

(1) As specified in § 63.9(b)(2), if you start up your affected source before December 26, 2007, you must submit an Initial Notification not later than April 24, 2008 or within 120 days after your affected source becomes subject to the standard.

(2) The Initial Notification must include the information specified in § 63.9(b)(2)(i) through (iv).

(b) You must submit a Notification of Compliance Status in accordance with § 63.9(h) and the requirements in paragraphs (b)(1) and (2) of this section.

(1) If you own or operate an affected furnace and are required to conduct a performance test, you must submit a Notification of Compliance Status, including the performance test results, before the close of business on the 60th day following the completion of the performance test, according to § 60.8 or § 63.10(d)(2).

(2) If you own or operate an affected furnace and satisfy the conditions specified in § 63.11452(a)(2) and are not required to conduct a performance test, you must submit a Notification of Compliance Status, including the results of the previous performance test, before the close of business on the compliance date specified in § 63.11450.

### § 63.11457 What are the recordkeeping requirements?

(a) You must keep the records specified in paragraphs (a)(1) through (8) of this section.

(1) A copy of any Initial Notification and Notification of Compliance Status that you submitted and all documentation supporting those notifications, according to the requirements in § 63.10(b)(2)(xiv).

(2) The records specified in § 63.10(b)(2) and (c)(1) through (13).

(3) The records required to show continuous compliance with each emission limit that applies to you, as specified in § 63.11455.

(4) For each affected source, records of production rate on a process throughput basis (either feed rate to the process unit or discharge rate from the process unit). The production data must include the amount (weight or

weight percent) of each ingredient in the batch formulation, including all glass manufacturing metal HAP compounds.

(5) Records of maintenance activities and inspections performed on control devices as specified in §§63.11453(b) and 63.11455(d), according to paragraphs (a)(5)(i) through (v) of this section.

(i) The date, place, and time of inspections of control device ductwork, interior, and operation.

(ii) Person conducting the inspection.

(iii) Technique or method used to conduct the inspection.

(iv) Control device operating conditions during the time of the inspection.

(v) Results of the inspection and description of any corrective action taken.

(6) Records of all required monitoring data and supporting information including all calibration and maintenance records.

(7) For each bag leak detection system, the records specified in paragraphs (a)(7)(i) through (iii) of this section.

(i) Records of the bag leak detection system output;

(ii) Records of bag leak detection system adjustments, including the date and time of the adjustment, the initial bag leak detection system settings, and the final bag leak detection system settings; and

(iii) The date and time of all bag leak detection system alarms, the time that procedures to determine the cause of the alarm were initiated, the cause of the alarm, an explanation of the actions taken, the date and time the cause of the alarm was alleviated, and whether the alarm was alleviated within 3 hours of the alarm.

(8) Records of any approved alternative monitoring method(s) or test procedure(s).

(b) Your records must be in a form suitable and readily available for expeditious review, according to §63.10(b)(1).

(c) You must record the results of each inspection and maintenance action in a logbook (written or electronic format). You must keep the logbook onsite and make the logbook available to the permitting authority upon request.

(d) As specified in §63.10(b)(1), you must keep each record for a minimum of 5 years following the date of each occurrence, measurement, maintenance, corrective action, report, or record.

You must keep each record onsite for at least 2 years after the date of each occurrence, measurement, maintenance, corrective action, report, or record, according to §63.10(b)(1). You may keep the records offsite for the remaining three years.

OTHER REQUIREMENTS AND INFORMATION

### §63.11458 What General Provisions apply to this subpart?

You must satisfy the requirements of the General Provisions in 40 CFR part 63, subpart A, as specified in Table 2 to this subpart.

### §63.11459 What definitions apply to this subpart?

Terms used in this subpart are defined in the Clean Air Act, in §63.2, and in this section as follows:

*Air pollution control device (APCD)* means any equipment that reduces the quantity of a pollutant that is emitted to the air.

*Continuous furnace* means a glass manufacturing furnace that operates continuously except during periods of maintenance, malfunction, control device installation, reconstruction, or rebuilding.

*Cullet* means recycled glass that is mixed with raw materials and charged to a glass melting furnace to produce glass. Cullet is not considered to be a raw material for the purposes of this subpart.

*Electrostatic precipitator (ESP)* means an APCD that removes PM from an exhaust gas stream by applying an electrical charge to particles in the gas stream and collecting the charged particles on plates carrying the opposite electrical charge.

*Fabric filter* means an APCD used to capture PM by filtering a gas stream through filter media.

*Furnace stack* means a conduit or conveyance through which emissions from the furnace melter are released to the atmosphere.

*Glass manufacturing metal HAP* means an oxide or other compound of any of

the following metals included in the list of urban HAP for the Integrated Urban Air Toxics Strategy and for which Glass Manufacturing was listed as an area source category: arsenic, cadmium, chromium, lead, manganese, and nickel.

*Glass melting furnace* means a unit comprising a refractory-lined vessel in which raw materials are charged and melted at high temperature to produce molten glass.

*Identical furnaces* means two or more furnaces that are identical in design, including manufacturer, dimensions, production capacity, charging method, operating temperature, fuel type, burner configuration, and exhaust system configuration and design.

*Particulate matter (PM)* means, for purposes of this subpart, emissions of PM that serve as a measure of filterable particulate emissions, as measured by Methods 5 or 17 (40 CFR part 60, appendices A–3 and A–6), and as a surrogate for glass manufacturing metal HAP compounds contained in the PM including, but not limited to, arsenic, cadmium, chromium, lead, manganese, and nickel.

*Plant site* means all contiguous or adjoining property that is under common control, including properties that are separated only by a road or other public right-of-way. Common control includes properties that are owned, leased, or operated by the same entity, parent entity, subsidiary, or any combination thereof.

*Raw material* means minerals, such as silica sand, limestone, and dolomite; inorganic chemical compounds, such as soda ash (sodium carbonate), salt cake (sodium sulfate), and potash (potassium carbonate); metal oxides and other metal-based compounds, such as lead oxide, chromium oxide, and sodium antimonate; metal ores, such as chromite and pyrolusite; and other substances that are intentionally added to a glass manufacturing batch and melted in a glass melting furnace to produce glass. Metals that are naturally-occurring trace constituents or contaminants of other substances are not considered to be raw materials. Cullet and material that is recovered from a furnace control device for recycling into the glass formulation are not considered to be raw materials for the purposes of this subpart.

*Research and development process unit* means a process unit whose purpose is to conduct research and development for new processes and products and is not engaged in the manufacture of products for commercial sale, except in a de minimis manner.

### § 63.11460 Who implements and enforces this subpart?

(a) This subpart can be implemented and enforced by the U.S. EPA, or a delegated authority such as your State, local, or tribal agency. If the U.S. EPA Administrator has delegated authority to your State, local, or tribal agency, then that agency has the authority to implement and enforce this subpart. You should contact your U.S. EPA Regional Office to find out if this subpart is delegated to your State, local, or tribal agency.

(b) In delegating implementation and enforcement authority of this subpart to a State, local, or tribal agency under 40 CFR part 63, subpart E, the authorities contained in paragraphs (b)(1) through (4) of this section are retained by the Administrator of the U.S. EPA and are not transferred to the State, local, or tribal agency.

(1) Approval of alternatives to the applicability requirements in §§ 63.11448 and 63.11449, the compliance date requirements in § 63.11450, and the emission limits specified in § 63.11451.

(2) Approval of a major change to test methods under § 63.7(e)(2)(ii) and (f) and as defined in § 63.90.

(3) Approval of major alternatives to monitoring under § 63.8(f) and as defined in § 63.90.

(4) Approval of major alternatives to recordkeeping under § 63.10(f) and as defined in § 63.90.

### § 63.11461 [Reserved]

TABLE 1 TO SUBPART SSSSSS OF PART 63—EMISSION LIMITS

As required in §63.11451, you must comply with each emission limit that applies to you according to the following table:

| For each. . . | You must meet one of the following emission limits. . . |
|---|---|
| 1. New or existing glass melting furnace that produces glass at an annual rate of at least 45 Mg/yr (50 tpy) AND is charged with compounds of arsenic, cadmium, chromium, manganese, lead, or nickel as raw materials. | a. The 3-hour block average production-based PM mass emission rate must not exceed 0.1 gram per kilogram (g/kg) (0.2 pound per ton (lb/ton)) of glass produced; OR<br>b. The 3-hour block average production-based metal HAP mass emission rate must not exceed 0.01 g/kg (0.02 lb/ton) of glass produced. |

TABLE 2 TO SUBPART SSSSSS OF PART 63—APPLICABILITY OF GENERAL PROVISIONS TO SUBPART SSSSSS

As stated in §63.11458, you must comply with the requirements of the NESHAP General Provisions (40 CFR part 63, subpart A), as shown in the following table:

| Citation | Subject |
|---|---|
| §63.1(a), (b), (c)(1), (c)(2), (c)(5), (e) | Applicability. |
| §63.2 | Definitions. |
| §63.3 | Units and Abbreviations. |
| §63.4 | Prohibited Activities. |
| §63.5 | Construction/Reconstruction. |
| §63.6(a), (b)(1)–(b)(5), (b)(7), (c)(1), (c)(2), (c)(5), (e)(1), (f), (g), (i), (j) | Compliance with Standards and Maintenance Requirements. |
| §63.7 | Performance Testing Requirements. |
| §63.8(a)(1), (a)(2), (b), (c)(1)–(c)(4), (c)(7)(i)(B), (c)(7)(ii), (c)(8), (d), (e)(1), (e)(4), (f). | Monitoring Requirements. |
| §63.9(a), (b)(1)(i)–(b)(2)(v), (b)(5), (c), (d), (h)–(j) | Notification Requirements. |
| §63.10(a), (b)(1), (b)(2)(i)–(b)(2)(xii) | Recordkeeping and Reporting Requirements. |
| §63.10(b)(2)(xiv), (c), (f) | Documentation for Initial Notification and Notification of Compliance Status. |
| §63.12 | State Authority and Delegations. |
| §63.13 | Addresses. |
| §63.14 | Incorporations by Reference. |
| §63.15 | Availability of Information. |
| §63.16 | Performance Track Provisions. |

## Subpart TTTTTT—National Emission Standards for Hazardous Air Pollutants for Secondary Nonferrous Metals Processing Area Sources

SOURCE: 72 FR 73207, Dec. 26, 2007, unless otherwise noted.

APPLICABILITY AND COMPLIANCE DATES

### §63.11462 Am I subject to this subpart?

(a) You are subject to this subpart if you own or operate a secondary nonferrous metals processing facility (as defined in §63.11472) that is an area source of hazardous air pollutant (HAP) emissions.

(b) If you are an owner or operator of an area source subject to this subpart, you are exempt from the obligation to obtain a permit under 40 CFR part 70 or 71, provided you are not required to obtain a permit under 40 CFR 70.3(a) or 71.3(a) for a reason other than your status as an area source under this subpart. Notwithstanding the previous sentence, you must continue to comply with the provisions of this subpart applicable to area sources.

### §63.11463 What parts of my plant does this subpart cover?

(a) This subpart applies to any existing or new affected source located at a secondary nonferrous metals processing facility.

(b) The affected source includes all crushing and screening operations at a secondary zinc processing facility and all furnace melting operations located at any secondary nonferrous metals processing facilities.

(c) An affected source is existing if you commenced construction or reconstruction of the affected source on or before September 20, 2007.

(d) An affected source is new if you commenced construction or reconstruction of the affected source after September 20, 2007.

### § 63.11464 What are my compliance dates?

(a) If you have an existing affected source, you must comply with the standards no later than December 26, 2007.

(b) If you have a new affected source, you must comply with this subpart according to paragraphs (b)(1) and (b)(2) of this section.

(1) If you start up your affected source on or before December 26, 2007, you must comply with this subpart no later than December 26, 2007.

(2) If you start up your affected source after December 26, 2007, you must comply with this subpart upon initial startup of your affected source.

## STANDARDS, COMPLIANCE, AND MONITORING REQUIREMENTS

### § 63.11465 What are the standards for new and existing sources?

(a) You must route the emissions from each existing affected source through a fabric filter or baghouse that achieves a particulate matter (PM) control efficiency of at least 99.0 percent or an outlet PM concentration limit of 0.034 grams per dry standard cubic meter (g/dscm)(0.015 grains per dry standard cubic feet (gr/dscf)).

(b) You must route the emissions from each new affected source through a fabric filter or baghouse that achieves a PM control efficiency of at least 99.5 percent or an outlet PM concentration limit of 0.023 g/dscm (0.010 gr/dscf).

### § 63.11466 What are the performance test requirements for new and existing sources?

(a) Except as specified in paragraph (b) of this section, if you own or operate an existing or new affected source, you must conduct a performance test for each affected source within 180 days of your compliance date and report the results in your notification of compliance status.

(b) If you own or operate an existing affected source, you are not required to conduct a performance test if a prior performance test was conducted within the past 5 years of the compliance date using the same methods specified in paragraph (c) of this section and you meet either of the following two conditions:

(1) No process changes have been made since the test; or

(2) You demonstrate that the results of the performance test, with or without adjustments, reliably demonstrate compliance despite process changes.

(c) You must conduct each performance test according to the requirements in § 63.7 and paragraphs (c)(1) and (2) of this section.

(1) Determine the concentration of PM according to the following test methods in 40 CFR part 60, appendices:

(i) Method 1 or 1A (Appendix A–1) to select sampling port locations and the number of traverse points in each stack or duct. Sampling sites must be located at the outlet of the control device and prior to any releases to the atmosphere.

(ii) Method 2, 2A, 2C, 2F, or 2G (Appendices A–1 and A–2) to determine the volumetric flow rate of the stack gas.

(iii) Method 3, 3A, or 3B (Appendix A–2) to determine the dry molecular weight of the stack gas. You may use ANSI/ASME PTC 19.10–1981, ''Flue and Exhaust Gas Analyses'' (incorporated by reference-see § 63.14) as an alternative to EPA Method 3B.

(iv) Method 4 (Appendix A–3) to determine the moisture content of the stack gas.

(v) Method 5 or 17 (Appendix A–3) to determine the concentration of particulate matter (front half filterable catch only). Three valid test runs are needed to comprise a performance test.

(2) During the test, you must operate each emissions source within ±10 percent of its normal process rate. You must monitor and record the process rate during the test.

**§63.11467 What are the initial compliance demonstration requirements for new and existing sources?**

(a) You must demonstrate initial compliance with the applicable standards in §63.11465 by submitting a Notification of Compliance Status in accordance with §63.11469(b).

(b) You must conduct the inspection specified in paragraph (c) of this section and include the results of the inspection in the Notification of Compliance Status.

(c) For each existing and new affected source, you must conduct an initial inspection of each baghouse. You must visually inspect the system ductwork and baghouse unit for leaks. Except as specified in paragraph (e) of this section, you must also inspect the inside of each baghouse for structural integrity and fabric filter condition. You must record the results of the inspection and any maintenance action as required in §63.11470.

(d) For each installed baghouse that is in operation during the 60 days after the applicable compliance date, you must conduct the inspection specified in paragraph (c) of this section no later than 60 days after your applicable compliance date. For an installed baghouse that is not in operation during the 60 days after the applicable compliance date, you must conduct an initial inspection prior to startup of the baghouse.

(e) An initial inspection of the internal components of a baghouse is not required if an inspection has been performed within the past 12 months.

(f) If you own or operate an existing affected source and are not required to conduct a performance test under §63.11466, you must submit the Notification of Compliance Status within 120 days after the applicable compliance date specified in §63.11464.

(g) If you own or operate an existing affected source and are required to conduct a performance test under §63.11466, you must submit the Notification of Compliance Status within 60 days after completing the performance test.

**§63.11468 What are the monitoring requirements for new and existing sources?**

(a) For an existing affected source, you must demonstrate compliance by conducting the monitoring activities in paragraph (a)(1) or (a)(2) of this section:

(1) You must perform periodic inspections and maintenance of each baghouse according to the requirements in paragraphs (a)(1)(i) and (ii) of this section.

(i) You must conduct weekly visual inspections of the system ductwork for leaks.

(ii) You must conduct inspections of the interior of the baghouse for structural integrity and to determine the condition of the fabric filter every 12 months.

(2) As an alternative to the monitoring requirements in paragraph (a)(1) of this section, you may demonstrate compliance by conducting a daily 30-minute visible emissions (VE) test (i.e., no visible emissions) using EPA Method 22 (40 CFR part 60, appendix A–7).

(b) If the results of the visual inspection or VE test conducted under paragraph (a) of this section indicate a problem with the operation of the baghouse, including but not limited to air leaks, torn or broken bags or filter media, or any other condition that may cause an increase in PM emissions, you must take immediate corrective action to return the baghouse to normal operation according to the equipment manufacturer's specifications or instructions and record the corrective action taken.

(c) For each new affected source, you must install, operate, and maintain a bag leak detection system according to paragraphs (c)(1) through (3) of this section.

(1) Each bag leak detection system must meet the specifications and requirements in paragraphs (c)(1)(i) through (viii) of this section.

(i) The bag leak detection system must be certified by the manufacturer to be capable of detecting PM emissions at concentrations of 1 milligram per dry standard cubic meter (0.00044 grains per actual cubic foot) or less.

(ii) The bag leak detection system sensor must provide output of relative

PM loadings. The owner or operator shall continuously record the output from the bag leak detection system using electronic or other means (e.g., using a strip chart recorder or a data logger).

(iii) The bag leak detection system must be equipped with an alarm system that will sound when the system detects an increase in relative particulate loading over the alarm set point established according to paragraph (c)(1)(iv) of this section, and the alarm must be located such that it can be heard by the appropriate plant personnel.

(iv) In the initial adjustment of the bag leak detection system, you must establish, at a minimum, the baseline output by adjusting the sensitivity (range) and the averaging period of the device, the alarm set points, and the alarm delay time.

(v) Following initial adjustment, you shall not adjust the averaging period, alarm set point, or alarm delay time without approval from the Administrator or delegated authority except as provided in paragraph (c)(1)(vi) of this section.

(vi) Once per quarter, you may adjust the sensitivity of the bag leak detection system to account for seasonal effects, including temperature and humidity, according to the procedures identified in the site-specific monitoring plan required by paragraph (c)(2) of this section.

(vii) You must install the bag leak detection sensor downstream of the fabric filter.

(viii) Where multiple detectors are required, the system's instrumentation and alarm may be shared among detectors.

(2) You must develop and submit to the Administrator or delegated authority for approval a site-specific monitoring plan for each bag leak detection system. You must operate and maintain the bag leak detection system according to the site-specific monitoring plan at all times. Each monitoring plan must describe the items in paragraphs (c)(2)(i) through (vi) of this section.

(i) Installation of the bag leak detection system;

(ii) Initial and periodic adjustment of the bag leak detection system, including how the alarm set-point will be established;

(iii) Operation of the bag leak detection system, including quality assurance procedures;

(iv) How the bag leak detection system will be maintained, including a routine maintenance schedule and spare parts inventory list;

(v) How the bag leak detection system output will be recorded and stored; and

(vi) Corrective action procedures as specified in paragraph (c)(3) of this section. In approving the site-specific monitoring plan, the Administrator or delegated authority may allow owners and operators more than 3 hours to alleviate a specific condition that causes an alarm if the owner or operator identifies in the monitoring plan this specific condition as one that could lead to an alarm, adequately explains why it is not feasible to alleviate this condition within 3 hours of the time the alarm occurs, and demonstrates that the requested time will ensure alleviation of this condition as expeditiously as practicable.

(3) For each bag leak detection system, you must initiate procedures to determine the cause of every alarm within 1 hour of the alarm. Except as provided in paragraph (c)(2)(vi) of this section, you must alleviate the cause of the alarm within 3 hours of the alarm by taking whatever corrective action(s) are necessary. Corrective actions may include, but are not limited to the following:

(i) Inspecting the fabric filter for air leaks, torn or broken bags or filter media, or any other condition that may cause an increase in PM emissions;

(ii) Sealing off defective bags or filter media;

(iii) Replacing defective bags or filter media or otherwise repairing the control device;

(iv) Sealing off a defective fabric filter compartment;

(v) Cleaning the bag leak detection system probe or otherwise repairing the bag leak detection system; or

(vi) Shutting down the process producing the PM emissions.

### § 63.11469 What are the notification requirements?

(a) You must submit the Initial Notification required by § 63.9(b)(2) no later than 120 days after the applicable compliance date specified in § 63.11464, or no later than 120 days after the source becomes subject to this subpart, whichever is later. The Initial Notification must include the information specified in § 63.9(b)(2)(i) through (iv) and may be combined with the Notification of Compliance Status required in § 63.11467 and paragraph (b) of this section if you choose to submit both notifications within 120 days.

(b) You must submit a Notification of Compliance Status in accordance with § 63.9(h) and the requirements in paragraphs (c) and (d) of this section. In addition to the information required in §§ 63.9(h)(2), 63.11466, and 63.11467, your notification must include the following certification(s) of compliance, as applicable, and signature of a responsible official:

(1) This certification of compliance by the owner or operator of an existing affected source who is relying on a previous performance test: ''This facility complies with the control efficiency requirement [or the outlet concentration limit] in § 63.11465 based on a previous performance test in accordance with § 63.11466.''

(2) This certification of compliance by the owner or operator of any new or existing affected source: ''This facility has conducted an initial inspection of each control device according to the requirements in § 63.11467, will conduct periodic inspections and maintenance of control devices in accordance with § 63.11468, and will maintain records of each inspection and maintenance action required by § 63.11470.''

(3) This certification of compliance by the owner or operator of a new affected source: ''This facility has an approved bag leak detection system monitoring plan in accordance with § 63.11468(c)(2).''

(c) If you own or operate an affected source and are required to conduct a performance test under § 63.11466, you must submit a Notification of Compliance Status, including the performance test results, before the close of business on the 60th day following the completion of the performance test.

(d) If you own or operate an affected source and are not required to conduct a performance test under § 63.11466, you must submit a Notification of Compliance Status, including the results of the previous performance test, no later than 120 days after the applicable compliance date specified in § 63.11464.

[72 FR 73207, Dec. 26, 2007, as amended at 85 FR 73921, Nov. 19, 2020]

### § 63.11470 What are the recordkeeping requirements?

(a) You must keep the records specified in paragraphs (a)(1) and (2) of this section.

(1) As required in § 63.10(b)(2)(xiv), you must keep a copy of each notification that you submitted to comply with this subpart and all documentation supporting any Initial Notification or Notification of Compliance Status that you submitted.

(2) You must keep the records of all inspection and monitoring data required by §§ 63.11467 and 63.11468, and the information identified in paragraphs (a)(2)(i) through (a)(2)(v) for each required inspection or monitoring.

(i) The date, place, and time;

(ii) Person conducting the activity;

(iii) Technique or method used;

(iv) Operating conditions during the activity; and

(v) Results.

(b) Your records must be in a form suitable and readily available for expeditious review, according to § 63.10(b)(1).

(c) As specified in § 63.10(b)(1), you must keep each record for 5 years following the date of each recorded action.

(d) You must keep each record onsite for at least 2 years after the date of each recorded action according to § 63.10(b)(1). You may keep the records offsite for the remaining three years.

## OTHER REQUIREMENTS AND INFORMATION

### § 63.11471 What General Provisions apply to this subpart?

Table 1 to this subpart shows which parts of the General Provisions in §§ 63.1 through 63.16 apply to you.

### § 63.11472 What definitions apply to this subpart?

Terms used in this subpart are defined in the Clean Air Act, in § 63.2, and in this section as follows:

*Bag leak detection system* means a system that is capable of continuously monitoring relative particulate matter (dust loadings) in the exhaust of a baghouse to detect bag leaks and other upset conditions. A bag leak detection system includes, but is not limited to, an instrument that operates on triboelectric, light scattering, light transmittance, or other effect to continuously monitor relative particulate matter loadings.

*Furnace melting operation* means the collection of processes used to charge post-consumer nonferrous scrap material to a furnace, melt the material, and transfer the molten material to a forming medium.

*Secondary nonferrous metals processing facility* means a brass and bronze ingot making, secondary magnesium processing, or secondary zinc processing plant that uses furnace melting operations to melt post-consumer nonferrous metal scrap to make products including bars, ingots, blocks, or metal powders.

### § 63.11473 Who implements and enforces this subpart?

(a) This subpart can be implemented and enforced by the U.S. EPA or a delegated authority such as your State, local, or tribal agency. If the U.S. EPA Administrator has delegated authority to your State, local, or tribal agency, then that agency has the authority to implement and enforce this subpart. You should contact your U.S. EPA Regional Office to find out if this subpart is delegated to your State, local, or tribal agency.

(b) In delegating implementation and enforcement authority of this subpart to a State, local, or tribal agency under 40 CFR part 63, subpart E, the authorities contained in paragraph (c) of this section are retained by the Administrator of the U.S. EPA and are not transferred to the State, local, or tribal agency.

(c) The authorities that will not be delegated to State, local, or tribal agencies are listed in paragraphs (c)(1) through (4) of this section.

(1) Approval of alternatives to the applicability requirements in §§ 63.11462 and 63.11463, the compliance date requirements in § 63.11464, and the applicable standards in § 63.11465.

(2) Approval of a major change to a test method under § 63.7(e)(2)(ii) and (f). A ''major change to test method'' is defined in § 63.90.

(3) Approval of a major change to monitoring under § 63.8(f). A ''major change to monitoring'' is defined in § 63.90.

(4) Approval of a major change to recordkeeping/reporting under § 63.10(f). A ''major change to recordkeeping/reporting'' is defined in § 63.90.

### § 63.11474 [Reserved]

TABLE 1 TO SUBPART TTTTTT OF PART 63—APPLICABILITY OF GENERAL PROVISIONS TO SUBPART TTTTTT

As stated in § 63.11471, you must comply with the requirements of the NESHAP General Provisions (40 CFR part 63, subpart A) shown in the following table:

| Citation | Subject |
|---|---|
| 63.1(a)(1)–(a)(4), (a)(6), (a)(10)–(a)(12), (b)(1), (b)(3), (c)(1),[1] (c)(2), (c)(5), (e). | Applicability. |
| 63.2 | Definitions. |
| 63.3 | Units and Abbreviations. |
| 63.4 | Prohibited Activities and Circumvention. |
| 63.6(a), (b)(1)–(b)(5), (b)(7), (c)(1), (c)(2), (c)(5), (e)(1), (f), (g), (i), (j) | Compliance With Standards and Maintenance Requirements. |
| 63.7 | Performance Testing Requirements |
| 63.8(a)(1), (a)(2), (b), (c)(1)(i)–(c)(1)(ii), (c)(2), (c)(3), (f) | Monitoring Requirements. |
| 63.9(a), (b)(1), (b)(2), (b)(5), (c), (d), (h)(1)–(h)(3), (h)(5), (h)(6), (i), (j) | Notification Requirements. |
| 63.10(a), (b)(1), (b)(2)(vii), (b)(2)(xiv), (b)(3), (c), (f) | Recordkeeping and Reporting Requirements. |
| 63.12 | State Authority and Delegations. |
| 63.13 | Addresses. |

| Citation | Subject |
|---|---|
| 63.14 | Incorporations by Reference. |
| 63.15 | Availability of Information and Confidentiality. |
| 63.16 | Performance Track Provisions. |

[1] Section 63.11462(b) of this subpart exempts area sources from the obligation to obtain title V operating permits.

## Subpart UUUUUU [Reserved]

## Subpart VVVVVV—National Emission Standards for Hazardous Air Pollutants for Chemical Manufacturing Area Sources

SOURCE: 74 FR 56041, Oct. 29, 2009, unless otherwise noted.

APPLICABILITY AND COMPLIANCE DATES

### §63.11494 What are the applicability requirements and compliance dates?

(a) Except as specified in paragraph (c) of this section, you are subject to this subpart if you own or operate a chemical manufacturing process unit (CMPU) that meets the conditions specified in paragraphs (a)(1) and (2) of this section.

(1) The CMPU is located at an area source of hazardous air pollutant (HAP) emissions.

(2) HAP listed in Table 1 to this subpart (Table 1 HAP) are present in the CMPU, as specified in paragraph (a)(2)(i), (ii), (iii), or (iv) of this section.

(i) The CMPU uses as feedstock, any material that contains quinoline, manganese, and/or trivalent chromium at an individual concentration greater than 1.0 percent by weight, or any other Table 1 HAP at an individual concentration greater than 0.1 percent by weight. To determine the Table 1 HAP content of feedstocks, you may rely on formulation data provided by the manufacturer or supplier, such as the Material Safety Data Sheet (MSDS) for the material. If the concentration in an MSDS is presented as a range, use the upper bound of the range.

(ii) Quinoline is generated as byproduct and is present in the CMPU in any liquid stream (process or waste) at a concentration greater than 1.0 percent by weight.

(iii) Hydrazine and/or Table 1 organic HAP other than quinoline are generated as byproduct and are present in the CMPU in any liquid stream (process or waste), continuous process vent, or batch process vent at an individual concentration greater than 0.1 percent by weight.

(iv) Hydrazine or any Table 1 HAP is produced as a product of the CMPU.

(b) A CMPU includes all process vessels, equipment, and activities necessary to operate a chemical manufacturing process that produces a material or a family of materials described by North American Industry Classification System (NAICS) code 325. A CMPU consists of one or more unit operations and any associated recovery devices. A CMPU also includes each storage tank, transfer operation, surge control vessel, and bottoms receiver associated with the production of such NAICS code 325 materials.

(c) This subpart does not apply to the operations specified in paragraphs (c)(1) through (6) of this section.

(1) Affected sources under the following chemical manufacturing area source categories listed pursuant to Clean Air Act (CAA) section 112(c)(3) and 112(k)(3)(B)(ii) that are subject to area source standards under this part:

(i) Manufacture of Paint and Allied Products, subject to subpart CCCCCCC of this part.

(ii) Mercury Emissions from Mercury Cell Chlor-Alkali Plants, subject to subpart IIIII of this part.

(iii) Polyvinyl Chloride and Copolymers Production, subject to subpart DDDDDD of this part.

(iv) Acrylic and Modacrylic Fibers Production, subject to subpart LLLLLL of this part.

(v) Carbon Black Production, subject to subpart MMMMMM of this part.

(vi) Chemical Manufacturing Area Sources: Chromium Compounds, subject to subpart NNNNNN of this part.

(vii) Lead oxide production at Lead Acid Battery Manufacturing Facilities,

subject to subpart PPPPPP of this part.

(2) Production of the following chemical manufacturing materials described in NAICS code 325:

(i) Manufacture of radioactive elements or isotopes, radium chloride, radium luminous compounds, strontium, uranium.

(ii) Manufacture of photographic film, paper, and plate where the material is coated with or contains chemicals. This subpart does apply to the manufacture of photographic chemicals.

(iii) Fabricating operations (such as spinning or compressing a solid polymer into its end use); compounding operations (in which blending, melting, and resolidification of a solid polymer product occurs for the purpose of incorporating additives, colorants, or stabilizers); and extrusion and drawing operations (converting an already produced solid polymer into a different shape by melting or mixing the polymer and then forcing it or pulling it through an orifice to create an extruded product). An operation is subject if it involves processing with Table 1 HAP solvent or if an intended purpose of the operation is to remove residual Table 1 HAP monomer.

(iv) Manufacture of chemicals classified in NAICS code 325222, 325314, 325413, or 325998.

(3) Research and development facilities, as defined in CAA section 112(c)(7).

(4) Quality assurance/quality control laboratories.

(5) Ancillary activities, as defined in § 63.11502(b).

(6) Metal HAP in structures or existing as articles as defined in 40 CFR 372.3.

(d) This subpart applies to each new or existing affected source. The affected source is the facility-wide collection of CMPUs and each heat exchange system and wastewater system associated with a CMPU that meets the criteria specified in paragraphs (a) and (b) of this section. A CMPU using only Table 1 organic HAP is required to control only total CAA section 112(b) organic HAP. A CMPU using only Table 1 metal HAP is required to control only total CAA section 112(b) metal HAP in accordance with § 63.11495 and, if applicable, § 63.11496(f).

(1) An affected source is an existing source if you commenced construction or reconstruction of the affected source before October 6, 2008.

(2) An affected source is a new source if you commenced construction or reconstruction of the affected source on or after October 6, 2008.

(e) Any area source that installed a federally-enforceable control device on an affected CMPU is required to obtain a permit under 40 CFR part 70 or 40 CFR part 71 if the control device on the affected CMPU is necessary to maintain the source's emissions at area source levels. For new and existing sources subject to this rule on December 21, 2012 and subject to title V as a result of this rule, a complete title V permit application must be submitted no later than December 21, 2013. New and existing sources that become subject to this rule after December 21, 2012 must submit a complete title V permit application no later than 12 months after becoming subject to this rule if the source is subject to title V as a result of this rule. Otherwise, you are exempt from the obligation to obtain a permit under 40 CFR part 70 or 40 CFR part 71, provided you are not otherwise required by law to obtain a permit under 40 CFR 70.3(a) or 40 CFR 71.3(a). Notwithstanding the previous sentence, you must continue to comply with the provisions of this subpart.

(f) If you own or operate an existing affected source, you must achieve compliance with the applicable provisions in this subpart no later than March 21, 2013.

(g) If you start up a new affected source on or before October 29, 2009, you must achieve compliance with the applicable provisions of this subpart no later than October 29, 2009.

(h) If you start up a new affected source after October 29, 2009, you must achieve compliance with the provisions in this subpart upon startup of your affected source.

[74 FR 56041, Oct. 29, 2009, as amended at 77 FR 75756, Dec. 21, 2012]

STANDARDS AND COMPLIANCE REQUIREMENTS

### § 63.11495 What are the management practices and other requirements?

(a) *Management practices.* If you have a CMPU subject to this subpart, you must comply with paragraphs (a)(1) through (5) of this section.

(1) Each process vessel must be equipped with a cover or lid that must be closed at all times when it is in organic HAP service or metal HAP service, except for manual operations that require access, such as material addition and removal, inspection, sampling and cleaning. This requirement does not apply to process vessels containing only metal HAP that are in a liquid solution or other form that will not result in particulate emissions of metal HAP (e.g., metal HAP that is in ingot, paste, slurry, or moist pellet form or other form).

(2) You must use any of the methods listed in paragraphs (a)(2)(i) through (iv) of this section to control total organic HAP emissions from transfer of liquids containing Table 1 organic HAP to tank trucks or railcars. You are not required to comply with this paragraph (a)(2) if you have notified the Administrator in your initial notification that a material is reactive or resinous, and you will not be able to comply with any of the methods in paragraphs (a)(2)(i) through (iv) of this section for the transfer of such material.

(i) Use submerged loading or bottom loading.

(ii) Route emissions to a fuel gas system or process in accordance with § 63.982(d) of subpart SS.

(iii) Vapor balance back to the storage tank or another storage tank connected by a common header.

(iv) Vent through a closed-vent system to a control device.

(3) You must conduct inspections of process vessels and equipment for each CMPU in organic HAP service or metal HAP service, as specified in paragraphs (a)(3)(i) through (v) of this section, to demonstrate compliance with paragraph (a)(1) of this section and to determine that the process vessels and equipment are sound and free of leaks. Alternatively, except when the subject CMPU contains metal HAP as particulate, inspections may be conducted while the subject process vessels and equipment are in VOC service, provided that leaks can be detected when in VOC service.

(i) Inspections must be conducted at least quarterly.

(ii) For these inspections, detection methods incorporating sight, sound, or smell are acceptable. Indications of a leak identified using such methods constitute a leak unless you demonstrate that the indications of a leak are due to a condition other than loss of HAP. If indications of a leak are determined not to be HAP in one quarterly monitoring period, you must still perform the inspection and demonstration in the next quarterly monitoring period.

(iii) As an alternative to conducting inspections, as specified in paragraph (a)(3)(ii) of this section, you may use Method 21 of 40 CFR part 60, appendix A–7, with a leak definition of 500 ppmv to detect leaks. You may also use Method 21 with a leak definition of 500 ppmv to determine if indications of a leak identified during an inspection conducted in accordance with paragraph (a)(3)(ii) of this section are due to a condition other than loss of HAP. The procedures in this paragraph (a)(3)(iii) may not be used as an alternative to the inspection required by paragraph (a)(3)(ii) of this section for process vessels that contain metal HAP as particulate.

(iv) Inspections must be conducted while the subject CMPU is operating.

(v) No inspection is required in a calendar quarter during which the subject CMPU does not operate for the entire calendar quarter and is not in organic HAP service or metal HAP service. If the CMPU operates at all during a calendar quarter, an inspection is required.

(4) You must repair any leak within 15 calendar days after detection of the leak, or document the reason for any delay of repair. For the purposes of this paragraph (a)(4), a leak will be considered ''repaired'' if a condition specified in paragraph (a)(4)(i), (ii), or (iii) of this section is met.

(i) The visual, audible, olfactory, or other indications of a leak to the atmosphere have been eliminated, or

(ii) No bubbles are observed at potential leak sites during a leak check using soap solution, or

(iii) The system will hold a test pressure.

(5) You must keep records of the dates and results of each inspection event, the dates of equipment repairs, and, if applicable, the reasons for any delay in repair.

(b) *Small heat exchange systems.* For each heat exchange system subject to this subpart with a cooling water flow rate less than 8,000 gallons per minute (gal/min) and not meeting one or more of the conditions in § 63.104(a), you must comply with paragraphs (b)(1) through (3) of this section, or as an alternative, you may comply with any one of the requirements in Item 1.a or 1.b of Table 8 to this subpart.

(1) You must develop and operate in accordance with a heat exchange system inspection plan. The plan must describe the inspections to be performed that will provide evidence of hydrocarbons in the cooling water. Among other things, inspections may include checks for visible floating hydrocarbon on the water, hydrocarbon odor, discolored water, and/or chemical addition rates. You must conduct inspections at least once per quarter, even if the previous inspection determined that the indications of a leak did not constitute a leak as defined by § 63.104(b)(6).

(2) You must perform repairs to eliminate the leak and any indications of a leak or demonstrate that the HAP concentration in the cooling water does not constitute a leak, as defined by § 63.104(b)(6), within 45 calendar days after indications of the leak are identified, or you must document the reason for any delay of repair in your next semiannual compliance report.

(3) You must keep records of the dates and results of each inspection, documentation of any demonstrations that indications of a leak do not constitute a leak, the dates of leak repairs, and, if applicable, the reasons for any delay in repair.

(c) *Startup, shutdown and malfunction.* Startup, shutdown, and malfunction (SSM) provisions in subparts that are referenced in paragraphs (a) and (b) of this section do not apply.

(d) *General duty.* At all times, you must operate and maintain any affected CMPU, including associated air pollution control equipment and monitoring equipment, in a manner consistent with safety and good air pollution control practices for minimizing emissions. Determination of whether such operation and maintenance procedures are being used will be based on information available to the Administrator, which may include, but is not limited to, monitoring results, review of operation and maintenance procedures, review of operation and maintenance records, and inspection of the CMPU.

[74 FR 56041, Oct. 29, 2009, as amended at 77 FR 75756, Dec. 21, 2012]

### § 63.11496 What are the standards and compliance requirements for process vents?

(a) *Organic HAP emissions from batch process vents.* You must comply with the requirements in paragraphs (a)(1) through (4) of this section for organic HAP emissions from your batch process vents for each CMPU using Table 1 organic HAP. If uncontrolled organic HAP emissions from all batch process vents from a CMPU subject to this subpart are equal to or greater than 10,000 pounds per year (lb/yr), you must also comply with the emission limits and other requirements in Table 2 to this subpart.

(1) You must determine the sum of actual organic HAP emissions from all of your batch process vents within a CMPU subject to this subpart using process knowledge, engineering assessment, or test data. Emissions for a standard batch in a process may be used to represent actual emissions from each batch in that process. You must maintain records of the calculations. Calculations of annual emissions are not required if you meet the emission standards for batch process vents in Table 2 to this subpart.

(2) As an alternative to calculating actual emissions for each affected CMPU at your facility, you may elect to estimate emissions for each CMPU based on the emissions for the worst-case CMPU. The worst-case CMPU means the CMPU at the affected source

with the highest organic HAP emissions per batch. The worst-case emissions per batch are used with the number of batches run for other affected CMPU. Process knowledge, engineering assessment, or test data may be used to identify the worst-case process. You must keep records of the information and procedures used to identify the worst-case process.

(3) If your current estimate is that emissions from batch process vents from a CMPU are less than 10,000 pounds per year (lb/yr), then you must keep a record of the number of batches of each process operated per month. Also, you must reevaluate your total emissions from batch process vents prior to making any process changes that affect emission calculations in paragraphs (a)(1) and (2) of this section. If projected emissions increase to 10,000 lb/yr or more, you must be in compliance options for batch process vents in Table 2 to this subpart upon initiating operation under the new operating conditions. You must maintain records documenting the results of all updated emissions calculations.

(4) As an alternative to determining the HAP emissions, you may elect to demonstrate that the amount of organic HAP used in the process is less than 10,000 lb/yr. You must keep monthly records of the organic HAP usage.

(b) *Organic HAP emissions from continuous process vents.* You must comply with the requirements in paragraphs (b)(1) through (3) of this section for organic HAP emissions from your continuous process vents for each CMPU subject to this subpart using Table 1 organic HAP. If the total resource-effectiveness (TRE) index value for a continuous process vent is less than or equal to 1.0, you must also comply with the emission limits and other requirements in Table 3 to this subpart.

(1) You must determine the TRE index value according to the procedures in §63.115(d), except as specified in paragraphs (b)(1)(i) through (iii) of this section.

(i) You are not required to calculate the TRE index value if you control emissions in accordance with Table 3 to this subpart.

(ii) Sections 63.115(d)(1)(i) and (ii) are not applicable for the purposes of this paragraph (b)(1)(ii).

(iii) You may assume the TRE for a vent stream is >1.0 if the amount of organic HAP emitted in the vent stream is less than 0.1 pound per hour.

(2) If the current TRE index value is greater than 1, you must recalculate the TRE index value before you make any process or operational change that affects parameters in the calculation. If the recalculated TRE is less than or equal to 1.0, then you must comply with one of the compliance options for continuous process vents in Table 3 to this subpart before operating under the new operating conditions. You must maintain records of all TRE calculations.

(3) If a recovery device as defined in §63.11502 is used to maintain the TRE index value at a level greater than 1.0 and less than or equal to 4.0, you must comply with §63.982(e) and the requirements specified therein.

(c) *Combined streams.* If you combine organic HAP emissions from batch process vents and continuous process vents, you must comply with the more stringent standard in Table 2 or Table 3 to this subpart that applies to any portion of the combined stream, or you must comply with Table 2 for the batch process vents and Table 3 for the continuous process vents. The TRE index value for continuous process vents and the annual emissions from batch process vents shall be determined for the individual streams before they are combined, and prior to any control (e.g., by subtracting any emission contributions from storage tanks, continuous process vents or batch process vents, as applicable), in order to determine the most stringent applicable requirements.

(d) *Halogenated streams.* You must determine if an emission stream is a halogenated vent stream by calculating the mass emission rate of halogen atoms in accordance with §63.115(d)(2)(v). Alternatively, you may elect to designate the emission stream as halogenated. If you use a combustion device to comply with the emission limits for organic HAP from a halogenated batch process vent or a halogenated continuous process vent, you

must use a halogen reduction device to meet the emission limit in either paragraph (d)(1) or (d)(2) of this section and in accordance with § 63.994 and the requirements referenced therein.

(1) Reduce overall emissions of hydrogen halide and halogen HAP after the combustion device by greater than or equal to 95 percent, to less than or equal to 0.45 kilograms per hour (kg/hr), or to a concentration less than or equal to 20 parts per million by volume (ppmv).

(2) Reduce the halogen atom mass emission rate before the combustion device to less than or equal to 0.45 kg/hr or to a concentration less than or equal to 20 ppmv.

(e) *Alternative standard for organic HAP.* Exceptions to the requirements for the alternative standard requirements specified in Tables 2 and 3 to this subpart and § 63.2505 are specified in paragraphs (e)(1) through (6) of this section.

(1) When § 63.2505 of subpart FFFF refers to Tables 1 and 2 to subpart FFFF and §§ 63.2455 and 63.2460, it means Tables 2 and 3 to this subpart and § 63.11496(a) and (b).

(2) Sections 63.2505(a)(2) and (b)(9) do not apply.

(3) When § 63.2505(b) references § 63.2445 it means § 63.11494(f) through (h).

(4) The requirements for hydrogen halide and halogen HAP apply only to hydrogen halide and halogen HAP generated in a combustion device that is used to comply with the alternative standard.

(5) When § 63.1258(b)(5)(ii)(B)(*2*) refers to a ''notification of process change'' report, it means the semi-annual compliance report required by § 63.11501(d) for the purposes of this subpart.

(6) CEMS requirements and data reduction requirements for CEMS specified in § 63.2450(j) apply.

(f) *Emissions from metal HAP process vents.* You must comply with the requirements in paragraphs (f)(1) and (2) of this section for metal HAP emissions from each CMPU using Table 1 metal HAP. If the collective uncontrolled metal HAP emissions from all metal HAP process vents from a CMPU are equal to or greater than 400 lb/yr, then you must also comply with the emission limits and other requirements in Table 4 to this subpart and in paragraph (f)(3), (4), or (5) of this section. The requirements of this paragraph (f) do not apply to metal HAP process vents from CMPU containing only metal HAP that are in a liquid solution or other form that will not result in particulate emissions of metal HAP (e.g., metal HAP that is in ingot, paste, slurry, or moist pellet form or other form).

(1) You must determine the sum of metal HAP emissions from all metal HAP process vents within a CMPU subject to this subpart, except you are not required to determine the annual emissions if you control the metal HAP process vents within a CMPU in accordance with Table 4 to this subpart or if you determine your total metal HAP usage in the process unit is less than 400 lb/yr. To determine the mass emission rate you may use process knowledge, engineering assessment, or test data. You must keep records of the emissions calculations.

(2) If your current estimate is that total uncontrolled metal HAP emissions from a CMPU subject to this subpart are less than 400 lb/yr, then you must keep records of either the number of batches operated per month (batch vents) or the process operating hours (continuous vents). Also, you must reevaluate your total emissions before you make any process or operational change that affects emissions of metal HAP. If projected emissions increase to 400 lb/yr or more, then you must be in compliance with one of the options for metal HAP process vents in Table 4 to this subpart upon initiating operation under the new operating conditions. You must keep records of all recalculated emissions determinations.

(3) If you have an existing source subject to the HAP metals emission limits specified in Table 4 to this subpart, you must comply with the initial compliance and monitoring requirements in paragraphs (f)(3)(i) through (iii) of this section. You must keep records of monitoring results to demonstrate continuous compliance.

(i) You must prepare a monitoring plan containing the information in paragraphs (f)(3)(i)(A) through (E) of

this section. The plan must be maintained on-site and be available on request. You must operate and maintain the control device according to a site-specific monitoring plan at all times.

(A) A description of the device;

(B) Results of a performance test or engineering assessment conducted in accordance with paragraph (f)(3)(ii) of this section verifying the performance of the device for reducing HAP metals or particulate matter (PM) to the levels required by this subpart;

(C) Operation and maintenance plan for the control device (including a preventative maintenance schedule consistent with the manufacturer's instructions for routine and long-term maintenance) and continuous monitoring system (CMS).

(D) A list of operating parameters that will be monitored to maintain continuous compliance with the applicable emissions limits; and

(E) Operating parameter limits based on either monitoring data collected during the performance test or established in the engineering assessment.

(ii) You must conduct a performance test or an engineering assessment for each CMPU subject to a HAP metals emissions limit in Table 4 to this subpart and report the results in your Notification of Compliance Status (NOCS). Each performance test or engineering assessment must be conducted under representative operating conditions, and sampling for each performance test must be conducted at both the inlet and outlet of the control device. Upon request, you shall make available to the Administrator such records as may be necessary to determine the conditions of performance tests. If you own or operate an existing affected source, you are not required to conduct a performance test if a prior performance test was conducted within the 5 years prior to the effective date using the same methods specified in paragraph (f)(3)(iii) of this section, and, either no process changes have been made since the test, or, if you can demonstrate that the results of the performance test, with or without adjustments, reliably demonstrate compliance despite process changes.

(iii) If you elect to conduct a performance test, it must be conducted according to requirements in §63.11410(j)(1). As an alternative to conducting a performance test using Method 5 or 5D to determine the concentration of PM, you may use Method 29 in 40 CFR part 60, appendix A–8 to determine the concentration of HAP metals. You have demonstrated initial compliance if the overall reduction of either HAP metals or total PM is equal to or greater than 95 percent.

(4) If you have a new source using a baghouse as a control device, you must install, operate, and maintain a bag leak detection system on all baghouses used to comply with the HAP metals emissions limit in Table 4 to this subpart. You must comply with the testing, monitoring, and recordkeeping requirements in §63.11410(g), (i), and (j)(1), except you are not required to submit the monitoring plan required by §63.11410(g)(2) for approval.

(5) If you have a new source using a control device other than a baghouse to comply with the HAP metals emission limits in Table 4 to this subpart, you must comply with the initial compliance and monitoring requirements in paragraphs (f)(3)(i) through (iii) of this section.

(g) *Exceptions and alternatives to 40 CFR part 63, subpart SS.* If you are complying with the emission limits and other requirements for continuous process vents in Table 3 to this subpart, the provisions in paragraphs (g)(1) through (7) and (9) of this section apply in addition to the provisions in 40 CFR part 63, subpart SS. If you are complying with the emission limits and other requirements for batch process vents in Table 2 to this subpart, the provisions in paragraphs (g)(1) through (8) of this section apply in addition to the provisions in subpart SS.

(1) *Requirements for performance tests.* (i) The requirements specified in §63.2450(g)(1) through (4) apply instead of, or in addition to, the requirements specified in 40 CFR part 63, subpart SS.

(ii) Upon request, you shall make available to the Administrator, such records as may be necessary to determine the conditions of performance tests.

(2) *Design evaluation*. To determine initial compliance with a percent reduction or outlet concentration emission limit, you may elect to conduct a design evaluation as specified in § 63.1257(a)(1) instead of a performance test as specified in subpart SS of this part 63. You must establish the value(s) and basis for the operating limits as part of the design evaluation. For continuous process vents, the design evaluation must be conducted at maximum representative operating conditions for the process, unless the Administrator specifies or approves alternate operating conditions. For batch process vents, the design evaluation must be conducted under worst-case conditions, as specified in § 63.2460(c)(2).

(3) *Outlet concentration correction for combustion devices*. When § 63.997(e)(2)(iii)(C) requires you to correct the measured concentration at the outlet of a combustion device to 3 percent oxygen if you add supplemental combustion air, the requirements in either paragraph (g)(3)(i) or (g)(3)(ii) of this section apply for the purposes of this subpart.

(i) You must correct the concentration in the gas stream at the outlet of the combustion device to 3 percent oxygen if you add supplemental gases, as defined in § 63.2550, to the vent stream, or;

(ii) You must correct the measured concentration for supplemental gases using Equation 1 of § 63.2460; you may use process knowledge and representative operating data to determine the fraction of the total flow due to supplemental gas.

(4) *Continuous parameter monitoring*. The provisions in § 63.2450(k)(1) through (6) apply in addition to the requirements for continuous parameter monitoring systems (CPMS) in subpart SS of this part 63, except as specified in paragraphs (g)(4)(i) and (ii) of this section.

(i) You may measure pH or caustic strength of the scrubber effluent at least once per day for any halogen scrubber within a CMPU subject to this rule.

(ii) The requirements in § 63.2450(k)(6) to request approval of a procedure to monitor operating parameters does not apply for the purposes of this subpart. You must provide the required information in your NOCS report required by § 63.11501(b).

(5) *Startup, shutdown, malfunction (SSM)*. Sections 63.996(c)(2)(ii) and 63.998(b)(2)(iii), (b)(6)(i)(A), (c)(1)(ii)(E) and (d)(3) do not apply for the purposes of this subpart.

(6) *Excused excursions*. Excused excursions, as defined in subpart SS of this part 63, are not allowed.

(7) *Energetics and organic peroxides*. If an emission stream contains energetics or organic peroxides that, for safety reasons, cannot meet an applicable emission limit specified in this subpart, then you must submit an application to the Administrator explaining why an undue safety hazard would be created if the air emission controls were installed, and you must describe the procedures that you will implement to minimize HAP emissions from these vent streams in lieu of the emission limitations in this section.

(8) *Additional requirements for batch process vents*. The provisions specified in § 63.2460(c) apply in addition to the provisions in subpart SS of this part 63, except as specified in paragraphs (g)(8)(i) through (iii) of this section.

(i) References to emission limits in Table 2 to subpart FFFF mean the emission limits in Table 2 to this subpart.

(ii) References to MCPU mean CMPU for purposes of this subpart.

(iii) Section 63.2460(c)(8) does not apply for the purposes of this subpart.

(9) *Parameter monitoring averaging periods*. Daily averages required in § 63.998(b)(3) apply at all times except during startup and shutdown. Separate averages shall be determined for each period of startup and period of shutdown.

(h) *Surge control vessels and bottoms receivers*. For each surge control vessel and bottoms receiver that meets the applicability criteria for storage tanks specified in Table 5 to this subpart, you must meet the emission limits and control requirements specified in Table 5 to this subpart.

(i) *Startup, shutdown, and malfunction (SSM)*. References to SSM provisions in subparts that are referenced in paragraphs (a) through (h) of this section or

Tables 2 through 5 to this subpart do not apply.

[74 FR 56041, Oct. 29, 2009, as amended at 77 FR 75757, Dec. 21, 2012]

### §63.11497 What are the standards and compliance requirements for storage tanks?

(a) You must comply with the emission limits and other requirements in Table 5 to this subpart and in paragraph (b) of this section for organic HAP emissions from each of your storage tanks that meet the applicability criteria in Table 5 to this subpart.

(b) *Planned routine maintenance for a control device.* Operate in accordance with paragraphs (b)(1) through (3) of this section for periods of planned routine maintenance of a control device for storage tanks.

(1) Add no material to the storage tank during periods of planned routine maintenance.

(2) Limit periods of planned routine maintenance for each control device (or series of control devices) to no more than 240 hours per year (hr/yr), or submit an application to the Administrator requesting an extension of this time limit to a total of 360 hr/yr. The application must explain why the extension is needed and it must be submitted at least 60 days before the 240-hour limit will be exceeded.

(3) Keep records of the day and time at which planned routine maintenance periods begin and end, and keep a record of the type of maintenance performed.

(c) References to SSM provisions in subparts that are referenced in paragraphs (a) or (b) of this section or Table 5 to this subpart do not apply.

(d) *Combustion of halogenated streams.* If you use a combustion device to comply with the emission limits for organic HAP from a halogenated vent stream from a storage tank, you must reduce emissions in accordance with §63.11496(d) and the requirements referenced therein.

[74 FR 56041, Oct. 29, 2009, as amended at 77 FR 75757, Dec. 21, 2012]

### §63.11498 What are the standards and compliance requirements for wastewater systems?

(a) You must comply with the requirements in paragraph (a)(1) and (2) of this section and in Table 6, Item 1 to this subpart for all wastewater streams from a CMPU subject to this subpart. If the partially soluble HAP concentration in a wastewater stream is equal to or greater than 10,000 parts per million by weight (ppmw) and the wastewater stream contains a separate organic phase, then you must also comply with Table 6, Item 2 to this subpart for that wastewater stream. Partially soluble HAP are listed in Table 7 to this subpart.

(1) Except as specified in paragraph (a)(2) of this section, you must determine the total concentration of partially soluble HAP in each wastewater stream using process knowledge, engineering assessment, or test data. Also, you must reevaluate the concentration of partially soluble HAP if you make any process or operational change that affects the concentration of partially soluble HAP in a wastewater stream.

(2) You are not required to determine the partially soluble concentration in wastewater that is hard piped to a combustion unit or hazardous waste treatment unit, as specified in Table 6, Item 2.b to this subpart.

(3) Separated organic material that is recycled to a process is no longer wastewater and no longer subject to the wastewater requirements after it has been recycled.

(b) The requirements in Item 2 of Table 6 to this subpart do not apply during periods of startup or shutdown. References to SSM provisions in subparts that are referenced in paragraph (a) of this section or Table 6 to this subpart do not apply.

[74 FR 56041, Oct. 29, 2009, as amended at 77 FR 75757, Dec. 21, 2012]

### §63.11499 What are the standards and compliance requirements for heat exchange systems?

(a) If the cooling water flow rate in your heat exchange system is equal to or greater than 8,000 gal/min and is not meeting one or more of the conditions in §63.104(a), then you must comply

with one of the requirements specified in Table 8 to this subpart.

(b) For equipment that meets Current Good Manufacturing Practice (CGMP) requirements of 21 CFR part 211, you may use the physical integrity of the reactor as the surrogate indicator of heat exchanger system leaks when complying with Item 1.a in Table 8 to this subpart.

(c) Any reference to SSM provisions in other subparts that are referenced in paragraphs (a) and (b) of this section or Table 8 to this subpart do not apply.

### § 63.11500 What compliance options do I have if part of my plant is subject to both this subpart and another Federal standard?

For any CMPU, heat exchange system, or wastewater system subject to the provisions of both this subpart and another rule, you may elect to comply only with the more stringent provisions as specified in paragraphs (a) through (d) of this section. You must consider all provisions of the rules, including monitoring, recordkeeping, and reporting. You must identify the subject CMPU, heat exchange system, and/or wastewater system, and the provisions with which you will comply in your NOCS report required by § 63.11501(b). You also must demonstrate in your NOCS report that each provision with which you will comply is at least as stringent as the otherwise applicable requirement in this subpart VVVVVV. You are responsible for making accurate determinations concerning the more stringent standards and noncompliance with this rule is not excused if it is later determined that your determination was in error and, as a result, you are violating this subpart. Compliance with this rule is your responsibility and the NOCS report does not alter or affect that responsibility.

(a) *Compliance with other subparts of this part 63.* (1) If any part of a CMPU that is subject to the provisions of this subpart is also subject to the provisions of another subpart of 40 CFR part 63, then compliance with any of the requirements in the other subpart of this part 63 that are at least as stringent as the corresponding requirements in this subpart VVVVVV constitutes compliance with this subpart VVVVVV.

(2) After the compliance dates specified in § 63.11494, at an offsite reloading or cleaning facility subject to § 63.1253(f), as referenced from § 63.2470(e) and Table 4 to subpart VVVVVV, compliance with the monitoring, recordkeeping, and reporting provisions of any other subpart of this part 63 constitutes compliance with the monitoring, recordkeeping, and reporting provisions of § 63.1253(f)(7)(ii) or (iii). You must identify in your notification of compliance status report required by § 63.11501(b) the subpart of this part 63 with which the owner or operator of the offsite reloading or cleaning facility complies.

(b) *Compliance with subparts of 40 CFR part 60.* If any part of a CMPU that is subject to the provisions of this subpart is also subject to the provisions of subpart VV, DDD, III, NNN, RRR, or YYY in 40 CFR part 60, then compliance with any of the requirements in 40 CFR part 60, subpart VV, DDD, III, NNN, RRR, or YYY that are at least as stringent as the corresponding requirements in this subpart VVVVVV constitutes compliance with this subpart VVVVVV.

(c) *Compliance with subparts of 40 CFR part 61.* If any part of a CMPU that is subject to the provisions of this subpart is also subject to the provisions of subpart V, Y, BB, or FF of 40 CFR part 61, then compliance with any of the requirements in 40 CFR part 61, subpart V, Y, BB, or FF that are at least as stringent as the corresponding requirements in this subpart VVVVVV constitutes compliance with this subpart VVVVVV.

(d) *Compliance with 40 CFR parts 260 through 272.* If any part of a CMPU that is subject to the provisions of this subpart is also subject to the provisions of 40 CFR parts 260 through 272, then compliance with any of the requirements in 40 CFR part 260 through 272 rule that are at least as stringent as the corresponding requirements in this subpart VVVVVV constitutes compliance with this subpart VVVVVV.

[74 FR 56041, Oct. 29, 2009, as amended at 77 FR 75757, Dec. 21, 2012]

**§63.11501 What are the notification, recordkeeping, and reporting requirements, and how may I assert an affirmative defense for violation of emission standards during malfunction?**

(a) *General provisions.* You must meet the requirements of the General Provisions in 40 CFR part 63, subpart A, as shown in Table 9 to this subpart. The General Provisions in other parts do not apply except when a requirement in an overlapping standard, which you determined is at least as stringent as subpart VVVVVV and with which you have opted to comply, requires compliance with general provisions in another part.

(b) *Notification of compliance status (NOCS).* Your NOCS required by §63.9(h) must include the following additional information as applicable:

(1) This certification of compliance, signed by a responsible official:

(i) ''This facility complies with the management practices in §63.11495.''

(ii) ''This facility complies with the requirements in §63.11496 for HAP emissions from process vents.''

(iii) ''This facility complies with the requirements in §63.11496 and §63.11497 for surge control vessels, bottoms receivers, and storage tanks.''

(iv) ''This facility complies with the requirements in §63.11498 to treat wastewater streams.''

(v) ''This facility complies with the requirements in §63.11499 for heat exchange systems.''

(2) If you comply with the alternative standard as specified in Table 2 to this subpart or Table 3 to this subpart, include the information specified in §63.1258(b)(5), as applicable.

(3) If you establish an operating limit for a parameter that will not be monitored continuously in accordance with §§63.11496(g)(4) and 63.2450(k)(6), provide the information as specified in §§63.11496(g)(4) and 63.2450(k)(6).

(4) A list of all transferred liquids that are reactive or resinous materials, as defined in §63.11502(b).

(5) If you comply with provisions in an overlapping rule in accordance with §63.11500, identify the affected CMPU, heat exchange system, and/or wastewater system; provide a list of the specific provisions with which you will comply; and demonstrate that the provisions with which you will comply are at least as stringent as the otherwise applicable requirements, including monitoring, recordkeeping, and reporting requirements, in this subpart VVVVVV.

(c) *Recordkeeping.* You must maintain files of all information required by this subpart for at least 5 years following the date of each occurrence according to the requirements in §63.10(b)(1). If you are subject, you must comply with the recordkeeping and reporting requirements of §63.10(b)(2)(iii) and (vi) through (xiv), and the applicable requirements specified in paragraphs (c)(1) through (8) of this section.

(1) For each CMPU subject to this subpart, you must keep the records specified in paragraphs (c)(1)(i) through (viii) of this section.

(i) Records of management practice inspections, repairs, and reasons for any delay of repair, as specified in §63.11495(a)(5).

(ii) Records of small heat exchange system inspections, demonstrations of indications of leaks that do not constitute leaks, repairs, and reasons for any delay in repair as specified in §63.11495(b).

(iii) If batch process vent emissions are less than 10,000 lb/yr for a CMPU, records of batch process vent emission calculations, as specified in §63.11496(a)(1), the number of batches operated each month, as specified in §63.11496(a)(3), and any updated emissions calculations, as specified in §63.11496(a)(3). Alternatively, keep records of the worst-case processes or organic HAP usage, as specified in §63.11496(a)(2) and (4), respectively.

(iv) Records of all TRE calculations for continuous process vents as specified in §63.11496(b)(2).

(v) Records of metal HAP emission calculations as specified in §63.11496(f)(1) and (2). If total uncontrolled metal HAP process vent emissions from a CMPU subject to this subpart are estimated to be less than 400 lb/yr, also keep records of either the number of batches per month or operating hours, as specified in §63.11496(f)(2).

(vi) Records identifying wastewater streams and the type of treatment they

receive, as specified in Table 6 to this subpart.

(vii) Records of the date, time, and duration of each malfunction of operation of process equipment, control devices, recovery devices, or continuous monitoring systems used to comply with this subpart that causes a failure to meet a standard. The record must include a list of the affected sources or equipment, an estimate of the volume of each regulated pollutant emitted over the standard, and a description of the method used to estimate the emissions.

(viii) Records of actions taken during periods of malfunction to minimize emissions in accordance with § 63.11495(d), including corrective actions to restore malfunctioning process and air pollution control and monitoring equipment to its normal or usual manner of operation.

(2) For batch process vents subject to Table 2 to this subpart and continuous process vents subject to Table 3 to this subpart, you must keep records specified in paragraphs (c)(2)(i) or (ii) of this section, as applicable.

(i) If you route emissions to a control device other than a flare, keep records of performance tests, if applicable, as specified in § 63.998(a)(2)(ii) and (4), keep records of the monitoring system and the monitored parameters, as specified in § 63.998(b) and (c), and keep records of the closed-vent system, as specified in § 63.998(d)(1). If you use a recovery device to maintain the TRE above 1.0 for a continuous process vent, keep records of monitoring parameters during the TRE index value determination, as specified in § 63.998(a)(3).

(ii) If you route emissions to a flare, keep records of the flare compliance assessment, as specified in § 63.998(a)(1)(i), keep records of the pilot flame monitoring, as specified in § 63.998(a)(1)(ii) and (iii), and keep records of the closed-vent system, as specified in § 63.998(d)(1).

(3) For metal HAP process vents subject to Table 4 to this subpart, you must keep records specified in paragraphs (c)(3)(i) or (ii) of this section, as applicable.

(i) For a new source using a control device other than a baghouse and for any existing source, maintain a monitoring plan, as specified in § 63.11496(f)(3)(i), and keep records of monitoring results, as specified in § 63.11496(f)(3).

(ii) For a new source using a baghouse to control metal HAP emissions, keep a site-specific monitoring plan, as specified in §§ 63.11496(f)(4) and 63.11410(g), and keep records of bag leak detection systems, as specified in §§ 63.11496(f)(4) and 63.11410(g)(4).

(4) For each storage tank subject to Table 5 to this subpart, you must keep records specified in paragraphs (c)(4)(i) through (vi) of this section, as applicable.

(i) Keep records of the vessel dimensions, capacity, and liquid stored, as specified in § 63.1065(a).

(ii) Keep records of each inspection of an internal floating roof, as specified in § 63.1065(b)(1).

(iii) Keep records of each seal gap measurement for external floating roofs, as specified in § 63.1065(b)(2), and keep records of inspections of external floating roofs, as specified in § 63.1065(b)(1).

(iv) If you vent emissions to a control device other than a flare, keep records of the operating plan and measured parameter values, as specified in §§ 63.985(c) and 63.998(d)(2).

(v) If you vent emissions to a flare, keep records of all periods of operation during which the flare pilot flame is absent, as specified in §§ 63.987(c) and 63.998(a)(1), and keep records of closed-vent systems, as specified in § 63.998(d)(1).

(vi) For periods of planned routine maintenance of a control device, keep records of the day and time at which each maintenance period begins and ends, and keep records of the type of maintenance performed, as specified in § 63.11497(b)(3).

(5) For each wastewater stream subject to Item 2 in Table 6 to this subpart, keep records of the wastewater stream identification and the disposition of the organic phase(s), as specified in Item 2 to Table 6 to this subpart.

(6) For each large heat exchange system subject to Table 8 to this subpart, you must keep records of detected leaks; the date the leak was detected; if demonstrated not to be a leak, the

basis for that determination; the date of efforts to repair the leak; and the date the leak is repaired, as specified in Table 8 to this subpart.

(7) You must keep a record of all transferred liquids that are reactive or resinous materials, as defined in §63.11502(b), and not included in the NOCS.

(8) For continuous process vents subject to Table 3 to this subpart, keep records of the occurrence and duration of each startup and shutdown of operation of process equipment, or of air pollution control and monitoring equipment.

(d) *Semiannual Compliance Reports.* You must submit semiannual compliance reports that contain the information specified in paragraphs (d)(1) through (7) of this section, as applicable. Reports are required only for semiannual periods during which you experienced any of the events described in paragraphs (d)(1) through (8) of this section.

(1) *Deviations.* You must clearly identify any deviation from the requirements of this subpart.

(2) *Delay of repair for a large heat exchange system.* You must include the information specified in §63.104(f)(2) each time you invoke the delay of repair provisions for a heat exchange system with a cooling water flow rate equal to or greater than 8,000 gal/min.

(3) *Delay of leak repair.* You must provide the following information for each delay of leak repair beyond 15 days for any process equipment, storage tank, surge control vessel, bottoms receiver, and each delay of leak repair beyond 45 days for any heat exchange system with a cooling water flow rate less than 8,000 gal/min: information on the date the leak was identified, the reason for the delay in repair, and the date the leak was repaired.

(4) *Process change.* You must report each process change that affects a compliance determination and submit a new certification of compliance with the applicable requirements in accordance with the procedures specified in paragraph (b) of this section.

(5) *Data for the alternative standard.* If you comply with the alternative standard, as specified in Table 2 to this subpart or Table 3 to this subpart, report the information required in §63.1258(b)(5).

(6) *Overlapping rule requirements.* Report any changes in the overlapping provisions with which you comply.

(7) *Reactive and resinous materials.* Report any transfer of liquids that are reactive or resinous materials, as defined in §63.11502(b), and not included in the NOCS.

(8) *Malfunctions.* If a malfunction occurred during the reporting period, the report must include the number of instances of malfunctions that caused emissions in excess of a standard. For each malfunction that caused emissions in excess of a standard, the report must include a list of the affected sources or equipment, an estimate of the volume of each regulated pollutant emitted over the standard, and a description of the method used to estimate the emissions. The report must also include a description of actions you took during a malfunction of an affected source to minimize emissions in accordance with §63.11495(d), including actions taken to correct a malfunction.

(e) *Affirmative defense for violation of emission standards during malfunction.* In response to an action to enforce the standards set forth in §§63.11495 through 63.11499, you may assert an affirmative defense to a claim for civil penalties for violations of such standards that are caused by malfunction, as defined at 40 CFR 63.2. Appropriate penalties may be assessed if you fail to meet your burden of proving all of the requirements in the affirmative defense. The affirmative defense shall not available for claims for injunctive relief.

(1) To establish the affirmative defense in any action to enforce such a standard, you must timely meet the notification requirements in paragraph (e)(2) of this section, and must prove by a preponderance of evidence that:

(i) The violation:

(A) Was caused by a sudden, infrequent, and unavoidable failure of air pollution control equipment, process equipment, or a process to operate in a normal or usual manner; and

(B) Could not have been prevented through careful planning, proper design, or better operation and maintenance practices; and

(C) Did not stem from any activity or event that could have been foreseen and avoided, or planned for; and

(D) Was not part of a recurring pattern indicative of inadequate design, operation, or maintenance; and

(ii) Repairs were made as expeditiously as possible when a violation occurred. Off-shift and overtime labor were used, to the extent practicable to make these repairs; and

(iii) The frequency, amount, and duration of the violation (including any bypass) were minimized to the maximum extent practicable; and

(iv) If the violation resulted from a bypass of control equipment or a process, then the bypass was unavoidable to prevent loss of life, personal injury, or severe property damage; and

(v) All possible steps were taken to minimize the impact of the violation on ambient air quality, the environment and human health; and

(vi) All emissions monitoring and control systems were kept in operation if at all possible, consistent with safety and good air pollution control practices; and

(vii) All of the actions in response to the violation were documented by properly signed, contemporaneous operating logs; and

(viii) At all times, the affected CMPU was operated in a manner consistent with good practices for minimizing emissions; and

(ix) A written root cause analysis has been prepared, the purpose of which is to determine, correct, and eliminate the primary causes of the malfunction and the violation resulting from the malfunction event at issue. The analysis must also specify, using best monitoring methods and engineering judgment, the amount of any emissions that were the result of the malfunction.

(2) *Report*. If you seek to assert an affirmative defense, you must submit a written report to the Administrator, with all necessary supporting documentation, that you have met the requirements set forth in paragraph (e)(1) of this section. This affirmative defense report must be included in the first periodic compliance report, deviation report, or excess emission report otherwise required after the initial occurrence of the violation of the relevant standard (which may be the end of any applicable averaging period). If such compliance report, deviation report, or excess emission report is due less than 45 days after the initial occurrence of the violation, the affirmative defense report may be included in the second compliance report, deviation report, or excess emission report due after the initial occurrence of the violation of the relevant standard.

[74 FR 56041, Oct. 29, 2009, as amended at 77 FR 75758, Dec. 21, 2012]

OTHER REQUIREMENTS AND INFORMATION

### § 63.11502 What definitions apply to this subpart?

(a) The following terms used in this subpart have the meaning given them in the CAA, § 63.2, subpart SS (§ 63.981), subpart WW (§ 63.1061), 40 CFR 60.111b, subpart F (§ 63.101), subpart G (§ 63.111), subpart FFFF (§ 63.2550), as specified after each term:

Administrator (§ 63.2)
Article (40 CFR 372.3)
Batch operation (§ 63.2550)
Boiler (§ 63.111)
Bottoms receiver (§ 63.2550)
CAA (§ 63.2)
Closed-vent system (§ 63.981)
Combustion device (§ 63.111)
Commenced (§ 63.2)
Compliance date (§ 63.2)
Container (§ 63.111)
Continuous monitoring system (§ 63.2)
Continuous operation (§ 63.2550)
Control device (§ 63.111)
Distillation unit (§ 63.111)
Emission standard (§ 63.2)
EPA (§ 63.2)
Fill or filling (§ 63.111)
Floating roof (§ 63.1061)
Fuel gas system (§ 63.981)
Halogen atoms (§ 63.2550)
Halogenated vent stream (§ 63.2550)
Halogens and hydrogen halides (§ 63.2550)
Hazardous air pollutant (§ 63.2)
Heat exchange system (§ 63.101)
Incinerator (§ 63.111)
Isolated intermediate (§ 63.2550)
Maintenance wastewater (§ 63.2550)
Major source (§ 63.2)
Maximum true vapor pressure (§ 63.111)
Oil-water separator or organic-water separator (§ 63.111)
Operating permit (§ 63.101)
Owner or operator (§ 63.2)
Performance test (§ 63.2)
Permitting authority (§ 63.2)
Process condenser (§ 63.2550)

Process heater (§63.111)
Process tank (§63.2550)
Process wastewater (§63.101)
Reactor (§63.111)
Responsible official (§63.2)
State (§63.2)
Supplemental gases (§63.2550)
Surge control vessel (§63.2550)
Test method (§63.2)
Unit operation (§63.101)

(b) All other terms used in this subpart shall have the meaning given them in this section. If a term is defined in the CAA, §63.2, subpart SS (§63.981), subpart WW (§63.1061), 40 CFR 60.111b, subpart F (§63.101), subpart G (§63.111), or subpart FFFF (§63.2550), and in this section, it shall have the meaning given in this section for purposes of this subpart.

*Affirmative defense* means, in the context of an enforcement proceeding, a response or defense put forward by a defendant, regarding which the defendant has the burden of proof, and the merits of which are independently and objectively evaluated in a judicial or administrative proceeding.

*Ancillary activities* means boilers, incinerators, and process heaters not used to comply with the emission standards in §§63.11495 through 63.11500, chillers and other refrigeration systems, and other equipment and activities that are not directly involved (i.e., they operate within a closed system and materials are not combined with process fluids) in the processing of raw materials or the manufacturing of a product or intermediates used in the production of the product.

*Batch process vent* means a vent from a CMPU or vents from multiple CMPUs within a process that are manifolded together into a common header, through which a HAP-containing gas stream is, or has the potential to be, released to the atmosphere. Batch process vents include vents from batch operations and vents with intermittent flow from continuous operations that are not combined with any stream that originated as a continuous gas stream from the same continuousprocess. Examples of batch process vents include, but are not limited to, vents on condensers used for product recovery, reactors, filters, centrifuges, and process tanks. The following are not batch process vents for the purposes of this subpart:

(1) Continuous process vents;

(2) Bottoms receivers;

(3) Surge control vessels;

(4) Gaseous streams routed to a fuel gas system(s);

(5) A gas stream routed to other processes for reaction or other use in another process (i.e., for chemical value as a product, isolated intermediate, byproduct, or coproduct, or for heat value).

(6) Vents on storage tanks or wastewater systems;

(7) Drums, pails, and totes; and

(8) Emission streams from emission episodes that are undiluted and uncontrolled containing less than 50 ppmv HAP are not part of any batch process vent. The HAP concentration may be determined using any of the following: process knowledge, an engineering assessment, or test data.

*Byproduct* means a chemical (liquid, gas, or solid) that is produced coincidentally during the production of the product.

*Chemical manufacturing process* means all equipment which collectively functions to produce a product or isolated intermediate. A process includes, but is not limited to any, all, or a combination of reaction, recovery, separation, purification, or other activity, operation, manufacture, or treatment which are used to produce a product or isolated intermediate. A process is also defined by the following:

(1) All cleaning operations;

(2) Each nondedicated solvent recovery operation is considered a single process;

(3) Each nondedicated formulation operation is considered a single process;

(4) Quality assurance/quality control laboratories are not considered part of any process;

(5) Ancillary activities are not considered a process or part of any process; and

(6) The end of a process that produces a solid material is either up to and including the dryer or extruder, or for a polymer production process without a dryer or extruder, it is up to and including the die plate or solid-state reactor, except in two cases. If the dryer,

extruder, die plate, or solid-state reactor is followed by an operation that is designed and operated to remove HAP solvent or residual monomer from the solid, then the solvent removal operation is the last step in the process. If the dried solid is diluted or mixed with a HAP-based solvent, then the solvent removal operation is the last step in the process.

*Continuous process vent* means a ''process vent'' as defined in § 63.101 in subpart F of this part, except:

(1) The reference in § 63.107(e) to a chemical manufacturing process unit that meets the criteria of § 63.100(b) means a CMPU that meets the criteria of § 63.11494(a) and (b);

(2) The reference in § 63.107(h)(2) to subpart H means § 63.11495(a) for the purposes of this subpart;

(3) The reference in § 63.107(h)(4) to § 63.113 means Tables 2 and 3 to this subpart;

(4) The reference in § 63.107(h)(7) to § 63.119 means Table 5 to this subpart, and the reference to § 63.126 does not apply for the purposes of this subpart;

(5) The second sentence in the definition of ''process vent'' in § 63.101 does not apply for the purposes of this subpart;

(6) The references to an ''air oxidation reactor, distillation unit, or reactor'' in § 63.107 means any continuous operation for the purposes of this subpart;

(7) Section § 63.107(h)(8) does not apply for the purposes of this subpart; and

(8) A separate determination is required for the emissions from each CMPU, even if emission streams from two or more CMPU are combined prior to discharge to the atmosphere or to a control device.

*Co-Product* means a chemical that is produced during the production of another chemical, both for their intended production.

*Deviation* means any instance in which an affected source subject to this subpart, or an owner or operator of such a source fails to meet any requirement or obligation established by this subpart, including, but not limited to any emissions limitation or management practice; or fails to meet any term or condition that is adopted to implement an applicable requirement in this subpart and that is included in the operating permit for any affected source required to obtain such a permit.

*Engineering assessment* means, but is not limited to, the following:

(1) Previous test results provided the tests are representative of current operating practices at the process unit.

(2) Bench-scale or pilot-scale test data representative of the process under representative operating conditions.

(3) Maximum flow rate, TOC emission rate, organic HAP emission rate, metal HAP emission rate, or net heating value limit specified or implied within a permit limit applicable to the process vent.

(4) Design analysis based on accepted chemical engineering principles, measurable process parameters, or physical or chemical laws or properties. Examples of analytical methods include, but are not limited to:

(i) Use of material balances based on process stoichiometry to estimate maximum organic HAP or metal HAP concentrations;

(ii) Estimation of maximum flow rate based on physical equipment design such as pump or blower capacities;

(iii) Estimation of TOC, organic HAP, or metal HAP concentrations based on saturation conditions; or

(iv) Estimation of maximum expected net heating value based on the vent stream concentration of each organic compound or, alternatively, as if all TOC in the vent stream were the compound with the highest heating value.

(5) All data, assumptions, and procedures used in the engineering assessment shall be documented.

*Equipment* means each pump, compressor, agitator, pressure relief device, sampling connection system, open-ended valve or line, valve, connector, and instrumentation system in or associated with a CMPU.

*Family of materials* means a grouping of materials that have the same basic composition or the same basic end use or functionality; are produced using the same basic feedstocks, the same manufacturing equipment configuration and in the same sequence of steps;

and whose production results in emissions of the same Table 1 HAP at approximately the same rate per pound of product produced. Examples of families of materials include multiple grades of same product or different variations of a product (e.g., blue, black and red resins).

*Feedstock* means any raw material, reactant, solvent, additive, or other material introduced to a CMPU.

*Hazardous waste treatment*, as used in the wastewater requirements, means treatment in any of the following units:

(1) A hazardous waste incinerator for which you have been issued a final permit under 40 CFR part 270 and comply with the requirements of 40 CFR part 264, subpart O, for which you have certified compliance with the interim status requirements of 40 CFR part 265, subpart O, or for which you have submitted a Notification of Compliance under 40 CFR 63.1207(j) and comply with the requirements of 40 CFR part 63, subpart EEE at all times (including times when non-hazardous waste is being burned);

(2) A process heater or boiler for which you have been issued a final permit under 40 CFR part 270 and comply with the requirements of 40 CFR part 266, subpart H, for which you have certified compliance with the interim status requirements of 40 CFR part 266, subpart H, or for which you have submitted a Notification of Compliance under 40 CFR 63.1207(j) and comply with the requirements of 40 CFR part 63, subpart EEE at all times (including times when non-hazardous waste is being burned); or

(3) An underground injection well for which you have been issued a final permit under 40 CFR part 270 or 40 CFR part 144 and comply with the requirements of 40 CFR part 122.

*In metal HAP service* means that a process vessel or piece of equipment either contains or contacts a feedstock, byproduct, or product that contains metal HAP. A process vessel is no longer in metal HAP service after the vessel has been emptied to the extent practicable (*i.e.*, a vessel with liquid left on process vessel walls or as bottom clingage, but not in pools, due to floor irregularity, is considered completely empty) and any cleaning has been completed.

*In organic HAP service* means that a process vessel or piece of equipment either contains or contacts a feedstock, byproduct, or product that contains an organic HAP, excluding any organic HAP used in manual cleaning activities. A process vessel is no longer in organic HAP service after the vessel has been emptied to the extent practicable (*i.e.*, a vessel with liquid left on process vessel walls or as bottom clingage, but not in pools, due to floor irregularity, is considered completely empty) and any cleaning has been completed.

*In VOC service* means that a process vessel or piece of equipment either contains or contacts a fluid that contains VOC.

*Metal HAP* means the compounds containing metals listed as HAP in section 112(b) of the CAA.

*Metal HAP process vent* means the point of discharge to the atmosphere (or inlet to a control device, if any) of a metal HAP-containing gas stream from any CMPU at an affected source containing at least 50 ppmv metal HAP. The metal HAP concentration may be determined using any of the following: process knowledge, an engineering assessment, or test data.

*Organic HAP* means any organic HAP listed in section 112(b) of the CAA. For the purposes of requirements in this subpart VVVVVV, hydrazine is to be considered an organic HAP.

*Point of determination* means ''point of determination'' as defined in §63.111 in subpart G of this part, except:

(1) The reference to Table 8 or Table 9 compounds means Table 9 (subpart G) or Table 7 (subpart VVVVVV) compounds;

(2) The reference to ''as determined in §63.144 of this subpart'' does not apply for the purposes of this subpart; and

(3) The point of determination is made at the point where the stream exits the CMPU. If a recovery device is used, the point of determination is after the last recovery device.

*Process vessel* means each vessel, except hand-held containers, used in the processing of raw materials to chemical products. Examples include, but are not limited to reactors, distillation

units, centrifuges, mixing vessels, and process tanks.

*Product* means a compound or chemical which is manufactured as the intended product of the CMPU. Products include co-products. By-products, impurities, wastes, and trace contaminants are not considered products.

*Reactive material* means energetics, organic peroxides, and unstable chemicals such as chemicals that react violently with water and chemicals that vigorously polymerize, decompose, or become self-reactive under conditions of pressure or temperature.

*Recovery device* means an individual unit of equipment capable of and normally used for the purpose of recovering organic chemicals or metal-containing chemicals for fuel value (i.e., net positive heating value), use, reuse, or for sale for fuel value, use, or reuse. Examples of equipment that may be recovery devices include absorbers, carbon adsorbers, condensers, oil-water separators or organic-water separators, or organic removal devices such as decanters, strippers, or thin-film evaporation units.

*Resinous material* means a viscous, high-boiling point material resembling pitch or tar, such as plastic resin, that sticks to or hardens in the fill pipe under normal transfer conditions.

*Shutdown*, for a unit operation with a continuous process vent, means the cessation of the unit operation for any purpose. Shutdown begins with the initiation of steps as described in a written standard operating procedures (SOP) or shutdown plan to cease normal/stable operation (e.g., reducing or immediately stopping feed).

*Startup*, for a unit operation with a continuous process vent, means the setting in operation of the unit for any purpose. The period of startup ends upon completion of the transient, non-equilibrium step at the time operating conditions reach steady state for operating parameters such as temperature, pressure, composition, feed rate, and production rate. Periods of startup described by SOP manuals at the affected source may be used to determine the period of startup.

*Storage tank* means a tank or other vessel that is used to store liquids that contain organic HAP and that are part of a CMPU subject to this subpart VVVVVV. The following are not considered storage tanks for the purposes of this subpart:

(1) Vessels permanently attached to motor vehicles such as trucks, railcars, barges, or ships;

(2) Pressure vessels designed to operate in excess of 204.9 kilopascals (kPa) and without emissions to the atmosphere;

(3) Process tanks;

(4) Tanks storing organic liquids containing HAP only as impurities;

(5) Surge control vessels;

(6) Bottoms receivers; and

(7) Wastewater storage tanks.

*Transfer operations* means all product loading into tank trucks and rail cars of liquid containing organic HAP from a transfer rack. Transfer operations do not include the loading to other types of containers such as cans, drums, and totes.

*Transfer rack* means the system used to load organic liquids into tank trucks and railcars at a single geographic site. It includes all loading arms, pumps, meters, shutoff valves, relief valves, and other piping and equipment necessary for the transfer operation. Transfer equipment that are physically separate (i.e., do not share common piping, valves, and other equipment) are considered to be separate transfer racks.

*Uncontrolled emissions* means organic HAP process vent emissions or metal HAP process vent emissions, as applicable, at the outlet of the last recovery device, if any, and prior to any control device. In the absence of both recovery devices and control devices, uncontrolled emissions are the emissions discharged to the atmosphere.

*Wastewater* means water that is discarded from a CMPU or control device and that contains at least 5 ppmw of any HAP listed in Table 9 to 40 CFR part 63, subpart G and has an annual average flow rate of 0.02 liters per minute. Wastewater means both process wastewater and maintenance wastewater that is discarded from a CMPU or control device. The following are not considered wastewater for the purposes of this subpart:

(1) Stormwater from segregated sewers;

(2) Water from fire-fighting and deluge systems, including testing of such systems;

(3) Spills;

(4) Water from safety showers;

(5) Samples of a size not greater than reasonably necessary for the method of analysis that is used;

(6) Equipment leaks;

(7) Wastewater drips from procedures such as disconnecting hoses after cleaning lines; and

(8) Noncontact cooling water.

*Wastewater stream* means a single point discharge of wastewater from a CMPU or control device.

*Wastewater treatment* means chemical, biological, and mechanical procedures applied to wastewater to remove or reduce HAP or other chemical constituents.

[74 FR 56041, Oct. 29, 2009, as amended at 77 FR 75759, Dec. 21, 2012]

### § 63.11503 Who implements and enforces this subpart?

(a) This subpart can be implemented and enforced by the U.S. EPA or a delegated authority such as a State, local, or tribal agency. If the U.S. EPA Administrator has delegated authority to a State, local, or tribal agency pursuant to 40 CFR part 63, subpart E, then that Agency has the authority to implement and enforce this subpart. You should contact your U.S. EPA Regional Office to find out if this subpart is delegated to a State, local, or tribal agency within your State.

(b) In delegating implementation and enforcement authority of this subpart to a State, local, or tribal agency under 40 CFR part 63, subpart E, the approval authorities contained in paragraphs (b)(1) through (4) of this section are retained by the Administrator of the U.S. EPA and are not transferred to the State, local, or tribal agency.

(1) Approval of an alternative nonopacity emissions standard under § 63.6(g).

(2) Approval of a major change to a test method. A ''major change to test method'' is defined in § 63.90.

(3) Approval of a major change to monitoring under § 63.8(f). A ''major change to monitoring'' is defined in § 63.90.

(4) Approval of a major change to recordkeeping/reporting under § 63.10(f). A ''major change to recordkeeping/reporting'' is defined in § 63.90.

TABLE 1 TO SUBPART VVVVVV OF PART 63—HAZARDOUS AIR POLLUTANTS USED TO DETERMINE APPLICABILITY OF CHEMICAL MANUFACTURING OPERATIONS

As required in § 63.11494(a), chemical manufacturing operations that process, use, or produce the HAP shown in the following table are subject to subpart VVVVVV.

| Type of HAP | Chemical name | CAS No. |
|---|---|---|
| 1. Organic compounds | a. 1,3-butadiene | 106990 |
| | b. 1,3-dichloropropene | 542756 |
| | c. Acetaldehyde | 75070 |
| | d. Chloroform | 67663 |
| | e. Ethylene dichloride | 107062 |
| | f. Hexachlorobenzene | 118741 |
| | g. Methylene chloride | 75092 |
| | h. Quinoline | 91225 |
| 2. Metal compounds | a. Arsenic compounds. | |
| | b. Cadmium compounds. | |
| | c. Chromium compounds. | |
| | d. Lead compounds. | |
| | e. Manganese compounds. | |
| | f. Nickel compounds. | |
| 3. Others | a. Hydrazine | 302012 |

TABLE 2 TO SUBPART VVVVVV OF PART 63—EMISSION LIMITS AND COMPLIANCE REQUIREMENTS FOR BATCH PROCESS VENTS

As required in § 63.11496, you must comply with the requirements for batch process vents as shown in the following table.

| For * * * | You must * * * | Except * * * |
|---|---|---|
| 1. Batch process vents in a CMPU at an existing source for which the total organic HAP emissions are equal to or greater than 10,000 lb/yr. | a. Reduce collective uncontrolled total organic HAP emissions from the sum of all batch process vents by ≥85 percent by weight or to ≤20 ppmv by routing emissions from a sufficient number of the batch process vents through a closed vent system to any combination of control devices (except a flare) in accordance with the requirements of § 63.982(c) and the requirements referenced therein; or | i. Compliance may be based on either total organic HAP or total organic carbon (TOC); and<br>ii. As specified in § 63.11496(g). |
| | b. Route emissions from batch process vents containing at least 85 percent of the uncontrolled total organic HAP through a closed-vent system to a flare (except that a flare may not be used to control halogenated vent streams) in accordance with the requirements of § 63.982(b) and the requirements referenced therein; or | i. Not applicable. |
| | c. Comply with the alternative standard specified in § 63.2505 and the requirements referenced therein; or | i. As specified in § 63.11496(e) of this subpart. |
| | d. Comply with combinations of the requirements in Items a., b., and c. of this Table for different groups of batch process vents. | i. The information specified above for Items a., b., and c., as applicable. |
| 2. Batch process vents in a CMPU at a new source for which the total organic HAP emissions are equal to or greater than 10,000 lb/yr. | a. Comply with any of the emission limits in Items 1.a through 1.d of this Table, except 90 percent reduction applies instead of 85 percent reduction in Item 1.a, and 90 percent of the emissions must be routed to a flare instead of 85 percent in Item 1.b. | i. The information specified above for Items 1.a., 1.b., 1.c., and 1.d, as applicable. |
| 3. Halogenated batch process vent stream at a new or existing source that is controlled through combustion. | a. Comply with the requirements for halogen scrubbers in § 63.11496(d). | |

## Table 3 to Subpart VVVVVV of Part 63—Emission Limits and Compliance Requirements for Continuous Process Vents

[As required in § 63.11496, you must comply with the requirements for continuous process vents as shown in the following table]

| For . . . | You must . . . | Except . . . |
|---|---|---|
| 1. Each continuous process vent with a TRE ≤1.0 | a. Reduce emissions of total organic HAP by ≥95 percent by weight (≥85 percent by weight for periods of start-up or shutdown) or to ≤20 ppmv by routing emissions through a closed vent system to any combination of control devices (except a flare) in accordance with the requirements of § 63.982(c) and the requirements referenced therein; or | i. Compliance may be based on either total organic HAP or TOC; and<br>ii. As specified in § 63.11496(g). |
| | b. Reduce emissions of total organic by HAP by routing all emissions through a closed-vent system to a flare (except that a flare may not be used to control halogenated vent streams) in accordance with the requirements of § 63.982(b) and the requirements referenced therein, or | i. Not applicable. |
| | c. Comply with the alternative standard specified in § 63.2505 and the requirements referenced therein | i. As specified in § 63.11496(e). |
| 2. Halogenated vent stream that is controlled through combustion | a. Comply with the requirements for halogen scrubbers in § 63.11496(d). | |

[As required in § 63.11496, you must comply with the requirements for continuous process vents as shown in the following table]

| For . . . | You must . . . | Except . . . |
|---|---|---|
| 3. Each continuous process vent with a TRE >1.0 but ≤4.0 | a. Comply with the requirements of § 63.982(e) and the requirements specified therein if a recovery device, as defined in § 63.11502, is used to maintain a TRE >1.0 but ≤4.0. | |

[77 FR 75760, Dec. 21, 2012]

## TABLE 4 TO SUBPART VVVVVV OF PART 63—EMISSION LIMITS AND COMPLIANCE REQUIREMENTS FOR METAL HAP PROCESS VENTS

As required in § 63.11496(f), you must comply with the requirements for metal HAP process vents as shown in the following table.

| For * * * | You must * * * | Except * * * |
|---|---|---|
| Each CMPU with total metal HAP emissions ≥400 lb/yr. | Reduce collective uncontrolled emissions of total metal HAP emissions by ≥95 percent by weight by routing emissions from a sufficient number of the metal process vents through a closed-vent system to any combination of control devices, according to the requirements of § 63.11496(f)(3), (4), or (5). | Not applicable. |

## TABLE 5 TO SUBPART VVVVVV OF PART 63—EMISSION LIMITS AND COMPLIANCE REQUIREMENTS FOR STORAGE TANKS

As required in § 63.11497, you must comply with the requirements for storage tanks as shown in the following table.

| For each * * * | You must * * * | Except * * * |
|---|---|---|
| 1. Storage tank with a design capacity ≥40,000 gallons, storing liquid that contains organic HAP listed in Table 1 to this subpart, and for which the maximum true vapor pressure (MTVP) of total organic HAP at the storage temperature is ≥5.2 kPa and <76.6 kPa.. | a. Comply with the requirements of subpart WW of this part; | i. All required seals must be installed by the compliance date in § 63.11494. |
| | b. Reduce total organic HAP emissions by ≥95 percent by weight by operating and maintaining a closed-vent system and control device (other than a flare) in accordance with § 63.982(c); or | i. Compliance may be based on either total organic HAP or TOC;<br>ii. When the term storage vessel is used in subpart SS of this part, the term storage tank, surge control vessel, or bottoms receiver, as defined in § 63.11502 of this subpart, applies; and<br>iii. The requirements do not apply during periods of planned routine maintenance of the control device, as specified in § 63.11497(b). |
| | c. Reduce total HAP emissions by operating and maintaining a closed-vent system and a flare in accordance with § 63.982(b); or | i. The requirements do not apply during periods of planned routine maintenance of the flare, as specified in § 63.11497(b); and<br>ii. When the term storage vessel is used in subpart SS of this part, it means storage tank, surge control vessel, or bottoms receiver, as defined in § 63.11502 of this subpart. |

| For each * * * | You must * * * | Except * * * |
|---|---|---|
| | d. Vapor balance in accordance with § 63.2470(e); or | i. To comply with § 63.1253(f)(6)(i), the owner or operator of an offsite cleaning or reloading facility must comply with § 63.11494 and § 63.11502 instead of complying with § 63.1253(f)(7)(ii), except as specified in item 1.d.ii and 1.2.iii of this table.<br>ii. The reporting requirements in § 63.11501 do not apply to the owner or operator of the offsite cleaning or reloading facility.<br>iii. As an alternative to complying with the monitoring, recordkeeping, and reporting provisions in §§ 63.11494 through 63.11502, the owner or operator of an offsite cleaning or reloading facility may comply as specified in § 63.11500 with any other subpart of this part 63 which has monitoring, recordkeeping, and reporting provisions as specified in § 63.11500. |
| | e. Route emissions to a fuel gas system or process in accordance with the requirements in § 63.982(d) and the requirements referenced therein. | i. When the term storage vessel is used in subpart SS of this part, it means storage tank, surge control vessel, or bottoms receiver, as defined in § 63.11502. |
| 2. Storage tank with a design capacity ≥20,000 gallons and <40,000 gallons, storing liquid that contains organic HAP listed in Table 1 to this subpart, and for which the MTVP of total organic HAP at the storage temperature is ≥27.6 kPa and <76.6 kPa. | a. Comply with one of the options in Item 1 of this table. | i. The information specified above for Items 1.a., 1.b., 1.c., 1.d, and 1.e, as applicable. |
| 3. Storage tank with a design capacity ≥20,000 gallons, storing liquid that contains organic HAP listed in Table 1 to this subpart, and for which the MTVP of total organic HAP at the storage temperature is ≥76.6 kPa. | a. Comply with option b, c, d, or e in Item 1 of this table. | i. The information specified above for Items 1.b., 1.c., 1.d, and 1.e, as applicable. |
| 4. Storage tank described by Item 1, 2, or 3 in this table and emitting a halogenated vent stream that is controlled with a combustion device. | a. Reduce emissions of hydrogen halide and halogen HAP by ≥95 percent by weight, or to ≤0.45 kg/hr, or to ≤20 ppmv by using a halogen reduction device after the combustion device according to the requirements in § 63.11496(d); or<br>b. Reduce the halogen atom mass emission rate to ≤0.45 kg/hr or to ≤20 ppmv by using a halogen reduction device before the combustion device according to the requirements in § 63.11496(d). | |

[74 FR 56041, Oct. 29, 2009, as amended at 77 FR 75760, Dec. 21, 2012]

## TABLE 6 TO SUBPART VVVVVV OF PART 63—EMISSION LIMITS AND COMPLIANCE REQUIREMENTS FOR WASTEWATER SYSTEMS

[As required in § 63.11498, you must comply with the requirements for wastewater systems as shown in the following table]

| For each . . . | You must . . . | And you must . . . |
|---|---|---|
| 1. Wastewater stream ..... | a. Discharge to onsite or offsite wastewater treatment or hazardous waste treatment | i. Maintain records identifying each wastewater stream and documenting the type of treatment that it receives. Multiple wastewater streams with similar characteristics and from the same type of activity in a CMPU may be grouped together for recordkeeping purposes. |

[As required in § 63.11498, you must comply with the requirements for wastewater systems as shown in the following table]

| For each . . . | You must . . . | And you must . . . |
|---|---|---|
| 2. Wastewater stream containing partially soluble HAP at a concentration ≥10,000 ppmw and separate organic and water phases. | a. Use a decanter, steam stripper, thin film evaporator, or distillation unit to separate the water phase from the organic phase(s); or | i. For the water phase, comply with the requirements in Item 1 of this table, and<br>ii. For the organic phase(s), recycle to a process, use as fuel, or dispose as hazardous waste either onsite or off-site, and<br>iii. Keep records of the wastewater streams subject to this requirement and the disposition of the organic phase(s). |
| | b. Hard pipe the entire wastewater stream to onsite treatment as a hazardous waste, or hard pipe the entire wastewater stream to a point of transfer to onsite or offsite hazardous waste treatment. | i. Keep records of the wastewater streams subject to this requirement and the disposition of the wastewater streams. |

[77 FR 75761, Dec. 21, 2012]

## Table 7 to Subpart VVVVVV of Part 63—Partially Soluble HAP

As required in § 63.11498(a), you must comply with emission limits for wastewater streams that contain the partially soluble HAP listed in the following table.

| Partially soluble HAP name | CAS No. |
|---|---|
| 1. 1,1,1-Trichloroethane (methyl chloroform) | 71556 |
| 2. 1,1,2,2-Tetrachloroethane | 79345 |
| 3. 1,1,2-Trichloroethane | 79005 |
| 4. 1,1-Dichloroethylene (vinylidene chloride) | 75354 |
| 5. 1,2-Dibromoethane | 106934 |
| 6. 1,2-Dichloroethane (ethylene dichloride) | 107062 |
| 7. 1,2-Dichloropropane | 78875 |
| 8. 1,3-Dichloropropene | 542756 |
| 9. 2,4,5-Trichlorophenol | 95954 |
| 10. 1,4-Dichlorobenzene | 106467 |
| 11. 2-Nitropropane | 79469 |
| 12. 4-Methyl-2-pentanone (MIBK) | 108101 |
| 13. Acetaldehyde | 75070 |
| 14. Acrolein | 107028 |
| 15. Acrylonitrile | 107131 |
| 16. Allyl chloride | 107051 |
| 17. Benzene | 71432 |
| 18. Benzyl chloride | 100447 |
| 19. Biphenyl | 92524 |
| 20. Bromoform (tribromomethane) | 75252 |
| 21. Bromomethane | 74839 |
| 22. Butadiene | 106990 |
| 23. Carbon disulfide | 75150 |
| 24. Chlorobenzene | 108907 |
| 25. Chloroethane (ethyl chloride) | 75003 |
| 26. Chloroform | 67663 |
| 27. Chloromethane | 74873 |
| 28. Chloroprene | 126998 |
| 29. Cumene | 98828 |
| 30. Dichloroethyl ether | 111444 |
| 31. Dinitrophenol | 51285 |
| 32. Epichlorohydrin | 106898 |
| 33. Ethyl acrylate | 140885 |
| 34. Ethylbenzene | 100414 |
| 35. Ethylene oxide | 75218 |
| 36. Ethylidene dichloride | 75343 |
| 37. Hexachlorobenzene | 118741 |
| 38. Hexachlorobutadiene | 87683 |
| 39. Hexachloroethane | 67721 |
| 40. Methyl methacrylate | 80626 |
| 41. Methyl-t-butyl ether | 1634044 |
| 42. Methylene chloride | 75092 |
| 43. N-hexane | 110543 |
| 44. N,N-dimethylaniline | 121697 |
| 45. Naphthalene | 91203 |
| 46. Phosgene | 75445 |
| 47. Propionaldehyde | 123386 |
| 48. Propylene oxide | 75569 |
| 49. Styrene | 100425 |
| 50. Tetrachloroethylene (per- chloroethylene) | 127184 |
| 51. Tetrachloromethane (carbon tetrachloride) | 56235 |
| 52. Toluene | 108883 |
| 53. Trichlorobenzene (1,2,4-) | 120821 |
| 54. Trichloroethylene | 79016 |
| 55. Trimethylpentane | 540841 |
| 56. Vinyl acetate | 108054 |
| 57. Vinyl chloride | 75014 |
| 58. Xylene (m) | 108383 |
| 59. Xylene (o) | 95476 |
| 60. Xylene (p) | 106423 |

TABLE 8 TO SUBPART VVVVVV OF PART 63—EMISSION LIMITS AND COMPLIANCE REQUIREMENTS FOR HEAT EXCHANGE SYSTEMS

[As required in § 63.11499, you must comply with the requirements for heat exchange systems as shown in the following table]

| For . . . | You must . . . | Except . . . |
|---|---|---|
| 1. Each heat exchange system with a cooling water flow rate ≥8,000 gal/min and not meeting one or more of the conditions in § 63.104(a). | a. Comply with the monitoring requirements in § 63.104(c), the leak repair requirements in § 63.104(d) and (e), and the recordkeeping and reporting requirements in § 63.104(f); or | i. The reference to monthly monitoring for the first 6 months in § 63.104(b)(1) and (c)(1)(iii) does not apply. Monitoring shall be no less frequent than quarterly;<br>ii. The reference in § 63.104(f)(1) to record retention requirements in § 63.103(c)(1) does not apply. Records must be retained as specified in §§ 63.10(b)(1) and 63.11501(c); and<br>iii. The reference in § 63.104(f)(2) to ''the next semi-annual periodic report required by § 63.152(c)'' means the next semi-annual compliance report required by § 63.11501(f). |
| | b. Comply with the heat exchange system requirements in § 63.104(b) and the requirements referenced therein. | i. Not applicable. |

[77 FR 75762, Dec. 21, 2012]

TABLE 9 TO SUBPART VVVVVV OF PART 63—APPLICABILITY OF GENERAL PROVISIONS TO SUBPART VVVVVV

As required in § 63.11501(a), you must comply with the requirements of the NESHAP General Provisions (40 CFR part 63, subpart A) as shown in the following table.

| Citation | Subject | Applies to Subpart VVVVVV? | Explanation |
|---|---|---|---|
| 63.1(a)(1), (a)(2), (a)(3), (a)(4), (a)(6), (a)(10)–(a)(12) (b)(1), (b)(3), (c)(1), (c)(2), (c)(5), (e). | Applicability | Yes. | |
| 63.1(a)(5), (a)(7)-(a)(9), (b)(2), (c)(3), (c)(4), (d). | Reserved | No. | |
| 63.2 | Definitions | Yes. | |
| 63.3 | Units and Abbreviations | Yes. | |
| 63.4 | Prohibited Activities and Circumvention. | Yes. | |
| 63.5 | Preconstruction Review and Notification Requirements. | Yes. | |
| 63.6(a), (b)(1)–(b)(5), (b)(7), (c)(1), (c)(2), (c)(5), (e)(1)(iii), (g), (i), (j). | Compliance with Standards and Maintenance Requirements. | Yes. | |
| 63.6(b)(6), (c)(3), (c)(4), (d), (h)(3), (h)(5)(iv). | Reserved | No. | |
| 63.6(e)(1)(i) and (ii), (e)(3), and (f)(1). | SSM Requirements | No | See § 63.11495(d) for general duty requirement. |
| 63.6(h)(1)–(h)(4), (h)(5)(i)–(h)(5)(iii), (h)(6)–(h)(9). | | No | Subpart VVVVVV does not include opacity or visible emissions (VE) standards or require a continuous opacity monitoring system (COMS). |
| 63.7(a)(1), (a)(3), (a)(4), (c), (e)(4), and (f)–(h). | Performance Testing Requirements. | Yes. | |
| 63.7(a)(2), (b), (d), (e)(2)–(e)(3) | Performance Testing Schedule, Notification of Performance Test, Performance Testing Facilities, and Conduct of Performance Tests. | Yes/No | Requirements apply if conducting test for metal HAP control; requirements in §§ 63.997(c)(1), (d), (e), and 63.999(a)(1) apply, as referenced in § 63.11496(g), if conducting test for organic HAP or hydrogen halide and halogen HAP control device. |

| Citation | Subject | Applies to Subpart VVVVVV? | Explanation |
|---|---|---|---|
| 63.7(e)(1) | Performance Testing | No | See §63.11496(f)(3)(ii) if conducting a test for metal HAP emissions. See §§63.11496(g) and 63.997(e)(1) if conducting a test for continuous process vents or for hydrogen halide and halogen emissions. See §§63.11496(g) and 63.2460(c) if conducting a test for batch process vents. |
| 63.8(a)(1), (a)(4), (b), (c)(1)(ii), (c)(2)–(c)(3), (f)(1)–(5). | Monitoring Requirements | Yes. | |
| 63.8(a)(2) | Monitoring Requirements | No. | |
| 63.8(a)(3) | Reserved | No. | |
| 63.8(c)(1)(i) | General Duty to Minimize Emissions and CMS Operation. | No. | |
| 63.8(c)(1)(iii) | Requirement to Develop SSM Plan for CMS. | No. | |
| 63.8(c)(4) | | Yes | Only for CEMS. CPMS requirements in 40 CFR part 63, subpart SS are referenced from §63.11496. Requirements for COMS do not apply because subpart VVVVVV does not require COMS. |
| 63.8(c)(5) | | No | Subpart VVVVVV does not require COMS. |
| 63.8(c)(6)–(c)(8), (d)(1)–(d)(2), (e), (f)(6). | | Yes | Requirements apply only if you use a continuous emission monitoring system (CEMS) to demonstrate compliance with the alternative standard in §63.11496(e). |
| 63.8(d)(3) | Written Procedures for CMS. | Yes | Requirement applies except for last sentence, which refers to an SSM plan. SSM plans are not required. |
| 63.8(g)(1)–(g)(4) | | Yes | Data reduction requirements apply only if you use CEMS to demonstrate compliance with alternative standard in §63.11496(e). COMS requirements do not apply. Requirement in §63.8(g)(2) does not apply because data reduction for CEMS are specified in 40 CFR part 63, subpart FFFF. |
| 63.8(g)(5) | | No | Data reduction requirements for CEMS are specified in §63.2450(j)(4), as referenced from §63.11496. CPMS requirements are specified in 40 CFR part 63, subpart SS, as referenced from §63.11496. |
| 63.9(a), (b)(1), (b)(2), (b)(4), (b)(5), (c), (d), (e), (i). | Notification Requirements. | Yes. | |
| 63.9(b)(3), (h)(4) | Reserved | No. | |
| 63.9(f) | | No | Subpart VVVVVV does not contain opacity or VE limits. |
| 63.9(g) | | Yes | Additional notification requirement applies only if you use CEMS to demonstrate compliance with alternative standard in §63.11496(e). |
| 63.9(h)(1)–(h)(3), (h)(5)–(h)(6) | | Yes | Except subpart VVVVVV does not contain opacity or VE limits. |
| 63.9(i) | | Yes. | |
| 63.9(j) | Change in Information Already Provided. | No | Notification of process changes that affect a compliance determination are required in §63.11501(d)(4). |
| 63.10(a) | Recordkeeping Requirements. | Yes. | |
| 63.10(b)(1) | | Yes. | |
| 63.10(b)(2)(i) | Recordkeeping of Occurrence and Duration of Startups and Shutdowns. | No | See §63.11501(c)(8) for recordkeeping of occurrence and duration of each startup and shutdown for continuous process vents that are subpart to Table 3 to this subpart. |
| 63.10(b)(2)(ii) | Recordkeeping of Malfunctions. | No | See §63.11501(c)(1)(vii) and (viii) for recordkeeping of (1) date, time, duration, and volume of excess emissions and (2) actions taken during malfunction. |

| Citation | Subject | Applies to Subpart VVVVVV? | Explanation |
|---|---|---|---|
| 63.10(b)(2)(iii) | Maintenance Records | Yes. | |
| 63.10(b)(2)(iv) and (v) | Actions Taken to Minimize Emissions During SSM. | No. | |
| 63.10(b)(2)(vi), (x), (xi), (xiii) | | Yes | Apply only if you use CEMS to demonstrate compliance with alternative standard in § 63.11496(e). |
| 63.10(b)(2)(vii)–(b)(2)(ix), (b)(2)(xii), (b)(2)(xiv). | | Yes. | |
| 63.10(b)(3) | | Yes. | |
| 63.10(c)(1), (c)(5)–(c)(6), (c)(13)–(c)(14). | | Yes | Apply only if you use CEMS to demonstrate compliance with alternative standard in § 63.11496(e). |
| 63.10(c)(7)–(8) | Additional Recordkeeping Requirements for CMS—Identifying Exceedances and Excess Emissions. | Yes. | |
| 63.10(c)(10) | Recordkeeping Nature and Cause of Malfunctions. | No | See § 63.11501(c)(1)(vii) and (viii) for malfunctions recordkeeping requirements. |
| 63.10(c)(11) | Recording Corrective Actions. | No | See § 63.11501(c)(1)(vii) and (viii) for malfunctions recordkeeping requirements. |
| 63.10(c)(12) | | Yes. | |
| 63.10(c)(15) | Use of SSM Plan | No. | |
| 63.10(c)(2)–(c)(4), (c)(9) | Reserved | No. | |
| 63.10(d)(1), (d)(2), (d)(4), (e)(1), (e)(2), (f). | Reporting Requirements | Yes. | |
| 63.10(d)(3) | | No | Subpart VVVVVV does not include opacity or VE limits. |
| 63.10(d)(5) | SSM Reports | No | See § 63.11501(d)(8) for reporting requirements for malfunctions. |
| 63.10(e)(1)–(e)(2) | | Yes | Apply only if you use CEMS to demonstrate compliance with alternative standard in § 63.11496(e). |
| 63.10(e)(3) | | Yes. | |
| 63.10(e)(4) | | No | Subpart VVVVVV does not include opacity or VE limits. |
| 63.11 | Control Device Requirements. | Yes. | |
| 63.12 | State Authorities and Delegations. | Yes. | |
| 63.13 | Addresses | Yes. | |
| 63.14 | Incorporations by Reference. | Yes. | |
| 63.15 | Availability of Information and Confidentiality. | Yes. | |
| 63.16 | Performance Track Provisions. | Yes. | |

[74 FR 56041, Oct. 29, 2009, as amended at 77 FR 75762, Dec. 21, 2012]

## Subpart WWWWWW—National Emission Standards for Hazardous Air Pollutants: Area Source Standards for Plating and Polishing Operations

SOURCE: 73 FR 37741, July 1, 2008, unless otherwise noted.

APPLICABILITY AND COMPLIANCE DATES

### § 63.11504 Am I subject to this subpart?

(a) You are subject to this subpart if you own or operate a plating and polishing facility that is an area source of hazardous air pollutant (HAP) emissions and meets the criteria specified in paragraphs (a)(1) through (3) of this section.

(1) A plating and polishing facility is a plant site that is engaged in one or more of the processes listed in paragraphs (a)(1)(i) through (vi) of this section.

(i) Electroplating other than chromium electroplating (i.e., non-chromium electroplating).

(ii) Electroless or non-eletrolytic plating.

(iii) Other non-electrolytic metal coating processes, such as chromate conversion coating, nickel acetate sealing, sodium dichromate sealing, and manganese phosphate coating; and thermal spraying.

(iv) Dry mechanical polishing of finished metals and formed products after plating or thermal spraying.

(v) Electroforming.

(vi) Electropolishing.

(2) A plating or polishing facility is an area source of HAP emissions, where an area source is any stationary source or group of stationary sources within a contiguous area under common control that does not have the potential to emit any single HAP at a rate of 9.07 megagrams per year (Mg/yr) (10 tons per year (tpy)) or more and any combination of HAP at a rate of 22.68 Mg/yr (25 tpy) or more.

(3) Your plating and polishing facility uses or has emissions of compounds of one or more plating and polishing metal HAP, which means any compound of any of the following metals: cadmium, chromium, lead, manganese, and nickel, as defined in §63.11511, ''What definitions apply to this subpart?'' With the exception of lead, plating and polishing metal HAP also include any of these metals in the elemental form.

(b) [Reserved]

[73 FR 37741, July 1, 2008, as amended at 76 FR 57919, Sept. 19, 2011]

### §63.11505 What parts of my plant does this subpart cover?

(a) This subpart applies to each new or existing affected source, as specified in paragraphs (a)(1) through (3) of this section, at all times. A new source is defined in §63.11511, ''What definitions apply to this subpart?''

(1) Each tank that contains one or more of the plating and polishing metal HAP, as defined in §63.11511, ''What definitions apply to this subpart?'', and is used for non-chromium electroplating; electroforming; electropolishing; electroless plating or other non-electrolytic metal coating operations, such as chromate conversion coating, nickel acetate sealing, sodium dichromate sealing, and manganese phosphate coating.

(2) Each thermal spraying operation that applies one or more of the plating and polishing metal HAP, as defined in §63.11511, ''What definitions apply to this subpart?''

(3) Each dry mechanical polishing operation that emits one or more of the plating and polishing metal HAP, as defined in §63.11511, ''What definitions apply to this subpart?''

(b) An affected source is existing if you commenced construction or reconstruction of the affected source on or before March 14, 2008.

(c) An affected source is new if you commenced construction or reconstruction of the affected source after March 14, 2008.

(d) This subpart does not apply to any of the process units or operations described in paragraphs (d)(1) through (6) of this section.

(1) Process units that are subject to the requirements of 40 CFR part 63, subpart N (National Emission Standards for Chromium Emissions from Hard and Decorative Chromium Electroplating and Chromium Anodizing Tanks).

(2) Research and development process units, as defined in §63.11511, ''What definitions apply to this subpart?''

(3) Process units that are used strictly for educational purposes.

(4) Plating, polishing, coating, or thermal spraying conducted to repair surfaces or equipment.

(5) Dry mechanical polishing conducted to restore the original finish to a surface.

(6) Any plating or polishing process that uses process materials that contain cadmium, chromium, lead, or nickel (as the metal) in amounts less than 0.1 percent by weight, or that contain manganese in amounts less than 1.0 percent by weight (as the metal), as used. Information used to determine the amount of plating and polishing metal HAP in materials used in the plating or polishing process may include information reported on the Material Safety Data Sheet for the material, but is not required. For plating or polishing tanks, the HAP content may

be determined from the final bath contents ''as used'' to plate or to polish.

(e) You are exempt from the obligation to obtain a permit under 40 CFR part 70 or 40 CFR part 71, ''Title V,'' provided you are not otherwise required to obtain a permit under 40 CFR 70.3(a) or 40 CFR 71.3(a) for a reason other than your status as an area source under this subpart. Notwithstanding the previous sentence, you must continue to comply with the provisions of this subpart applicable to area sources.

[73 FR 37741, July 1, 2008, as amended at 76 FR 57919, Sept. 19, 2011]

### § 63.11506 What are my compliance dates?

(a) If you own or operate an existing affected source, you must achieve compliance with the applicable provisions of this subpart no later than July 1, 2010.

(b) If you own or operate a new affected source for which the initial startup date is on or before July 1, 2008, you must achieve compliance with the provisions of this subpart no later than July 1, 2008.

(c) If you own or operate a new affected source for which the initial startup date is after July 1, 2008, you must achieve compliance with the provisions of this subpart upon initial startup of your affected source.

## STANDARDS AND COMPLIANCE REQUIREMENTS

### § 63.11507 What are my standards and management practices?

(a) If you own or operate an affected new or existing non-cyanide electroplating, electroforming, or electropolishing tank (hereafter referred to as an ''electrolytic'' process tank, as defined in § 63.11511, ''What definitions apply to this subpart?'') that contains one or more of the plating and polishing metal HAP and operates at a pH of less than 12, you must comply with the requirements in paragraph (a)(1), (2), or (3) of this section, and implement the applicable management practices in paragraph (g) of this section, as practicable.

(1) You must use a wetting agent/fume suppressant in the bath of the affected tank, as defined in § 63.11511, ''What definitions apply to this subpart?'' and according to paragraphs (a)(1)(i) through (iii) of this section.

(i) You must initially add the wetting agent/fume suppressant in the amounts recommended by the manufacturer for the specific type of electrolytic process.

(ii) You must add wetting agent/fume suppressant in proportion to the other bath chemistry ingredients that are added to replenish the bath, as in the original make-up of the bath, or in proportions such that the bath contents are returned to that of the original make-up of the bath.

(iii) If a wetting agent/fume suppressant is included in the electrolytic process bath chemicals used in the affected tank according to the manufacturer's instructions, it is not necessary to add additional wetting agent/fume suppressants to the tank to comply with this rule.

(2) You must capture and exhaust emissions from the affected tank to any one of the following emission control devices: composite mesh pad, packed bed scrubber, or mesh pad mist eliminator, according to paragraphs (a)(2)(i) and (ii) of this section.

(i) You must operate all capture and control devices according to the manufacturer's specifications and operating instructions.

(ii) You must keep the manufacturer's specifications and operating instructions at the facility at all times in a location where they can be easily accessed by the operators.

(3) You must cover the tank surface according to paragraph (a)(3)(i) or (ii) of this section.

(i) For batch electrolytic process tanks, as defined in § 63.11511, ''What definitions apply to this subpart?'', you must use a tank cover, as defined in § 63.11511, over all of the effective surface area of the tank for at least 95 percent of the electrolytic process operating time.

(ii) For continuous electrolytic process tanks, as defined in § 63.11511, ''What definitions apply to this subpart?'', you must cover at least 75 percent of the surface of the tank, as defined in § 63.11511, whenever the electrolytic process tank is in operation.

(b) If you own or operate an affected new or existing ''flash'' or short-term electroplating tank, as defined in §63.11511, ''What definitions apply to this subpart?'', that uses or emits one or more of the plating and polishing metal HAP, you must comply with the requirements specified in paragraph (b)(1) or (b)(2), and implement the applicable management practices in paragraph (g) of this section, as practicable.

(1) You must limit short-term or ''flash'' electroplating to no more than 1 cumulative hour per day or 3 cumulative minutes per hour of plating time.

(2) You must use a tank cover, as defined in §63.11511, ''What definitions apply to this subpart?'', for at least 95 percent of the plating time.

(c) If you own or operate an affected new or existing process tank that is used both for short-term electroplating and for electrolytic processing of longer duration (i.e., processing that does not meet the definition of short-term or flash electroplating) and contains one or more of the plating and polishing metal HAP, you must meet the requirements specified in paragraph (a) or (b) of this section, whichever apply to the process operation, and implement the applicable management practices in paragraph (g) of this section, as practicable.

(d) If you own or operate an affected new or existing electroplating tank that uses cyanide in the plating bath, operates at pH greater than or equal to 12, and contains one or more of the plating and polishing metal HAP, you must comply with the requirements in paragraphs (d)(1) and (2) of this section:

(1) You must measure and record the pH of the bath upon startup of the bath, as defined in §63.11511, ''What definitions apply to this subpart?'' No additional pH measurements are required.

(2) You must implement the applicable management practices in paragraph (g) of this section, as practicable.

(e) If you own or operate an affected new or existing dry mechanical polishing machine that emits one or more of the plating and polishing metal HAP, you must operate a capture system that captures particulate matter (PM) emissions from the dry mechanical polishing process and transports the emissions to a cartridge, fabric, or high efficiency particulate air (HEPA) filter, according to paragraphs (e)(1) and (2) of this section.

(1) You must operate all capture and control devices according to the manufacturer's specifications and operating instructions.

(2) You must keep the manufacturer's specifications and operating instructions at the facility at all times in a location where they can be easily accessed by the operators.

(f) If you own or operate an affected thermal spraying operation that applies one or more of the plating and polishing metal HAP, you must meet the applicable requirements specified in paragraphs (f)(1) through (3) of this section, and the applicable management practices in paragraph (g) of this section.

(1) For existing permanent thermal spraying operations, you must operate a capture system that collects PM emissions from the thermal spraying process and transports the emissions to a water curtain, fabric filter, cartridge, or HEPA filter, according to paragraphs (f)(1)(i) and (ii) of this section.

(2) For new permanent thermal spraying operations, you must operate a capture system that collects PM emissions from the thermal spraying process and transports the emissions to a fabric, cartridge, or HEPA filter, according to paragraphs (f)(2)(i) and (ii) of this section.

(3) For temporary thermal spraying operations, as defined in §63.11511 ''What definitions apply to this subpart?'', you must meet the applicable requirements specified in paragraphs (f)(3)(i) and (ii) of this section.

(i) You must document the amount of time the thermal spraying occurs each day, and where it is conducted.

(ii) You must implement the applicable management practices specified in paragraph (g) of this section, as practicable.

(g) If you own or operate an affected new or existing plating and polishing process unit that contains, applies, or emits one or more of the plating and

polishing metal HAP, you must implement the applicable management practices in paragraphs (g)(1) through (12) of this section, as practicable.

(1) Minimize bath agitation when removing any parts processed in the tank, as practicable except when necessary to meet part quality requirements.

(2) Maximize the draining of bath solution back into the tank, as practicable, by extending drip time when removing parts from the tank; using drain boards (also known as drip shields); or withdrawing parts slowly from the tank, as practicable.

(3) Optimize the design of barrels, racks, and parts to minimize dragout of bath solution (such as by using slotted barrels and tilted racks, or by designing parts with flow-through holes to allow the tank solution to drip back into the tank), as practicable.

(4) Use tank covers, if already owned and available at the facility, whenever practicable.

(5) Minimize or reduce heating of process tanks, as practicable (e.g., when doing so would not interrupt production or adversely affect part quality).

(6) Perform regular repair, maintenance, and preventive maintenance of racks, barrels, and other equipment associated with affected sources, as practicable.

(7) Minimize bath contamination, such as through the prevention or quick recovery of dropped parts, use of distilled/de-ionized water, water filtration, pre-cleaning of parts to be plated, and thorough rinsing of pre-treated parts to be plated, as practicable.

(8) Maintain quality control of chemicals, and chemical and other bath ingredient concentrations in the tanks, as practicable.

(9) Perform general good housekeeping, such as regular sweeping or vacuuming, if needed, and periodic washdowns, as practicable.

(10) Minimize spills and overflow of tanks, as practicable.

(11) Use squeegee rolls in continuous or reel-to-reel plating tanks, as practicable.

(12) Perform regular inspections to identify leaks and other opportunities for pollution prevention.

[73 FR 37741, July 1, 2008, as amended at 76 FR 57920, Sept. 19, 2011]

### § 63.11508 What are my compliance requirements?

(a) If you own or operate an affected source, you must submit a Notification of Compliance Status in accordance with § 63.11509(b) of ''What are my notification, reporting, and recordkeeping requirements?''

(b) You must be in compliance with the applicable management practices and equipment standards in this subpart at all times.

(c) To demonstrate initial compliance, you must satisfy the requirements specified in paragraphs (c)(1) through (11) of this section.

(1) If you own or operate an affected electroplating, electroforming, or electropolishing tank that contains one or more of the plating and polishing metal HAP and is subject to the requirements in § 63.11507(a), ''What are my standards and management practices?'', and you use a wetting agent/fume suppressant to comply with this subpart, you must demonstrate initial compliance according to paragraphs (c)(1)(i) through (iv) of this section.

(i) You must add wetting agent/fume suppressant to the bath of each affected tank according to manufacturer's specifications and instructions.

(ii) You must state in your Notification of Compliance Status that you add wetting agent/fume suppressant to the bath according to manufacturer's specifications and instructions.

(iii) You must implement the applicable management practices specified in § 63.11507(g), ''What are my standards and management practices?'', as practicable.

(iv) You must state in your Notification of Compliance Status that you have implemented the applicable management practices specified in § 63.11507(g), ''What are my standards and management practices?'', as practicable.

(2) If you own or operate an affected electroplating, electroforming, or electropolishing tank that contains

one or more of the plating and polishing metal HAP and is subject to the requirements in §63.11507(a), ''What are my standards and management practices?'', and you use a control system, as defined in §63.11511, ''What definitions apply to this subpart?'', to comply with this subpart, you must demonstrate initial compliance according to paragraphs (c)(2)(i) through (v) of this section.

(i) You must install a control system designed to capture emissions from the affected tank and exhaust them to a composite mesh pad, packed bed scrubber, or mesh pad mist eliminator.

(ii) You must state in your Notification of Compliance Status that you have installed the control system according to the manufacturer's specifications and instructions.

(iii) You must implement the applicable management practices specified in §63.11507(g), ''What are my standards and management practices?'', as practicable.

(iv) You must state in your Notification of Compliance Status that you have implemented the applicable management practices specified in §63.11507(g), ''What are my standards and management practices?'', as practicable.

(v) You must follow the manufacturer's specifications and operating instructions for the control systems at all times.

(3) If you own or operate an affected batch electrolytic process tank, as defined in §63.11511, ''What definitions apply to this subpart?'' that contains one or more of the plating and polishing metal HAP and which is subject to the requirements in §63.11507(a), ''What are my standards and management practices?'' and you use a tank cover, as defined in §63.11511, to comply with §11507(a), (b) or (c) of this subpart, you must demonstrate initial compliance according to paragraphs (c)(3)(i) through (iv) of this section.

(i) You must install a tank cover on the affected tank.

(ii) You must state in your Notification of Compliance Status that you operate the tank with the cover in place at least 95 percent of the electrolytic process operating time.

(iii) You must implement the applicable management practices specified in §63.11507(g), ''What are my standards and management practices?'', as practicable.

(iv) You must state in your Notification of Compliance Status that you have implemented the applicable management practices specified in §63.11507(g), ''What are my standards and management practices?'', as practicable.

(4) If you own or operate an affected continuous electrolytic process tank, as defined in §63.11511, ''What definitions apply to this subpart?'' that contains one or more of the plating and polishing metal HAP and is subject to the requirements in §63.11507(a), ''What are my standards and management practices?'' and you cover the tank surface to comply with §11507(a), (b) or (c) of this subpart, you must demonstrate initial compliance according to paragraphs (c)(4)(i) through (iv) of this section.

(i) You must cover at least 75 percent of the surface area of the affected tank.

(ii) You must state in your Notification of Compliance Status that you operate the tank with the surface cover in place whenever the continuous electrolytic process is in operation.

(iii) You must implement the applicable management practices specified in §63.11507(g), ''What are my standards and management practices?'', as practicable.

(iv) You must state in your Notification of Compliance Status that you have implemented the applicable management practices specified in §63.11507(g), ''What are my standards and management practices?'', as practicable.

(5) If you own or operate an affected flash or short-term electroplating tank that contains one or more of the plating and polishing metal HAP and is subject to the requirements in §63.11507(b), ''What are my standards and management practices?'' and you comply with §11507(a), (b) or (c) of this subpart by limiting the plating time of the affected tank, you must demonstrate initial compliance according to paragraphs (c)(5)(i) through (iii) of this section.

(i) You must state in your Notification of Compliance Status that you limit short-term or flash electroplating to no more than 1 cumulative hour per day, or 3 cumulative minutes per hour of plating time.

(ii) You must implement the applicable management practices specified in § 63.11507(g), ''What are my standards and management practices?'', as practicable.

(iii) You must state in your Notification of Compliance Status that you have implemented the applicable management practices specified in § 63.11507(g), ''What are my standards and management practices?'', as practicable.

(6) If you own or operate an affected flash or short-term electroplating tank that contains one or more of the plating and polishing metal HAP and is subject to the requirements in § 63.11507(b), ''What are my standards and management practices?'' and you comply with § 11507(a), (b) or (c) of this subpart by operating the affected tank with a cover, you must demonstrate initial compliance according to paragraphs (c)(6)(i) through (iv) of this section.

(i) You must install a tank cover on the affected tank.

(ii) You must state in your Notification of Compliance Status that you operate the tank with the cover in place at least 95 percent of the plating time.

(iii) You must implement the applicable management practices specified in § 63.11507(g), ''What are my standards and management practices?'', as practicable.

(iv) You must state in your Notification of Compliance Status that you have implemented the applicable management practices specified in § 63.11507(g), ''What are my standards and management practices?'', as practicable.

(7) If you own or operate an affected tank that contains one or more of the plating and polishing metal HAP, uses cyanide in the bath, and is subject to the management practices specified in § 63.11507(d), ''What are my standards and management practices?'', you must demonstrate initial compliance according to paragraphs (c)(7)(i) through (iii) of this section.

(i) You must report in your Notification of Compliance Status the pH of the bath solution that was measured at startup, as defined in § 63.11511, according to the requirements of § 63.11507(d)(1).

(ii) You must implement the applicable management practices specified in § 63.11507(g), ''What are my standards and management practices?'', as practicable.

(iii) You must state in your Notification of Compliance Status that you have implemented the applicable management practices specified in § 63.11490(g), ''What are my standards and management practices?'', as practicable.

(8) If you own or operate an affected dry mechanical polishing operation that emits one or more of the plating and polishing metal HAP and is subject to the requirements in § 63.11507(e), ''What are my standards and management practices?'', you must demonstrate initial compliance according to paragraphs (c)(8)(i) through (iii) of this section.

(i) You must install a control system that is designed to capture PM emissions from the polishing operation and exhaust them to a cartridge, fabric, or HEPA filter.

(ii) You must state in your Notification of Compliance Status that you have installed the control system according to the manufacturer's specifications and instructions.

(iii) You must keep the manufacturer's operating instructions at the facility at all times in a location where they can be easily accessed by the operators.

(9) If you own or operate an existing affected permanent thermal spraying operation that applies one or more of the plating and polishing metal HAP and is subject to the requirements in § 63.11507(f)(1), ''What are my standards and management practices?'', you must demonstrate initial compliance according to paragraphs (c)(9)(i) through (iii) of this section.

(i) You must install a control system that is designed to capture PM emissions from the thermal spraying operation and exhaust them to a water curtain, or a cartridge, fabric, or HEPA filter.

(ii) You must state in your Notification of Compliance Status that you have installed and are operating the control system according to the manufacturer's specifications and instructions.

(iii) You must keep the manufacturer's operating instructions at the facility at all times in a location where they can be easily accessed by the operators.

(10) If you own or operate a new affected permanent thermal spraying operation that applies one or more of the plating and polishing metal HAP and is subject to the requirements in §63.11507(f)(2), ''What are my standards and management practices?'', you must demonstrate initial compliance according to paragraphs (c)(10)(i) through (iii) of this section.

(i) You must install and operate a control system that is designed to capture PM emissions from the thermal spraying operation and exhaust them to a cartridge, fabric, or HEPA filter.

(ii) You must state in your Notification of Compliance Status that you have installed and operate the control system according to the manufacturer's specifications and instructions.

(iii) You must keep the manufacturer's operating instructions at the facility at all times in a location where they can be easily accessed by the operators.

(11) If you own or operate an affected temporary thermal spraying operation that applies one or more of the plating and polishing metal HAP and is subject to the requirements in §63.11507(f)(3), ''What are my standards and management practices?'', you must demonstrate initial compliance according to paragraphs (c)(11)(i) and (ii) of this section.

(i) You must implement the applicable management practices specified in §63.11507(g), ''What are my standards and management practices?'', as practicable.

(ii) You must state in your Notification of Compliance Status that you have implemented the applicable management practices specified in §63.11507(g), ''What are my standards and management practices?'', as practicable.

(d) To demonstrate continuous compliance with the applicable management practices and equipment standards specified in this subpart, you must satisfy the requirements specified in paragraphs (d)(1) through (8) of this section.

(1) You must always operate and maintain your affected source, including air pollution control equipment.

(2) You must prepare an annual compliance certification according to the requirements specified in §63.11509(c), ''Notification, Reporting, and Recordkeeping,'' and keep it in a readily-accessible location for inspector review.

(3) If you own or operate an affected electroplating, electroforming, or electropolishing tank that contains one or more of the plating and polishing metal HAP and is subject to the requirements in §63.11507(a), ''What are my standards and management practices?'', and you use a wetting agent/fume suppressant to comply with this subpart, you must demonstrate continuous compliance according to paragraphs (d)(3)(i) through (iii) of this section.

(i) You must record that you have added the wetting agent/fume suppressant to the tank bath in the original make-up of the tank.

(ii) For tanks where the wetting agent/fume suppressant is a separate ingredient from the other tank additives, you must demonstrate continuous compliance according to paragraphs (d)(3)(ii) (A) and (B) this section.

(A) You must add wetting agent/fume suppressant in proportion to the other bath chemistry ingredients that are added to replenish the tank bath, as in the original make-up of the tank; or in proportion such that the bath is brought back to the original make-up of the tank.

(B) You must record each addition of wetting agent/fume suppressant to the tank bath.

(iii) You must state in your annual compliance certification that you have added wetting agent/fume suppressant to the bath according to the manufacturer's specifications and instructions.

(4) If you own or operate an affected electroplating, electroforming, or electropolishing tank that contains

one or more of the plating and polishing metal HAP and is subject to the requirements in § 63.11507(a), ''What are my standards and management practices?'', and you use a control system to comply with this subpart; an affected dry mechanical polishing operation that is subject to § 63.11507(e); or an affected thermal spraying operation that is subject to § 63.11507(f)(1) or (2), you must demonstrate continuous compliance according to paragraphs (d)(4)(i) through (v) of this section.

(i) You must operate and maintain the control system according to the manufacturer's specifications and instructions.

(ii) Following any malfunction or failure of the capture or control devices to operate properly, you must take immediate corrective action to return the equipment to normal operation according to the manufacturer's specifications and operating instructions.

(iii) You must state in your annual certification that you have operated and maintained the control system according to the manufacturer's specifications and instructions.

(iv) You must record the results of all control system inspections, deviations from proper operation, and any corrective action taken.

(v) You must keep the manufacturer's operating instructions at the facility at all times in a location where they can be easily accessed by the operators.

(5) If you own or operate an affected flash or short-term electroplating tank that contains one or more of the plating and polishing metal HAP and is subject to the requirements in § 63.11507(b), ''What are my standards and management practices?'' and you comply with § 11507(a), (b) or (c) of this subpart by limiting the plating time for the affected tank, you must demonstrate continuous compliance according to paragraphs (d)(5)(i) through (iii) of this section.

(i) You must limit short-term or flash electroplating to no more than 1 cumulative hour per day or 3 cumulative minutes per hour of plating time.

(ii) You must record the times that the affected tank is operated each day.

(iii) You must state in your annual compliance certification that you have limited short-term or flash electroplating to no more than 1 cumulative hour per day or 3 cumulative minutes per hour of plating time.

(6) If you own or operate an affected batch electrolytic process tank that contains one or more of the plating and polishing metal HAP and is subject to the requirements of § 63.11507(a), ''What are my standards and management practices?'' or a flash or short-term electroplating tank that contains one or more of the plating and polishing metal HAP and is subject to the requirements in § 63.11507(b), and you comply with § 11507(a), (b) or (c) of this section by operating the affected tank with a cover, you must demonstrate continuous compliance according to paragraphs (d)(6)(i) through (iii) of this section.

(i) You must operate the tank with the cover in place at least 95 percent of the electrolytic process operating time.

(ii) You must record the times that the tank is operated and the times that the tank is covered on a daily basis.

(iii) You must state in your annual certification that you have operated the tank with the cover in place at least 95 percent of the electrolytic process time.

(7) If you own or operate an affected continuous electrolytic process tank that contains one or more of the plating and polishing metal HAP and is subject to the requirements in § 63.11507(a), ''What are my standards and management practices?'' and you comply with § 11507(a), (b) or (c) of this subpart by operating the affected tank with a cover, you must demonstrate continuous compliance according to paragraphs (d)(7)(i) and (ii) of this section.

(i) You must operate the tank with at least 75 percent of the surface covered during all periods of electrolytic process operation.

(ii) You must state in your annual certification that you have operated the tank with 75 percent of the surface covered during all periods of electrolytic process operation.

(8) If you own or operate an affected tank or other operation that is subject

to the management practices specified in §63.11507(g), ''What are my standards and management practices?'', you must demonstrate continuous compliance according to paragraphs (d)(8)(i) and (ii) of this section.

(i) You must implement the applicable management practices during all times that the affected tank or process is in operation.

(ii) You must state in your annual compliance certification that you have implemented the applicable management practices, as practicable.

[73 FR 37741, July 1, 2008, as amended at 76 FR 57920, Sept. 19, 2011]

### §63.11509 What are my notification, reporting, and recordkeeping requirements?

(a) If you own or operate an affected source, as defined in §63.11505(a), ''What parts of my plant does this subpart cover?'', you must submit an Initial Notification in accordance with paragraphs (a)(1) through (4) of this section by the dates specified.

(1) The Initial Notification must include the information specified in §63.9(b)(2)(i) through (iv) of the General Provisions of this part.

(2) The Initial Notification must include a description of the compliance method (e.g., use of wetting agent/fume suppressant) for each affected source.

(3) If you start up your affected source on or before July 1, 2008, you must submit an Initial Notification not later than 120 calendar days after July 1, 2008, or no later than 120 days after the source becomes subject to this subpart, whichever is later.

(4) If you startup your new affected source after July 1, 2008, you must submit an Initial Notification when you become subject to this subpart.

(b) If you own or operate an affected source, you must submit a Notification of Compliance Status in accordance with paragraphs (b)(1) through (3) of this section.

(1) The Notification of Compliance Status must be submitted before the close of business on the compliance date specified in §63.11506, ''What are my compliance dates?''

(2) The Notification of Compliance Status must include the items specified in paragraphs (b)(2)(i) through (iv) of this section.

(i) List of affected sources and the plating and polishing metal HAP used in, or emitted by, those sources.

(ii) Methods used to comply with the applicable management practices and equipment standards.

(iii) Description of the capture and emission control systems used to comply with the applicable equipment standards.

(iv) Statement by the owner or operator of the affected source as to whether the source is in compliance with the applicable standards or other requirements.

(3) If a facility makes a change to any items in (b)(2)(i), iii, and (iv) of this section that does not result in a deviation, an amended Notification of Compliance Status should be submitted within 30 days of the change.

(c) If you own or operate an affected source, you must prepare an annual certification of compliance report according to paragraphs (c)(1) through (7) of this section. These reports do not need to be submitted unless a deviation from the requirements of this subpart has occurred during the reporting year, in which case, the annual compliance report must be submitted along with the deviation report.

(1) If you own or operate an affected electroplating, electroforming, or electropolishing tank that is subject to the requirements in §63.11507(a)(1), ''What are my standards and management practices?'', you must state in your annual compliance certification that you have added wetting agent/fume suppressant to the bath according to the manufacturer's specifications and instructions.

(2) If you own or operate any one of the affected sources listed in paragraphs (c)(2)(i) through (iii) of this section, you must state in your annual certification that you have operated and maintained the control system according to the manufacturer's specifications and instructions.

(i) Electroplating, electroforming, or electropolishing tank that is subject to the requirements in §63.11507(a), ''What are my standards and management practices?'', and you use a control system to comply with this subpart;

(ii) Dry mechanical polishing operation that is subject to § 63.11507(e); or

(iii) Permanent thermal spraying operation that is subject to § 63.11507(f)(1) or (2).

(3) If you own or operate an affected flash or short-term electroplating tank that is subject to the requirements in § 63.11507(b), ''What are my standards and management practices?'' and you comply with § 11507(a), (b) or (c) of this subpart by limiting the plating time of the affected tank, you must state in your annual compliance certification that you have limited short-term or flash electroplating to no more than 1 cumulative hour per day or 3 cumulative minutes per hour of plating time.

(4) If you own or operate an affected batch electrolytic process tank that is subject to the requirements of § 63.11507(a) or a flash or short-term electroplating tank that is subject to the requirements in § 63.11507(b), ''What are my standards and management practices?'' and you comply with § 11507(a), (b) or (c) of this subpart by operating the affected tank with a cover, you must state in your annual certification that you have operated the tank with the cover in place at least 95 percent of the electrolytic process time.

(5) If you own or operate an affected continuous electrolytic process tank that is subject to the requirements of § 63.11507(a), ''What are my standards and management practices?'' and you comply with § 11507(a), (b) or (c) of this subpart by operating the affected tank with a cover, you must state in your annual certification that you have covered at least 75 percent of the surface area of the tank during all periods of electrolytic process operation.

(6) If you own or operate an affected tank or other affected plating and polishing operation that is subject to the management practices specified in § 63.11507(g), ''What are my standards and management practices?'' you must state in your annual compliance certification that you have implemented the applicable management practices, as practicable.

(7) Each annual compliance report must be prepared no later than January 31 of the year immediately following the reporting period and kept in a readily-accessible location for inspector review. If a deviation has occurred during the year, each annual compliance report must be submitted along with the deviation report, and postmarked or delivered no later than January 31 of the year immediately following the reporting period.

(d) If you own or operate an affected source, and any deviations from the compliance requirements specified in this subpart occurred during the year, you must report the deviations, along with the corrective action taken, and submit this report to the delegated authority.

(e) You must keep the records specified in paragraphs (e)(1) through (3) of this section.

(1) A copy of any Initial Notification and Notification of Compliance Status that you submitted and all documentation supporting those notifications.

(2) The records specified in § 63.10(b)(2)(i) through (iii) and (xiv) of the General Provisions of this part.

(3) The records required to show continuous compliance with each management practice and equipment standard that applies to you, as specified in § 63.11508(d), ''What are my compliance requirements?''

(f) You must keep each record for a minimum of 5 years following the date of each occurrence, measurement, maintenance, corrective action, report, or record. You must keep each record onsite for at least 2 years after the date of each occurrence, measurement, maintenance, corrective action, report, or record, according to § 63.10(b)(1) of the General Provisions to part 63. You may keep the records offsite for the remaining 3 years.

[73 FR 37741, July 1, 2008, as amended at 76 FR 57920, Sept. 19, 2011; 85 FR 73921, Nov. 19, 2020]

OTHER REQUIREMENTS AND INFORMATION

### § 63.11510 What General Provisions apply to this subpart?

If you own or operate a new or existing affected source, you must comply with the requirements of the General Provisions (40 CFR part 63, subpart A) according to Table 1 of this subpart.

### §63.11511 What definitions apply to this subpart?

Terms used in this subpart are defined in this section.

*Batch electrolytic process tank* means a tank used for an electrolytic process in which a part or group of parts, typically mounted on racks or placed in barrels, is placed in the tank and immersed in an electrolytic process solution as a single unit (i.e., as a batch) for a predetermined period of time, during which none of the parts are removed from the tank and no other parts are added to the tank, and after which the part or parts are removed from the tank as a unit.

*Bath* means the liquid contents of a tank, as defined in this section, which is used for electroplating, electroforming, electropolishing, or other metal coating processes at a plating and polishing facility.

*Bench-scale* means any operation that is small enough to be performed on a bench, table, or similar structure so that the equipment is not directly contacting the floor.

*Capture system* means the collection of components used to capture gases and fumes released from one or more emissions points and then convey the captured gas stream to a control device, as part of a complete control system. A capture system may include, but is not limited to, the following components as applicable to a given capture system design: duct intake devices, hoods, enclosures, ductwork, dampers, manifolds, plenums, and fans.

*Cartridge filter* means a type of control device that uses perforated metal cartridges containing a pleated paper or non-woven fibrous filter media to remove PM from a gas stream by sieving and other mechanisms. Cartridge filters can be designed with single use cartridges, which are removed and disposed after reaching capacity, or continuous use cartridges, which typically are cleaned by means of a pulse-jet mechanism.

*Composite* mesh pad means a type of control device similar to a mesh pad mist eliminator except that the device is designed with multiple pads in series that are woven with layers of material with varying fiber diameters, which produce a coalescing effect on the droplets or PM that impinge upon the pads.

*Continuous electrolytic process tank* means a tank that uses an electrolytic process and in which a continuous metal strip or other type of continuous substrate is fed into and removed from the tank continuously. This process is also called reel-to-reel electrolytic plating.

*Control device* means equipment that is part of a control system that collects and/or reduces the quantity of a pollutant that is emitted to the air. The control device receives emissions that are transported from the process by the capture system.

*Control system* means the combination of a capture system and a control device. The capture system is designed to collect and transport air emissions from the affected source to the control device. The overall control efficiency of any control system is a combination of the ability of the system to capture the air emissions (i.e., the capture efficiency) and the control device efficiency. Consequently, it is important to achieve good capture to ensure good overall control efficiency. Capture devices that are known to provide high capture efficiencies include hoods, enclosures, or any other duct intake devices with ductwork, dampers, manifolds, plenums, or fans.

*Conversion coatings* are coatings that form a hard metal finish on an object when the object is submerged in a tank bath or solution that contains the conversion coatings. Conversion coatings for the purposes of this rule include coatings composed of chromium, as well as the other plating and polishing metal HAP, where no electrical current is used.

*Cyanide plating* means plating processes performed in tanks that use cyanide as a major bath ingredient and that operate at pH of 12 or more, and use or emit any of the plating and polishing metal HAP, as defined in this section. Electroplating and electroforming are performed with or without cyanide. The cyanide in the bath works to dissolve the HAP metal added as a cyanide compound (e.g., cadmium cyanide) and creates free cyanide in solution, which helps to corrode

the anode. These tanks are self-regulating to a pH of 12 due to the caustic nature of the cyanide bath chemistry. The cyanide in the bath is a major bath constituent and not an additive; however, the self-regulating chemistry of the bath causes the bath to act as if wetting agents/fume suppressants are being used and to ensure an optimum plating process. All cyanide plating baths at pH greater than or equal to 12 have cyanide-metal complexes in solution. The metal HAP to be plated is not emitted because it is either bound in the metal-cyanide complex or reduced at the cathode to elemental metal, and plated onto the immersed parts. Cyanide baths are not intentionally operated at pH less 12 since unfavorable plating conditions would occur in the tank, among other negative effects.

*Deviation* means any instance in which an affected source or an owner or operator of such an affected source:

(1) Fails to meet any requirement or obligation established by this rule including, but not limited to, any equipment standard (including emissions and operating limits), management practice, or operation and maintenance requirement;

(2) Fails to meet any term or condition that is adopted to implement an applicable requirement in this rule and that is included in the operating permit for any affected facility required to obtain such a permit; or

(3) Fails to meet any equipment standard (including emission and operating limits), management standard, or operation and maintenance requirement in this rule during startup, shutdown, or malfunction.

*Dry mechanical polishing* means a process used for removing defects from and smoothing the surface of finished metals and formed products after plating or thermal spraying with any of the plating and polishing metal HAP, as defined in this section, using automatic or manually-operated machines that have hard-faced abrasive wheels or belts and where no liquids or fluids are used to trap the removed metal particles. The affected process does not include polishing with use of pastes, liquids, lubricants, or any other added materials.

*Electroforming* means an electrolytic process using or emitting any of the plating and polishing metal HAP, as defined in this section, that is used for fabricating metal parts. This process is essentially the same as electroplating except that the plated substrate (mandrel) is removed, leaving only the metal plate. In electroforming, the metal plate is self-supporting and generally thicker than in electroplating.

*Electroless plating* means a non-electrolytic process that uses or emits any of the plating and polishing metal HAP, as defined in this section, in which metallic ions in a plating bath or solution are reduced to form a metal coating at the surface of a catalytic substrate without the use of external electrical energy. Electroless plating is also called non-electrolytic plating. Examples include, but are not limited to, chromate conversion coating, nickel acetate sealing, sodium dichromate sealing, and manganese phosphate coating.

*Electrolytic plating processes* means electroplating and electroforming that use or emit any of the plating and polishing metal HAP, as defined in this section, where metallic ions in a plating bath or solution are reduced to form a metal coating on the surface of parts and products using electrical energy.

*Electroplating* means an electrolytic process that uses or emits any of the plating and polishing metal HAP, as defined in this section, in which metal ions in solution are reduced onto the surface of the work piece (the cathode) via an electrical current. The metal ions in the solution are usually replenished by the dissolution of metal from solid metal anodes fabricated of the same metal being plated, or by direct replenishment of the solution with metal salts or oxides; electroplating is also called electrolytic plating.

*Electropolishing* means an electrolytic process performed in a tank after plating that uses or emits any of the plating and polishing metal HAP, as defined in this section, in which a work piece is attached to an anode immersed in a bath, and the metal substrate is dissolved electrolytically, thereby removing the surface contaminant;

electropolishing is also called electrolytic polishing. For the purposes of this subpart, electropolishing does not include bench-scale operations.

*Fabric filter* means a type of control device used for collecting PM by filtering a process exhaust stream through a filter or filter media. A fabric filter is also known as a baghouse.

*Filters*, for the purposes of this part, include cartridge, fabric, or HEPA filters, as defined in this section.

*Flash electroplating* means an electrolytic process performed in a tank that uses or emits any of the plating and polishing metal HAP, as defined in this section, and that is used no more than 3 cumulative minutes per hour or no more than 1 cumulative hour per day.

*General Provisions of this part (40 CFR part 63, subpart A)* means the section of the Code of Federal Regulations (CFR) that addresses air pollution rules that apply to all HAP sources addressed in part 63, which includes the National Emission Standards for Hazardous Air Pollutants (NESHAP).

*HAP* means hazardous air pollutant as defined from the list of 188 chemicals and compounds specified in the CAA Amendments of 1990; HAP are also called ''air toxics.'' The five plating and polishing metal HAP, as defined in this section, are on this list of 188 chemicals.

*High efficiency particulate air (HEPA) filter* means a type of control device that uses a filter composed of a mat of randomly arranged fibers and is designed to remove at least 99.97 percent of airborne particles that are 0.3 micrometers or larger in diameter.

*Maintenance* is any process at a plating and polishing facility that is performed to keep the process equipment or the facility operating properly and is not performed on items to be sold as products.

*Major facility for HAP* is any facility that emits greater than 10 tpy of any HAP, or that emits a combined total of all HAP of over 25 tpy, where the HAP used to determine the total facility emissions are not restricted to only plating and polishing metal HAP or from only plating and polishing operations.

*Mesh pad mist eliminator* means a type of control device, consisting of layers of interlocked filaments densely packed between two supporting grids that remove liquid droplets and PM from the gas stream through inertial impaction and direct interception.

*Metal coating operation* means any process performed either in a tank that contains liquids or as part of a thermal spraying operation, that applies one or more plating and polishing metal HAP, as defined in this section, to the surface of parts and products used in manufacturing. These processes include but are not limited to: non-chromium electroplating; electroforming; electropolishing; non-electrolytic metal coating processes, such as chromate conversion coating, electroless nickel plating, nickel acetate sealing, sodium dichromate sealing, and manganese phosphate coating; and thermal or flame spraying.

*Metal HAP content of material used in plating and polishing* is the HAP content as determined from an analysis or engineering estimate of the HAP contents of the tank bath or solution, in the case of plating, metal coating, or electropolishing; or the HAP content of the metal coating being applied in the case of thermal spraying. Safety data sheet (SDS) information may be used in lieu of testing or engineering estimates but is not required to be used.

*New source* means any affected source for which you commenced construction or reconstruction after March 14, 2008.

*Non-cyanide electrolytic plating and electropolishing processes* means electroplating, electroforming, and electropolishing that uses or emits any of the plating and polishing metal HAP, as defined in this section, performed without cyanide in the tank. These processes do not use cyanide in the tank and operate at pH values less than 12. These processes use electricity and add or remove metals such as metal HAP from parts and products used in manufacturing. Both electroplating and electroforming can be performed with cyanide as well.

*Non-electrolytic plating* means a process that uses or emits any of the plating and polishing metal HAP, as defined in this section, in which metallic ions in a plating bath or solution are reduced to form a metal coating at the

surface of a catalytic substrate without the use of external electrical energy. Non-electrolytic plating is also called electroless plating. Examples include chromate conversion coating, nickel acetate sealing, electroless nickel plating, sodium dichromate sealing, and manganese phosphate coating.

*Packed-bed scrubber* means a type of control device that includes a single or double packed bed that contains packing media on which PM and droplets impinge and are removed from the gas stream. The packed-bed section of the scrubber is followed by a mist eliminator to remove any water entrained from the packed-bed section.

*Plating and polishing facility* means a facility engaged in one or more of the following processes that uses or emits any of the plating and polishing metal HAP, as defined in this section: electroplating processes other than chromium electroplating (*i.e.,* non-chromium electroplating); electroless plating; other non-electrolytic metal coating processes performed in a tank, such as chromate conversion coating, nickel acetate sealing, sodium dichromate sealing, and manganese phosphate coating; thermal spraying; and the dry mechanical polishing of finished metals and formed products after plating or thermal spraying. Plating is performed in a tank or thermally sprayed so that a metal coating is irreversibly applied to an object. Plating and polishing does not include any bench-scale processes.

*Plating and polishing metal HAP* means any compound of any of the following metals: cadmium, chromium, lead, manganese, and nickel, or any of these metals in the elemental form, with the exception of lead. Any material that does not contain cadmium, chromium, lead, or nickel in amounts greater than or equal to 0.1 percent by weight (as the metal), and does not contain manganese in amounts greater than or equal to 1.0 percent by weight (as the metal), as reported on the Material Safety Data Sheet for the material, is not considered to be a plating and polishing metal HAP.

*Plating and polishing process tanks* means any tank in which a process is performed at an affected plating and polishing facility that uses or has the potential to emit any of the plating and polishing metal HAP, as defined in this section. The processes performed in plating and polishing tanks include the following: electroplating processes other than chromium electroplating (*i.e.,* non-chromium electroplating) performed in a tank; electroless plating; and non-electrolytic metal coating processes, such as chromate conversion coating, nickel acetate sealing, sodium dichromate sealing, and manganese phosphate coating; and electropolishing. This term does not include tanks containing solutions that are used to clean, rinse or wash parts prior to placing the parts in a plating and polishing process tank, or subsequent to removing the parts from a plating and polishing process tank. This term also does not include any bench-scale operations.

*PM* means solid or particulate matter that is emitted into the air.

*Repair* means any process used to return a finished object or tool back to its original function or shape.

*Research and development process unit* means any process unit that is used for conducting research and development for new processes and products and is not used to manufacture products for commercial sale, except in a *de minimis* manner.

*Short-term plating* means an electroplating process that uses or emits any of the plating and polishing metal HAP, as defined in this section, and that is used no more than 3 cumulative minutes per hour or 1 hour cumulative per day.

*Startup of the tank bath* is when the components or relative proportions of the various components in the bath have been altered from the most recent operating period. Startup of the bath does not include events where only the tank's heating or agitation and other mechanical operations are turned back on after being turned off for a period of time.

*Tank cover* for batch process units means a solid structure made of an impervious material that is designed to cover the entire open surface of a tank or process unit that is used for plating or other metal coating processes.

*Tank cover* for continuous process units, means a solid structure or combination of structures, made of an impervious material that is designed to cover at least 75 percent of the open surface of the tank or process unit that is used for continuous plating or other continuous metal coating processes.

*Temporary thermal spraying* means a thermal spraying operation that uses or emits any of the plating and polishing metal HAP, as defined in this section, and that lasts no more than 1 hour in duration during any one day and is conducted in situ. Thermal spraying that is conducted in a dedicated thermal spray booth or structure is not considered to be temporary thermal spraying.

*Thermal spraying* (also referred to as metal spraying or flame spraying) is a process that uses or emits any of the plating and polishing metal HAP, as defined in this section, in which a metallic coating is applied by projecting heated, molten, or semi-molten metal particles onto a substrate. Commonly-used thermal spraying methods include high velocity oxy-fuel (HVOF) spraying, flame spraying, electric arc spraying, plasma arc spraying, and detonation gun spraying. This operation does not include spray painting at ambient temperatures.

*Water curtain* means a type of control device that draws the exhaust stream through a continuous curtain of moving water to scrub out suspended PM.

*Wetting agent/fume suppressant* means any chemical agent that reduces or suppresses fumes or mists from a plating and polishing tank by reducing the surface tension of the tank bath.

[73 FR 37741, July 1, 2008, as amended at 76 FR 57921, Sept. 19, 2011]

### § 63.11512 Who implements and enforces this subpart?

(a) This subpart can be implemented and enforced by EPA or a delegated authority such as your State, local, or tribal agency. If the EPA Administrator has delegated authority to your State, local, or tribal agency, then that agency, in addition to EPA, has the authority to implement and enforce this subpart. You should contact your EPA Regional Office to find out if implementation and enforcement of this subpart is delegated to your State, local, or tribal agency.

(b) In delegating implementation and enforcement authority of this subpart to a State, local, or tribal agency under 40 CFR part 63, subpart E, the authorities contained in paragraph (c) of this section are retained by the EPA Administrator and are not transferred to the State, local, or tribal agency.

(c) The authorities that cannot be delegated to State, local, or tribal agencies are specified in paragraphs (c)(1) through (5) of this section.

(1) Approval of an alternative non-opacity emissions standard under 40 CFR 63.6(g), of the General Provisions of this part.

(2) Approval of an alternative opacity emissions standard under § 63.6(h)(9), of the General Provisions of this part.

(3) Approval of a major change to test methods under § 63.7(e)(2)(ii) and (f), of the General Provisions of this part. A ''major change to test method'' is defined in § 63.90.

(4) Approval of a major change to monitoring under § 63.8(f), of the General Provisions of this part. A ''major change to monitoring'' is defined in § 63.90.

(5) Approval of a major change to recordkeeping and reporting under § 63.10(f), of the General Provisions of this part. A ''major change to recordkeeping/reporting'' is defined in § 63.90.

### § 63.11513 [Reserved]

TABLE 1 TO SUBPART WWWWWW OF PART 63—APPLICABILITY OF GENERAL PROVISIONS TO PLATING AND POLISHING AREA SOURCES

As required in § 63.11510, ''What General Provisions apply to this subpart?'', you must meet each requirement in the following table that applies to you.

| Citation | Subject |
|---|---|
| 63.1[1] | Applicability. |
| 63.2 | Definitions. |
| 63.3 | Units and abbreviations. |
| 63.4 | Prohibited activities. |
| 63.6(a), (b)(1)–(b)(5), (c)(1), (c)(2), (c)(5), and (j) | Compliance with standards and maintenance requirements. |
| 63.10(a), (b)(1), (b)(2)(i)–(iii), (xiv), (b)(3), (d)(1), (f) | Recordkeeping and reporting. |
| 63.12 | State authority and delegations. |
| 63.13 | Addresses of State air pollution control agencies and EPA regional offices. |
| 63.14 | Incorporation by reference. |
| 63.15 | Availability of information and confidentiality. |

[1] Section 63.11505(e), ''What parts of my plant does this subpart cover?'', exempts affected sources from the obligation to obtain title V operating permits.

[73 FR 37741, July 1, 2008, as amended at 76 FR 57922, Sept. 19, 2011]

## Subpart XXXXXX—National Emission Standards for Hazardous Air Pollutants Area Source Standards for Nine Metal Fabrication and Finishing Source Categories

SOURCE: 73 FR 43000, July 23, 2008, unless otherwise noted.

APPLICABILITY AND COMPLIANCE DATES

### § 63.11514 Am I subject to this subpart?

(a) You are subject to this subpart if you own or operate an area source that is primarily engaged in the operations in one of the nine source categories listed in paragraphs (a)(1) through (9) of this section. Descriptions of these source categories are shown in Table 1 of this subpart. ''Primarily engaged'' is defined in § 63.11522, ''What definitions apply to this subpart?''

(1) Electrical and Electronic Equipment Finishing Operations;

(2) Fabricated Metal Products;

(3) Fabricated Plate Work (Boiler Shops);

(4) Fabricated Structural Metal Manufacturing;

(5) Heating Equipment, except Electric;

(6) Industrial Machinery and Equipment Finishing Operations;

(7) Iron and Steel Forging;

(8) Primary Metal Products Manufacturing; and

(9) Valves and Pipe Fittings.

(b) The provisions of this subpart apply to each new and existing affected source listed and defined in paragraphs (b)(1) through (5) of this section if you use materials that contain or have the potential to emit metal fabrication or finishing metal HAP (MFHAP), defined to be the compounds of cadmium, chromium, lead, manganese, and nickel, or any of these metals in the elemental form with the exception of lead. Materials that contain MFHAP are defined to be materials that contain greater than 0.1 percent for carcinogens, as defined by OSHA at 29 CFR 1910.1200(d)(4), and greater than 1.0 percent for noncarcinogens. For the MFHAP, this corresponds to materials that contain cadmium, chromium, lead, or nickel in amounts greater than or equal to 0.1 percent by weight (of the metal), and materials that contain manganese in amounts greater than or equal to 1.0 percent by weight (of the metal), as shown in formulation data provided by the manufacturer or supplier, such as the Material Safety Data Sheet for the material.

(1) A dry abrasive blasting affected source is the collection of all equipment and activities necessary to perform dry abrasive blasting operations which use materials that contain MFHAP or that have the potential to emit MFHAP.

(2) A machining affected source is the collection of all equipment and activities necessary to perform machining operations which use materials that contain MFHAP, as defined in § 63.11522, ''What definitions apply to this subpart?'', or that have the potential to emit MFHAP.

(3) A dry grinding and dry polishing with machines affected source is the collection of all equipment and activities necessary to perform dry grinding

and dry polishing with machines operations which use materials that contain MFHAP, as defined in §63.11522, ''What definitions apply to this subpart?'', or have the potential to emit MFHAP.

(4) A spray painting affected source is the collection of all equipment and activities necessary to perform spray-applied painting operations using paints which contain MFHAP. A spray painting affected source includes all equipment used to apply cleaning materials to a substrate to prepare it for paint application (surface preparation) or to remove dried paint; to apply a paint to a substrate (paint application) and to dry or cure the paint after application; or to clean paint operation equipment (equipment cleaning). Affected source(s) subject to the requirements of this paragraph are not subject to the miscellaneous surface coating provisions of subpart HHHHHH of this part, ''National Emission Standards for Hazardous Air Pollutants: Paint Stripping and Miscellaneous Surface Coating Operations at Area Sources.''

(5) A welding affected source is the collection of all equipment and activities necessary to perform welding operations which use materials that contain MFHAP, as defined in §63.11522, ''What definitions apply to this subpart?'', or have the potential to emit MFHAP.

(c) An affected source is existing if you commenced construction or reconstruction of the affected source, as defined in §63.2, ''General Provisions'' to part 63, before April 3, 2008.

(d) An affected source is new if you commenced construction or reconstruction of the affected source, as defined in §63.2, ''General Provisions'' to part 63, on or after April 3, 2008.

(e) This subpart does not apply to research or laboratory facilities, as defined in section 112(c)(7) of the Clean Air Act (CAA).

(f) This subpart does not apply to tool or equipment repair operations, facility maintenance, or quality control activities as defined in §63.11522, ''What definitions apply to this subpart?''

(g) This subpart does not apply to operations performed on site at installations owned or operated by the Armed Forces of the United States (including the Coast Guard and the National Guard of any such state), the National Aeronautics and Space Administration, or the National Nuclear Security Administration.

(h) This subpart does not apply to operations that produce military munitions, as defined in §63.11522, ''What definitions apply to this subpart?'', manufactured by or for the Armed Forces of the United States (including the Coast Guard and the National Guard of any such state), or equipment directly and exclusively used for the purposes of transporting military munitions.

(i) You are exempt from the obligation to obtain a permit under 40 CFR part 70 or 40 CFR part 71, provided you are not otherwise required by law to obtain a permit under 40 CFR 70.3(a) or 40 CFR 71.3(a). Notwithstanding the previous sentence, you must continue to comply with the provisions of this subpart.

### §63.11515 What are my compliance dates?

(a) If you own or operate an existing affected source, you must achieve compliance with the applicable provisions in this subpart by July 25, 2011.

(b) If you own or operate a new affected source, you must achieve compliance with the applicable provisions in this subpart by July 23, 2008, or upon startup of your affected source, whichever is later.

## STANDARDS AND COMPLIANCE REQUIREMENTS

### §63.11516 What are my standards and management practices?

(a) *Dry abrasive blasting standards.* If you own or operate a new or existing dry abrasive blasting affected source, you must comply with the requirements in paragraphs (a)(1) through (3) of this section, as applicable, for each dry abrasive blasting operation that uses materials that contain MFHAP, as defined in §63.11522, ''What definitions apply to this subpart?'', or has the potential to emit MFHAP. These requirements do not apply when abrasive blasting operations are being performed that do not use any materials

containing MFHAP or do not have the potential to emit MFHAP.

(1) *Standards for dry abrasive blasting of objects performed in totally enclosed and unvented blast chambers.* If you own or operate a new or existing dry abrasive blasting affected source which consists of an abrasive blasting chamber that is totally enclosed and unvented, as defined in § 63.11522, ''What definitions apply to this subpart?'', you must implement management practices to minimize emissions of MFHAP. These management practices are the practices specified in paragraph (a)(1)(i) and (ii) of this section.

(i) You must minimize dust generation during emptying of abrasive blasting enclosures; and

(ii) You must operate all equipment associated with dry abrasive blasting operations according to the manufacturer's instructions.

(2) *Standards for dry abrasive blasting of objects performed in vented enclosures.* If you own or operate a new or existing dry abrasive blasting affected source which consists of a dry abrasive blasting operation which has a vent allowing any air or blast material to escape, you must comply with the requirements in paragraphs (a)(2)(i) and (ii) of this section. Dry abrasive blasting operations for which the items to be blasted exceed 8 feet (2.4 meters) in any dimension, may be performed subject to the requirements in paragraph (a)(3) of this section.

(i) You must capture emissions and vent them to a filtration control device. You must operate the filtration control device according to manufacturer's instructions, and you must demonstrate compliance with this requirement by maintaining a record of the manufacturer's specifications for the filtration control devices, as specified by the requirements in § 63.11519(c)(4), ''What are my notification, recordkeeping, and reporting requirements?''

(ii) You must implement the management practices to minimize emissions of MFHAP as specified in paragraphs (a)(2)(ii)(A) through (C) of this section.

(A) You must take measures necessary to minimize excess dust in the surrounding area to reduce MFHAP emissions, as practicable; and

(B) You must enclose dusty abrasive material storage areas and holding bins, seal chutes and conveyors that transport abrasive materials; and

(C) You must operate all equipment associated with dry abrasive blasting operations according to manufacturer's instructions.

(3) *Standards for dry abrasive blasting of objects greater than 8 feet (2.4 meters) in any one dimension.* If you own or operate a new or existing dry abrasive blasting affected source which consists of a dry abrasive blasting operation which is performed on objects greater than 8 feet (2.4 meters) in any one dimension, you may implement management practices to minimize emissions of MFHAP as specified in paragraph (a)(3)(i) of this section instead of the practices required by paragraph (a)(2) of this section. You must demonstrate that management practices are being implemented by complying with the requirements in paragraphs (a)(3)(ii) through (iv) of this section.

(i) Management practices for dry abrasive blasting of objects greater than 8 feet (2.4 meters) in any one dimension are specified in paragraphs (a)(3)(i)(A) through (E) of this section.

(A) You must take measures necessary to minimize excess dust in the surrounding area to reduce MFHAP emissions, as practicable; and

(B) You must enclose abrasive material storage areas and holding bins, seal chutes and conveyors that transport abrasive material; and

(C) You must operate all equipment associated with dry abrasive blasting operations according to manufacturer's instructions; and

(D) You must not re-use dry abrasive blasting media unless contaminants (i.e., any material other than the base metal, such as paint residue) have been removed by filtration or screening, and the abrasive material conforms to its original size; and

(E) Whenever practicable, you must switch from high particulate matter (PM)-emitting blast media (e.g., sand) to low PM-emitting blast media (e.g., crushed glass, specular hematite, steel shot, aluminum oxide), where PM is a surrogate for MFHAP.

(ii) You must perform visual determinations of fugitive emissions, as specified in §63.11517(b), ''What are my monitoring requirements?'', according to paragraphs (a)(3)(ii)(A) or (B) of this section, as applicable.

(A) For abrasive blasting of objects greater than 8 feet (2.4 meters) in any one dimension that is performed outdoors, you must perform visual determinations of fugitive emissions at the fenceline or property border nearest to the outdoor dry abrasive blasting operation.

(B) For abrasive blasting of objects greater than 8 feet (2.4 meters) in any one dimension that is performed indoors, you must perform visual determinations of fugitive emissions at the primary vent, stack, exit, or opening from the building containing the abrasive blasting operations.

(iii) You must keep a record of all visual determinations of fugitive emissions along with any corrective action taken in accordance with the requirements in §63.11519(c)(2), ''What are my notification, recordkeeping, and reporting requirements?''

(iv) If visible fugitive emissions are detected, you must perform corrective actions until the visible fugitive emissions are eliminated, at which time you must comply with the requirements in paragraphs (a)(3)(iv)(A) and (B) of this section.

(A) You must perform a follow-up inspection for visible fugitive emissions in accordance with §63.11517(a), ''Monitoring Requirements.''

(B) You must report all instances where visible emissions are detected, along with any corrective action taken and the results of subsequent follow-up inspections for visible emissions, with your annual certification and compliance report as required by §63.11519(b)(5), ''Notification, recordkeeping, and reporting requirements.''

(b) *Standards for machining.* If you own or operate a new or existing machining affected source, you must implement management practices to minimize emissions of MFHAP as specified in paragraph (b)(1) and (2) of this section for each machining operation that uses materials that contain MFHAP, as defined in §63.11522, ''What definitions apply to this subpart?'', or has the potential to emit MFHAP. These requirements do not apply when machining operations are being performed that do not use any materials containing MFHAP and do not have the potential to emit MFHAP.

(1) You must take measures necessary to minimize excess dust in the surrounding area to reduce MFHAP emissions, as practicable; and

(2) You must operate all equipment associated with machining according to manufacturer's instructions.

(c) *Standards for dry grinding and dry polishing with machines.* If you own or operate a new or existing dry grinding and dry polishing with machines affected source, you must comply with the requirements of paragraphs (c)(1) and (2) of this section for each dry grinding and dry polishing with machines operation that uses materials that contain MFHAP, as defined in §63.11522, ''What definitions apply to this subpart?'', or has the potential to emit MFHAP. These requirements do not apply when dry grinding and dry polishing operations are being performed that do not use any materials containing MFHAP and do not have the potential to emit MFHAP.

(1) You must capture emissions and vent them to a filtration control device. You must demonstrate compliance with this requirement by maintaining a record of the manufacturer's specifications for the filtration control devices, as specified by the requirements in §63.11519(c)(4), ''Notification, recordkeeping, and reporting Requirements.''

(2) You must implement management practices to minimize emissions of MFHAP as specified in paragraphs (c)(2)(i) and (ii) of this section.

(i) You must take measures necessary to minimize excess dust in the surrounding area to reduce MFHAP emissions, as practicable;

(ii) You must operate all equipment associated with the operation of dry grinding and dry polishing with machines, including the filtration control device, according to manufacturer's instructions.

(d) *Standards for control of MFHAP in spray painting.* If you own or operate a new or existing spray painting affected source, as defined in §63.11514 (b)(4),

''Am I subject to this subpart?,'' you must implement the management practices in paragraphs (d)(1) through (9) of this section when a spray-applied paint that contains MFHAP is being applied. These requirements do not apply when spray-applied paints that do not contain MFHAP are being applied.

(1) *Standards for spray painting for MFHAP control.* All spray-applied painting of objects must meet the requirements of paragraphs (d)(1)(i) through (iii) of this section. These requirements do not apply to affected sources located at Fabricated Structural Metal Manufacturing facilities, as described in Table 1, ''Description of Source Categories Affected by this Subpart,'' or affected sources that spray paint objects greater than 15 feet (4.57 meters), that are not spray painted in spray booths or spray rooms.

(i) Spray booths or spray rooms must have a full roof, at least two complete walls, and one or two complete side curtains or other barrier material so that all four sides are covered. The spray booths or spray rooms must be ventilated so that air is drawn into the booth and leaves only though the filter. The roof may contain narrow slots for connecting fabricated products to overhead cranes, and/or for cords or cables.

(ii) All spray booths or spray rooms must be fitted with a type of filter technology that is demonstrated to achieve at least 98 percent capture of MFHAP. The procedure used to demonstrate filter efficiency must be consistent with the American Society of Heating, Refrigerating, and Air-Conditioning Engineers (ASHRAE) Method 52.1, ''Gravimetric and Dust-Spot Procedures for Testing Air-Cleaning Devices Used in General Ventilation for Removing Particulate Matter, June 4, 1992'' (incorporated by reference, see § 63.14). The test coating for measuring filter efficiency shall be a high-solids bake enamel delivered at a rate of at least 135 grams per minute from a conventional (non-High Volume Low Pressure) air-atomized spray gun operating at 40 psi air pressure; the air flow rate across the filter shall be 150 feet per minute. Owners and operators may use published filter efficiency data provided by filter vendors to demonstrate compliance with this requirement and are not required to perform this measurement.

(iii) You must perform regular inspection and replacement of the filters in all spray booths or spray rooms according to manufacturer's instructions, and maintain documentation of these activities, as detailed in § 63.11519(c)(5), ''Notification, recordkeeping, and reporting requirements.''

(iv) As an alternative compliance requirement, spray booths or spray rooms equipped with a water curtain, called ''waterwash'' or ''waterspray'' booths or spray rooms that are operated and maintained according to the manufacturer's specifications and that achieve at least 98 percent control of MFHAP, may be used in lieu of the spray booths or spray rooms requirements of paragraphs (d)(1)(i) through (iii) of this section.

(2) *Standards for spray painting application equipment of all objects painted for MFHAP control.* All paints applied via spray-applied painting must be applied with a high-volume, low-pressure (HVLP) spray gun, electrostatic application, airless spray gun, air-assisted airless spray gun, or an equivalent technology that is demonstrated to achieve transfer efficiency comparable to one of these spray gun technologies for a comparable operation, and for which written approval has been obtained from the Administrator. The procedure used to demonstrate that spray gun transfer efficiency is equivalent to that of an HVLP spray gun must be equivalent to the California South Coast Air Quality Management District's ''Spray Equipment Transfer Efficiency Test Procedure for Equipment User, May 24, 1989'' and ''Guidelines for Demonstrating Equivalency with District Approved Transfer Efficient Spray Guns, September 26, 2002'', Revision 0 (incorporated by reference, see § 63.14).

(3) *Spray system recordkeeping.* You must maintain documentation of the HVLP or other high transfer efficiency spray paint delivery methods, as detailed in § 63.11519(c)(7), ''Notification, recordkeeping, and reporting requirements.''

(4) *Spray gun cleaning*. All cleaning of paint spray guns must be done with either non-HAP gun cleaning solvents, or in such a manner that an atomized mist of spray of gun cleaning solvent and paint residue is not created outside of a container that collects the used gun cleaning solvent. Spray gun cleaning may be done with, for example, by hand cleaning of parts of the disassembled gun in a container of solvent, by flushing solvent through the gun without atomizing the solvent and paint residue, or by using a fully enclosed spray gun washer. A combination of these non-atomizing methods may also be used.

(5) *Spray painting worker certification*. All workers performing painting must be certified that they have completed training in the proper spray application of paints and the proper setup and maintenance of spray equipment. The minimum requirements for training and certification are described in paragraph (d)(6) of this section. The spray application of paint is prohibited by persons who are not certified as having completed the training described in paragraph (d)(6) of this section. The requirements of this paragraph do not apply to the students of an accredited painting training program who are under the direct supervision of an instructor who meets the requirements of this paragraph. The requirements of this paragraph do not apply to operators of robotic or automated painting operations.

(6) *Spray painting training program content*. Each owner or operator of an affected spray painting affected source must ensure and certify that all new and existing personnel, including contract personnel, who spray apply paints are trained in the proper application of paints as required by paragraph (d)(5) of this section. The training program must include, at a minimum, the items listed in paragraphs (d)(6)(i) through (iii) of this section.

(i) A list of all current personnel by name and job description who are required to be trained;

(ii) Hands-on, or in-house or external classroom instruction that addresses, at a minimum, initial and refresher training in the topics listed in paragraphs (d)(6)(ii)(A) through (D) of this section.

(A) Spray gun equipment selection, set up, and operation, including measuring paint viscosity, selecting the proper fluid tip or nozzle, and achieving the proper spray pattern, air pressure and volume, and fluid delivery rate.

(B) Spray technique for different types of paints to improve transfer efficiency and minimize paint usage and overspray, including maintaining the correct spray gun distance and angle to the part, using proper banding and overlap, and reducing lead and lag spraying at the beginning and end of each stroke.

(C) Routine spray booth and filter maintenance, including filter selection and installation.

(D) Environmental compliance with the requirements of this subpart.

(iii) A description of the methods to be used at the completion of initial or refresher training to demonstrate, document, and provide certification of successful completion of the required training. Alternatively, owners and operators who can show by documentation or certification that a painter's work experience and/or training has resulted in training equivalent to the training required in paragraph (d)(6)(ii) of this section are not required to provide the initial training required by that paragraph to these painters.

(7) *Records of spray painting training*. You must maintain records of employee training certification for use of HVLP or other high transfer efficiency spray paint delivery methods as detailed in §63.11519(c)(8), ''Notification, recordkeeping, and reporting requirements.''

(8) *Spray painting training dates*. As required by paragraph (d)(5) of this section, all new and existing personnel at an affected spray painting affected source, including contract personnel, who spray apply paints must be trained by the dates specified in paragraphs (d)(8)(i) and (ii) of this section.

(i) If your source is a new source, all personnel must be trained and certified no later than January 20, 2009, 180 days after startup, or 180 days after hiring, whichever is later. Training that was completed within 5 years prior to the

date training is required, and that meets the requirements specified in paragraph (d)(6)(ii) of this section satisfies this requirement and is valid for a period not to exceed 5 years after the date the training is completed.

(ii) If your source is an existing source, all personnel must be trained and certified no later than July 25, 2011, or 180 days after hiring, whichever is later. Worker training that was completed within 5 years prior to the date training is required, and that meets the requirements specified in paragraph (d)(6)(ii) of this section, satisfies this requirement and is valid for a period not to exceed 5 years after the date the training is completed.

(9) *Duration of training validity*. Training and certification will be valid for a period not to exceed 5 years after the date the training is completed. All personnel must receive refresher training that meets the requirements of this section and be re-certified every 5 years.

(e) [Reserved]

(f) *Standards for welding*. If you own or operate a new or existing welding affected source, you must comply with the requirements in paragraphs (f)(1) and (2) of this section for each welding operation that uses materials that contain MFHAP, as defined in § 63.11522, ''What definitions apply to this subpart?'', or has the potential to emit MFHAP. If your welding affected source uses 2,000 pounds or more per year of welding rod containing one or more MFHAP (calculated on a rolling 12-month basis), you must demonstrate that management practices or fume control measures are being implemented by complying with the requirements in paragraphs (f)(3) through (8) of this section. The requirements in paragraphs (f)(1) through (8) of this section do not apply when welding operations are being performed that do not use any materials containing MFHAP or do not have the potential to emit MFHAP.

(1) You must operate all equipment, capture, and control devices associated with welding operations according to manufacturer's instructions. You must demonstrate compliance with this requirement by maintaining a record of the manufacturer's specifications for the capture and control devices, as specified by the requirements in § 63.11519(c)(4), ''Notification, recordkeeping, and reporting requirements.''

(2) You must implement one or more of the management practices specified in paragraphs (f)(2)(i) through (v) of this section to minimize emissions of MFHAP, as practicable, while maintaining the required welding quality through the application of sound engineering judgment.

(i) Use welding processes with reduced fume generation capabilities (e.g., gas metal arc welding (GMAW)—also called metal inert gas welding (MIG));

(ii) Use welding process variations (e.g., pulsed current GMAW), which can reduce fume generation rates;

(iii) Use welding filler metals, shielding gases, carrier gases, or other process materials which are capable of reduced welding fume generation;

(iv) Optimize welding process variables (e.g., electrode diameter, voltage, amperage, welding angle, shield gas flow rate, travel speed) to reduce the amount of welding fume generated; and

(v) Use a welding fume capture and control system, operated according to the manufacturer's specifications.

(3) *Tier 1 compliance requirements for welding*. You must perform visual determinations of welding fugitive emissions as specified in § 63.11517(b), ''Monitoring requirements,'' at the primary vent, stack, exit, or opening from the building containing the welding operations. You must keep a record of all visual determinations of fugitive emissions along with any corrective action taken in accordance with the requirements in § 63.11519(c)(2), ''Notification, recordkeeping, and reporting requirements.''

(4) *Requirements upon initial detection of visible emissions from welding*. If visible fugitive emissions are detected during any visual determination required in paragraph (f)(3) of this section, you must comply with the requirements in paragraphs (f)(4)(i) and (ii) of this section.

(i) Perform corrective actions that include, but are not limited to, inspection of welding fume sources, and evaluation of the proper operation and effectiveness of the management practices or fume control measures implemented in accordance with paragraph (f)(2) of this section. After completing such corrective actions, you must perform a follow-up inspection for visible fugitive emissions in accordance with §63.11517(a), ''Monitoring Requirements,'' at the primary vent, stack, exit, or opening from the building containing the welding operations.

(ii) Report all instances where visible emissions are detected, along with any corrective action taken and the results of subsequent follow-up inspections for visible emissions, and submit with your annual certification and compliance report as required by §63.11519(b)(5), ''Notification, recordkeeping, and reporting requirements.''

(5) *Tier 2 requirements upon subsequent detection of visible emissions.* If visible fugitive emissions are detected more than once during any consecutive 12 month period (notwithstanding the results of any follow-up inspections), you must comply with paragraphs (f)(5)(i) through (iv) of this section.

(i) Within 24 hours of the end of the visual determination of fugitive emissions in which visible fugitive emissions were detected, you must conduct a visual determination of emissions opacity, as specified in §63.11517(c), ''Monitoring requirements,'' at the primary vent, stack, exit, or opening from the building containing the welding operations.

(ii) In lieu of the requirement of paragraph (f)(3) of this section to perform visual determinations of fugitive emissions with EPA Method 22, you must perform visual determinations of emissions opacity in accordance with §63.11517(d), ''Monitoring Requirements,'' using EPA Method 9, at the primary vent, stack, exit, or opening from the building containing the welding operations.

(iii) You must keep a record of each visual determination of emissions opacity performed in accordance with paragraphs (f)(5)(i) or (ii) of this section, along with any subsequent corrective action taken, in accordance with the requirements in §63.11519(c)(3), ''Notification, recordkeeping, and reporting requirements.''

(iv) You must report the results of all visual determinations of emissions opacity performed in accordance with paragraphs (f)(5)(i) or (ii) of this section, along with any subsequent corrective action taken, and submit with your annual certification and compliance report as required by §63.11519(b)(6), ''Notification, recordkeeping, and reporting requirements.''

(6) *Requirements for opacities less than or equal to 20 percent but greater than zero.* For each visual determination of emissions opacity performed in accordance with paragraph (f)(5) of this section for which the average of the six-minute average opacities recorded is 20 percent or less but greater than zero, you must perform corrective actions, including inspection of all welding fume sources, and evaluation of the proper operation and effectiveness of the management practices or fume control measures implemented in accordance with paragraph (f)(2) of this section.

(7) *Tier 3 requirements for opacities exceeding 20 percent.* For each visual determination of emissions opacity performed in accordance with paragraph (f)(5) of this section for which the average of the six-minute average opacities recorded exceeds 20 percent, you must comply with the requirements in paragraphs (f)(7)(i) through (v) of this section.

(i) You must submit a report of exceedence of 20 percent opacity, along with your annual certification and compliance report, as specified in §63.11519(b)(8), ''Notification, recordkeeping, and reporting requirements,'' and according to the requirements of §63.11519(b)(1), ''Notification, recordkeeping, and reporting requirements.''

(ii) Within 30 days of the opacity exceedence, you must prepare and implement a Site-Specific Welding Emissions Management Plan, as specified in paragraph (f)(8) of this section. If you have already prepared a Site-Specific Welding Emissions Management Plan in accordance with this paragraph, you must prepare and implement a revised Site-Specific Welding Emissions Management Plan within 30 days.

(iii) During the preparation (or revision) of the Site-Specific Welding Emissions Management Plan, you must continue to perform visual determinations of emissions opacity, beginning on a daily schedule as specified in § 63.11517(d), ''Monitoring Requirements,'' using EPA Method 9, at the primary vent, stack, exit, or opening from the building containing the welding operations.

(iv) You must maintain records of daily visual determinations of emissions opacity performed in accordance with paragraph (f)(7)(iii) of this section, during preparation of the Site-Specific Welding Emissions Management Plan, in accordance with the requirements in § 63.11519(b)(9), ''Notification, recordkeeping, and reporting requirements.''

(v) You must include these records in your annual certification and compliance report, according to the requirements of § 63.11519(b)(1), ''Notification, recordkeeping, and reporting requirements.''

(8) *Site-Specific Welding Emissions Management Plan*. The Site-Specific Welding Emissions Management Plan must comply with the requirements in paragraphs (f)(8)(i) through (iii) of this section.

(i) Site-Specific Welding Emissions Management Plan must contain the information in paragraphs (f)(8)(i)(A) through (F) of this section.

(A) Company name and address;

(B) A list and description of all welding operations which currently comprise the welding affected source;

(C) A description of all management practices and/or fume control methods in place at the time of the opacity exceedence;

(D) A list and description of all management practices and/or fume control methods currently employed for the welding affected source;

(E) A description of additional management practices and/or fume control methods to be implemented pursuant to paragraph (f)(7)(ii) of this section, and the projected date of implementation; and

(F) Any revisions to a Site-Specific Welding Emissions Management Plan must contain copies of all previous plan entries, pursuant to paragraphs (f)(8)(i)(D) and (E) of this section.

(ii) The Site-Specific Welding Emissions Management Plan must be updated annually to contain current information, as required by paragraphs (f)(8)(i)(A) through (C) of this section, and submitted with your annual certification and compliance report, according to the requirements of § 63.11519(b)(1), ''Notification, recordkeeping, and reporting requirements.''

(iii) You must maintain a copy of the current Site-Specific Welding Emissions Management Plan in your records in a readily-accessible location for inspector review, in accordance with the requirements in § 63.11519(c)(12), ''Notification, recordkeeping, and reporting requirements.''

### § 63.11517 What are my monitoring requirements?

(a) *Visual determination of fugitive emissions, general*. Visual determination of fugitive emissions must be performed according to the procedures of EPA Method 22, of 40 CFR part 60, Appendix A–7. You must conduct the EPA Method 22 test while the affected source is operating under normal conditions. The duration of each EPA Method 22 test must be at least 15 minutes, and visible emissions will be considered to be present if they are detected for more than six minutes of the fifteen minute period.

(b) *Visual determination of fugitive emissions, graduated schedule*. Visual determinations of fugitive emissions must be performed in accordance with paragraph (a) of this section and according to the schedule in paragraphs (b)(1) through (4) of this section.

(1) *Daily Method 22 Testing*. Perform visual determination of fugitive emissions once per day, on each day the process is in operation, during operation of the process.

(2) *Weekly Method 22 Testing*. If no visible fugitive emissions are detected in consecutive daily EPA Method 22 tests, performed in accordance with paragraph (b)(1) of this section for 10 days of work day operation of the process, you may decrease the frequency of EPA Method 22 testing to once every five days of operation of the process (one calendar week). If visible fugitive

emissions are detected during these tests, you must resume EPA Method 22 testing of that operation once per day during each day that the process is in operation, in accordance with paragraph (b)(1) of this section.

(3) *Monthly Method 22 Testing*. If no visible fugitive emissions are detected in four consecutive weekly EPA Method 22 tests performed in accordance with paragraph (b)(2) of this section, you may decrease the frequency of EPA Method 22 testing to once per 21 days of operation of the process (one calendar month). If visible fugitive emissions are detected during these tests, you must resume weekly EPA Method 22 in accordance with paragraph (b)(2) of this section.

(4) *Quarterly Method 22 Testing*. If no visible fugitive emissions are detected in three consecutive monthly EPA Method 22 tests performed in accordance with paragraph (b)(3) of this section, you may decrease the frequency of EPA Method 22 testing to once per 60 days of operation of the process (3 calendar months). If visible fugitive emissions are detected during these tests, you must resume monthly EPA Method 22 in accordance with paragraph (b)(3) of this section.

(c) *Visual determination of emissions opacity for welding Tier 2 or 3, general*. Visual determination of emissions opacity must be performed in accordance with the procedures of EPA Method 9, of 40 CFR part 60, Appendix A–4, and while the affected source is operating under normal conditions. The duration of the EPA Method 9 test shall be thirty minutes.

(d) *Visual determination of emissions opacity for welding Tier 2 or 3, graduated schedule*. You must perform visual determination of emissions opacity in accordance with paragraph (c) of this section and according to the schedule in paragraphs (d)(1) through (5) of this section.

(1) *Daily Method 9 testing for welding, Tier 2 or 3*. Perform visual determination of emissions opacity once per day during each day that the process is in operation.

(2) *Weekly Method 9 testing for welding, Tier 2 or 3*. If the average of the six minute opacities recorded during any of the daily consecutive EPA Method 9 tests performed in accordance with paragraph (d)(1) of this section does not exceed 20 percent for 10 days of operation of the process, you may decrease the frequency of EPA Method 9 testing to once per five days of consecutive work day operation. If opacity greater than 20 percent is detected during any of these tests, you must resume testing every day of operation of the process according to the requirements of paragraph (d)(1) of this section.

(3) *Monthly Method 9 testing for welding Tier 2 or 3*. If the average of the six minute opacities recorded during any of the consecutive weekly EPA Method 9 tests performed in accordance with paragraph (d)(2) of this section does not exceed 20 percent for four consecutive weekly tests, you may decrease the frequency of EPA Method 9 testing to once per every 21 days of operation of the process. If visible emissions opacity greater than 20 percent is detected during any monthly test, you must resume testing every five days of operation of the process according to the requirements of paragraph (d)(2) of this section.

(4) *Quarterly Method 9 testing for welding Tier 2 or 3*. If the average of the six minute opacities recorded during any of the consecutive weekly EPA Method 9 tests performed in accordance with paragraph (d)(3) of this section does not exceed 20 percent for three consecutive monthly tests, you may decrease the frequency of EPA Method 9 testing to once per every 120 days of operation of the process. If visible emissions opacity greater than 20 percent is detected during any quarterly test, you must resume testing every 21 days (month) of operation of the process according to the requirements of paragraph (d)(3) of this section.

(5) *Return to Method 22 testing for welding, Tier 2 or 3*. If, after two consecutive months of testing, the average of the six minute opacities recorded during any of the monthly EPA Method 9 tests performed in accordance with paragraph (d)(3) of this section does not exceed 20 percent, you may resume EPA Method 22 testing as in paragraphs (b)(3) and (4) of this section. In lieu of this, you may elect to continue

performing EPA Method 9 tests in accordance with paragraphs (d)(3)and (4) of this section.

### § 63.11518 [Reserved]

### § 63.11519 What are my notification, recordkeeping, and reporting requirements?

(a) *What notifications must I submit?*—(1) *Initial notification.* If you are the owner or operator of an area source in one of the nine metal fabrication and finishing source categories, as defined in § 63.11514, you must submit the initial notification required by § 63.9(b), for a new affected source no later than 120 days after initial startup, or no later than 120 days after the source becomes subject to this subpart, or November 20, 2008, whichever is later. For an existing affected source, you must submit the initial notification no later than July 25, 2011, or 120 days after the source becomes subject to this subpart, whichever is later. Your initial notification must provide the information specified in paragraphs (a)(1)(i) through (iv) of this section.

(i) The name, address, phone number and e-mail address of the owner and operator;

(ii) The address (physical location) of the affected source;

(iii) An identification of the relevant standard (i.e., this subpart); and

(iv) A brief description of the type of operation. For example, a brief characterization of the types of products (e.g., aerospace components, sports equipment, etc.), the number and type of processes, and the number of workers usually employed.

(2) *Notification of compliance status.* If you are the owner or operator of an existing affected source, you must submit a notification of compliance status on or before November 22, 2011. If you are the owner or operator of a new affected source, you must submit a notification of compliance status within 120 days after initial startup, or by November 20, 2008, whichever is later. You are required to submit the information specified in paragraphs (a)(2)(i) through (iv) of this section with your notification of compliance status:

(i) Your company's name and address;

(ii) A statement by a responsible official with that official's name, title, phone number, e-mail address and signature, certifying the truth, accuracy, and completeness of the notification and a statement of whether the source has complied with all the relevant standards and other requirements of this subpart;

(iii) If you operate any spray painting affected sources, the information required by § 63.11516(e)(3)(vi)(C), ''Compliance demonstration,'' or § 63.11516(e)(4)(ix)(C), ''Compliance demonstration,'' as applicable; and

(iv) The date of the notification of compliance status.

(b) *What reports must I prepare or submit?*—(1) *Annual certification and compliance reports.* You must prepare and submit annual certification and compliance reports for each affected source according to the requirements of paragraphs (b)(2) through (7) of this section. The annual certification and compliance reporting requirements may be satisfied by reports required under other parts of the CAA, as specified in paragraph (b)(3) of this section.

(2) *Dates.* Unless the Administrator has approved or agreed to a different schedule for submission of reports under § 63.10(a), ''General Provisions,'' you must prepare and submit each annual certification and compliance report according to the dates specified in paragraphs (b)(2)(i) through (iii) of this section. Note that the information reported for each of the months in the reporting period will be based on the last 12 months of data prior to the date of each monthly calculation.

(i) The first annual certification and compliance report must cover the first annual reporting period which begins the day after the compliance date and ends on December 31.

(ii) Each subsequent annual certification and compliance report must cover the subsequent semiannual reporting period from January 1 through December 31.

(iii) Each annual certification and compliance report must be prepared and submitted no later than January 31 and kept in a readily-accessible location for inspector review. If an exceedence has occurred during the year, each annual certification and

compliance report must be submitted along with the exceedence reports, and postmarked or delivered no later than January 31.

(3) *Alternate dates*. For each affected source that is subject to permitting regulations pursuant to 40 CFR part 70 or 40 CFR part 71, ''Title V.''

(i) If the permitting authority has established dates for submitting annual reports pursuant to 40 CFR 70.6(a)(3)(iii)(A) or 40 CFR 71.6(a)(3)(iii)(A), ''Title V,'' you may prepare or submit, if required, the first and subsequent compliance reports according to the dates the permitting authority has established instead of according to the date specified in paragraph (b)(2)(iii) of this section.

(ii) If an affected source prepares or submits an annual certification and compliance report pursuant to this section along with, or as part of, the monitoring report required by 40 CFR 70.6(a)(3)(iii)(A) or 40 CFR 71.6(a)(3)(iii)(A), ''Title V,'' and the compliance report includes all required information concerning exceedences of any limitation in this subpart, its submission will be deemed to satisfy any obligation to report the same exceedences in the annual monitoring report. However, submission of an annual certification and compliance report shall not otherwise affect any obligation the affected source may have to report deviations from permit requirements to the permitting authority.

(4) *General requirements*. The annual certification and compliance report must contain the information specified in paragraphs (b)(4)(i) through (iii) of this section, and the information specified in paragraphs (b)(5) through (7) of this section that is applicable to each affected source.

(i) Company name and address;

(ii) Statement by a responsible official with that official's name, title, and signature, certifying the truth, accuracy, and completeness of the content of the report; and

(iii) Date of report and beginning and ending dates of the reporting period. The reporting period is the 12-month period ending on December 31. Note that the information reported for the 12 months in the reporting period will be based on the last 12 months of data prior to the date of each monthly calculation.

(5) *Visual determination of fugitive emissions requirements*. The annual certification and compliance report must contain the information specified in paragraphs (b)(5)(i) through (iii) of this section for each affected source which performs visual determination of fugitive emissions in accordance with §63.11517(a), ''Monitoring requirements.''

(i) The date of every visual determination of fugitive emissions which resulted in detection of visible emissions;

(ii) A description of the corrective actions taken subsequent to the test; and

(iii) The date and results of the follow-up visual determination of fugitive emissions performed after the corrective actions.

(6) *Visual determination of emissions opacity requirements*. The annual certification and compliance report must contain the information specified in paragraphs (b)(6)(i) through (iii) of this section for each affected source which performs visual determination of emissions opacity in accordance with §63.11517(c), ''Monitoring requirements.''

(i) The date of every visual determination of emissions opacity;

(ii) The average of the six-minute opacities measured by the test; and

(iii) A description of any corrective action taken subsequent to the test.

(7) [Reserved]

(8) *Exceedences of 20 percent opacity for welding affected sources*. As required by §63.11516(f)(7)(i), ''Requirements for opacities exceeding 20 percent,'' you must prepare an exceedence report whenever the average of the six-minute average opacities recorded during a visual determination of emissions opacity exceeds 20 percent. This report must be submitted along with your annual certification and compliance report according to the requirements in paragraph (b)(1) of this section, and must contain the information in paragraphs (b)(8)(iii)(A) and (B) of this section.

(A) The date on which the exceedence occurred; and

(B) The average of the six-minute average opacities recorded during the visual determination of emissions opacity.

(9) *Site-specific Welding Emissions Management Plan reporting.* You must submit a copy of the records of daily visual determinations of emissions recorded in accordance with § 63.11516(f)(7)(iv), ''Tier 3 requirements for opacities exceeding 20 percent,'' and a copy of your Site-Specific Welding Emissions Management Plan and any subsequent revisions to the plan pursuant to § 63.11516(f)(8), ''Site-specific Welding Emission Management Plan,'' along with your annual certification and compliance report, according to the requirements in paragraph (b)(1) of this section.

(c) *What records must I keep?* You must collect and keep records of the data and information specified in paragraphs (c)(1) through (13) of this section, according to the requirements in paragraph (c)(14) of this section.

(1) *General compliance and applicability records.* Maintain information specified in paragraphs (c)(1)(i) through (ii) of this section for each affected source.

(i) Each notification and report that you submitted to comply with this subpart, and the documentation supporting each notification and report.

(ii) Records of the applicability determinations as in § 63.11514(b)(1) through (5), ''Am I subject to this subpart,'' listing equipment included in its affected source, as well as any changes to that and on what date they occurred, must be maintained for 5 years and be made available for inspector review at any time.

(2) *Visual determination of fugitive emissions records.* Maintain a record of the information specified in paragraphs (c)(2)(i) through (iii) of this section for each affected source which performs visual determination of fugitive emissions in accordance with § 63.11517(a), ''Monitoring requirements.''

(i) The date and results of every visual determination of fugitive emissions;

(ii) A description of any corrective action taken subsequent to the test; and

(iii) The date and results of any follow-up visual determination of fugitive emissions performed after the corrective actions.

(3) *Visual determination of emissions opacity records.* Maintain a record of the information specified in paragraphs (c)(3)(i) through (iii) of this section for each affected source which performs visual determination of emissions opacity in accordance with § 63.11517(c), ''Monitoring requirements.''

(i) The date of every visual determination of emissions opacity; and

(ii) The average of the six-minute opacities measured by the test; and

(iii) A description of any corrective action taken subsequent to the test.

(4) Maintain a record of the manufacturer's specifications for the control devices used to comply with § 63.11516, ''What are my standards and management practices?''

(5) *Spray paint booth filter records.* Maintain a record of the filter efficiency demonstrations and spray paint booth filter maintenance activities, performed in accordance with § 63.11516(d)(1)(ii) and (iii), ''Requirements for spray painting objects in spray booths or spray rooms.''

(6) Waterspray booth or water curtain efficiency tests. Maintain a record of the water curtain efficiency demonstrations performed in accordance with § 63.11516(d)(1)(ii), ''Requirements for spray painting objects in spray booths or spray rooms.''

(7) *HVLP or other high transfer efficiency spray delivery system documentation records.* Maintain documentation of HVLP or other high transfer efficiency spray paint delivery systems, in compliance with § 63.11516(d)(3), ''Requirements for spray painting of all objects.'' This documentation must include the manufacturer's specifications for the equipment and any manufacturer's operation instructions. If you have obtained written approval for an alternative spray application system in accordance with § 63.11516(d)(2), ''Spray painting of all objects,'' you must maintain a record of that approval along with documentation of the demonstration of equivalency.

(8) *HVLP or other high transfer efficiency spray delivery system employee*

*training documentation records.* Maintain certification that each worker performing spray painting operations has completed the training specified in §63.11516(d)(6), ''Requirements for spray painting of all objects,'' with the date the initial training and the most recent refresher training was completed.

(9)–(10) [Reserved]

(11) *Visual determination of emissions opacity performed during the preparation (or revision) of the Site-Specific Welding Emissions Management Plan.* You must maintain a record of each visual determination of emissions opacity performed during the preparation (or revision) of a Site-Specific Welding Emissions Management Plan, in accordance with §63.11516(f)(7)(iii), ''Requirements for opacities exceeding 20 percent.''

(12) *Site-Specific Welding Emissions Management Plan.* If you have been required to prepare a plan in accordance with §63.11516(f)(7)(iii), ''Site-Specific Welding Emissions Management Plan,'' you must maintain a copy of your current Site-Specific Welding Emissions Management Plan in your records and it must be readily available for inspector review.

(13) *Manufacturer's instructions.* If you comply with this subpart by operating any equipment according to manufacturer's instruction, you must keep these instructions readily available for inspector review.

(14) Welding Rod usage. If you operate a new or existing welding affected source which is not required to comply with the requirements of §63.11516(f)(3) through (8) because it uses less than 2,000 pounds per year of welding rod (on a rolling 12-month basis), you must maintain records demonstrating your welding rod usage on a rolling 12-month basis.

(15) Your records must be maintained according to the requirements in paragraphs (c)(14)(i) through (iii) of this section.

(i) Your records must be in a form suitable and readily available for expeditious review, according to §63.10(b)(1), ''General Provisions.'' Where appropriate, the records may be maintained as electronic spreadsheets or as a database.

(ii) As specified in §63.10(b)(1), ''General Provisions,'' you must keep each record for 5 years following the date of each occurrence, measurement, corrective action, report, or record.

(iii) You must keep each record onsite for at least 2 years after the date of each occurrence, measurement, corrective action, report, or record according to §63.10(b)(1), ''General Provisions.'' You may keep the records offsite for the remaining 3 years.

[72 FR 73207, Dec. 26, 2007, as amended at 85 FR 73921, Nov. 19, 2020]

### §63.11520 [Reserved]

OTHER REQUIREMENTS AND INFORMATION

### §63.11521 Who implements and enforces this subpart?

(a) This subpart can be implemented and enforced by EPA or a delegated authority such as your state, local, or tribal agency. If the EPA Administrator has delegated authority to your state, local, or tribal agency, then that agency, in addition to EPA, has the authority to implement and enforce this subpart. You should contact your EPA Regional Office to find out if implementation and enforcement of this subpart is delegated to your state, local, or tribal agency.

(b) In delegating implementation and enforcement authority of this subpart to a state, local, or tribal agency under 40 CFR part 63, subpart E, the authorities contained in paragraph (c) of this section are retained by the EPA Administrator and are not transferred to the state, local, or tribal agency.

(c) The authorities that cannot be delegated to state, local, or tribal agencies are specified in paragraphs (c)(1) through (5) of this section.

(1) Approval of an alternative nonopacity emissions standard under §63.6(g), of the General Provisions of this part.

(2) Approval of an alternative opacity emissions standard under §63.6(h)(9), of the General Provisions of this part.

(3) Approval of a major change to test methods under §63.7(e)(2)(ii) and (f), of the General Provisions of this part. A ''major change to test method'' is defined in §63.90.

(4) Approval of a major change to monitoring under §63.8(f), of the General Provisions of this part. A ''major

change to monitoring'' under is defined in § 63.90.

(5) Approval of a major change to recordkeeping and reporting under § 63.10(f), of the General Provisions of this part. A ''major change to recordkeeping/reporting'' is defined in § 63.90.

### § 63.11522 What definitions apply to this subpart?

The terms used in this subpart are defined in the CAA; and in this section as follows:

*Adequate emission capture methods* are hoods, enclosures, or any other duct intake devices with ductwork, dampers, manifolds, plenums, or fans designed to draw greater than 85 percent of the airborne dust generated from the process into the control device.

*Capture system* means the collection of components used to capture gases and fumes released from one or more emissions points and then convey the captured gas stream to a control device or to the atmosphere. A capture system may include, but is not limited to, the following components as applicable to a given capture system design: duct intake devices, hoods, enclosures, ductwork, dampers, manifolds, plenums, and fans.

*Cartridge collector* means a type of control device that uses perforated metal cartridges containing a pleated paper or non-woven fibrous filter media to remove PM from a gas stream by sieving and other mechanisms. Cartridge collectors can be designed with single use cartridges, which are removed and disposed after reaching capacity, or continuous use cartridges, which typically are cleaned by means of a pulse-jet mechanism.

*Confined abrasive blasting enclosure* means an enclosure that includes a roof and at least two complete walls, with side curtains and ventilation as needed to insure that no air or PM exits the enclosure while dry abrasive blasting is performed. Apertures or slots may be present in the roof or walls to allow for mechanized transport of the blasted objects with overhead cranes, or cable and cord entry into the dry abrasive blasting chamber.

*Control device* means equipment installed on a process vent or exhaust system that reduces the quantity of a pollutant that is emitted to the air.

*Dry abrasive blasting* means cleaning, polishing, conditioning, removing or preparing a surface by propelling a stream of abrasive material with compressed air against the surface. Hydroblasting, wet abrasive blasting, or other abrasive blasting operations which employ liquids to reduce emissions are not dry abrasive blasting.

*Dry grinding and dry polishing with machines* means grinding or polishing without the use of lubricating oils or fluids in fixed or stationary machines. Hand grinding, hand polishing, and bench top dry grinding and dry polishing are not included under this definition.

*Fabric filter* means a type of control device used for collecting PM by filtering a process exhaust stream through a filter or filter media; a fabric filter is also known as a baghouse.

*Facility maintenance* means operations performed as part of the routine repair or renovation of process equipment, machinery, control equipment, and structures that comprise the infrastructure of the affected facility and that are necessary for the facility to function in its intended capacity. Facility maintenance also includes operations associated with the installation of new equipment or structures, and any processes as part of janitorial activities. Facility maintenance includes operations on stationary structures or their appurtenances at the site of installation, to portable buildings at the site of installation, to pavements, or to curbs. Facility maintenance also includes operations performed on mobile equipment, such as fork trucks, that are used in a manufacturing facility and which are maintained in that same facility. Facility maintenance does not include spray-applied coating of motor vehicles, mobile equipment, or items that routinely leave and return to the facility, such as delivery trucks, rental equipment, or containers used to transport, deliver, distribute, or dispense commercial products to customers, such as compressed gas canisters.

*Filtration control device* means a control device that utilizes a filter to reduce the emissions of MFHAP and other PM.

*Grinding* means a process performed on a workpiece to remove undesirable material from the surface or to remove burrs or sharp edges. Grinding is done using belts, disks, or wheels consisting of or covered with various abrasives.

*Machining* means dry metal turning, milling, drilling, boring, tapping, planing, broaching, sawing, cutting, shaving, shearing, threading, reaming, shaping, slotting, hobbing, and chamfering with machines. Shearing operations cut materials into a desired shape and size, while forming operations bend or conform materials into specific shapes. Cutting and shearing operations include punching, piercing, blanking, cutoff, parting, shearing and trimming. Forming operations include bending, forming, extruding, drawing, rolling, spinning, coining, and forging the metal. Processes specifically excluded are hand-held devices and any process employing fluids for lubrication or cooling.

*Material containing MFHAP* means a material containing one or more MFHAP. Any material that contains cadmium, chromium, lead, or nickel in amounts greater than or equal to 0.1 percent by weight (as the metal), and contains manganese in amounts greater than or equal to 1.0 percent by weight (as the metal), as shown in formulation data provided by the manufacturer or supplier, such as the Material Safety Data Sheet for the material, is considered to be a material containing MFHAP.

*Metal fabrication and finishing HAP (MFHAP)* means any compound of the following metals: Cadmium, chromium, lead, manganese, or nickel, or any of these metals in the elemental form, with the exception of lead.

*Metal fabrication and finishing source categories* are limited to the nine metal fabrication and finishing source categories with the activities described in Table 1, ''Description of Source Categories Affected by this Subpart.'' Metal fabrication or finishing operations means dry abrasive blasting, machining, spray painting, or welding in any one of the nine metal fabrication and finishing area source categories listed in Table 1, ''Description of Source Categories Affected by this Subpart.''

*Military munitions* means all ammunition products and components produced or used by or for the U.S. Department of Defense (DoD) or for the U.S. Armed Services for national defense and security, including military munitions under the control of the DoD, the U.S. Coast Guard, the National Nuclear Security Administration (NNSA), U.S. Department of Energy (DOE), and National Guard personnel. The term military munitions includes: Confined gaseous, liquid, and solid propellants, explosives, pyrotechnics, chemical and riot control agents, smokes, and incendiaries used by DoD components, including bulk explosives and chemical warfare agents, chemical munitions, biological weapons, rockets, guided and ballistic missiles, bombs, warheads, small arms ammunition, grenades, mines, torpedoes, depth charges, cluster munitions and dispensers, demolition charges, nonnuclear components of nuclear weapons, wholly inert ammunition products, and all devices and components of any items listed in this definition.

*Paint* means a material applied to a substrate for decorative, protective, or functional purposes. Such materials include, but are not limited to, paints, coatings, sealants, liquid plastic coatings, caulks, inks, adhesives, and maskants. Decorative, protective, or functional materials that consist only of protective oils for metal, acids, bases, or any combination of these substances, or paper film or plastic film which may be pre-coated with an adhesive by the film manufacturer, are not considered paints for the purposes of this subpart.

*Polishing with machines* means an operation which removes fine excess metal from a surface to prepare the surface for more refined finishing procedures prior to plating or other processes. Polishing may also be employed to remove burrs on castings or stampings. Polishing is performed using hard-faced wheels constructed of muslin, canvas, felt or leather, and typically employs natural or artificial abrasives. Polishing performed by hand without machines or in bench top operations are not considered polishing with machines for the purposes of this subpart.

*Primarily engaged* means the manufacturing, fabricating, or forging of one or more products listed in one of the nine metal fabrication and finishing source category descriptions in Table 1, ''Description of Source Categories Affected by this Subpart,'' where this production represents at least 50 percent of the production at a facility, and where production quantities are established by the volume, linear foot, square foot, or other value suited to the specific industry. The period used to determine production should be the previous continuous 12 months of operation. Facilities must document and retain their rationale for the determination that their facility is not ''primarily engaged'' pursuant to § 63.10(b)(3) of the General Provisions.

*Quality control activities* means operations that meet all of the following criteria:

(1) The activities are intended to detect and correct defects in the final product by selecting a limited number of samples from the operation, and comparing the samples against specific performance criteria.

(2) The activities do not include the production of an intermediate or final product for sale or exchange for commercial profit; for example, parts that are not sold and do not leave the facility.

(3) The activities are not a normal part of the operation;

(4) The activities do not involve fabrication of tools, equipment, machinery, and structures that comprise the infrastructure of the facility and that are necessary for the facility to function in its intended capacity; that is, the activities are not facility maintenance.

*Responsible official* means responsible official as defined in 40 CFR 70.2.

*Spray-applied painting* means application of paints using a hand-held device that creates an atomized mist of paint and deposits the paint on a substrate. For the purposes of this subpart, spray-applied painting does not include the following materials or activities:

(1) Paints applied from a hand-held device with a paint cup capacity that is less than 3.0 fluid ounces (89 cubic centimeters).

(2) Surface coating application using powder coating, hand-held, non-refillable aerosol containers, or non-atomizing application technology, including, but not limited to, paint brushes, rollers, hand wiping, flow coating, dip coating, electrodeposition coating, web coating, coil coating, touch-up markers, or marking pens.

(3) Painting operations that normally require the use of an airbrush or an extension on the spray gun to properly reach limited access spaces; the application of paints that contain fillers that adversely affect atomization with HVLP spray guns, and the application of paints that normally have a dried film thickness of less than 0.0013 centimeter (0.0005 in.).

(4) Thermal spray operations (also known as metallizing, flame spray, plasma arc spray, and electric arc spray, among other names) in which solid metallic or non-metallic material is heated to a molten or semi-molten state and propelled to the work piece or substrate by compressed air or other gas, where a bond is produced upon impact.

*Spray booth or spray room* means an enclosure with four sides and a roof where spray paint is prevented from leaving the booth during spraying by the enclosure. The roof of the spray booth or spray room may contain narrow slots for connecting the parts and products to overhead cranes, or for cord or cable entry into the spray booth or spray room.

*Tool or equipment repair* means equipment and devices used to repair or maintain process equipment or to prepare molds, dies, or other changeable elements of process equipment.

*Totally enclosed and unvented* means enclosed so that no air enters or leaves during operation.

*Totally enclosed and unvented dry abrasive blasting chamber* means a dry abrasive blasting enclosure which has no vents to the atmosphere, thus no emissions. A typical example of this sort of abrasive blasting enclosure is a small ''glove box'' enclosure, where the worker places their hands in openings or gloves that extend into the box and enable the worker to hold the objects as

they are being blasted without allowing air and blast material to escape the box.

*Vented dry abrasive blasting* means dry abrasive blasting where the blast material is moved by air flow from within the chamber to outside the chamber into the atmosphere or into a control device.

*Welding* means a process which joins two metal parts by melting the parts at the joint and filling the space with molten metal.

*Welding rod containing MFHAP* means a welding rod that contains cadmium, chromium, lead, or nickel in amounts greater than or equal to 0.1 percent by weight (as the metal), or that contains manganese in amounts greater than or equal to 1.0 percent by weight (as the metal), as shown in formulation data provided by the manufacturer or supplier, such as the Material Safety Data Sheet for the welding rod.

### § 63.11523 What General Provisions apply to this subpart?

The provisions in 40 CFR part 63, subpart A, applicable to sources subject to § 63.11514(a) are specified in Table 2 of this subpart.

TABLE 1 TO SUBPART XXXXXX OF PART 63—DESCRIPTION OF SOURCE CATEGORIES AFFECTED BY THIS SUBPART

| Metal fabrication and finishing source category | Description |
|---|---|
| Electrical and Electronic Equipment Finishing Operations. | Establishments primarily engaged in manufacturing motors and generators; and electrical machinery, equipment, and supplies, not elsewhere classified. The electrical machinery equipment and supplies industry sector of this source category includes establishments primarily engaged in high energy particle acceleration systems and equipment, electronic simulators, appliance and extension cords, bells and chimes, insect traps, and other electrical equipment and supplies not elsewhere classified. The motors and generators sector of this source category includes establishments primarily engaged in manufacturing electric motors (except engine starting motors) and power generators; motor generator sets; railway motors and control equipment; and motors, generators and control equipment for gasoline, electric, and oil-electric buses and trucks. |
| Fabricated Metal Products | Establishments primarily engaged in manufacturing fabricated metal products, such as fire or burglary resistive steel safes and vaults and similar fire or burglary resistive products; and collapsible tubes of thin flexible metal. Also, establishments primarily engaged in manufacturing powder metallurgy products, metal boxes; metal ladders; metal household articles, such as ice cream freezers and ironing boards; and other fabricated metal products not elsewhere classified. |
| Fabricated Plate Work (Boiler Shops) | Establishments primarily engaged in manufacturing power marine boilers, pressure and nonpressure tanks, processing and storage vessels, heat exchangers, weldments and similar products. |
| Fabricated Structural Metal Manufacturing | Establishments primarily engaged in fabricating iron and steel or other metal for structural purposes, such as bridges, buildings, and sections for ships, boats, and barges. |
| Heating Equipment, except Electric | Establishments primarily engaged in manufacturing heating equipment, except electric and warm air furnaces, including gas, oil, and stoker coal fired equipment for the automatic utilization of gaseous, liquid, and solid fuels. Products produced in this source category include low-pressure heating (steam or hot water) boilers, fireplace inserts, domestic (steam or hot water) furnaces, domestic gas burners, gas room heaters, gas infrared heating units, combination gas-oil burners, oil or gas swimming pool heaters, heating apparatus (except electric or warm air), kerosene space heaters, gas fireplace logs, domestic and industrial oil burners, radiators (except electric), galvanized iron nonferrous metal range boilers, room heaters (except electric), coke and gas burning salamanders, liquid or gas solar energy collectors, solar heaters, space heaters (except electric), mechanical (domestic and industrial) stokers, wood and coal-burning stoves, domestic unit heaters (except electric), and wall heaters (except electric). |

| Metal fabrication and finishing source category | Description |
|---|---|
| Industrial Machinery and Equipment Finishing Operations. | Establishments primarily engaged in construction machinery manufacturing; oil and gas field machinery manufacturing; and pumps and pumping equipment manufacturing. The construction machinery manufacturing industry sector of this source category includes establishments primarily engaged in manufacturing heavy machinery and equipment of types used primarily by the construction industries, such as bulldozers; concrete mixers; cranes, except industrial plant overhead and truck-type cranes; dredging machinery; pavers; and power shovels. Also establishments primarily engaged in manufacturing forestry equipment and certain specialized equipment, not elsewhere classified, similar to that used by the construction industries, such as elevating platforms, ship cranes, and capstans, aerial work platforms, and automobile wrecker hoists. The oil and gas field machinery manufacturing industry sector of this source category includes establishments primarily engaged in manufacturing machinery and equipment for use in oil and gas fields or for drilling water wells, including portable drilling rigs. The pumps and pumping equipment manufacturing sector of this source category includes establishments primarily engaged in manufacturing pumps and pumping equipment for general industrial, commercial, or household use, except fluid power pumps and motors. This category includes establishments primarily engaged in manufacturing domestic water and sump pumps. |
| Iron and Steel Forging | Establishments primarily engaged in the forging manufacturing process, where purchased iron and steel metal is pressed, pounded or squeezed under great pressure into high strength parts known as forgings. The forging process is different from the casting and foundry processes, as metal used to make forged parts is never melted and poured. |
| Primary Metals Products Manufacturing | Establishments primarily engaged in manufacturing products such as fabricated wire products (except springs) made from purchased wire. These facilities also manufacture steel balls; nonferrous metal brads and nails; nonferrous metal spikes, staples, and tacks; and other primary metals products not elsewhere classified. |
| Valves and Pipe Fittings | Establishments primarily engaged in manufacturing metal valves and pipe fittings; flanges; unions, with the exception of purchased pipes; and other valves and pipe fittings not elsewhere classified. |

TABLE 2 TO SUBPART XXXXXX OF PART 63—APPLICABILITY OF GENERAL PROVISIONS TO METAL FABRICATION OR FINISHING AREA SOURCES

*Instructions for Table 2*—As required in §63.11523, ''General Provisions Requirements,'' you must meet each requirement in the following table that applies to you.

| Citation | Subject |
|---|---|
| 63.1[1] | Applicability. |
| 63.2 | Definitions. |
| 63.3 | Units and abbreviations. |
| 63.4 | Prohibited activities. |
| 63.5 | Construction/reconstruction. |
| 63.6(a), (b)(1)–(b)(5), (c)(1), (c)(2), (c)(5), (g), (i), (j) | Compliance with standards and maintenance requirements. |
| 63.9(a)–(d) | Notification requirements. |
| 63.10(a), (b) except for (b)(2), (d)(1), (d)(4) | Recordkeeping and reporting. |
| 63.12 | State authority and delegations. |
| 63.13 | Addresses of State air pollution control agencies and EPA regional offices. |
| 63.14 | Incorporation by reference. |
| 63.15 | Availability of information and confidentiality. |
| 63.16 | Performance track provisions. |

[1] §63.11514(g), ''Am I subject to this subpart?'' exempts affected sources from the obligation to obtain title V operating permits.

## Subpart YYYYYY—National Emission Standards for Hazardous Air Pollutants for Area Sources: Ferroalloys Production Facilities

SOURCE: 73 FR 78643, Dec. 23, 2008, unless otherwise noted.

APPLICABILITY AND COMPLIANCE DATES

### §63.11524 Am I subject to this subpart?

(a) You are subject to this subpart if you own or operate a ferroalloys production facility that is an area source of hazardous air pollutant (HAP) emissions. A ferroalloys production facility

manufactures silicon metal, ferrosilicon, ferrotitanium using the aluminum reduction process, ferrovanadium, ferromolybdenum, calcium silicon, silicomanganese zirconium, ferrochrome silicon, silvery iron, high-carbon ferrochrome, charge chrome, standard ferromanganese, silicomanganese, ferromanganese silicon, calcium carbide or other ferroalloy products using electrometallurgical operations including electric arc furnaces (EAFs) or other reaction vessels.

(b) The provisions of this subpart apply to each existing and new electrometallurgical operation affected source as defined in paragraphs (b)(1) and (b)(2) of this section.

(1) An electrometallurgical operation affected source is existing if you commenced construction or reconstruction of the EAF or other reaction vessel on or before September 15, 2008.

(2) An electrometallurgical operation affected source is new if you commenced construction or reconstruction of the EAF or other reaction vessel after September 15, 2008.

(c) This subpart does not apply to research or laboratory facilities as defined in section 112(c)(7) of the Clean Air Act (CAA).

(d) You are exempt from the obligation to obtain a permit under 40 CFR part 70 or 40 CFR part 71, provided you are not otherwise required by law to obtain a permit under 40 CFR 70.3(a) or 40 CFR 71.3. Notwithstanding the previous sentence, you must continue to comply with the provisions of this subpart.

### § 63.11525 What are my compliance dates?

(a) If you own or operate an existing affected source, you must achieve compliance with the applicable provisions of this subpart by June 22, 2009.

(b) If you start up a new affected source on or before December 23, 2008, you must achieve compliance with the applicable provisions of this subpart by no later than December 23, 2008.

(c) If you start up a new affected source after December 23, 2008, you must achieve compliance with the applicable provisions of this subpart upon startup of your affected source.

## STANDARDS, MONITORING, AND COMPLIANCE REQUIREMENTS

### § 63.11526 What are the standards for new and existing ferroalloys production facilities?

(a) You must not discharge to the atmosphere visible emissions (VE) from the control device that exceed 5 percent of accumulated occurrences in a 60-minute observation period.

(b) You must not discharge to the atmosphere fugitive PM emissions from the furnace building containing the electrometallurgical operations that exhibit opacity greater than 20 percent (6-minute average), except for one 6-minute average per hour that does not exceed 60 percent.

### § 63.11527 What are the monitoring requirements for new and existing sources?

(a) *EAF equipped with fabric filters*—(1) *Visual monitoring*. You must conduct visual monitoring of the monovent or fabric filter outlet stack(s) for any VE according to the schedule specified in paragraphs (a)(1)(i) and (a)(1)(ii) of this section.

(i) *Daily visual monitoring*. Perform visual determination of fugitive emissions once per day, on each day the process is in operation, during operation of the process.

(ii) *Weekly visual monitoring*. If no visible fugitive emissions are detected in consecutive daily visual monitoring performed in accordance with paragraph (a)(1)(i) of this section for 90 days of operation of the process, you may decrease the frequency of visual monitoring to once per calendar week of time the process is in operation, during operation of the process. If visible fugitive emissions are detected during these inspections, you must resume daily visual monitoring of that operation during each day that the process is in operation, in accordance with paragraph (a)(1)(i) of this section until you satisfy the criteria of this section to resume conducting weekly visual monitoring.

(2) If the visual monitoring reveals the presence of any VE, you must conduct a Method 22 (appendix A–7 of 40

CFR part 60) test following the requirements of § 63.11528(b)(1) within 24 hours of determining the presence of any VE.

(3) If you own or operate an existing affected source, you may install, operate, and maintain a bag leak detection system for each fabric filter as an alternative to the monitoring requirements in paragraph (a)(1) of this section. If you own or operate a new affected source, you must install, operate, and maintain a bag leak detection system for each fabric filter according to the requirements in paragraphs (a)(3)(i) through (a)(3)(vii) of this section. Such source is not subject to the requirements in paragraphs (a)(1) and (a)(2) of this section.

(i) The system must be certified by the manufacturer to be capable of detecting emissions of PM at concentrations of 10 milligrams per actual cubic meter (0.00044 grains per actual cubic foot) or less.

(ii) The bag leak detection system sensor must provide output of relative PM loadings and the owner or operator shall continuously record the output from the bag leak detection system using a strip chart recorder, data logger, or other means.

(iii) The system must be equipped with an alarm that will sound when an increase in relative PM loadings is detected over the alarm set point established in the operation and maintenance plan, and the alarm must be located such that it can be heard, seen, or otherwise detected by the appropriate plant personnel.

(iv) The initial adjustment of the system must, at minimum, consist of establishing the baseline output by adjusting the sensitivity (range) and the averaging period of the device, and establishing the alarm set points. If the system is equipped with an alarm delay time feature, you also must establish a maximum reasonable alarm delay time.

(v) Following the initial adjustment, do not adjust the sensitivity or range, averaging period, alarm set point, or alarm delay time, except that, once per quarter, you may adjust the sensitivity of the bag leak detection system to account for seasonal effects including temperature and humidity.

(vi) For fabric filters that are discharged to the atmosphere through a stack, the bag leak detector sensor must be installed downstream of the fabric filter and upstream of any wet scrubber.

(vii) Where multiple detectors are required, the system's instrumentation and alarm may be shared among detectors.

(4) When operating a bag leak detection system, if an alarm sounds, conduct visual monitoring of the monovent or fabric filter outlet stack(s) as required in paragraph (a)(1) of this section within 1 hour. If the visual monitoring reveals the presence of any VE, you must conduct a Method 22 test following the requirements of § 63.11528(b)(1) within 24 hours of determining the presence of any VE.

(5) You must prepare a site-specific monitoring plan for each bag leak detection system. You must operate and maintain each bag leak detection system according to the plan at all times. Each plan must address all of the items identified in paragraphs (a)(5)(i) through (a)(5)(v)of this section.

(i) Installation of the bag leak detection system.

(ii) Initial and periodic adjustment of the bag leak detection system including how the alarm set-point and alarm delay time will be established.

(iii) Operation of the bag leak detection system including quality assurance procedures.

(iv) Maintenance of the bag leak detection system including a routine maintenance schedule and spare parts inventory list.

(v) How the bag leak detection system output will be recorded and stored.

(b) *EAF equipped with wet scrubbers*—(1) *Visual monitoring*. You must conduct visual monitoring of the wet scrubber outlet stack(s) for any VE according to the schedule specified in paragraphs (b)(1)(i) and (b)(1)(ii) of this section.

(i) *Daily visual monitoring*. Perform visual determination of fugitive emissions once per day, on each day the process is in operation, during operation of the process.

(ii) *Weekly visual monitoring*. If no visible fugitive emissions are detected in consecutive daily visual monitoring

performed in accordance with paragraph (b)(1)(i) of this section for 90 days of operation of the process, you may decrease the frequency of visual monitoring to once per calendar week of time the process is in operation, during operation of the process. If visible fugitive emissions are detected during these inspections, you must resume daily visual monitoring of that operation during each day that the process is in operation, in accordance with paragraph (b)(1)(i) of this section until you satisfy the criteria of this section to resume conducting weekly visual monitoring.

(2) If the visual monitoring reveals the presence of any VE, you must conduct a Method 22 (appendix A–7 of 40 CFR part 60) test following the requirements of §63.11528(b)(1) within 24 hours of determining the presence of any VE.

(3) If you own or operate an existing affected source, you may install, operate and maintain a continuous parameter monitoring system (CPMS) to measure and record the 3-hour average pressure drop and scrubber water flow rate as an alternative to the monitoring requirements specified in paragraph (b)(1) of this section. If you own or operate a new sealed EAF affected source, you must install, operate, and maintain a CPMS for each wet scrubber. Such source is not subject to the requirements in paragraph (b)(1) of this section.

(4) When operating a CPMS, if the 3-hour average pressure drop or scrubber water flow rate is below the minimum levels that indicate normal operation of the control device, conduct visual monitoring of the outlet stack(s) as required by paragraph (b)(1) of this section within 1 hour of determining that the 3-hour average parameter value is below the required minimum levels. Manufacturer's specifications for pressure drop and liquid flow rate will be used to determine normal operations. If the visual monitoring reveals the presence of any VE, you must conduct a Method 22 (appendix A–7 of 40 CFR part 60) test following the requirements of §63.11528(b)(1) within 24 hours of determining the presence of any VE.

**§63.11528 What are the performance test and compliance requirements for new and existing sources?**

(a) *Initial compliance demonstration deadlines.* You must conduct an initial Method 22 (appendix A–7 of 40 CFR part 60) test following the requirements of paragraph (b)(1) of this section of each existing electrometallurgical operation control device and an initial Method 9 observation following the requirements of paragraph (c)(1) of this section from the furnace building due to electrometallurgical operations no later than 60 days after your applicable compliance date. For any new electrometallurgical operation control device, you must conduct an initial Method 22 test following the requirements of paragraph (b)(1) of this section within 15 days of startup of the control device.

(b) *Visible emissions limit compliance demonstration.* (1) You must conduct a Method 22 (appendix A–7 of 40 CFR part 60) test to determine that VE from the control device do not exceed the emission standard specified in §63.11526(a). For a fabric filter, conduct the test for at least 60 minutes at the fabric filter monovent or outlet stack(s), as applicable. For a wet scrubber, conduct the test for at least 60 minutes at the outlet stack(s).

(2) You must conduct a semiannual Method 22 test using the procedures specified in paragraph (b)(1) of this section.

(c) *Furnace building opacity.* (1) You must conduct an opacity test for fugitive emissions from the furnace building according to the procedures in §63.6(h) and Method 9 (appendix A–4 of 40 CFR part 60). The test must be conducted for at least 60 minutes and shall include tapping the furnace or reaction vessel. The observation must be focused on the part of the building where electrometallurgical operation fugitive emissions are most likely to be observed.

(2) Conduct subsequent Method 9 tests no less frequently than every 6 months and each time you make a process change likely to increase fugitive emissions.

(3) After the initial Method 9 performance test, as an alternative to the Method 9 performance test, you may

monitor VE using Method 22 (appendix A–7 of 40 CFR part 60) for subsequent semi-annual compliance demonstrations. The Method 22 test is successful if no VE are observed for 90 percent of the readings over the furnace cycle (tap to tap) or 60 minutes, whichever is longer. If VE are observed greater than 10 percent of the time over the furnace cycle or 60 minutes, whichever is longer, then the facility must conduct another test as soon as possible, but no later than 15 calendar days after the Method 22 test using Method 9 (appendix A–4 of 40 CFR part 60) as specified in paragraph (c)(1) of this section.

### § 63.11529 What are the notification, reporting, and recordkeeping requirements?

(a) *Initial Notification*. You must submit the Initial Notification required by § 63.9(b)(2) no later than 120 days after December 23, 2008, or no later than 120 days after the source becomes subject to this subpart, whichever is later. The Initial Notification must include the information specified in § 63.9(b)(2)(i) through (iv).

(b) *Notification of compliance status*. You must submit a Notification of Compliance Status in accordance with § 63.9(h) of the General Provisions before the close of business on the 30th day following the completion of the initial compliance demonstration. This notification must include the following:

(1) The results of Method 22 (appendix A–7 of 40 CFR part 60) test for VE as required by § 63.11528(a);

(2) If you have installed a bag leak detection system, documentation that the system satisfies the design requirements specified in § 63.11527(a)(3) and that you have prepared a site-specific monitoring plan that meets the requirements specified in § 63.11527(a)(5);

(3) The results of the Method 9 (appendix A–4 of 40 CFR part 60) test for building opacity as required by § 63.11528(a).

(c) *Annual compliance certification*. If you own or operate an affected source, you must submit an annual certification of compliance according to paragraphs (c)(1) through (c)(4) of this section.

(1) The results of any daily or weekly visual monitoring events required by § 63.11527(a)(1) and (b)(1), alarm-based visual monitoring at sources equipped with bag leak detection systems as required by § 63.11527(a)(4), or readings outside of the operating range at sources using CPMS on wet scrubbers required by § 63.11527(b)(4).

(2) The results of the follow up Method 22 (appendix A–7 of 40 CFR part 60) tests that are required if VE are observed during the daily or weekly visual monitoring, alarm-based visual monitoring, or out-of-range operating readings as described in paragraph (c)(1) of this section.

(3) The results of the Method 22 (appendix A–7 of 40 CFR part 60) or Method 9 (appendix A–4 of 40 CFR part 60) tests required by § 63.11528(b) and (c), respectively.

(4) If you operate a bag leak detection system for a fabric filter or a CPMS for a wet scrubber, submit annual reports according to the requirements in § 63.10(e) and include summary information on the number, duration, and cause (including unknown cause, if applicable) for monitor downtime incidents (other than downtime associated with zero and span or other calibration checks, if applicable).

(d) You must keep the records specified in paragraphs (d)(1) through (d)(2) of this section.

(1) As required in § 63.10(b)(2)(xiv), you must keep a copy of each notification that you submitted to comply with this subpart and all documentation supporting any Initial Notification, Notification of Compliance Status, and annual compliance certifications that you submitted.

(2) You must keep the records of all daily or weekly visual, Method 22 (appendix A–7 of 40 CFR part 60), and Method 9 (appendix A–4 of 40 CFR part 60) monitoring data required by § 63.11527 and the information identified in paragraphs (d)(2)(i) through (d)(2)(v) of this section.

(i) The date, place, and time of the monitoring event;

(ii) Person conducting the monitoring;

(iii) Technique or method used;

(iv) Operating conditions during the activity; and

(v) Results, including the date, time, and duration of the period from the time the monitoring indicated a problem (e.g., VE) to the time that monitoring indicated proper operation.

(e) Your records must be in a form suitable and readily available for expeditious review, according to § 63.10(b)(1).

(f) As specified in § 63.10(b)(1), you must keep each record for 5 years following the date of each recorded action.

(g) You must keep each record onsite for at least 2 years after the date of each recorded action according to § 63.10(b)(1). You may keep the records offsite for the remaining 3 years.

[73 FR 78643, Dec. 23, 2008, as amended at 85 FR 73921, Nov. 19, 2020]

OTHER REQUIREMENTS AND INFORMATION

### § 63.11530 What parts of the General Provisions apply to my facility?

Table 1 of this subpart shows which parts of the General Provisions in §§ 63.1 through 63.16 apply to you.

### § 63.11531 Who implements and enforces this subpart?

(a) This subpart can be implemented and enforced by EPA or a delegated authority such as your State, local, or tribal agency. If the EPA Administrator has delegated authority to your State, local, or tribal agency, then that agency has the authority to implement and enforce this subpart. You should contact your EPA Regional Office to find out if implementation and enforcement of this subpart is delegated to your State, local, or tribal agency.

(b) In delegating implementation and enforcement authority of this subpart to a State, local, or tribal agency under 40 CFR part 63, subpart E, the authorities contained in paragraph (c) of this section are retained by the EPA Administrator and are not transferred to the State, local, or tribal agency.

(c) The authorities that cannot be delegated to State, local, or tribal agencies are specified in paragraphs (c)(1) through (5) of this section.

(1) Approval of an alternative non-opacity emissions standard under § 63.6(g).

(2) Approval of an alternative opacity emissions standard under § 63.6(h)(9).

(3) Approval of a major change to test methods under § 63.7(e)(2)(ii) and (f). A ''major change to test method'' is defined in § 63.90.

(4) Approval of a major change to monitoring under § 63.8(f). A ''major change to monitoring'' under is defined in § 63.90.

(5) Approval of a major change to recordkeeping and reporting under § 63.10(f). A ''major change to recordkeeping/reporting'' is defined in § 63.90.

### § 63.11532 What definitions apply to this subpart?

Terms used in this subpart are defined in the CAA, in § 63.2, and in this section.

*Bag leak detection system* means a system that is capable of continuously monitoring relative PM (i.e., dust) loadings in the exhaust of a fabric filter to detect bag leaks and other upset conditions. A bag leak detection system includes, but is not limited to, an instrument that operates on triboelectric, electrodynamic, light scattering, or other effect to monitor relative PM loadings continuously.

*Capture system* means the collection of components used to capture gases and fumes released from one or more emissions points and then convey the captured gas stream to a control device or to the atmosphere. A capture system may include, but is not limited to, the following components as applicable to a given capture system design: Duct intake devices, hoods, enclosures, ductwork, dampers, manifolds, plenums, and fans.

*Charging* means introducing materials to an EAF or other reaction vessel, which may consist of, but are not limited to, ores, slag, carbonaceous material, and/or limestone.

*Control device* means the air pollution control equipment used to remove PM from the effluent gas stream generated by an EAF furnace or other reaction vessel.

*Electric arc furnace* means any furnace wherein electrical energy is converted to heat energy by transmission of current between electrodes partially submerged in the furnace charge.

*Electrometallurgical operations* means the use of electric and electrolytic processes to purify metals or reduce metallic compounds to metals.

*Fugitive emissions* means any pollutant released to the atmosphere that is not discharged through a ventilation system that is specifically designed to capture pollutants at the source, convey them through ductwork, and exhausts them from a control device. Fugitive emissions include pollutants released to the atmosphere through windows, doors, vents, or other building openings. Fugitive emissions also include pollutants released to the atmosphere through other general building ventilation or exhaust systems not specifically designed to capture pollutants at the source.

*Sealed EAF* means a furnace equipped with the cover with seals around the electrodes and outer edges of the cover to eliminate air being drawn in under the cover.

*Tapping* means the removal of product from the EAF or other reaction vessel under normal operating conditions, such as removal of metal under normal pressure and movement by gravity down the spout into the ladle.

**§§ 63.11533–63.11543 [Reserved]**

TABLE 1 TO SUBPART YYYYYY OF PART 63—APPLICABILITY OF GENERAL PROVISIONS

As required in § 63.11530, you must meet each requirement in the following table that applies to you.

| Citation | Subject |
|---|---|
| 63.1[1] | Applicability. |
| 63.2 | Definitions. |
| 63.3 | Units and abbreviations. |
| 63.4 | Prohibited activities. |
| 63.5 | Construction/reconstruction. |
| 63.6 | Compliance with standards and maintenance. |
| 63.8 | Monitoring. |
| 63.9 | Notification. |
| 63.10 | Recordkeeping and reporting. |
| 63.12 | State authority and delegations. |
| 63.13 | Addresses of State air pollution control agencies and EPA regional offices. |
| 63.14 | Incorporation by reference. |
| 63.15 | Availability of information and confidentiality. |
| 63.16 | Performance track provisions. |

[1] § 63.11524(d), ''Am I subject to this subpart?'' exempts affected sources from the obligation to obtain title V operating permits.

## Subpart ZZZZZZ—National Emission Standards for Hazardous Air Pollutants: Area Source Standards for Aluminum, Copper, and Other Nonferrous Foundries

SOURCE: 74 FR 30393, June 25, 2009, unless otherwise noted.

APPLICABILITY AND COMPLIANCE DATES

### § 63.11544 Am I subject to this subpart?

(a) You are subject to this subpart if you own or operate an aluminum foundry, copper foundry, or other nonferrous foundry as defined in § 63.11556, ''What definitions apply to this subpart?'' that is an area source of hazardous air pollutant (HAP) emissions as defined in § 63.2 and meets the criteria specified in paragraphs (a)(1) through (4) of this section. Once you are subject to this subpart, you must remain subject to this subpart even if you subsequently do not meet the criteria in paragraphs (a)(1) through (4) of this section.

(1) Your aluminum foundry uses material containing aluminum foundry HAP, as defined in § 63.11556, ''What definitions apply to this subpart?''; or

(2) Your copper foundry uses material containing copper foundry HAP, as defined in § 63.11556, ''What definitions apply to this subpart?''; or

(3) Your other nonferrous foundry uses material containing other nonferrous foundry HAP, as defined in § 63.11556, ''What definitions apply to this subpart?''.

(4) Your aluminum foundry, copper foundry, or other nonferrous foundry has an annual metal melt production (for existing affected sources) or an annual metal melt capacity (for new affected sources) of at least 600 tons per year (tpy) of aluminum, copper, and other nonferrous metals, including all associated alloys. You must determine the annual metal melt production and capacity for the time period as described in paragraphs (a)(4)(i) through

(iv) of this section. The quantity of ferrous metals melted in iron or steel melting operations and the quantity of nonferrous metal melted in non-foundry melting operations are not included in determining the annual metal melt production for existing affected sources or the annual metal melt capacity for new affected sources.

(i) If you own or operate a melting operation at an aluminum, copper or other nonferrous foundry as of February 9, 2009, you must determine if you are subject to this rule based on your facility's annual metal melt production for calendar year 2010.

(ii) If you construct or reconstruct a melting operation at an aluminum, copper or other nonferrous foundry after February 9, 2009, you must determine if you are subject to this rule based on your facility's annual metal melt capacity at startup.

(iii) If your foundry with an existing melting operation increases production after calendar year 2010 such that the annual metal melt production equals or exceeds 600 tpy, you must submit a written notification of applicability to the Administrator within 30 days after the end of the calendar year and comply within 2 years after the date of the notification.

(iv) If your foundry with a new melting operation increases capacity after startup such that the annual metal melt capacity equals or exceeds 600 tpy, you must submit a written notification of applicability to the Administrator within 30 days after the capacity increase year and comply at the time of the capacity increase.

(b) This subpart applies to each new or existing affected source located at an aluminum, copper or other nonferrous foundry that is an area source as defined by §63.2. The affected source is the collection of all melting operations located at an aluminum, copper, or other nonferrous foundry.

(c) An affected source is an existing source if you commenced construction or reconstruction of the affected source on or before February 9, 2009.

(d) An affected source is a new source if you commenced construction or reconstruction of the affected source after February 9, 2009.

(e) This subpart does not apply to research or laboratory facilities, as defined in section 112(c)(7) of the Clean Air Act.

(f) You are exempt from the obligation to obtain a permit under 40 CFR part 70 or 40 CFR part 71, provided you are not otherwise required to obtain a permit under 40 CFR 70.3(a) or 40 CFR 71.3(a) for a reason other than your status as an area source under this subpart. Notwithstanding the previous sentence, you must continue to comply with the provisions of this subpart applicable to area sources.

[74 FR 30393, June 25, 2009, as amended at 74 FR 46495, Sept. 10, 2009]

### §63.11545 What are my compliance dates?

(a) If you own or operate an existing affected source, you must achieve compliance with the applicable provisions of this subpart no later than June 27, 2011.

(b) If you start up a new affected source on or before June 25, 2009, you must achieve compliance with the provisions of this subpart no later than June 25, 2009.

(c) If you start up a new affected source after June 25, 2009, you must achieve compliance with the provisions of this subpart upon startup of your affected source.

## STANDARDS AND COMPLIANCE REQUIREMENTS

### §63.11550 What are my standards and management practices?

(a) If you own or operate new or existing affected sources at an aluminum foundry, copper foundry, or other nonferrous foundry that is subject to this subpart, you must comply with the requirements in paragraphs (a)(1) through (3) of this section.

(1) Cover or enclose each melting furnace that is equipped with a cover or enclosure during the melting operation to the extent practicable (e.g., except when access is needed; including, but not limited to charging, alloy addition, and tapping).

(2) Purchase only metal scrap that has been depleted (to the extent practicable) of aluminum foundry HAP,

copper foundry HAP, or other nonferrous foundry HAP (as applicable) in the materials charged to the melting furnace, except metal scrap that is purchased specifically for its HAP metal content for use in alloying or to meet specifications for the casting. This requirement does not apply to material that is not scrap (e.g., ingots, alloys, sows) or to materials that are not purchased (e.g., internal scrap, customer returns).

(3) Prepare and operate pursuant to a written management practices plan. The management practices plan must include the required management practices in paragraphs (a)(1) and (2) of this section and may include any other management practices that are implemented at the facility to minimize emissions from melting furnaces. You must inform your appropriate employees of the management practices that they must follow. You may use your standard operating procedures as the management practices plan provided the standard operating procedures include the required management practices in paragraphs (a)(1) and (2) of this section.

(b) If you own or operate a new or existing affected source that is located at a large foundry as defined in § 63.11556, you must comply with the additional requirements in paragraphs (b)(1) and (2) of this section.

(1) For existing affected sources located at a large foundry, you must achieve a particulate matter (PM) control efficiency of at least 95.0 percent or emit no more than an outlet PM concentration limit of 0.034 grams per dry standard cubic meter (g/dscm) (0.015 grains per dry standard cubic feet (gr/dscf)).

(2) For new affected sources located at a large foundry, you must achieve a PM control efficiency of at least 99.0 percent or emit no more than an outlet PM concentration limit of at most 0.023 g/dscm (0.010 gr/dscf).

(c) If you own or operate an affected source at a small foundry that subsequently becomes a large foundry after the applicable compliance date, you must meet the requirements in paragraphs (c)(1) through (3) of this section.

(1) You must notify the Administrator within 30 days after the capacity increase or the production increase, whichever is appropriate;

(2) You must modify any applicable permit limits within 30 days after the capacity increase or the production increase to reflect the current production or capacity, if not done so prior to the increase;

(3) You must comply with the PM control requirements in paragraph (b) of this section no later than 2 years from the date of issuance of the permit for the capacity increase or production increase, or in the case of no permit issuance, the date of the increase in capacity or production, whichever occurs first.

(d) These standards apply at all times.

### § 63.11551 What are my initial compliance requirements?

(a) Except as specified in paragraph (b) of this section, you must conduct a performance test for existing and new sources at a large copper or other nonferrous foundry that is subject to § 63.11550(b). You must conduct the test within 180 days of your compliance date and report the results in your Notification of Compliance Status according to § 63.9(h).

(b) If you own or operate an existing affected source at a large copper or other nonferrous foundry that is subject to § 63.11550(b), you are not required to conduct a performance test if a prior performance test was conducted within the past 5 years of the compliance date using the same methods specified in paragraph (c) of this section and you meet either of the following two conditions:

(1) No process changes have been made since the test; or

(2) You demonstrate to the satisfaction of the permitting authority that the results of the performance test, with or without adjustments, reliably demonstrate compliance despite process changes.

(c) You must conduct each performance test according to the requirements in § 63.7 and the requirements in paragraphs (c)(1) and (2) of this section.

(1) You must determine the concentration of PM (for the concentration standard) or the mass rate of PM

in pounds per hour at the inlet and outlet of the control device (for the percent reduction standard) according to the following test methods:

(i) Method 1 or 1A (40 CFR part 60, appendix A–1) to select sampling port locations and the number of traverse points in each stack or duct. If you are complying with the concentration provision in §63.11550(b), sampling sites must be located at the outlet of the control device and prior to any releases to the atmosphere. If you are complying with the percent reduction provision in §63.11550(b), sampling sites must be located at the inlet and outlet of the control device and prior to any releases to the atmosphere.

(ii) Method 2, 2A, 2C, 2D, 2F (40 CFR part 60, appendix A–1), or Method 2G (40 CFR part 60, appendix A–2) to determine the volumetric flow rate of the stack gas.

(iii) Method 3, 3A, or 3B (40 CFR part 60, appendix A–2) to determine the dry molecular weight of the stack gas. You may use ANSI/ASME PTC 19.10–1981, ''Flue and Exhaust Gas Analyses'' (incorporated by reference—see §63.14) as an alternative to EPA Method 3B.

(iv) Method 4 (40 CFR part 60, appendix A–3) to determine the moisture content of the stack gas.

(v) Method 5 or 5D (40 CFR part 60, appendix A–3) or Method 17 (40 CFR part 60, appendix A–6) to determine the concentration of PM or mass rate of PM (front half filterable catch only). If you choose to comply with the percent reduction PM standard, you must determine the mass rate of PM at the inlet and outlet in pounds per hour and calculate the percent reduction in PM.

(2) Three valid test runs are needed to comprise a performance test. Each run must cover at least one production cycle (charging, melting, and tapping).

(3) For a source with a single control device exhausted through multiple stacks, you must ensure that three runs are performed by a representative sampling of the stacks satisfactory to the Administrator or his or her delegated representative. You must provide data or an adequate explanation why the stack(s) chosen for testing are representative.

### §63.11552 What are my monitoring requirements?

(a) You must record the information specified in §63.11553(c)(2) to document conformance with the management practices plan required in §63.11550(a).

(b) Except as specified in paragraph (b)(3) of this section, if you own or operate an existing affected source at a large foundry, you must conduct visible emissions monitoring according to the requirements in paragraphs (b)(1) and (2) of this section.

(1) You must conduct visual monitoring of the fabric filter discharge point(s) (outlets) for any VE according to the schedule specified in paragraphs (b)(1)(i) and (ii) of this section.

(i) You must perform a visual determination of emissions once per day, on each day the process is in operation, during melting operations.

(ii) If no VE are detected in consecutive daily visual monitoring performed in accordance with paragraph (b)(1)(i) of this section for 30 consecutive days or more of operation of the process, you may decrease the frequency of visual monitoring to once per calendar week of time the process is in operation, during melting operations. If VE are detected during these inspections, you must resume daily visual monitoring of that operation during each day that the process is in operation, in accordance with paragraph (b)(1)(i) of this section until you satisfy the criteria of this section to resume conducting weekly visual monitoring.

(2) If the visual monitoring reveals the presence of any VE, you must initiate procedures to determine the cause of the emissions within 1 hour of the initial observation and alleviate the cause of the emissions within 3 hours of initial observation by taking whatever corrective action(s) are necessary. You may take more than 3 hours to alleviate a specific condition that causes VE if you identify in the monitoring plan this specific condition as one that could lead to VE in advance, you adequately explain why it is not feasible to alleviate this condition within 3 hours of the time the VE occurs, and you demonstrate that the requested time will ensure alleviation of this condition as expeditiously as practicable.

(3) As an alternative to the monitoring requirements for an existing affected source in paragraphs (b)(1) and (2) of this section, you may install, operate, and maintain a bag leak detection system for each fabric filter according to the requirements in paragraph (c) of this section.

(c) If you own or operate a new affected source located at a large foundry subject to the PM requirements in § 63.11550(b)(2) that is equipped with a fabric filter, you must install, operate, and maintain a bag leak detection system for each fabric filter according to paragraphs (c)(1) through (4) of this section.

(1) Each bag leak detection system must meet the specifications and requirements in paragraphs (c)(1)(i) through (viii) of this section.

(i) The bag leak detection system must be certified by the manufacturer to be capable of detecting PM emissions at concentrations of 1 milligram per actual cubic meter (0.00044 grains per actual cubic foot) or less.

(ii) The bag leak detection system sensor must provide output of relative PM loadings. You must continuously record the output from the bag leak detection system using electronic or other means (e.g., using a strip chart recorder or a data logger).

(iii) The bag leak detection system must be equipped with an alarm system that will sound when the system detects an increase in relative particulate loading over the alarm set point established according to paragraph (c)(1)(iv) of this section, and the alarm must be located such that it can be heard by the appropriate plant personnel.

(iv) In the initial adjustment of the bag leak detection system, you must establish, at a minimum, the baseline output by adjusting the sensitivity (range) and the averaging period of the device, the alarm set points, and the alarm delay time.

(v) Following initial adjustment, you must not adjust the averaging period, alarm set point, or alarm delay time without approval from the Administrator or delegated authority, except as provided in paragraph (c)(1)(vi) of this section.

(vi) Once per quarter, you may adjust the sensitivity of the bag leak detection system to account for seasonal effects, including temperature and humidity, according to the procedures identified in the site-specific monitoring plan required by paragraph (c)(2) of this section.

(vii) You must install the bag leak detection sensor downstream of the fabric filter.

(viii) Where multiple detectors are required, the system's instrumentation and alarm may be shared among detectors.

(2) You must prepare a site-specific monitoring plan for each bag leak detection system. You must operate and maintain each bag leak detection system according to the plan at all times. Each monitoring plan must describe the items in paragraphs (c)(2)(i) through (vi) of this section.

(i) Installation of the bag leak detection system;

(ii) Initial and periodic adjustment of the bag leak detection system, including how the alarm set-point and alarm delay time will be established;

(iii) Operation of the bag leak detection system, including quality assurance procedures;

(iv) How the bag leak detection system will be maintained, including a routine maintenance schedule and spare parts inventory list;

(v) How the bag leak detection system output will be recorded and stored; and

(vi) Corrective action procedures as specified in paragraph (c)(3) of this section.

(3) Except as provided in paragraph (c)(4) of this section, you must initiate procedures to determine the cause of every alarm from a bag leak detection system within 1 hour of the alarm and alleviate the cause of the alarm within 3 hours of the alarm by taking whatever corrective action(s) are necessary. Corrective actions may include, but are not limited to, the following:

(i) Inspecting the fabric filter for air leaks, torn or broken bags or filter media, or any other condition that may cause an increase in PM emissions;

(ii) Sealing off defective bags or filter media;

(iii) Replacing defective bags or filter media, or otherwise repairing the control device;

(iv) Sealing off a defective fabric filter compartment;

(v) Cleaning the bag leak detection system probe, or otherwise repairing the bag leak detection system; or

(4) You may take more than 3 hours to alleviate a specific condition that causes an alarm if you identify in the monitoring plan this specific condition as one that could lead to an alarm, adequately explain why it is not feasible to alleviate this condition within 3 hours of the time the alarm occurs, and demonstrate that the requested time will ensure alleviation of this condition as expeditiously as practicable.

(d) If you use a control device other than a fabric filter for new or existing affected sources subject to §63.11550(b), you must submit a request to use an alternative monitoring procedure as required in §63.8(f)(4).

### §63.11553 What are my notification, reporting, and recordkeeping requirements?

(a) You must submit the Initial Notification required by §63.9(b)(2) no later than 120 calendar days after June 25, 2009 or within 120 days after the source becomes subject to the standard. The Initial Notification must include the information specified in paragraphs (a)(1) through (3) of this section and may be combined with the Notification of Compliance Status required in paragraph (b) of this section.

(1) The name and address of the owner or operator;

(2) The address (i.e., physical location) of the affected source; and

(3) An identification of the relevant standard, or other requirement, that is the basis of the notification and source's compliance date.

(b) You must submit the Notification of Compliance Status required by §63.9(h) no later than 120 days after the applicable compliance date specified in §63.11545 unless you must conduct a performance test. If you must conduct a performance test, you must submit the Notification of Compliance Status within 60 days of completing the performance test. Your Notification of Compliance Status must indicate if you are a small or large foundry as defined in §63.11556, the production amounts as the basis for the determination, and if you are a large foundry, whether you elect to comply with the control efficiency requirement or PM concentration limit in §63.11550(b). In addition to the information required in §63.9(h)(2) and §63.11551, your notification must include the following certification(s) of compliance, as applicable, and signed by a responsible official:

(1) ''This facility will operate in a manner that minimizes HAP emissions from the melting operations to the extent possible. This includes at a minimum that the owners and/or operators of the affected source will cover or enclose each melting furnace that is equipped with a cover or enclosure during melting operations to the extent practicable as required in 63.11550(a)(1).''

(2) ''This facility agrees to purchase only metal scrap that has been depleted (to the extent practicable) of aluminum foundry HAP, copper foundry HAP, or other nonferrous foundries HAP (as applicable) in the materials charged to the melting furnace, except for metal scrap that is purchased specifically for its HAP metal content for use in alloying or to meet specifications for the casting as required by 63.11550(a)(2).''

(3) ''This facility has prepared and will operate by a written management practices plan according to §63.11550(a)(3).''

(4) If the owner or operator of an existing affected source at a large foundry is certifying compliance based on the results of a previous performance test: ''This facility complies with §63.11550(b) based on a previous performance test in accordance with §63.11551(b).''

(5) This certification of compliance is required by the owner or operator that installs bag leak detection systems: ''This facility has installed a bag leak detection system in accordance with §63.11552(b)(3) or (c), has prepared a bag leak detection system monitoring plan in accordance with §63.11552(c), and will operate each bag leak detection system according to the plan.''

(c) You must keep the records specified in paragraphs (c)(1) through (5) of this section.

(1) As required in § 63.10(b)(2)(xiv), you must keep a copy of each notification that you submitted to comply with this subpart and all documentation supporting any Initial Notification or Notification of Compliance Status that you submitted.

(2) You must keep records to document conformance with the management practices plan required by § 63.11550 as specified in paragraphs (c)(2)(i) and (ii) of this section.

(i) For melting furnaces equipped with a cover or enclosure, records must identify each melting furnace equipped with a cover or enclosure and document that the procedures in the management practices plan were followed during the monthly inspections. These records may be in the form of a checklist.

(ii) Records documenting that you purchased only metal scrap that has been depleted of HAP metals (to the extent practicable) charged to the melting furnace. If you purchase scrap metal specifically for the HAP metal content for use in alloying or to meet specifications for the casting, you must keep records to document that the HAP metal is included in the material specifications for the cast metal product.

(3) You must keep the records of all performance tests, inspections and monitoring data required by §§ 63.11551 and 63.11552, and the information identified in paragraphs (c)(3)(i) through (vi) of this section for each required inspection or monitoring.

(i) The date, place, and time of the monitoring event;

(ii) Person conducting the monitoring;

(iii) Technique or method used;

(iv) Operating conditions during the activity;

(v) Results, including the date, time, and duration of the period from the time the monitoring indicated a problem (e.g., VE) to the time that monitoring indicated proper operation; and

(vi) Maintenance or corrective action taken (if applicable).

(4) If you own or operate a new or existing affected source at a small foundry that is not subject to § 63.11550(b), you must maintain records to document that your facility melts less than 6,000 tpy total of copper, other nonferrous metal, and all associated alloys (excluding aluminum) in each calendar year.

(5) If you use a bag leak detection system, you must keep the records specified in paragraphs (c)(5)(i) through (iii) of this section.

(i) Records of the bag leak detection system output.

(ii) Records of bag leak detection system adjustments, including the date and time of the adjustment, the initial bag leak detection system settings, and the final bag leak detection system settings.

(iii) The date and time of all bag leak detection system alarms, and for each valid alarm, the time you initiated corrective action, the corrective action taken, and the date on which corrective action was completed.

(d) Your records must be in a form suitable and readily available for expeditious review, according to § 63.10(b)(1). As specified in § 63.10(b)(1), you must keep each record for 5 years following the date of each recorded action. For records of annual metal melt production, you must keep the records for 5 years from the end of the calendar year. You must keep each record onsite for at least 2 years after the date of each recorded action according to § 63.10(b)(1). You may keep the records offsite for the remaining 3 years.

(e) If a deviation occurs during a semiannual reporting period, you must submit a compliance report to your permitting authority according to the requirements in paragraphs (e)(1) and (2) of this section.

(1) The first reporting period covers the period beginning on the compliance date specified in § 63.11545 and ending on June 30 or December 31, whichever date comes first after your compliance date. Each subsequent reporting period covers the semiannual period from January 1 through June 30 or from July 1 through December 31. Your compliance report must be postmarked or delivered no later than July 31 or January 31, whichever date comes first after the end of the semiannual reporting period.

(2) A compliance report must include the information in paragraphs (e)(2)(i) through (iv) of this section.

(i) Company name and address.

(ii) Statement by a responsible official, with the official's name, title, and signature, certifying the truth, accuracy and completeness of the content of the report.

(iii) Date of the report and beginning and ending dates of the reporting period.

(iv) Identification of the affected source, the pollutant being monitored, applicable requirement, description of deviation, and corrective action taken.

[74 FR 30393, June 25, 2009, as amended at 74 FR 46495, Sept. 10, 2009]

OTHER REQUIREMENTS AND INFORMATION

### § 63.11555 What General Provisions apply to this subpart?

Table 1 to this subpart shows which parts of the General Provisions in §§ 63.1 through 63.16 apply to you.

### § 63.11556 What definitions apply to this subpart?

Terms used in this subpart are defined in the Clean Air Act, in § 63.2, and in this section as follows:

*Aluminum foundry* means a facility that melts aluminum and pours molten aluminum into molds to manufacture aluminum castings (except die casting) that are complex shapes. For purposes of this subpart, this definition does not include primary or secondary metal producers that cast molten aluminum to produce simple shapes such as sows, ingots, bars, rods, or billets.

*Aluminum foundry HAP* means any compound of the following metals: beryllium, cadmium, lead, manganese, or nickel, or any of these metals in the elemental form.

*Annual copper and other nonferrous foundry metal melt capacity* means, for new affected sources, the lower of the copper and other nonferrous metal melting operation capacity, assuming 8,760 operating hours per year or, if applicable, the maximum permitted copper and other nonferrous metal melting operation production rate for the melting operation calculated on an annual basis. Unless otherwise specified in the permit, permitted copper and other nonferrous metal melting operation rates that are not specified on an annual basis must be annualized assuming 24 hours per day, 365 days per year of operation. If the permit limits the operating hours of the melting operation(s) or foundry, then the permitted operating hours are used to annualize the maximum permitted copper and other nonferrous metal melt production rate. The annual copper and other nonferrous metal melt capacity does not include the melt capacity for ferrous metal melted in iron or steel foundry melting operations that are co-located with copper or other nonferrous melting operations or the nonferrous metal melted in non-foundry melting operations.

*Annual copper and other nonferrous foundry metal melt production* means, for existing affected sources, the quantity of copper and other nonferrous metal melted in melting operations at the foundry in a given calendar year. For the purposes of this subpart, metal melt production is determined on the basis of the quantity of metal charged to the melting operations. The annual copper and nonferrous metal melt production does not include the melt production of ferrous metal melted in iron or steel foundry melting operations that are co-located with copper and other nonferrous melting operations or the nonferrous metal melted in non-foundry melting operations.

*Annual metal melt capacity*, for new affected sources, means the lower of the aluminum, copper, and other nonferrous metal melting operation capacity, assuming 8,760 operating hours per year or, if applicable, the maximum permitted aluminum, copper, and other nonferrous metal melting operation production rate for the melting operation calculated on an annual basis. Unless otherwise specified in the permit, permitted aluminum, copper, and other nonferrous metal melting operation rates that are not specified on an annual basis must be annualized assuming 24 hours per day, 365 days per year of operation. If the permit limits the operating hours of the melting operation(s) or foundry, then the permitted operating hours are used to annualize the maximum permitted aluminum, copper, and other nonferrous

metal melt production rate. The annual metal melt capacity does not include the melt capacity for ferrous metal melted in iron or steel foundry melting operations that are co-located with aluminum, copper, or other nonferrous melting operations or the nonferrous metal melted in non-foundry melting operations.

*Annual metal melt production* means, for existing affected sources, the quantity of aluminum, copper, and other nonferrous metal melted in melting operations at the foundry in a given calendar year. For the purposes of this subpart, annual metal melt production is determined on the basis of the quantity of metal charged to the melting operations. The annual metal melt production does not include the melt production of ferrous metal melted in iron or steel foundry melting operations that are co-located with aluminum, copper, or other nonferrous melting operations or the nonferrous metal melted in non-foundry melting operations.

*Bag leak detection system* means a system that is capable of continuously monitoring relative PM (*i.e.*, dust) loadings in the exhaust of a baghouse to detect bag leaks and other upset conditions. A bag leak detection system includes, but is not limited to, an instrument that operates on triboelectric, light scattering, light transmittance, or other effect to continuously monitor relative PM loadings.

*Copper foundry* means a foundry that melts copper or copper-based alloys and pours molten copper or copper-based alloys into molds to manufacture copper or copper-based alloy castings (excluding die casting) that are complex shapes. For purposes of this subpart, this definition does not include primary or secondary metal producers that cast molten copper to produce simple shapes such as sows, ingots, billets, bars, anode copper, rods, or copper cake.

*Copper foundry HAP* means any compound of any of the following metals: lead, manganese, or nickel, or any of these metals in the elemental form.

*Deviation* means any instance where an affected source subject to this subpart, or an owner or operator of such a source:

(1) Fails to meet any requirement or obligation established by this subpart, including but not limited to any emissions limitation or work practice standard;

(2) Fails to meet any term or condition that is adopted to implement an applicable requirement in this subpart and that is included in the operating permit for any affected source required to obtain such a permit; or

(3) Fails to meet any emissions limitation in this subpart during startup, shutdown, or malfunction, regardless of whether or not such failure is permitted by this subpart.

*Die casting* means operations classified under the North American Industry Classification System codes 331521 (Aluminum Die-Casting Foundries) and 331522 (Nonferrous (except Aluminum) Die-Casting Foundries) and comprises establishments primarily engaged in introducing molten aluminum, copper, and other nonferrous metal, under high pressure, into molds or dies to make die-castings.

*Large foundry* means, for an existing affected source, a copper or other nonferrous foundry with an annual metal melt production of copper, other nonferrous metals, and all associated alloys (excluding aluminum) of 6,000 tons or greater. For a new affected source, *large foundry* means a copper or other nonferrous foundry with an annual metal melt capacity of copper, other nonferrous metals, and all associated alloys (excluding aluminum) of 6,000 tons or greater.

*Material containing aluminum foundry HAP* means a material containing one or more aluminum foundry HAP. Any material that contains beryllium, cadmium, lead, or nickel in amounts greater than or equal to 0.1 percent by weight (as the metal), or contains manganese in amounts greater than or equal to 1.0 percent by weight (as the metal), as shown in formulation data provided by the manufacturer or supplier, such as the Material Safety Data Sheet for the material, is considered to be a material containing aluminum foundry HAP.

*Material containing copper foundry HAP* means a material containing one or more copper foundry HAP. Any material that contains lead or nickel in

amounts greater than or equal to 0.1 percent by weight (as the metal), or contains manganese in amounts greater than or equal to 1.0 percent by weight (as the metal), as shown in formulation data provided by the manufacturer or supplier, such as the Material Safety Data Sheet for the material, is considered to be a material containing copper foundry HAP.

*Material containing other nonferrous foundry HAP* means a material containing one or more other nonferrous foundry HAP. Any material that contains chromium, lead, or nickel in amounts greater than or equal to 0.1 percent by weight (as the metal), as shown in formulation data provided by the manufacturer or supplier, such as the Material Safety Data Sheet for the material, is considered to be a material containing other nonferrous foundry HAP.

*Melting operations* (the affected source) means the collection of furnaces (*e.g.*, induction, reverberatory, crucible, tower, dry hearth) used to melt metal ingot, alloyed ingot and/or metal scrap to produce molten metal that is poured into molds to make castings. Melting operations dedicated to melting ferrous metal at an iron and steel foundry are not included in this definition and are not part of the affected source.

*Other nonferrous foundry* means a facility that melts nonferrous metals other than aluminum, copper, or copper-based alloys and pours the nonferrous metals into molds to manufacture nonferrous metal castings (excluding die casting) that are complex shapes. For purposes of this subpart, this definition does not include primary or secondary metal producers that cast molten nonferrous metals to produce simple shapes such as sows, ingots, bars, rods, or billets.

*Other nonferrous foundry HAP* means any compound of the following metals: chromium, lead, and nickel, or any of these metals in the elemental form.

*Small foundry* means, for an existing affected source, a copper or other nonferrous foundry with an annual metal melt production of copper, other nonferrous metals, and all associated alloys (excluding aluminum) of less than 6,000 tons. For a new affected source, *small foundry* means a copper or other nonferrous foundry with an annual metal melt capacity of copper, other nonferrous metals, and all associated alloys (excluding aluminum) of less than 6,000 tons.

### § 63.11557 Who implements and enforces this subpart?

(a) This subpart can be implemented and enforced by the U.S. EPA or a delegated authority, such as your State, local, or Tribal agency. If the U.S. EPA Administrator has delegated authority to your State, local, or Tribal agency, then that agency has the authority to implement and enforce this subpart. You should contact your U.S. EPA Regional Office to find out if this subpart is delegated to your State, local, or Tribal agency.

(b) In delegating implementation and enforcement authority of this subpart to a State, local, or Tribal agency under 40 CFR part 63, subpart E, the authorities contained in paragraph (c) of this section are retained by the Administrator of the U.S. EPA and are not transferred to the State, local, or Tribal agency.

(c) The authorities that will not be delegated to State, local, or Tribal agencies are listed in paragraphs (c)(1) through (4) of this section.

(1) Approval of alternatives to the applicability requirements in § 63.11544, the compliance date requirements in § 63.11545, and the applicable standards in § 63.11550.

(2) Approval of an alternative nonopacity emissions standard under § 63.6(g).

(3) Approval of a major change to a test method under § 63.7(e)(2)(ii) and (f). A ''major change to test method'' is defined in § 63.90(a).

(4) Approval of a major change to monitoring under § 63.8(f). A ''major change to monitoring'' is defined in § 63.90(a).

(5) Approval of a waiver of recordkeeping or reporting requirements under § 63.10(f), or another major change to recordkeeping/reporting. A ''major change to recordkeeping/reporting'' is defined in § 63.90(a).

### § 63.11558 [Reserved]

TABLE 1 TO SUBPART ZZZZZZ OF PART 63—APPLICABILITY OF GENERAL PROVISIONS TO ALUMINUM, COPPER, AND OTHER NONFERROUS FOUNDRIES AREA SOURCES

As required in §63.11555, ''What General Provisions apply to this subpart?,'' you must comply with each requirement in the following table that applies to you.

| Citation | Subject | Applies to subpart ZZZZZZ? | Explanation |
|---|---|---|---|
| §63.1(a)(1), (a)(2), (a)(3), (a)(4), (a)(6), (a)(10)–(a)(12), (b)(1), (b)(3), (c)(1), (c)(2), (c)(5), (e). | Applicability | Yes | §63.11544(f) exempts affected sources from the obligation to obtain a title V operating permit. |
| §63.1(a)(5), (a)(7)–(a)(9), (b)(2), (c)(3), (c)(4), (d). | Reserved | No. | |
| §63.2 | Definitions | Yes. | |
| §63.3 | Units and Abbreviations | Yes. | |
| §63.4 | Prohibited Activities and Circumvention. | Yes. | |
| §63.5 | Preconstruction Review and Notification Requirements. | Yes. | |
| §63.6(a), (b)(1)–(b)(5), (b)(7), (c)(1), (c)(2), (c)(5), (e)(1), (e)(3)(i), (e)(3)(iii)–(e)(3)(ix), (f)(2), (f)(3), (g), (i), (j). | Compliance with Standards and Maintenance Requirements. | Yes. | |
| §63.6(f)(1) | Compliance with Nonopacity Emission Standards. | No | Subpart ZZZZZZ requires continuous compliance with all requirements in this subpart. |
| §63.6(h)(1), (h)(2), (h)(5)–(h)(9) | Compliance with Opacity and Visible Emission Limits. | No | Subpart ZZZZZZ does not contain opacity or visible emission limits. |
| §63.6(b)(6), (c)(3), (c)(4), (d), (e)(2), (e)(3)(ii), (h)(3), (h)(5)(iv). | Reserved | No. | |
| §63.7 | Applicability and Performance Test Dates. | Yes. | |
| §63.8(a)(1), (b)(1), (f)(1)–(5), (g) | Monitoring Requirements | Yes. | |
| §63.8(a)(2), (a)(4), (b)(2)–(3), (c), (d), (e), (f)(6), (g). | Continuous Monitoring Systems | No | Subpart ZZZZZZ does not require a flare or CPMS, COMS or CEMS. |
| §63.8(a)(3) | [Reserved] | No. | |
| §63.9(a), (b)(1), (b)(2)(i)–(iii), (b)(5), (c), (d), (e), (h)(1)–(h)(3), (h)(5), (h)(6), (j). | Notification Requirements | Yes | Subpart ZZZZZZ requires submission of Notification of Compliance Status within 120 days of compliance date unless a performance test is required. |
| §63.9(b)(2)(iv)–(v), (b)(4), (f), (g), (i). | No. | | |
| §63.9(b)(3), (h)(4) | Reserved | No. | |
| §63.10(a), (b)(1), (b)(2)(i)–(v), (vii), (vii)(C), (viii), (ix), (b)(3), (d)(1)–(2), (d)(4), (d)(5), (f). | Recordkeeping and Reporting Requirements. | Yes. | |
| §63.10(b)(2)(vi), (b)(2)(vii)(A)–(B), (c), (d)(3), (e). | No | Subpart ZZZZZZ does not require a CPMS, COMS, CEMS, or opacity or visible emissions limit.. | |
| §63.10(c)(2)–(c)(4), (c)(9) | Reserved | No. | |
| §63.11 | Control Device Requirements | No. | |
| §63.12 | State Authority and Delegations | Yes. | |
| §§63.13–63.16 | Addresses, Incorporations by Reference, Availability of Information, Performance Track Provisions. | Yes. | |

## Subpart AAAAAAA—National Emission Standards for Hazardous Air Pollutants for Area Sources: Asphalt Processing and Asphalt Roofing Manufacturing

SOURCE: 74 FR 63260, Dec. 2, 2009, unless otherwise noted.

APPLICABILITY AND COMPLIANCE DATES

### §63.11559 Am I subject to this subpart?

(a) You are subject to this subpart if you own or operate an asphalt processing operation and/or asphalt roofing manufacturing operation that is an area source of hazardous air pollutant (HAP) emissions, as defined in §63.2.

(b) This subpart applies to each new or existing affected source as defined in paragraphs (b)(1) and (b)(2) of this section.

(1) *Asphalt processing*. The affected source for asphalt processing operations is the collection of all blowing stills, as defined in §63.11566, at an asphalt processing operation.

(2) *Asphalt roofing manufacturing*. The affected source for asphalt roofing manufacturing operations is the collection of all asphalt coating equipment, as defined in §63.11566, at an asphalt roofing manufacturing operation.

(c) This subpart does not apply to hot mix asphalt plant operations that are used in the paving of roads or hardstand, or operations where asphalt may be used in the fabrication of a built-up roof.

(d) An affected source is a new affected source if you commenced construction or reconstruction after July 9, 2009.

(e) An affected source is reconstructed if it meets the criteria as defined in §63.2.

(f) An affected source is an existing source if it is not new or reconstructed.

(g) This subpart does not apply to research or laboratory facilities, as defined in section 112(c)(7) of the Clean Air Act.

(h) You are exempt from the obligation to obtain a permit under 40 CFR part 70 or 40 CFR part 71, provided you are not otherwise required to obtain a permit under 40 CFR 70.3(a) or 40 CFR 71.3(a). Notwithstanding the previous sentence, you must continue to comply with the provisions of this subpart.

### §63.11560 What are my compliance dates?

(a) If you own or operate an existing affected source, you must be in compliance with the applicable provisions in this subpart no later than December 2, 2010. As specified in §63.11562(f), you must demonstrate initial compliance within 180 calendar days after December 2, 2010.

(b) If you own or operate a new affected source, you must be in compliance with the provisions in this subpart on or before December 2, 2009 or upon startup, whichever date is later. As specified in §63.11562(g), you must demonstrate initial compliance with the applicable emission limits no later than 180 calendar days after December 2, 2009 or within 180 calendar days after startup of the source, whichever is later.

STANDARDS AND COMPLIANCE REQUIREMENTS

### §63.11561 What are my standards and management practices?

(a) For asphalt processing operations, you must meet the emission limits specified in Table 1 of this subpart.

(b) For asphalt roofing manufacturing lines, you must meet the applicable emission limits specified in Table 2 of this subpart.

(c) These standards apply at all times.

### §63.11562 What are my initial compliance requirements?

(a) For asphalt processing operations, you must:

(1) Demonstrate initial compliance with the emission limits specified in Table 1 of this subpart by:

(i) Conducting emission tests using the methods specified in Table 3 of this subpart; or

(ii) Using the results of a previously-conducted emission test as specified in paragraph (d) of this section.

(2) Establish the value or range of values of the operating parameters specified in Table 4 of this subpart:

(i) Using the operating parameter data recorded during the compliance emission tests; or

(ii) Using the operating parameter data recorded during a previously-conducted emission test.

(b) For asphalt roofing manufacturing lines that use a control device to comply with the emission limits in Table 2 of this subpart, you must:

(1) Demonstrate initial compliance by:

(i) Conducting emission tests using the methods specified in Table 3 of this subpart; or

(ii) Using the results of a previously-conducted emission test as specified in paragraph (d) of this section.

(2) Establish the value of the operating parameter specified in Table 4 of this subpart for thermal oxidizers:

(i) Using the operating parameter data recorded during the compliance emission tests; or

(ii) Using the operating parameter data recorded during a previously-conducted emission test.

(3) Establish the value or range of values of the operating parameters specified in Table 4 of this subpart for control devices other than thermal oxidizers:

(i) Using the operating parameter data recorded during the compliance emission tests;

(ii) Using the operating parameter data recorded during a previously-conducted emission test; or

(iii) Using manufacturer performance specifications.

(c) For asphalt roofing manufacturing lines that do not require a control device to comply with the emission limits in Table 2 of this subpart, you must:

(1) Demonstrate initial compliance by:

(i) Conducting emission tests using the methods specified in Table 3 of this subpart,

(ii) Using the results of a previously-conducted emission test as specified in paragraph (d) of this section; or

(iii) Using process knowledge and engineering calculations as specified in paragraph (e) of this section.

(2) Establish the value or range of values of the operating parameters specified in Table 4 of this subpart:

(i) Using the operating parameter data recorded during the compliance emission tests;

(ii) Using the operating parameter data recorded during a previously-conducted emission test; or

(iii) Using process knowledge and engineering calculations as specified in paragraph (f) of this section.

(d) If you are using a previously-conducted emission test to demonstrate compliance with the emission limitations in this subpart for existing sources, as specified in paragraphs (a)(1)(ii), (b)(1)(ii), or (c)(1)(ii) of this section, the following conditions must be met:

(1) The emission test was conducted within the last 5 years;

(2) No changes have been made to the process since the time of the emission test;

(3) The operating conditions and test methods used for the previous test conform to the requirements of this subpart; and

(4) The data used to establish the value or range of values of the operating parameters, as specified in paragraphs (a)(2)(ii), (b)(2)(ii), or (c)(2)(ii) of this section, were recorded during the emission test.

(e) If you are using process knowledge and engineering calculations to demonstrate initial compliance as specified in paragraph (c)(1)(iii) of this section, you must prepare written documentation that contains the data and any assumptions used to calculate the process emission rate that demonstrate compliance with the emission limits specified in Table 2 of this subpart.

(f) If you are using process knowledge and engineering calculations to establish the value or range of values of operating parameters as specified in paragraph (c)(2)(iii) of this section, you must prepare written documentation that contains the data and any assumptions used to show that the process parameters and corresponding parameter values correlate to the process emissions.

(g) For existing sources, you must demonstrate initial compliance no later than 180 calendar days after December 2, 2010.

(h) For new sources, you must demonstrate initial compliance no later

than 180 calendar days after December 2, 2009 or within 180 calendar days after startup of the source, whichever is later.

(i) For emission tests conducted to demonstrate initial compliance with the emission limits specified in Tables 1 and 2 of this subpart, you must follow the requirements specified in paragraphs (i)(1) through (i)(4) of this section.

(1) You must conduct the tests while manufacturing the product that generates the greatest PAH and PM emissions to the control device inlet, or exiting the process if you are not using a control device to comply with the emissions limits specified in Tables 1 and 2 of this subpart.

(2) You must conduct a minimum of three separate test runs for each compliance test specified in paragraphs (a)(1)(i), (b)(1)(i), and (c)(1)(i) of this section according to the requirements specified in §63.7(e)(3). The sampling time and sample volume of each test run must be as follows:

(i) For asphalt processing operations, the sampling time and sample volume for each test run must be at least 90 minutes or the duration of the coating blow or non-coating blow, whichever is greater, and 2.25 dscm (79.4 dscf).

(ii) For asphalt coating operations, the sampling time and sample volume for each test run must be at least 120 minutes and 3.00 dscm (106 dscf).

(3) For asphalt processing operations, you must use the following equations to calculate the asphalt charging rate (P).

(i) $P = (Vd)/(K' \Theta)$

Where:

P = asphalt charging rate to blowing still, Mg/hr (ton/hr).
V = volume of asphalt charged, $m^3$ ($ft^3$).
d = density of asphalt, $kg/m^3$ ($lb/ft^3$).
K′ = conversion factor, 1000 kg/Mg (2000 lb/ton).
Θ = duration of test run, hr.

(ii) $d = K_1 - K_2 T_i$

Where:

d = Density of the asphalt, $kg/m^3$ ($lb/ft^3$)
$d = K_1 - K_2 T_i$
$K_1$ = 1056.1 $kg/m^3$ (metric units)
= 66.6147 $lb/ft^3$ (English Units)
$K_2$ = 0.6176 $kg/(m^3\ °C)$ (metric units)
= 0.02149 $lb/(ft^3\ °F)$ (English Units)
$T_i$ = temperature at the start of the blow, °C (°F)

(4) You must use the following equation to demonstrate compliance with the emission limits specified in Table 2 of this subpart:

$E = [(C)*(Q)/(P)*(K)]$

Where:

E = emission rate of particulate matter, kg/Mg (lb/ton).
C = concentration of particulate matter, g/dscm (gr/dscf).
Q = volumetric flow rate of effluent gas, dscm/hr (dscf/hr).
P = the average asphalt roofing production rate or asphalt charging rate over the duration of the test, Mg/hr (ton/hr).
K = conversion factor, 1000 g/kg [7000 (gr/lb)].

### §63.11563 What are my monitoring requirements?

(a) You must maintain the operating parameters established under §63.11562(a)(2), (b)(2), (b)(3), and (c)(2) as specified in Table 4 of this subpart.

(b) If you are using a control device to comply with the emission limits specified in Tables 1 and 2 of this subpart, you must develop and make available for inspection by the delegated authority, upon request, a site-specific monitoring plan for each monitoring system that addresses the following:

(1) Installation of the CPMS probe or other interface at a measurement location relative to each affected process unit such that the measurement is representative of control of the exhaust emissions (*e.g.*, on or downstream of the last control device);

(2) Performance and equipment specifications for the probe or interface, the pollutant concentration or parametric signal analyzer, and the data collection and reduction system; and

(3) Performance evaluation procedures and acceptance criteria (*e.g.*, calibrations).

(i) In your site-specific monitoring plan, you must also address the following:

(A) Ongoing operation and maintenance procedures in accordance with the general requirements of §63.8(c)(1), (c)(3), (c)(4)(ii), (c)(7), and (c)(8);

(B) Ongoing data quality assurance procedures in accordance with the general requirements of §63.8(d); and

(C) Ongoing recordkeeping and reporting procedures in accordance with

the general requirements of § 63.10(c), (e)(1), and (e)(2)(i).

(c) If you are using a control device to comply with the emission limits specified in Tables 1 and 2 of this subpart, you must install, operate, and maintain a continuous parameter monitoring system (CPMS) as specified in paragraphs (c)(1) through (c)(3) of this section.

(1) The CPMS must complete a minimum of one cycle of operation for each successive 15-minute period.

(2) To determine the 3-hour average, you must:

(i) Have a minimum of four successive cycles of operation to have a valid hour of data.

(ii) Have valid data from at least three of four equally spaced data values for that hour from a CPMS that is not out-of-control according to your site-specific monitoring plan.

(iii) Determine the 3-hour average of all recorded readings for each operating day, except as stated in paragraph (g) of this section. You must have at least two of the three hourly averages for that period using only hourly average values that are based on valid data (*i.e.*, not from out-of-control periods).

(3) You must record the results of each inspection, calibration, and validation check of the CPMS.

(d) For each temperature monitoring device, you must meet the CPMS requirements in paragraphs (c)(1) through (c)(3) of this section and the following requirements:

(1) Locate the temperature sensor in a position that provides a representative temperature.

(2) For a noncryogenic temperature range, use a temperature sensor with a minimum measurement sensitivity of 2.8 °C or 1.0 percent of the temperature value, whichever is larger.

(3) If a chart recorder is used, the recorder sensitivity in the minor division must be at least 20 °F.

(4) Perform an accuracy check at least semiannually or following an operating parameter deviation:

(i) According to the procedures in the manufacturer's documentation; or

(ii) By comparing the sensor output to redundant sensor output; or

(iii) By comparing the sensor output to the output from a calibrated temperature measurement device; or

(iv) By comparing the sensor output to the output from a temperature simulator.

(5) Conduct accuracy checks any time the sensor exceeds the manufacturer's specified maximum operating temperature range or install a new temperature sensor.

(6) At least quarterly or following an operating parameter deviation, perform visual inspections of components if redundant sensors are not used.

(e) For each pressure measurement device, you must meet the CPMS requirements of paragraphs (e)(1) through (e)(6) of this section and the following requirements:

(1) Locate the pressure sensor(s) in, or as close as possible, to a position that provides a representative measurement of the pressure.

(2) Use a gauge with a minimum measurement sensitivity of 0.12 kiloPascals or a transducer with a minimum measurement sensitivity of 5 percent of the pressure range.

(3) Check pressure tap for blockage daily. Perform an accuracy check at least quarterly or following an operating parameter deviation:

(i) According to the manufacturer's procedures; or

(ii) By comparing the sensor output to redundant sensor output.

(4) Conduct calibration checks any time the sensor exceeds the manufacturer's specified maximum operating pressure range or install a new pressure sensor.

(5) At least monthly or following an operating parameter deviation, perform a leak check of all components for integrity, all electrical connections for continuity, and all mechanical connections for leakage.

(6) At least quarterly or following an operating parameter deviation, perform visible inspections on all components if redundant sensors are not used.

(f) For each electrostatic precipitator (ESP) used to control emissions, you must install and operate a CPMS that meets the requirements of paragraphs (c)(1) through (c)(3) of this section to

provide representative measurements of the voltage supplied to the ESP.

(g) If you are not using a control device to comply with the emission limits specified in Tables 1 and 2 of this subpart, you must develop and make available for inspection by the delegated authority, upon request, a site-specific monitoring plan. The plan must specify the process parameters established during the initial compliance assessment and how they are being monitored and maintained to demonstrate continuous compliance.

(h) If you would like to use parameters or means other than those specified in Table 4 of this subpart to demonstrate continuous compliance with the emission limits specified in Tables 1 and 2 of this subpart, you must apply to the Administrator for approval of an alternative monitoring plan under § 63.8(f). The plan must specify how process parameters established during the initial compliance assessment will be monitored and maintained to demonstrate continuous compliance.

(i) At all times the owner or operator must operate and maintain any affected source, including associated air pollution control equipment and monitoring equipment, in a manner consistent with safety and good air pollution control practices for minimizing emissions. The general duty to minimize emissions does not require the owner or operator to make any further efforts to reduce emissions if levels required by this standard have been achieved. Determination of whether such operation and maintenance procedures are being used will be based on information available to the Administrator which may include, but is not limited to, monitoring results, review of operation and maintenance procedures, review of operation and maintenance records, and inspection of the source.

(j) You must conduct a performance evaluation of each CPMS in accordance with your site-specific monitoring plan.

(k) You must operate and maintain the CPMS in continuous operation according to the site-specific monitoring plan.

[74 FR 63260, Dec. 2, 2009, as amended at 75 FR 12989, Mar. 18, 2010]

### § 63.11564 What are my notification, recordkeeping, and reporting requirements?

(a) You must submit the notifications specified in paragraphs (a)(1) through (a)(6) of this section.

(1) You must submit all of the notifications in §§ 63.5(b), 63.7(b); 63.8(e) and (f); 63.9(b) through (e); and 63.9(g) and (h) that apply to you by the dates specified in those sections.

(2) As specified in § 63.9(b)(2), if you have an existing affected source, you must submit an Initial Notification not later than 120 calendar days after December 2, 2009, or no later than 120 days after the source becomes subject to this subpart, whichever is later.

(3) As specified in § 63.9(b)(4) and (5), if you have a new affected source, you must submit an Initial Notification not later than 120 calendar days after you become subject to this subpart.

(4) You must submit a notification of intent to conduct a compliance test at least 60 calendar days before the compliance test is scheduled to begin, as required in § 63.7(b)(1).

(5) You must submit a Notification of Compliance Status according to § 63.9(h)(2)(ii). You must submit the Notification of Compliance Status, including the compliance test results, before the close of business on the 60th calendar day following the completion of the compliance test according to § 63.10(d)(2).

(6) If you are using data from a previously-conducted emission test to serve as documentation of compliance with the emission standards and operating limits of this subpart, you must submit the test data in lieu of the initial compliance test results with the Notification of Compliance Status required under paragraph (a)(5) of this section.

(b) You must submit a compliance report as specified in paragraphs (b)(1) through (b)(4) of this section.

(1) If you are using a control device to comply with the emission limits, the compliance report must identify the controlled units (*e.g.*, blowing stills, saturators, coating mixers, coaters). If you are not using a control device to comply with the emission limits, the compliance report must identify the

site-specific process operating parameters monitored to determine compliance with the emission limits.

(2) During periods for which there are no deviations from any emission limitations (emission limit or operating limit) that apply to you, the compliance report must contain the information specified in paragraphs (b)(2)(i) through (b)(2)(v) of this section.

(i) Company name and address.

(ii) Statement by a responsible official with that official's name, title, and signature, certifying the truth, accuracy, and completeness of the content of the report.

(iii) Date of report and beginning and ending dates of the reporting period.

(iv) A statement that there were no deviations from the emission limitations during the reporting period.

(v) If there were no periods during which the CPMS was out-of-control as specified in § 63.8(c)(7), a statement that there were no periods during which the CPMS was out-of-control during the reporting period.

(3) For each deviation from an emission limitation (emission limit and operating limit), you must include the information in paragraphs (b)(3)(i) through (b)(3)(xii) of this section.

(i) The date and time that each deviation started and stopped.

(ii) The date and time that each CPMS was inoperative, except for zero (low-level) and high-level checks.

(iii) The date, time and duration that each CPMS was out-of-control, including the information in § 63.8(c)(8).

(iv) The date and time that each deviation started and stopped, and whether each deviation occurred during a period of startup, shutdown, or malfunction or during another period.

(v) A summary of the total duration of the deviation during the reporting period and the total duration as a percent of the total source operating time during that reporting period.

(vi) A breakdown of the total duration of the deviations during the reporting period into those that are due to startup, shutdown, control equipment problems, process problems, other known causes, and other unknown causes.

(vii) A summary of the total duration of CPMS downtime during the reporting period and the total duration of CPMS downtime as a percent of the total source operating time during that reporting period.

(viii) An identification of each air pollutant that was monitored at the affected source.

(ix) A brief description of the process units.

(x) A brief description of the CPMS.

(xi) The date of the latest CPMS certification or audit.

(xii) A description of any changes in CPMS or controls since the last reporting period.

(4) Unless the Administrator has approved a different schedule for submission of reports under § 63.10(a), you must submit each report specified in paragraph (b) of this section according to the following dates:

(i) The first compliance report must cover the period beginning on the compliance date that is specified for your affected source in § 63.11560 and ending on June 30 or December 31, whichever date is the first date following the end of the first calendar half after the compliance date that is specified for your source in § 63.11560.

(ii) The first compliance report must be postmarked or delivered no later than July 31 or January 31, whichever date follows the end of the first calendar half after the compliance date that is specified for your affected source in § 63.11560.

(iii) Each subsequent compliance report must cover the semiannual reporting period from January 1 through June 30 or the semiannual reporting period from July 1 through December 31.

(iv) Each subsequent compliance report must be postmarked or delivered no later than July 31 or January 31, whichever date is the first date following the end of the semiannual reporting period.

(c) You must maintain the records specified in paragraphs (c)(1) through (c)(10) of this section.

(1) A copy of each notification and report that you submitted to comply with this subpart, including all documentation supporting any Initial Notification or Notification of Compliance Status that you submitted, according to the requirements in § 63.10(b)(2)(xiv).

(2) Copies of emission tests used to demonstrate compliance and performance evaluations as required in § 63.10(b)(2)(viii).

(3) Documentation that shows that the following conditions are true if you use a previously-conducted emission test to demonstrate initial compliance as specified in § 63.11562(a)(1)(ii), (b)(1)(ii), and (c)(1)(ii):

(i) The test was conducted within the last 5 years;

(ii) No changes have been made to the process since the time of the emission test;

(iii) The operating conditions and test methods used for the previous test conform to the requirements of this subpart; and

(iv) The data used to establish the value or range of values of the operating parameters, as specified in § 63.11562(a)(2)(ii), (b)(2)(ii), or (c)(2)(ii), were recorded during the emission test.

(4) Documentation that identifies the operating parameters and values specified in Table 4 of this subpart and that contains the data used to establish the parameter values as specified in § 63.11562(a)(2), (b)(2), (b)(3), or (c)(2).

(5) Copies of the written manufacturers performance specifications used to establish operating parameter values as specified in § 63.11562(b)(3)(iii).

(6) Documentation of the process knowledge and engineering calculations used to demonstrate initial compliance as specified in § 63.11562(e).

(7) Documentation of the process knowledge and engineering calculations used to establish the value or range of values of operating parameters as specified in § 63.11562(f).

(8) A copy of the site-specific monitoring plan required under § 63.11563(b) or (g).

(9) A copy of the approved alternative monitoring plan required under § 63.11563(h), if applicable.

(10) Records of the operating parameter values required in Table 4 of this subpart to show continuous compliance with each operating limit that applies to you.

[74 FR 63260, Dec. 2, 2009, as amended at 75 FR 12989, Mar. 18, 2010; 85 FR 73921, Nov. 19, 2020]

OTHER REQUIREMENTS AND INFORMATION

### § 63.11565 What general provisions sections apply to this subpart?

You must comply with the requirements of the General Provisions (40 CFR part 63, subpart A) according to Table 5 of this subpart.

### § 63.11566 What definitions apply to this subpart?

*Asphalt coating equipment* means the saturators, coating mixers, and coaters used to apply asphalt to substrate to manufacture roofing products (*e.g.*, shingles, roll roofing).

*Asphalt flux* means the organic residual material from distillation of crude oil that is generally used in asphalt roofing manufacturing and paving and non-paving asphalt products.

*Asphalt processing operation* means any operation engaged in the preparation of asphalt flux at stand-alone asphalt processing facilities, petroleum refineries, and asphalt roofing facilities. Asphalt preparation, called ''blowing,'' is the oxidation of asphalt flux, achieved by bubbling air through the heated asphalt, to raise the softening point and to reduce penetration of the oxidized asphalt. An asphalt processing facility includes one or more asphalt flux blowing stills.

*Asphalt roofing manufacturing operation* means the collection of equipment used to manufacture asphalt roofing products through a series of sequential process steps. The equipment configuration of an asphalt roofing manufacturing process varies depending upon the type of substrate used (*i.e.*, organic or inorganic). For example, an asphalt roofing manufacturing line that uses organic substrate (*e.g.*, felt) typically would consist of a saturator (and wet looper), coating mixer, and coater (although the saturator could be bypassed if the line manufacturers multiple types of products). An asphalt roofing manufacturing line that uses inorganic (fiberglass mat) substrate typically would consist of a coating mixer and coater.

*Blowing still* means the equipment in which air is blown through asphalt flux to change the softening point and penetration rate of the asphalt flux, creating oxidized asphalt.

*Built-up roofing operations* means operations involved in the on-site (*e.g.*, at a commercial building) assembly of roofing system components (*e.g.*, asphalt, substrate, surface granules).

*Coater* means the equipment used to apply amended (filled or modified) asphalt to the top and bottom of the substrate (typically fiberglass mat) used to manufacture shingles and rolled roofing products.

*Coating mixer* means the equipment used to mix coating asphalt and a mineral stabilizer, prior to applying the stabilized coating asphalt to the substrate.

*Hot-mix asphalt operation* means operations involved in mixing asphalt cement and aggregates to produce materials for paving roadways and hardstand (*e.g.*, vehicle parking lots, prepared surfaces for materiel storage).

*Particulate matter (PM)* means, for the purposes of this subpart, includes any material determined gravimetrically using EPA Method 5A—Determination of Particulate Matter Emissions From the Asphalt Processing And Asphalt Roofing Industry (40 CFR part 60, appendix A–3).

*Responsible official* is defined in § 63.2.

*Saturator* means the equipment used to impregnate a substrate (predominantly organic felt) with asphalt. Saturators are predominantly used for the manufacture of rolled-roofing products (*e.g.*, saturated felt). For the purposes of this subpart, the term saturator includes impregnation vat and wet looper.

*Wet looper* means the series of rollers typically following the saturator used to provide additional absorption time for asphalt to penetrate the roofing substrate.

### § 63.11567 Who implements and enforces this subpart?

(a) This subpart can be implemented and enforced by us, the U.S. Environmental Protection Agency (U.S. EPA), or a delegated authority such as your State, local, or Tribal agency. If the U.S. EPA Administrator has delegated authority to your State, local, or Tribal agency, then that agency, in addition to the U.S. EPA, has the authority to implement and enforce this subpart. You should contact your U.S. EPA Regional Office to find out if implementation and enforcement of this subpart is delegated.

(b) In delegating implementation and enforcement authority of this subpart to a State, local, or Tribal agency under 40 CFR part 63, subpart E, the following authorities are retained by the Administrator of U.S. EPA:

(1) Approval of alternatives to the requirements in §§ 63.11559, 63.11560, 63.11561, 63.11562, and 63.11563.

(2) Approval of major changes to test methods under § 63.7(e)(2)(ii) and (f) and as defined in § 63.90.

(3) Approval of major changes to monitoring under § 63.8(f) and as defined in § 63.90.

(4) Approval of major changes to recordkeeping and reporting under § 63.10(f) and as defined in § 63.90.

TABLE 1 TO SUBPART AAAAAAA OF PART 63—EMISSION LIMITS FOR ASPHALT PROCESSING (REFINING) OPERATIONS

| For * * * | You must meet the following emission limits * * * |
|---|---|
| 1. Blowing stills | a. Limit PAH emissions to 0.003 lb/ton of asphalt charged to the blowing stills; or<br>b. Limit PM emissions to 1.2 lb/ton of asphalt charged to the blowing stills. |

TABLE 2 TO SUBPART AAAAAAA OF PART 63—EMISSION LIMITS FOR ASPHALT ROOFING MANUFACTURING (COATING) OPERATIONS

| For * * * | |
|---|---|
| 1. Coater-only production lines | a. Limit PAH emissions to 0.0002 lb/ton of asphalt roofing product manufactured; or<br>b. Limit PM emissions to 0.06 lb/ton of asphalt roofing product manufactured. |
| 2. Saturator-only production lines | a. Limit PAH emissions to 0.0007 lb/ton of asphalt roofing product manufactured; or |

| For * * * | |
|---|---|
| 3. Combined saturator/coater production lines. | b. Limit PM emissions to 0.30 lb/ton of asphalt roofing product manufactured.<br>a. Limit PAH emissions to 0.0009 lb/ton of asphalt roofing product manufactured; or<br>b. Limit PM emissions to 0.36 lb/ton of asphalt roofing product manufactured. |

TABLE 3 TO SUBPART AAAAAAA OF PART 63—TEST METHODS

| For * * * | You must use * * * |
|---|---|
| 1. Selecting the sampling locations[a] and the number of traverse points. | EPA test method 1 or 1A in appendix A to part 60. |
| 2. Determining the velocity and volumetric flow rate. | EPA test method 2, 2A, 2C, 2D, 2F, or 2G, as appropriate, in appendix A to part 60. |
| 3. Determining the gas molecular weight used for flow rate determination. | EPA test method 3, 3A, 3B, as appropriate, in appendix A to part 60. |
| 4. Measuring the moisture content of the stack gas. | EPA test method 4 in appendix A to part 60. |
| 5. Measuring the PM emissions | EPA test method 5A in appendix A to part 60. |
| 6. Measuring the PAH emissions | EPA test method 23[b] with analysis by SW–846 Method 8270D. |

[a] The sampling locations must be located at the outlet of the process equipment (or control device, if applicable), prior to any releases to the atmosphere.
[b] When using EPA Method 23, the toluene extraction step specified in section 3.1.2.1 of the method should be omitted.

TABLE 4 TO SUBPART AAAAAAA OF PART 63—OPERATING LIMITS

| If you comply with the emission limits using * * * | You must establish an operating value for * * * | And maintain[a] * * * |
|---|---|---|
| 1. A thermal oxidizer | Combustion zone temperature | The 3-hour average combustion zone temperature at or above the operating value established as specified in § 63.11562(a)(2) and (b)(2). |
| 2. A high-efficiency air filter or fiber bed filter. | a. Inlet gas temperature[b], and<br>b. Pressure drop across device[b]. | The 3-hour average inlet gas temperature within the operating range established as specified in § 63.11562(a)(2) and (b)(3).<br>The 3-hour average pressure drop across the device within the approved operating range established as specified in § 63.11562(a)(2) and (b)(3). |
| 3. An electrostatic precipitator (ESP). | Voltage[c] to the ESP | The 3-hour average ESP voltage[c] at or above the approved operating value established as specified in § 63.11562(a)(2) and (b)(3). |
| 4. Process modifications (*i.e.*, a control device is not required). | Appropriate process monitoring parameters.[d] | The monitoring parameters within the operating values established as specified in § 63.11562(c)(2). |

[a] The 3-hour averaging period applies at all times other than startup and shutdown, as defined in § 63.2. Within 24 hours of a startup event, or 24 hours prior to a shutdown event, you must normalize the emissions that occur during the startup or shutdown, when there is no production rate available to assess compliance with the lb/ton of product emission limits, with emissions that occur when the process is operational. The emissions that occur during the startup or shutdown event must be included with the process emissions when assessing compliance with the emission limits specified in Tables 1 and 2 of this subpart.
[b] As an alternative to monitoring the inlet gas temperature and pressure drop, you can use a leak detection system that identifies when the filter media has been comprised.
[c] As an alternative to monitoring the ESP voltage, you can monitor the ESP instrumentation (*e.g.* light, alarm) that indicates when the ESP must be cleaned and maintain a record of the instrumentation on an hourly basis. Failure to service the ESP within one hour of the indication is an exceedance of the applicable monitoring requirements specified in § 63.11563(a).
[d] If you are not using a control device to comply with the emission limits specified in Table 2 of this subpart, the process parameters and corresponding parameter values that you select to demonstrate continuous compliance must correlate to the process emissions.

TABLE 5 TO SUBPART AAAAAAA OF PART 63—APPLICABILITY OF GENERAL PROVISIONS TO SUBPART AAAAAAA

| Citation | Subject | Applies to subpart AAAAAAA |
|---|---|---|
| § 63.1 | Applicability | Yes. |
| § 63.2 | Definitions | Yes. |
| § 63.3 | Units and Abbreviations | Yes. |
| § 63.4 | Prohibited Activities | Yes. |
| § 63.5 | Construction/Reconstruction | Yes. |
| § 63.6(a)–(d) | Compliance With Standards and Maintenance Requirements. | Yes. |
| § 63.6(e)(1)(i) | Operation and Maintenance Requirements | No. |
| § 63.6(e)(1)(ii) | Operation and Maintenance Requirements | No. |
| § 63.6(e)(1)(iii) | Operation and Maintenance Requirements | Yes. |
| § 63.6(e)(2) | [Reserved]. | |

| Citation | Subject | Applies to subpart AAAAAAA |
|---|---|---|
| § 63.6(e)(3) | Startup, Shutdown, and Malfunction Plan | No. Subpart AAAAAAA does not require startup, shutdown, and malfunction plans. |
| § 63.6(f)(1) | Compliance with Nonopacity Emission Standards | No. The emission limits apply at all times. |
| § 63.6(f)(2)–(3) | Methods for Determining Compliance and Finding of Compliance. | Yes. |
| § 63.6(h) | Opacity/Visible Emission (VE) Standards | No. Subpart AAAAAAA does not contain opacity or VE standards. |
| § 63.6(i) | Compliance Extension | Yes. |
| § 63.6(j) | Presidential Compliance Exemption | Yes. |
| § 63.7(a)–(d) | Performance Testing Requirements | Yes. |
| § 63.7(e)(1) | Performance Testing Requirements | No. Subpart AAAAAAA specifies the conditions under which performance tests must be conducted. |
| § 63.7(e)(2)–(4) | Conduct of Performance Tests and Data Reduction | Yes. |
| § 63.7(f)–(h) | Use of Alternative Test Method; Data Analysis, Recordkeeping, and Reporting; and Waiver of Performance Tests. | Yes. |
| § 63.8(a)(1) | Applicability of Monitoring Requirements | Yes. |
| § 63.8(a)(2) | Performance Specifications | No. Subpart AAAAAAA does not allow CEMS. |
| § 63.8(a)(3) | [Reserved]. | |
| § 63.8(a)(4) | Monitoring with Flares | Yes. |
| § 63.8(b)(1) | Conduct of Monitoring | Yes. |
| § 63.8(b)(2)–(3) | Multiple Effluents and Multiple Monitoring Systems | Yes. |
| § 63.8(c)(1) | Monitoring System Operation and Maintenance | Yes. |
| § 63.8(c)(1)(i) | CMS maintenance | Yes. |
| § 63.8(c)(1)(ii) | Spare Parts for CMS Malfunction | Yes. |
| § 63.8(c)(1)(iii) | Compliance with Operation and Maintenance Requirements. | No. Subpart AAAAAAA does not require startup, shutdown, and malfunction plans. |
| § 63.8(c)(2)–(3) | Monitoring System Installation | Yes. |
| § 63.8(c)(4) | CMS Requirements | No; § 63.11563 specifies the CMS requirements. |
| § 63.8(c)(5) | COMS Minimum Procedures | No. Subpart AAAAAAA does not contain opacity or VE standards. |
| § 63.8(c)(6) | CMS Requirements | No; § 63.11563 specifies the CMS requirements. |
| § 63.8(c)(7)–(8) | CMS Requirements | Yes. |
| § 63.8(d) | CMS Quality Control | No; § 63.11563 specifies the CMS requirements. |
| § 63.8(e)–(f) | CMS Performance Evaluation | Yes. |
| § 63.8(g)(1)–(4) | Data Reduction Requirements | Yes. |
| § 63.8(g)(5) | Data to Exclude from Averaging | No. All monitoring data must be included when calculating averages. |
| § 63.9 | Notification Requirements | Yes. |
| § 63.10(a) | Recordkeeping and Reporting Requirements—Applicability | Yes. |
| § 63.10(b)(1) | General Recordkeeping Requirements | Yes. |
| § 63.10(b)(2)(i)–(iii) | General Recordkeeping Requirements | Yes. |
| § 63.10(b)(2)(iv)–(v) | Records of Actions Taken During Startup, Shutdown, and Malfunction Plans. | No. Subpart AAAAAAA does not require startup, shutdown, and malfunction plans. |
| § 63.10(b)(2)(vi)–(xiv) | General Recordkeeping Requirements | Yes. |
| § 63.10(c)(1)–(14) | Additional Recordkeeping Requirements for Sources with Continuous Monitoring Systems. | Yes. |
| § 63.10(c)(15) | Additional Recordkeeping Requirements for Sources with Continuous Monitoring Systems. | No. Subpart AAAAAAA does not require startup, shutdown, and malfunction plans. |
| § 63.10(d)(1)–(4) | General Reporting Requirements | Yes. |
| § 63.10(d)(5) | Periodic Startup, Shutdown, and Malfunction Reports | No. Subpart AAAAAAA does not require startup, shutdown, and malfunction plans. |
| § 63.10(e) | Additional Reporting Requirements for Sources with Continuous Monitoring Systems. | Yes. |
| § 63.10(f) | Waiver of Recordkeeping or Reporting Requirements | Yes. |
| § 63.11 | Control Device and Work Practice Requirements | Yes. |
| § 63.12 | State Authority and Delegations | Yes. |
| § 63.13 | Addresses of State Air Pollution Control Agencies and EPA Regional Offices. | Yes. |
| § 63.14 | Incorporations by Reference | Yes. |
| § 63.15 | Availability of Information and Confidentiality | Yes. |
| § 63.16 | Performance Track Provisions | No. |

## Subpart BBBBBBB—National Emission Standards for Hazardous Air Pollutants for Area Sources: Chemical Preparations Industry

SOURCE: 74 FR 69208, Dec. 30, 2009, unless otherwise noted.

APPLICABILITY AND COMPLIANCE DATES

### §63.11579 Am I subject to this subpart?

(a) You are subject to this subpart if you meet all of the following conditions:

(1) You own or operate a chemical preparations facility (as defined in §63.11588, ''What definitions apply to this subpart?''),

(2) The chemical preparations facility is a stationary area source of hazardous air pollutants (HAP) (as defined in §63.2), and

(3) The chemical preparations facility has at least one chemical preparations operation in target HAP service (as defined in §63.11588, ''What definitions apply to this subpart?'').

(b) The affected source is all chemical preparations operations (as defined in §63.11588, ''What definitions apply to this subpart?'') located at a facility that meets the criteria specified in paragraph (a) of this section.

(1) An affected source is existing if you commenced construction, as defined in §63.2, of the affected source before August 5, 2009.

(2) An affected source is new if you commenced construction or reconstruction, as defined in §63.2, of the affected source on or after August 5, 2009.

(c) On and after December 30, 2009, if your chemical preparations operation becomes a major source, as defined in §63.2, you must continue to meet the requirements of this subpart in addition to any maximum achievable control technology standards which may apply at that time.

(d) This subpart does not apply to research and development facilities, as defined in section 112(c)(7) of the Clean Air Act.

(e) You are exempt from the obligation to obtain a permit under 40 CFR part 70 or 40 CFR part 71, provided you are not otherwise required by law to obtain a permit under 40 CFR 70.3(a) or 40 CFR 71.3(a). Notwithstanding the previous sentence, you must continuously comply with the provisions of this subpart.

(f) You are exempt from the requirements specified in this subpart if the chemical preparations operations at your facility are subject to the requirements specified in subpart VVVVVV or subpart CCCCCCC of this part.

### §63.11580 What are my compliance dates?

(a) If you own or operate an existing affected source, you must achieve compliance with the applicable provisions in this subpart no later than December 30, 2010.

(b) If you start up a new affected source on or before December 30, 2009, you must achieve compliance with this subpart no later than December 30, 2009.

(c) If you start up a new affected source after December 30, 2009, you must achieve compliance with this subpart upon startup of your affected source.

STANDARDS AND COMPLIANCE REQUIREMENTS

### §63.11581 What are my standards?

You must meet one of the requirements in paragraph (a) or (b) of this section that apply to you. These standards apply at all times.

(a) You must meet one of the emission standards in Table 1 of this subpart and the management practices in §63.11584(a) through (c) of this subpart, or

(b) You must demonstrate that the particulate matter concentration of each of the process vent streams from equipment in target HAP service within a chemical preparation operation will not exceed 0.03 gr/dscf and meet the management practices in §63.11584(d).

### §63.11582 What are my compliance requirements?

(a) You must demonstrate initial compliance with the emission reduction or 0.03 gr/dscf particulate matter

(PM) concentration requirements specified in Table 1 of this subpart as follows:

(1) Using the methods specified in Table 2 of this subpart, or

(2) For existing sources only, using the results of an emissions test conducted in the past 5 years, provided the test meets the following requirements.

(i) The test was conducted under conditions that represent normal operation.

(ii) The test was performed using the methods specified in Table 3 of this subpart.

(iii) The test was conducted with a minimum of three separate test runs, as specified in § 63.7(e)(3).

(b) If you choose to demonstrate compliance with the emission reduction or 0.03 gr/dscf PM concentration requirements in Table 1 of this subpart by conducting an emissions test, you must follow the requirements specified in paragraphs (b)(1) through (b)(4) of this section and include the results in your Notification of Compliance Status Report (NOCSR) in accordance with § 63.11585(b)(3).

(1) You must conduct the tests under conditions that represent normal operation.

(2) You must perform the test using the methods specified in Table 3 of this subpart.

(3) You must conduct a minimum of three separate test runs for each performance test required in this section, as specified in § 63.7(e)(3).

(4) You must use the following equation to demonstrate compliance with the emission reduction requirements specified in Table 1 of this subpart:

$$RE = [1 - (Ci - Co)/Ci]*100$$

Where:

RE = PM removal efficiency, percent.

Ci = Concentration of PM at inlet of control device, gr/dscf.

Co = Concentration of PM at outlet of control device, gr/dscf.

(c) If you choose to demonstrate compliance with the emission reduction or 0.03 gr/dscf PM concentration requirements specified in Table 1 of this subpart by providing control device manufacturer's performance guarantee information, then you must include the following information in your NOCSR (in accordance with § 63.11585(b)(3)).

(1) Control device make, model, and installation date.

(2) Performance guarantee certificate provided by the control device manufacturer.

(3) If a filter is used to control PM, performance guarantee information for the fabric or fiber filters used in the control device.

(d) If you choose to demonstrate compliance with the emission reduction or 0.03 gr/dscf PM concentration requirements specified in Table 1 of this subpart by providing engineering calculations, then the calculations and supporting documentation must contain the items specified in paragraphs (d)(1) through (d)(5) of this section. These calculations and supporting documentation must be included in your NOCSR (in accordance with § 63.11585(b)(3)).

(1) Calculations and supporting documentation, such as delivery receipts, production logs and raw material safety data sheets that quantify the amount of raw materials used in the manufacture of chemical preparations (as defined in § 63.11588) in the prior calendar year.

(2) Calculations and supporting documentation, such as sales receipts, production logs and product material safety data sheets (MSDS) for chemical preparations (as defined in § 63.11588) products that quantify the amount of products produced by the chemical preparations operations in the prior calendar year.

(3) Calculations and supporting documentation of raw material losses to the atmosphere from the chemical preparations operations. This quantity (Qi in the equations in paragraph (5) of this section) is the amount of target HAP-containing PM in the uncontrolled air emissions from the chemical preparations operation, and does not include quantified and documented losses to solid or liquid waste streams, or material that is recycled back into the chemical preparations operation.

(4) Calculation and supporting documentation of quantities of target HAP-containing PM captured by the vent collection system and PM control device for the calendar year prior to the compliance date (Qo in the equations in paragraph (5) of this section).

(5) Use one of the following calculation methods to demonstrate compliance with the requirements specified in Table 1 of this subpart:

(i) For emission reduction, use the results of the calculations from paragraphs (d)(3) and (d)(4) of this section in the following equation:

$$RE = [1 - (Qi - Qo)/Qi]*100$$

Where:

RE = Annual average PM removal efficiency, percent.

Qi = Annual amount of PM in uncontrolled emissions, pounds per year.

Qo = Annual amount of PM captured by control device, pounds per year.

(ii) For the 0.03 gr/dscf PM concentration, use the results of calculations from paragraphs (d)(3) and (d)(4) of this section in the following equation:

$$PC = [Qi - Qo]*7000/DCFM*MPY$$

Where:

PC = Annual average PM concentration, grains per dry standard cubic foot (gr/dscf).

Qi = Annual amount of PM in uncontrolled emissions, pounds per year.

Qo = Annual amount of PM captured by control device, pounds per year. (Qo is equal to zero if the process vent stream is not routed to a control device.)

DCFM = Process vent stream flowrate, dscf per minute (dscfm).

MPY = Minutes per year equipment are in target HAP service.

(e) If you are certifying that the particulate matter concentration of each of the process vent streams from equipment in target HAP service within a chemical preparation operation will not exceed 0.03 gr/dscf, then you must:

(1) Include the following information in your NOCSR (in accordance with §63.11585(b)(6)).

(i) A certification statement by the responsible official that certifies that the particulate matter concentration of each of the process vent streams from equipment in target HAP service within a chemical preparation operation will not exceed 0.03 gr/dscf. The statement shall contain that official's name, title, and signature, certifying the truth, accuracy, and completeness of the certification statement.

(ii) Engineering calculations and supporting documentation containing:

(A) The annual raw material losses to the atmosphere from paragraph (d)(3) of this section; and

(B) The calculation of the PM concentration of process vent streams from equipment in target HAP service from paragraph (d)(5)(ii) of this section, using zero for the parameter Qo since there is no control device, given in gr/dscf.

(2) For each subsequent calendar quarter (*i.e.*, three months), maintain the following records to ensure that your certification statement is valid on a continual basis:

(A) The quarterly raw material losses to the atmosphere from paragraph (d)(3) of this section; and

(B) The calculation of the PM concentration of process vent streams from equipment in target HAP service from paragraph (d)(5)(ii) of this section, but on a quarterly basis instead of an annual basis, given in gr/dscf. Use zero for the parameter Qo since there is no control device.

### §63.11583 What are my monitoring requirements?

To demonstrate continuous compliance with the emissions standard in Table 1, you must use one of the monitoring methods described in paragraphs (a), (b) or (c) of this section while equipment within a chemical preparation operation are in target HAP service:

(a) Operate a bag leak detection system with alarm that will alert operators of a leak in the control device filter material. If a bag leak detection system with alarm is used to demonstrate compliance, then the following steps must be performed:

(1) You must install, calibrate, operate, and maintain each bag leak detection system and alarm according to manufacturer's specifications, and as specified in paragraph (a)(2) of this section.

(2) The bag leak detection system and alarm must be maintained and operated in a manner consistent with good air pollution control practices at all times.

(b) Operate a control device parameter (such as pressure drop or water flow, as appropriate) monitor and alarm system that will alert operators

that the control device is operating outside the upper or lower threshold or range established by the control device manufacturer that indicate proper operation of the control device to meet the emissions reduction or PM concentration requirements.

(1) You must install, calibrate, operate, and maintain each control device parameter monitor and alarm system according to manufacturer's specifications, and as specified in paragraph (b)(2) of this section.

(2) The control device parameter monitor and alarm system must be maintained and operated in a manner consistent with good air pollution control practices at all times.

(c) Operate a continuous parameter monitoring system (CPMS) to monitor control device operation. If a CPMS is used to demonstrate compliance, then the following steps must be performed:

(1) Establish and maintain site-specific control device parameter values that indicate proper operation of the control device to meet the emissions reduction or PM concentration requirements.

(2) You must operate the continuous parameter monitoring system (CPMS) during all periods when the process equipment is in target HAP service and use all the data collected during these periods in assessing the operation of the process vent collection system and control device.

(d) You must install, calibrate, operate, and maintain each control device CPMS according to manufacturer's specifications, and as specified in paragraphs (d)(1) through (d)(5) of this section.

(1) The CPMS must be maintained and operated in a manner consistent with good air pollution control practices at all times.

(2) The CPMS must complete a minimum of one cycle of operation for each successive 15-minute period.

(3) To determine the 24-hour rolling average for the monitored parameter(s), you must:

(i) Have data from at least three of four equally spaced data values for that hour from a CPMS, except as stated in paragraph (c)(2) of this section.

(ii) Determine each successive 24-hour rolling average from all recorded readings for each 24-hour period, except as stated in paragraph (c)(2) of this section.

(4) For averaging periods of monitoring data from production in target HAP service less than 24 hours, you must:

(i) Have valid data from at least three of four equally spaced data values for each hour from a CPMS that is not out-of-control according to your manufacturer's recommendations.

(ii) Determine the average from all recorded readings for the production period, except as stated in § 63.11583(c)(2).

(5) You must record the results of each calibration and validation check of the CPMS.

(e) For each pressure measurement device, you must meet the requirements of paragraph (b) or (c) of this section, as applicable, and the following:

(1) Locate the pressure sensor(s) in, or as close as possible to, a position that provides a representative measurement of the pressure.

(2) Use a gauge with a minimum measurement sensitivity of 0.12 kiloPascals or a transducer with a minimum measurement sensitivity of 5 percent of the pressure range.

(3) Check pressure tap for plugging daily. Perform an accuracy check at least quarterly or following an operating parameter deviation:

(i) According to the manufacturer's procedures; or

(ii) By comparing the sensor output to redundant sensor output.

(4) Conduct calibration checks any time the sensor exceeds the manufacturer's specified maximum operating pressure range or install a new pressure sensor.

(5) At least monthly or following an operating parameter deviation, perform a leak check of all components for integrity, all electrical connections for continuity, and all mechanical connections for leakage, if redundant sensors are not used.

(6) You must record the results of the plugging, accuracy and calibration checks specified in paragraphs (e)(3) through (e)(5) of this section in accordance with § 63.11585.

(f) For each monitoring system required in this section, you must develop and make available for inspection by the delegated authority, upon request, a site-specific monitoring plan that addresses the following:

(1) Selection and justification of the monitored parameter that indicates proper operation of the control device to meet the emissions limitation, if the parameter measured is something other than pressure drop.

(2) Installation of the bag leak detector, parameter monitoring device, or CPMS at a measurement location relative to each affected process unit such that the measurement is representative of control of PM emissions (*e.g.*, on the last control device);

(3) Performance and equipment specifications for the parametric signal analyzer, alarm, and the data collection and reduction system, as appropriate; and

(4) Performance evaluation procedures and acceptance criteria according to the manufacturer (*e.g.*, calibrations).

(5) Ongoing operation and maintenance procedures in accordance with the manufacturer's recommendations or the general requirements of § 63.8(c)(1) and (c)(3);

(6) Ongoing data quality assurance procedures in accordance with the manufacturer's recommendations; and

(7) Ongoing recordkeeping and reporting procedures in accordance with the general requirements of § 63.10(c), (e)(1), and (e)(2)(i) and the requirements of § 63.11585.

(g) You must conduct a performance evaluation of each bag leak detection system, control device parameter monitor and alarm system, or CPMS in accordance with your site-specific monitoring plan.

(h) You must operate and maintain each bag leak detection system, control device parameter monitor and alarm system, or CPMS in continuous operation, and collect parametric data at all times that emissions are routed to the monitored control device.

**§ 63.11584 What are my initial and continuous compliance management practice requirements?**

(a) For each new and existing affected source, you must demonstrate initial compliance by conducting the inspection activities in paragraph (a)(1) of this section and demonstrate ongoing compliance by conducting the inspection activities in paragraph (a)(2) of this section.

(1) Initial vent collection system and particulate control device inspections. You must conduct an initial inspection of each vent collection system and particulate control device according to the requirements in paragraphs (a)(1)(i) through (iv) of this section. You must record the results of each inspection according to paragraph (b) of this section and perform corrective action where necessary. You must conduct each inspection no later than 180 days after your applicable compliance date for each control device which has been operated within 180 days following the compliance date. For a control device which has not been installed or operated within 180 days following the compliance date, you must conduct an initial inspection prior to startup of the control device.

(i) For each wet particulate control system, you must verify the presence of water flow to the control equipment. You must also visually inspect the vent collection system ductwork and control equipment for leaks (as defined in § 63.11588, ''What definitions apply to this subpart?'') and inspect the interior of the control equipment (if applicable) for structural integrity and the condition of the control system.

(ii) For each dry particulate control system, you must visually inspect the vent collection system ductwork and dry particulate control unit for leaks (as defined in § 63.11588, ''What definitions apply to this subpart?''). You must also inspect the inside of each dry particulate control unit for structural integrity and condition.

(iii) An initial inspection of the internal components of a wet or dry particulate control system is not required if there is a record that an inspection has been performed within the past 12 months and any maintenance actions have been resolved.

(iv) An initial inspection of ductwork that is unsafe or difficult to inspect is not required.

(2) Ongoing vent collection system and particulate control device inspections. Following the initial inspections, you must perform periodic inspections of each vent collection system and PM control device according to the requirements in paragraphs (a)(2)(i) or (ii) of this section. You must record the results of each inspection according to paragraph (b) of this section and perform corrective action where necessary.

(i) You must inspect and maintain each wet control system according to the requirements in paragraphs (a)(2)(i)(A) through (D) of this section.

(A) You must conduct a daily inspection to verify the presence of water flow to the wet particulate control system.

(B) You must conduct monthly visual inspections of the vent collection system ductwork and wet particulate control equipment for leaks (as defined in § 63.11588, ''What definitions apply to this subpart?'').

(C) You must conduct inspections of the interior of the wet control system (if applicable) to determine the structural integrity and condition of the control equipment every 12 months.

(D) You are required to inspect ductwork that is unsafe or difficult to inspect only during periods when it is safe or physically possible to do so.

(ii) You must inspect and maintain each dry particulate control unit according to the requirements in paragraphs (a)(2)(ii)(A) through (C) of this section.

(A) You must conduct monthly visual inspections of the vent collection system ductwork for leaks (as defined in § 63.11588, ''What definitions apply to this subpart?'').

(B) You must conduct inspections of the interior of the dry particulate control unit for structural integrity and to determine the condition of the fabric filter (if applicable) every 12 months.

(C) You are required to inspect ductwork that is unsafe or difficult to inspect only during periods when it is safe or physically possible to do so.

(b) You must record the information specified in paragraphs (b)(1) through (6) of this section for each inspection activity.

(1) The date, place, and time;

(2) Person conducting the activity;

(3) Method of inspection;

(4) Operating conditions during the activity;

(5) Results; and

(6) Description of any correction actions taken.

(c) At all times the owner or operator must operate and maintain any affected source, including associated air pollution control equipment and monitoring equipment, in a manner consistent with safety and good air pollution control practices for minimizing emissions. The general duty to minimize emissions does not require the owner or operator to make any further efforts to reduce emissions if levels required by this standard have been achieved. Determination of whether such operation and maintenance procedures are being used will be based on information available to the Administrator which may include, but is not limited to, monitoring results, review of operation and maintenance procedures, review of operation and maintenance records, and inspection of the source.

(d) If you have provided certification that each process vent stream from equipment in target HAP service will not contain a PM concentration greater than 0.03 gr/dscf, the management practice requirements are as follows:

(1) You must conduct an initial visual inspection of the vent collection system ductwork for leaks (as defined in § 63.11588, ''What definitions apply to this subpart?'').

(2) You must conduct monthly visual inspections of the vent collection system ductwork for leaks (as defined in § 63.11588, ''What definitions apply to this subpart?'').

(3) You are required to inspect ductwork that is unsafe or difficult to inspect only during periods when it is safe or physically possible to do so.

(4) You must record the information specified in paragraphs (d)(4)(i) through (iv) of this section for each inspection.

(i) The date, place, and time;

(ii) Person conducting the activity;

(iii) Results; and

(iv) Description of any correction actions taken.

### §63.11585 What are my notification, recordkeeping, and reporting requirements?

(a) What General Provision notification, recordkeeping and reporting requirements must I meet? You must meet the requirements of 40 CFR part 63 subpart A according to Table 6.

(b) What notifications must I submit and when?

(1) *Initial Notification of Applicability.* If you own or operate an existing affected source, you must submit an initial notification of applicability as required by §63.9(b)(2) no later than April 29, 2010, or no later than 120 days after the source becomes subject to this subpart, whichever is later. If you own or operate a new affected source, you must submit an initial notification of applicability required by §63.9(b)(2) no later than 120 days after initial startup of operation, or no later than 120 days after the source becomes subject to this subpart, or April 29, 2010, whichever is later. The initial notification of applicability must include the information specified in §§63.9(b)(2)(i) through (iii).

(2) Notification of Intent to conduct a Performance Test. If you elect to conduct a performance test, you must submit a notification of intent to conduct a performance test at least 60 calendar days before the performance test is scheduled to begin, as required in §63.7(b)(1).

(3) Notification of Compliance Status Report (NOCSR). You must submit a NOCSR according to §63.9(h)(2)(ii). You must submit the NOCSR, including the performance test results, if applicable, before the close of business on the 60th calendar day following the applicable compliance date specified in §63.11580 or completion of the performance test, whichever is sooner. The NOCSR must include the information in §63.9(h)(2)(i)(A) through (G) necessary to demonstrate compliance with the emission standard as of the applicable compliance date.

(4) If you have an existing source and are using data from a previously conducted performance test to serve as documentation of compliance with the emission reduction or 0.03 gr/dscf PM concentration requirements of this subpart, you must submit the test data in lieu of the initial performance test results with the NOCSR required under paragraph (b)(3) of this section.

(5) You must provide the results of the initial management practices required by §63.11584(a)(1) and (d)(1).

(6) If you are providing certification that the particulate matter concentration of each of the process vent streams from equipment in target HAP service within a chemical preparation operation will not exceed 0.03 gr/dscf, you must submit this certification in the NOCSR required in paragraph (b)(3) of this section. You must submit the certification statement, including the supporting calculations or performance test results, if applicable. The certification statement and supporting documentation must include the information in §63.11582(e)(1) necessary to demonstrate compliance with the emission standard as of the compliance date.

(c) What reports must I submit and when?

(1) You must submit compliance reports as specified in Table 5 of this subpart that applies to you.

(2) Unless the Administrator has approved a different schedule for submission of reports under §63.10(a), you must submit each compliance report specified in Table 5 of this subpart according to the following dates:

(i) If deviations occur, then:

(A) The first compliance report must cover the period beginning on the compliance date that is specified for your affected source in §63.11580 and ending on June 30 or December 31, whichever date is the first date following the end of the first calendar half after the compliance date that is specified for your source in §63.11580 (*i.e.*, December 31 for a source that is existing with a compliance date of December 30, 2010).

(B) The first compliance report must be postmarked or delivered no later than July 31 or January 31, whichever date follows the end of the first calendar half after the compliance date that is specified for your affected source in §63.11580 (*i.e.*, January 31 for a source that is existing with a compliance date of December 30, 2010).

(C) Each subsequent compliance report for a period in which deviations occur must cover the semiannual reporting period from January 1 through June 30 or the semiannual reporting period from July 1 through December 31.

(D) Each subsequent compliance report for a period in which deviations occur must be postmarked or delivered no later than July 31 or January 31, whichever date is the first date following the end of the semiannual reporting period.

(ii) If no deviations occur, then:

(A) The first compliance report must cover the period beginning on the compliance date that is specified for your affected source in § 63.11580 and ending on December 31 following the end of the first calendar year after the compliance date that is specified for your source in § 63.11580.

(B) The first compliance report must be postmarked or delivered no later than January 31 following the end of the first calendar year after the compliance date that is specified for your affected source in § 63.11580.

(C) Each subsequent compliance report for a period in which deviations occur must cover the annual reporting period from January 1 through December 31.

(D) Each subsequent compliance report for a period in which no deviations occur must be postmarked or delivered no later than January 31 immediately following the previous calendar year.

(3) The compliance report must contain the following information:

(i) Company name and address.

(ii) Statement by a responsible official with that official's name, title, and signature, certifying the truth, accuracy, and completeness of the content of the report.

(iii) Date of report and beginning and ending dates of the reporting period.

(iv) If there are no deviations from the emission reduction or 0.03 gr/dscf PM concentration requirements as specified in Table 1, a statement that there were no deviations from the emission reduction or 0.03 gr/dscf PM concentration requirements during the reporting period.

(v) If there were no periods during which the CPMS (if a CPMS is used to demonstrate compliance) was out-of-control as defined by the manufacturer's recommendations, a statement that there were no periods during which the CPMS was out-of-control during the reporting period.

(vi) A description of any changes in monitoring systems or CPMS, processes (including changes that establish the basis for certification that the PM concentration from process vents will not exceed 0.03 gr/dscf or the addition of new processes), or controls since the last reporting period or for the first compliance report, since the notification of compliance status report.

(4) For each deviation, as applicable and as defined in § 63.11588, you must include the information in paragraphs (c)(3)(i) through (c)(3)(iii) of this section, and the information in paragraphs (c)(4)(i) through (4)(ix) of this section that apply to you.

(i) The date and time that each deviation started and stopped.

(ii) The date and time that each bag leak detector, parameter monitor, or CPMS was inoperative, except for zero (low-level) and high-level checks.

(iii) If a CPMS is used, the date, time and duration that each CPMS was out-of-control.

(iv) A summary of the total duration of the deviation during the reporting period and the total duration as a percent of the total source operating time during that reporting period.

(v) A list of reasons for the deviations during the reporting period.

(vi) If a CPMS is used, a summary of the total duration of CPMS downtime during the reporting period and the total duration of CPMS downtime as a percent of the total source operating time during that reporting period.

(vii) A brief description of the process units.

(viii) A brief description of the bag leak detector, parameter monitor, or CPMS.

(ix) If a CPMS is used, the date of the latest CPMS certification or audit.

(5) If acceptable to both the Administrator and you, you may submit reports and notifications electronically.

(d) What records must I maintain?

(1) You must maintain the following records:

(i) A copy of each notification and report that you submitted to comply with this subpart, including all documentation supporting any Initial Notification of Applicability or NOCSR that you submitted, according to the requirements in § 63.10(b)(2)(xiv).

(ii) Records identifying periods when the chemical preparations operation is in target HAP service using:

(A) Production records showing the dates and times the chemical preparations operation is processing target HAP-containing materials; and

(B) Material safety data sheets (MSDS) of target HAP-containing materials being processed.

(iii) Records of performance tests and performance evaluations as required in § 63.10(b)(2)(viii).

(iv) Records of CPMS (if a CPMS is used to demonstrate compliance) calibration checks and adjustments and maintenance performed on CPMS as required by § 63.10(b)(2)(x) and (xi).

(v) Records of CPMS as required by § 63.10(c) and § 63.11583(d)(5).

(vi) Records of all inspections as required by § 63.11584(b) and pressure measurement device checks (if applicable) as required by § 63.11583(e)(6).

(vii) Records of the site-specific monitoring plan developed according to § 63.11583(f).

(viii) Records of particulate control device manufacturing specifications and recommendations.

(2) You must maintain the records specified in paragraph (d)(1) of this section in accordance with paragraphs (d)(2)(i) through (d)(2)(iii) of this section.

(i) Your records must be in a form suitable and readily available for expeditious review, according to § 63.10(b)(1).

(ii) As specified in § 63.10(b)(1), you must keep each record for 5 years following the date of each recorded action.

(iii) You must keep each record onsite for at least 2 years after the date of each recorded action according to § 63.10(b)(1). You may keep the records offsite for the remaining 3 years.

(3) If you are providing certification that the particulate matter concentration of each of the process vent streams from equipment in target HAP service within a chemical preparation operation will not exceed 0.03 gr/dscf, you must maintain the following records according to paragraphs (d)(2)(i) through (d)(2)(iii) of this section:

(i) Records of the initial certification statement and supporting documentation specified in paragraph (b)(6) of this section.

(ii) Records of ductwork inspections specified in § 63.11584(d)(4).

(iii) Records of the quarterly raw material losses to the atmosphere and process vent stream PM concentration calculations specified in § 63.11582(e)(2).

[74 FR 69208, Dec. 30, 2009, as amended at 85 FR 73921, Nov. 19, 2020]

OTHER REQUIREMENTS AND INFORMATION

### § 63.11586 Who implements and enforces this subpart?

(a) This subpart can be implemented and enforced by the U.S. Environmental Protection Agency (U.S. EPA) or a delegated authority such as your State, local, or Tribal agency. If the U.S. EPA Administrator has delegated authority to your State, local, or Tribal agency, then that agency (the delegated authority), in addition to the U.S. EPA, has the authority to implement and enforce this subpart. You should contact your U.S. EPA Regional Office to find out if implementation and enforcement of this subpart has been delegated.

(b) In delegating implementation and enforcement authority of this subpart to a State, local, or Tribal agency under 40 CFR part 63, subpart E, the following authorities are retained by the Administrator of U.S. EPA:

(1) Approval of alternatives to the requirements in §§ 63.11579, 63.11580, 63.11581, 63.11582, 63.11583, and 63.11584.

(2) Approval of major changes to test methods under § 63.7(e)(2)(ii) and (f) and as defined in § 63.90.

(3) Approval of major changes to monitoring under § 63.8(f) and as defined in § 63.90.

(4) Approval of major changes to recordkeeping and reporting under § 63.10(f) and as defined in § 63.90.

### § 63.11587 What General Provisions sections apply to this subpart?

You must comply with the requirements of the General Provisions (40 CFR part 63, subpart A) according to Table 6 of this subpart.

### § 63.11588 What definitions apply to this subpart?

*Chemical preparation* means a target HAP-containing product, or intermediate used in the manufacture of other products, manufactured in a process operation described by the NAICS code 325998 if the operation manufactures target HAP-containing products or intermediates other than indelible ink, India ink, writing ink, and stamp pad ink. Indelible ink, India ink, writing ink, and stamp pad ink manufacturing operations are subject to regulation by the paints and allied products area source rule (40 CFR part 63, subpart CCCCCCC).

*Chemical preparations facility* means any facility-wide collection of chemical preparation operations.

*Chemical preparations operation* means the collection of mixing, blending, milling, and extruding equipment used to manufacture chemical preparations. A chemical preparation operation may include all, or only some, of the equipment listed above, depending on the chemical preparation being manufactured. Mixing and blending equipment may be used to process either wet or dry materials, or a combination of wet and dry materials. Milling equipment includes, but is not limited to, various types of rolling mills, rotary mills, and grinders. Extruding equipment, for the purposes of this subpart, includes direct and indirect extruders, spray driers, and prilling towers.

*Deviation* means any instance in which an affected source subject to this subpart, or an owner or operator of such a source:

(1) Fails to meet any requirement or management practice established by this subpart;

(2) Fails to meet any term or condition that is adopted to implement a requirement in this subpart and that is included in the operating permit for any affected source required to obtain such a permit; or

(3) Fails to meet any emissions limit.

*In target HAP service* means that equipment in the chemical preparation operation either contains, contacts, or is processing target HAP-containing materials.

*Leak* means a break in the integrity of the vent collection or control device system (*i.e.*, in the duct work, piping, *etc.*) such that visual particulate emissions, liquids or residue form outside the vent collection system or control device.

*Process vent stream* means a gas stream from any equipment in target HAP service at the point where that gas stream is discharged from a vent collection system to the atmosphere, or inlet of a control device, if any.

*Research and development equipment* means any equipment whose primary purpose is to conduct research and development to develop new processes and products, where such equipment is operated under the close supervision of technically trained personnel and is not engaged in the manufacture of products for commercial sale in commerce, except in a *de minimis* manner.

*Responsible official* means one of the following:

(1) For a corporation: A president, secretary, treasurer, or vice president of the corporation in charge of a principal business function, or any other person who performs similar policy or decision-making functions for the corporation, or a duly authorized representative of such person if the representative is responsible for the overall operation of one or more chemical preparations facilities;

(2) For a partnership: A general partner;

(3) For a sole proprietorship: The owner; or

(4) For a municipality, State, Federal, or other public agency: Either a principal executive officer or ranking official.

*Target HAP* means metal compounds for chromium, lead, manganese, and nickel.

*Target HAP-containing* means raw materials, intermediates, or products that contain one or more target HAP. Any material that contains compounds of chromium (VI), lead, or nickel in amounts greater than or equal to 0.1 percent by weight (as the metal), or

manganese or chromium (III) compounds in amounts greater than or equal to 1.0 percent by weight (as the metal) is considered to be target HAP-containing. Target HAP content is shown in the formulation data provided by the manufacturer or supplier, such as the Material Safety Data Sheet for the material.

*Unsafe or difficult to inspect* means the equipment cannot be inspected without elevating the inspection personnel more than two meters above a support surface or it is not accessible at anytime in a safe manner.

*Vent collection system* means hoods, enclosures, ductwork and fans utilized to remove particulate emissions from chemical preparations operations work areas.

TABLE 1 TO SUBPART BBBBBBB OF PART 63—EMISSION REDUCTION AND PM CONCENTRATION REQUIREMENTS

| For each * * * | You must * * * | Using * * * |
|---|---|---|
| 1. Process Vent Stream from equipment in target HAP service. | Route the process vent stream to a PM control device with:<br>a. A PM percent reduction efficiency of 95 percent (98 percent for new sources), or.<br>b. An outlet concentration of 0.03 gr/dscf or less. | Vent collection system and PM control device, such as a wet scrubber or fabric filter, that are maintained and operated per manufacturer's recommendations. |

TABLE 2 TO SUBPART BBBBBBB OF PART 63—INITIAL COMPLIANCE DEMONSTRATION METHODS WITH THE EMISSION REDUCTION AND PM CONCENTRATION REQUIREMENTS

| If you are demonstrating compliance with the * * * | You must demonstrate initial compliance by one of the following methods * * * |
|---|---|
| 1. Requirement to route all process vent streams from equipment in target HAP service to a PM control device with a PM percent reduction efficiency of 95 percent (98 percent for new sources) or an outlet concentration of 0.03 gr/dscf or less.. | a. Perform a PM emissions test using the methods listed in Table 3 to this subpart; or<br>b. Provide performance guarantee information from the control device manufacturer that certifies the device is capable of reducing PM concentrations by 95 percent (98 percent for new sources) or achieves an outlet concentration of 0.03 gr/dscf or less; or<br>c. Provide engineering calculations, such as mass balance and flow rate calculations, that demonstrate that the control device is capable of reducing PM concentration from the chemical preparations operation process vent streams by 95 percent (98 percent for new sources) or achieving an outlet concentration of 0.03 gr/dscf or less. |
| 2. Certification that all process vent streams from equipment in target HAP service will not contain a PM concentration greater than 0.03 gr/dscf. | a. Perform a PM emissions test using the methods listed in Table 3 to this subpart; or<br>b. Provide engineering calculations, such as mass balance and flow rate calculations, that demonstrate that the PM concentration from the chemical preparations operation process vent streams will not be greater than 0.03 gr/dscf. |

TABLE 3 TO SUBPART BBBBBBB OF PART 63—TEST METHODS

| For * * * | You must use * * * |
|---|---|
| 1. Selecting the sampling locations[a] and the number of traverse points. | EPA test method 1 or 1A in appendix A to part 60. |
| 2. Determining the velocity and volumetric flow rate. | EPA test method 2, 2A, 2C, 2D, 2F, or 2G, as appropriate, in appendix A to part 60. |
| 3. Determining the gas molecular weight used for flow rate determination. | EPA test method 3, 3A, 3B, as appropriate, in appendix A to part 60. |
| 4. Measuring the moisture content of the stack gas. | EPA test method 4 in appendix A to part 60. |
| 5. Measuring the PM emissions ..... | EPA test method 5 in appendix A to part 60. |

[a] The sampling locations must be located at the outlet of the process equipment (or control device, if applicable), prior to any releases to the atmosphere.

TABLE 4 TO SUBPART BBBBBBB OF PART 63—CONTINUOUS COMPLIANCE DEMONSTRATION METHODS WITH THE EMISSION REDUCTION AND PM CONCENTRATION REQUIREMENTS

| If you are demonstrating compliance with the * * * | You must demonstrate continuous compliance by * * * |
|---|---|
| 1. Requirement to route all process vent streams from equipment in target HAP service to a PM control device with a PM percent reduction efficiency of 95 percent (98 percent for new sources) or an outlet concentration of 0.03 gr/dscf or less. | Using one of the following monitoring methods:<br>a. A bag leak detector and alarm system, that notifies operators when a leak in the filter media is detected.<br>b. A control device parameter monitor and alarm system, that notifies operators when the control device is operating outside of the upper or lower thresholds established by the control device manufacturer. Monitored parameters may include electricity supply to vent collection system fans, pressure drop across the control device, or scrubber liquor flow to the control device, as appropriate to the particulate matter control device being used.<br>c. A CPMS, and maintaining records of data verifying that the vent collection system and control device were operated within the range of parameters established to comply with the emission reduction or 0.03 gr/dscf PM concentration requirements (*i.e.,* according to manufacturer's recommendations or at the conditions used during the most recent performance test) while the chemical preparations operation was in target HAP service. The control device monitoring data are averaged over a 24-hour period or an overall average per batch, whichever is less, while the chemical preparations operation is in target HAP service. Monitored parameters may include electricity supply to vent collection system fans, pressure drop across the control device, or scrubber liquor flow to the control device, as appropriate to the particulate matter control device being used. |
| 2. Certification that all process vent streams from equipment in target HAP service will not contain a PM concentration greater than 0.03 gr/dscf. | a. Conducting monthly visual inspections of the vent collection system ductwork for leaks. |

TABLE 5 TO SUBPART BBBBBBB OF PART 63—REPORTING REQUIREMENTS

| If you are demonstrating compliance with the * * * | You must submit a compliance report as follows * * * |
|---|---|
| 1. Requirement to route all process vent streams from equipment in target HAP service to a PM control device with a PM percent reduction efficiency of 95 percent (98 percent for new sources) or an outlet concentration of 0.03 gr/dscf or less. | a. An initial notice of compliance status report (NOCSR) as specified in § 63.11585(b)(3), and then as follows in (b) or (c) as applicable to you:<br>b. If there were no deviations during the reporting period, you must submit an annual report containing:<br>1. A statement that there were no deviations from the requirement to route all process vent streams from equipment in target HAP service to a PM control device that achieves a PM percent reduction efficiency of 95 percent (98 percent for new sources) or an outlet concentration of 0.03 gr/dscf or less during the reporting period.<br>2. If there were no periods during which the process vent collection system and control device was not operating normally (*i.e.,* according to manufacturer's recommendations or at the conditions used during the most recent performance test), a statement that the vent collection system and control device were operated normally at all times during the reporting period.<br>c. If you have a deviation from the requirement to route all process vent streams from equipment in target HAP service to a PM control device that achieves a PM percent reduction efficiency of 95 percent (98 percent for new sources) or to an outlet concentration of 0.03 gr/dscf or less, or periods where the vent collection system or control device were not operated normally, then you must submit a semi-annual report for that reporting period. The report must contain the information specified in § 63.11585(c). |
| 2. Certification that all process vent streams from equipment in target HAP service will not contain a PM concentration greater than 0.03 gr/dscf. | a. An initial NOCSR as specified in § 63.11585(b)(3) that contains the following items:<br>1. A statement certifying that all process vent streams from equipment in target HAP service will not contain a PM concentration greater than 0.03 gr/dscf. The statement shall contain that official's name, title, and signature, certifying the truth, accuracy, and completeness of the certification statement.<br>2. Test results or engineering calculations that demonstrate process vent streams covered by the certification will not contain a PM concentration greater than 0.03 gr/dscf. |

TABLE 6 TO SUBPART BBBBBBB OF PART 63—GENERAL PROVISIONS

| Citation | Subject | Applies to subpart BBBBBBB |
|---|---|---|
| § 63.1 | Applicability | Yes. |
| § 63.2 | Definitions | Yes. |
| § 63.3 | Units and Abbreviations | Yes. |
| § 63.4 | Prohibited Activities | Yes. |
| § 63.5 | Construction/Reconstruction | Yes. |
| § 63.6(a)–(d) | Compliance with Standards and Maintenance Requirements. | Yes. |
| § 63.6(e)(1)(i)–(ii) | Operation and Maintenance Requirements | No. |
| § 63.6(e)(1)(iii) | Operation and Maintenance Requirements | Yes. |
| § 63.6(e)(2) | [Reserved]. | |
| § 63.6(e)(3) | Startup, Shutdown, and Malfunction Plan | No. Subpart BBBBBBB does not require startup, shutdown, and malfunction plans. |
| § 63.6(f)(1) | Compliance with Non-Opacity Emissions Standards—Applicability. | No. The emission limits apply at all times. |
| § 63.6(f)(2)–(3) | Methods for Determining Compliance and Finding of Compliance. | Yes. |
| § 63.6(g) | Use of an Alternative Non-Opacity Emission Standard. | Yes. |
| § 63.6(h) | Opacity/Visible Emission (VE) Standards | No. Subpart BBBBBBB does not contain opacity or VE standards. |
| § 63.6(i) | Compliance Extension | Yes. |
| § 63.6(j) | Presidential Compliance Exemption | Yes. |
| § 63.7(a)–(d) | Performance Testing Requirements | Yes. |
| § 63.7(e)(1) | Performance Testing Requirements | No. Subpart BBBBBBB specifies the conditions under which performance tests must be conducted. |
| § 63.7(e)(2)–(4) | Conduct of Performance Tests and Data Reduction | Yes. |
| § 63.7(f)–(h) | Use of Alternative Test Method; Data Analysis, Recordkeeping, and Reporting; and Waiver of Performance Tests. | Yes. |
| § 63.8(a)(1) | Applicability of Monitoring Requirements | Yes. |
| § 63.8(a)(2) | Performance Specifications | No. Subpart BBBBBBB does not require CEMS to demonstrate compliance. |
| § 63.8(a)(3) | [Reserved]. | |
| § 63.8(a)(4) | Monitoring with Flares | No. |
| § 63.8(b)(1) | Monitoring | Yes. |
| § 63.8(b)(2)–(3) | Multiple Effluents and Multiple Monitoring Systems | Yes. |
| § 63.8(c)(1) | Monitoring System Operation and Maintenance | Yes. |
| § 63.8(c)(1)(i) | CMS maintenance | Yes. |
| § 63.8(c)(1)(ii) | Spare Parts for CMS Malfunction | Yes. |
| § 63.8(c)(1)(iii) | Compliance with Operation and Maintenance Requirements. | No. Subpart BBBBBBB does not require startup, shutdown, and malfunction plans. |
| § 63.8(c)(2)–(3) | Monitoring System Installation | Yes. |
| § 63.8(c)(4) | CMS Requirements | No. Subpart BBBBBBB does not require CEMS to demonstrate compliance. |
| § 63.8(c)(5) | COMS Minimum Procedures | No. Subpart BBBBBBB does not contain opacity or VE standards. |
| § 63.8(c)(6) | CMS Requirements | Yes, for CPMS provisions only. Subpart BBBBBBB does not require CEMS to demonstrate compliance. |
| § 63.8(c)(7)–(8) | CMS Requirements | No. Subpart BBBBBBB does not require CEMS to demonstrate compliance. |
| § 63.8(d) | CMS Quality Control | No. Subpart BBBBBBB does not require CEMS to demonstrate compliance. |
| § 63.8(e)–(g) | CMS Performance Evaluation | No. Subpart BBBBBBB does not require CEMS to demonstrate compliance. |
| § 63.9 | Notification Requirements | Yes. Except Initial Notification shall be submitted in accordance with the schedule in § 63.11585. |
| § 63.10(a),(b)(1), (b)(2)(viii)–(xi),(c), (e)(1), (e)(2)(i), (f). | Recordkeeping and Reporting Requirements | Yes. |
| § 63.11 | Control Device and Work Practice Requirements | Yes. |
| § 63.12 | State Authority and Delegations | Yes. |
| § 63.13 | Addresses of State Air Pollution Control Agencies and EPA Regional Offices. | Yes. |

| Citation | Subject | Applies to subpart BBBBBBB |
|---|---|---|
| § 63.14 | Incorporations by Reference | Yes. |
| § 63.15 | Availability of Information and Confidentiality | Yes. |
| § 63.16 | Performance Track Provisions | No. |

## Subpart CCCCCCC—National Emission Standards for Hazardous Air Pollutants for Area Sources: Paints and Allied Products Manufacturing

SOURCE: 74 FR 63525, Dec. 3, 2009, unless otherwise noted.

APPLICABILITY AND COMPLIANCE DATES

### § 63.11599 Am I subject to this subpart?

(a) You are subject to this subpart if you own or operate a facility that performs paints and allied products manufacturing that is an area source of hazardous air pollutant (HAP) emissions and processes, uses, or generates materials containing HAP, as defined in § 63.11607.

(b) The affected source consists of all paints and allied products manufacturing processes that process, use, or generate materials containing HAP at the facility.

(1) An affected source is existing if you commenced construction or reconstruction before June 1, 2009.

(2) An affected source is new if you commenced construction or reconstruction of the affected source on or after June 1, 2009.

(3) A facility becomes an affected source when you commence processing, using, or generating materials containing HAP, as defined in § 63.11607.

(c) You are exempt from the obligation to obtain a permit under 40 CFR part 70 or 40 CFR part 71, provided you are not otherwise required by law to obtain a permit under 40 CFR 70.3(a) or 40 CFR 71.3(a). Whether you have a title V permit or not, you must continue to comply with the provisions of this subpart.

(d) An affected source is no longer subject to this subpart if the facility no longer processes, uses, or generates materials containing HAP and does not plan to process, use or generate materials containing HAP in the future.

(e) The standards of this subpart do not apply to research and development facilities, as defined in section 112(c)(7) of the CAA.

[74 FR 63525, Dec. 3, 2009, as amended at 75 FR 10186, Mar. 5, 2010]

### § 63.11600 What are my compliance dates?

(a) If you own or operate an existing affected source, you must achieve compliance with the applicable provisions in this subpart by December 3, 2012.

(b) If you own or operate a new affected source, you must achieve compliance with the applicable provisions of this subpart by December 3, 2009, or upon startup of your affected source, whichever is later.

(c) If you own or operate a facility that becomes an affected source in accordance with § 63.11599(b)(3) after the applicable compliance date in paragraphs (a) or (b) of this section, you must achieve compliance with the applicable provisions of this subpart by the date that you commence processing, using, or generating materials containing HAP, as defined in § 63.11607.

STANDARDS, MONITORING, AND COMPLIANCE REQUIREMENTS

### § 63.11601 What are the standards for new and existing paints and allied products manufacturing facilities?

(a) For each new and existing affected source, you must comply with the requirements in paragraphs (a)(1) through (5) of this section. These requirements apply at all times.

(1) You must add the dry pigments and solids that contain compounds of cadmium, chromium, lead, or nickel and operate a capture system that minimizes fugitive particulate emissions during the addition of dry pigments and solids that contain compounds of cadmium, chromium, lead, or nickel to a process vessel or to the grinding and milling process.

(2) You must capture particulate emissions and route them to a particulate control device meeting the requirements of paragraph (a)(6) of this section during the addition of dry pigments and solids that contain compounds of cadmium, chromium, lead, or nickel to a process vessel. This requirement does not apply to pigments and other solids that are in paste, slurry, or liquid form.

(3) You must:

(i) Capture particulate emissions and route them to a particulate control device meeting the requirements of paragraph (a)(6) of this section during the addition of dry pigments and solids that contain compounds of cadmium, chromium, lead, or nickel to the grinding and milling process; or

(ii) Add pigments and other solids that contain compounds of cadmium, chromium, lead, or nickel to the grinding and milling process only in paste, slurry, or liquid form.

(4) You must:

(i) Capture particulate emissions and route them to a particulate control device meeting the requirements of paragraph (a)(5) of this section during the grinding and milling of materials containing compounds of cadmium, chromium, lead, or nickel; or

(ii) Fully enclose the grinding and milling equipment during the grinding and milling of materials containing compounds of cadmium, chromium, lead, or nickel; or

(iii) Ensure that the pigments and solids are in the solution during the grinding and milling of materials containing compounds of cadmium, chromium, lead, or nickel.

(5) The visible emissions from the particulate control device exhaust must not exceed 10-percent opacity for particulate control devices that vent to the atmosphere. This requirement does not apply to particulate control devices that do not vent to the atmosphere.

(6) [Reserved]

(b) For each new and existing affected source, you must comply with the requirements in paragraphs (b)(1) through (5) of this section.

(1) Process and storage vessels that store or process materials containing benzene or methylene chloride, except for process vessels which are mixing vessels, must be equipped with covers or lids meeting the requirements of paragraphs (b)(1)(i) through (iii) of this section.

(i) The covers or lids can be of solid or flexible construction, provided they do not warp or move around during the manufacturing process.

(ii) The covers or lids must maintain contact along at least 90-percent of the vessel rim. The 90-percent contact requirement is calculated by subtracting the length of any visible gaps from the circumference of the process vessel, and dividing this number by the circumference of the process vessel. The resulting ratio must not exceed 90-percent.

(iii) The covers or lids must be maintained in good condition.

(2) Mixing vessels that store or process materials containing benzene or methylene chloride must be equipped with covers that completely cover the vessel, except as necessary to allow for safe clearance of the mixer shaft.

(3) All vessels that store or process materials containing benzene or methylene chloride must be kept covered at all times, except for quality control testing and product sampling, addition of materials, material removal, or when the vessel is empty. The vessel is empty if:

(i) All materials containing benzene or methylene chloride have been removed that can be removed using the practices commonly employed to remove materials from that type of vessel, e.g., pouring, pumping, and aspirating; and

(ii) No more than 2.5 centimeters (one inch) depth of residue remains on the bottom of the vessel, or no more than 3 percent by weight of the total capacity of the vessel remains in the vessel.

(4) Leaks and spills of materials containing benzene or methylene chloride must be minimized and cleaned up as soon as practical, but no longer than 1 hour from the time of detection.

(5) Rags or other materials that use a solvent containing benzene or methylene chloride for cleaning must be kept in a closed container. The closed container may contain a device that allows pressure relief, but does not allow

liquid solvent to drain from the container.

[74 FR 63525, Dec. 3, 2009, as amended at 75 FR 10186, Mar. 5, 2010]

### § 63.11602 What are the performance test and compliance requirements for new and existing sources?

(a) For each new and existing affected source, you must demonstrate initial compliance by conducting the inspection and monitoring activities in paragraph (a)(1) of this section and ongoing compliance by conducting the inspection and testing activities in paragraph (a)(2) of this section.

(1) Initial particulate control device inspections and tests. You must conduct an initial inspection of each particulate control device according to the requirements in paragraphs (a)(1)(i) through (iii) of this section and perform a visible emissions test according to the requirements of paragraph (a)(1)(iv) of this section. You must record the results of each inspection and test according to paragraph (b) of this section and perform corrective action where necessary.You must conduct each inspection no later than 180 days after your applicable compliance date for each control device which has been operated within 60 days following the compliance date. For a control device which has not been installed or operated within 60 days following the compliance date, you must conduct an initial inspection prior to startup of the control device.

(i) For each wet particulate control system, you must verify the presence of water flow to the control equipment. You must also visually inspect the system ductwork and control equipment for leaks and inspect the interior of the control equipment (if applicable) for structural integrity and the condition of the control system.

(ii) For each dry particulate control system, you must visually inspect the system ductwork and dry particulate control unit for leaks. You must also inspect the inside of each dry particulate control unit for structural integrity and condition.

(iii) An initial inspection of the internal components of a wet or dry particulate control system is not required if there is a record that an inspection meeting the requirements of this subsection has been performed within the past 12 months and any maintenance actions have been resolved.

(iv) For each particulate control device, you must conduct a visible emission test consisting of three 1-minute test runs using Method 203C (40 CFR part 51, appendix M). The visible emission test runs must be performed during the addition of dry pigments and solids containing compounds of cadmium, chromium, lead, or nickel to a process vessel or to the grinding and milling equipment. If the average test results of the visible emissions test runs indicate an opacity greater than the applicable limitation in § 63.11601(a), you must take corrective action and retest within 15 days.

(2) Ongoing particulate control device inspections and tests. Following the initial inspections, you must perform periodic inspections of each PM control device according to the requirements in paragraphs (a)(2)(i) or (ii) of this section. You must record the results of each inspection according to paragraph (b) of this section and perform corrective action where necessary. You must also conduct tests according to the requirements in paragraph (a)(2)(iii) of this section and record the results according to paragraph (b) of this section.

(i) You must inspect and maintain each wet particulate control system according to the requirements in paragraphs (a)(2)(i)(A) through (C) of this section.

(A) You must conduct a daily inspection to verify the presence of water flow to the wet particulate control system.

(B) You must conduct weekly visual inspections of any flexible ductwork for leaks.

(C) You must conduct inspections of the rigid, stationary ductwork for leaks, and the interior of the wet control system (if applicable) to determine the structural integrity and condition of the control equipment every 12 months.

(ii) You must inspect and maintain each dry particulate control unit according to the requirements in paragraphs (a)(2)(ii)(A) and (B) of this section.

(A) You must conduct weekly visual inspections of any flexible ductwork for leaks.

(B) You must conduct inspections of the rigid, stationary ductwork for leaks, and the interior of the dry particulate control unit for structural integrity and to determine the condition of the fabric filter (if applicable) every 12 months.

(iii) For each particulate control device, you must conduct a 5-minute visual determination of emissions from the particulate control device every 3 months using Method 22 (40 CFR part 60, appendix A–7). The visible emission test must be performed during the addition of dry pigments and solids containing compounds of cadmium, chromium, lead, or nickel to a process vessel or to the grinding and milling equipment. If visible emissions are observed for two minutes of the required 5-minute observation period, you must conduct a Method 203C (40 CFR part 51, appendix M) test within 15 days of the time when visible emissions were observed. The Method 203C test will consist of three 1-minute test runs and must be performed during the addition of dry pigments and solids containing compounds of cadmium, chromium, lead, or nickel HAP to a process vessel or to the grinding and milling equipment. If the Method 203C test runs indicates an opacity greater than the limitation in §63.11601(a)(5), you must comply with the requirements in paragraphs (a)(2)(iii)(A) through (C) of this section.

(A) You must take corrective action and retest using Method 203C within 15 days. The Method 203C test will consist of three 1-minute test runs and must be performed during the addition of dry pigments and solids containing compounds of cadmium, chromium, lead, or nickel to a process vessel or to the grinding and milling equipment. You must continue to take corrective action and retest each 15 days until a Method 203C test indicates an opacity equal to or less than the limitation in §63.11601(a)(5).

(B) You must prepare a deviation report in accordance with §63.11603(b)(3) for each instance in which the Method 203C opacity results were greater than the limitation in §63.11601(a)(5).

(C) You must resume the visible determinations of emissions from the particulate control device in accordance with paragraph (a)(2)(iii) of this section 3 months after the previous visible determination.

(b) You must record the information specified in paragraphs (b)(1) through (6) of this section for each inspection and testing activity.

(1) The date, place, and time;

(2) Person conducting the activity;

(3) Technique or method used;

(4) Operating conditions during the activity;

(5) Results; and

(6) Description of correction actions taken.

[74 FR 63525, Dec. 3, 2009, as amended at 75 FR 10186, Mar. 5, 2010]

### §63.11603 What are the notification, reporting, and recordkeeping requirements?

(a) *Notifications.* You must submit the notifications identified in paragraphs (a)(1) and (2) of this section.

(1) *Initial Notification of Applicability.* If you own or operate an existing affected source, you must submit an initial notification of applicability required by §63.9(b)(2) no later than June 1, 2010, or no later than 120 days after the source becomes subject to this subpart, whichever is later. If you own or operate a new affected source, you must submit an initial notification of applicability required by §63.9(b)(2) no later than 180 days after initial startup of the operations, or no later than 120 days after the source becomes subject to this subpart, or June 1, 2010, whichever is later. The notification of applicability must include the information specified in paragraphs (a)(1)(i) through (iii) of this section.

(i) The name and address of the owner or operator;

(ii) The address (i.e., physical location) of the affected source; and

(iii) An identification of the relevant standard, or other requirement, that is the basis of the notification and the source's compliance date.

(2) *Notification of Compliance Status.* If you own or operate an existing affected source, you must submit a Notification of Compliance Status in accordance with §63.9(h) of the General Provisions

by June 3, 2013. If you own or operate a new affected source, you must submit a Notification of Compliance Status within 180 days after initial start-up, or by June 1, 2010, whichever is later. If you own or operate an affected source that becomes an affected source in accordance with § 63.11599(b)(3) after the applicable compliance date in § 63.11600 (a) or (b), you must submit a Notification of Compliance Status within 180 days of the date that you commence processing, using, or generating materials containing HAP, as defined in 63.11607. This Notification of Compliance Status must include the information specified in paragraphs (a)(2)(i) and (ii) of this section.

(i) Your company's name and address;

(ii) A statement by a responsible official with that official's name, title, phone number, e-mail address and signature, certifying the truth, accuracy, and completeness of the notification, a description of the method of compliance (i.e., compliance with management practices, installation of a wet or dry scrubber) and a statement of whether the source has complied with all the relevant standards and other requirements of this subpart.

(b) *Annual Compliance Certification Report.* You must prepare an annual compliance certification report according to the requirements in paragraphs (b)(1) through (b)(3) of this section. This report does not need to be submitted unless a deviation from the requirements of this subpart has occurred. When a deviation from the requirements of this subpart has occurred, the annual compliance certification report must be submitted along with the deviation report.

(1) *Dates.* You must prepare and, if applicable, submit each annual compliance certification report according to the dates specified in paragraphs (b)(1)(i) through (iii) of this section.

(i) The first annual compliance certification report must cover the first annual reporting period which begins the day of the compliance date and ends on December 31.

(ii) Each subsequent annual compliance certification report must cover the annual reporting period from January 1 through December 31.

(iii) Each annual compliance certification report must be prepared no later than January 31 and kept in a readily-accessible location for inspector review. If a deviation has occurred during the year, each annual compliance certification report must be submitted along with the deviation report, and postmarked no later than February 15.

(2) *General Requirements.* The annual compliance certification report must contain the information specified in paragraphs (b)(2)(i) through (iii) of this section.

(i) Company name and address;

(ii) A statement in accordance with § 63.9(h) of the General Provisions that is signed by a responsible official with that official's name, title, phone number, e-mail address and signature, certifying the truth, accuracy, and completeness of the notification and a statement of whether the source has complied with all the relevant standards and other requirements of this subpart; and

(iii) Date of report and beginning and ending dates of the reporting period. The reporting period is the 12-month period beginning on January 1 and ending on December 31.

(3) *Deviation Report.* If a deviation has occurred during the reporting period, you must include a description of deviations from the applicable requirements, the time periods during which the deviations occurred, and the corrective actions taken. This deviation report must be submitted along with your annual compliance certification report, as required by paragraph (b)(1)(iii) of this section.

(c) *Records.* You must maintain the records specified I paragraphs (c)(1) through (4) of this section in accordance with paragraphs (c)(5) through (6) of this section, for five years after the date of each recorded action.

(1) As required in § 63.10(b)(2)(xiv), you must keep a copy of each notification that you submitted in accordance with paragraph (a) of this section, and all documentation supporting any Notification of Applicability and Notification of Compliance Status that you submitted.

(2) You must keep a copy of each Annual Compliance Certification Report

prepared in accordance with paragraph (b) of this section.

(3) You must keep records of all inspections and tests as required by §63.11602(b).

(4) Your records must be in a form suitable and readily available for expeditious review, according to §63.10(b)(1).

(5) As specified in §63.10(b)(1), you must keep each record for 5 years following the date of each recorded action.

(6) You must keep each record onsite for at least 2 years after the date of each recorded action according to §63.10(b)(1). You may keep the records offsite for the remaining 3 years.

(d) If you no longer process, use, or generate materials containing HAP after December 3, 2009, you must submit a Notification in accordance with §63.11599(d), which must include the information specified in paragraphs (e)(1) and (2) of this section.

(1) Your company's name and address;

(2) A statement by a responsible official indicating that the facility no longer processes, uses, or generates materials containing HAP, as defined in §63.11607, and that there are no plans to process, use or generate such materials in the future. This statement should also include the date by which the company ceased using materials containing HAP, as defined in 63.11607, and the responsible official's name, title, phone number, e-mail address and signature.

[74 FR 63525, Dec. 3, 2009, as amended at 75 FR 10186, Mar. 5, 2010; 85 FR 73921, Nov. 19, 2020]

### §63.11604 [Reserved]

OTHER REQUIREMENTS AND INFORMATION

### §63.11605 What General Provisions apply to this subpart?

Table 1 of this subpart shows which parts of the General Provisions in §§63.1 through 63.16 apply to you.

### §63.11606 Who implements and enforces this subpart?

(a) This subpart can be implemented and enforced by the U.S. EPA or a delegated authority such as a state, local, or tribal agency. If the U.S. EPA Administrator has delegated authority to a State, local, or tribal agency pursuant to 40 CFR part 63, subpart E, then that Agency has the authority to implement and enforce this subpart. You should contact your U.S. EPA Regional Office to find out if this subpart is delegated to your state, local, or tribal agency.

(b) In delegating implementation and enforcement authority of this subpart to a state, local, or tribal agency under 40 CFR part 63, subpart E, the authorities contained in paragraphs (b)(1) through (4) of this section are retained by the Administrator of the U.S. EPA and are not transferred to the State, local, or tribal agency.

(1) Approval of an alternative nonopacity emissions standard under §63.6(g).

(2) Approval of a major change to test methods under §63.7(e)(2)(ii) and (f). A ''major change to test method'' is defined in §63.90

(3) Approval of a major change to monitoring under §63.8(f). A ''major change to monitoring'' is defined in §63.90.

(4) Approval of a major change to recordkeeping/reporting under §63.10(f). A ''major change to recordkeeping/reporting'' is defined in §63.90. As required in §63.11432, you must comply with the requirements of the NESHAP General Provisions (40 CFR part 63, subpart A) as shown in the following table.

### §63.11607 What definitions apply to this subpart?

Terms used in this subpart are defined in the Clean Air Act, §63.2, and in this section as follows:

*Construction* means the onsite fabrication, erection, or installation of an affected source. Addition of new equipment to an affected source does not constitute construction, but it may constitute reconstruction of the affected source if it satisfies the definition of reconstruction in §63.2.

*Deviation* means any instance in which an affected source subject to this subpart, or an owner or operator of such a source:

(1) Fails to meet any requirement or management practices established by this subpart;

(2) Fails to meet any term or condition that is adopted to implement a requirement in this subpart and that is included in the operating permit for any affected source required to obtain such a permit; or

(3) Fails to meet any emissions limitation or management practice in this subpart.

*Dry particulate control system* means an air pollution control device that uses filtration, impaction, or electrical forces to remove particulate matter in the exhaust stream.

*Fabric filter* means an air collection and control system that utilizes a bag filter to reduce the emissions of metal HAP and other particulate matter.

*Material containing HAP* means a material containing benzene, methylene chloride, or compounds of cadmium, chromium, lead, and/or nickel, in amounts greater than or equal to 0.1 percent by weight for carcinogens, as defined by the Occupational Safety and Health Administration at 29 CFR 1910.1200(d)(4), or 1.0 percent by weight for non-carcinogens, as shown in formulation data provided by the manufacturer or supplier, such as the Material Safety Data Sheet for the material. Benzene and methylene chloride are volatile HAP. Compounds of cadmium, chromium, lead and/or nickel are metal HAP.

*Paints and allied products* means materials such as paints, inks, adhesives, stains, varnishes, shellacs, putties, sealers, caulks, and other coatings from raw materials that are intended to be applied to a substrate and consists of a mixture of resins, pigments, solvents, and/or other additives.

*Paints and allied products manufacturing* means the production of paints and allied products, the intended use of which is to leave a dried film of solid material on a substrate. Typically, the manufacturing processes that produce these materials are described by Standard Industry Classification (SIC) codes 285 or 289 and North American Industry Classification System (NAICS) codes 3255 and 3259 and are produced by physical means, such as blending and mixing, as opposed to chemical synthesis means, such as reactions and distillation. Paints and allied products manufacturing does not include:

(1) The manufacture of products that do not leave a dried film of solid material on the substrate, such as thinners, paint removers, brush cleaners, and mold release agents;

(2) The manufacture of electroplated and electroless metal films;

(3) The manufacture of raw materials, such as resins, pigments, and solvents used in the production of paints and coatings; and

(4) Activities by end users of paints or allied products to ready those materials for application.

*Paints and allied products manufacturing process* means all the equipment which collectively function to produce a paint or allied product. A process may consist of one or more unit operations. For the purposes of this subpart, the manufacturing process includes any, all, or a combination of, weighing, blending, mixing, grinding, tinting, dilution or other formulation. Cleaning operations, material storage and transfer, and piping are considered part of the manufacturing process. This definition does not cover activities by end users of paints or allied products to ready those materials for application. Quality assurance and quality control laboratories are not considered part of a paints and allied products manufacturing process. Research and development facilities, as defined in section 112(c)(7) of the CAA are not considered part of a paints and allied products manufacturing process.

*Particulate matter control device* means any equipment, device, or other article that is designed and/or installed for the purpose of reducing or preventing the discharge of metal HAP emissions to the atmosphere.

*Process vessel* means any stationary or portable tank or other vessel of any capacity and in which mixing, blending, diluting, dissolving, temporary holding, and other processing steps occur in the manufacturing of a coating.

*Responsible official* means one of the following:

(1) For a corporation: A president, secretary, treasurer, or vice president

of the corporation in charge of a principal business function, or any other person who performs similar policy or decision-making functions for the corporation, or a duly authorized representative of such person if the representative is responsible for the overall operation of one or more manufacturing, production, or operating facilities and either:

(i) The facilities employ more than 250 persons or have gross annual sales or expenditures exceeding $25 million (in second quarter 1980 dollars); or

(ii) The delegation of authority to such representative is approved in advance by the Administrator.

(2) For a partnership or sole proprietorship: A general partner or the proprietor, respectively.

(3) For a municipality, State, Federal, or other public agency: Either a principal executive officer or ranking elected official. For the purposes of this part, a principal executive officer of a Federal agency includes the chief executive officer having responsibility for the overall operations of a principal geographic unit of the agency (e.g., a Regional Administrator of the EPA).

(4) For affected sources (as defined in this part) applying for or subject to a title V permit: ''Responsible official'' shall have the same meaning as defined in part 70 or Federal title V regulations in this chapter (42 U.S.C. 7661), whichever is applicable.

*Storage vessel* means a tank, container or other vessel that is used to store volatile liquids that contain one or more of the listed volatile HAP, benzene or methylene chloride, as raw material feedstocks or products. It also includes objects, such as rags or other containers which are stored in the vessel. The following are not considered storage vessels for the purposes of this subpart:

(1) Vessels permanently attached to motor vehicles such as trucks, railcars, barges, or ships;

(2) Pressure vessels designed to operate in excess of 204.9 kilopascals and without emissions to the atmosphere;

(3) Vessels storing volatile liquids that contain HAP only as impurities;

(4) Wastewater storage tanks; and

(5) Process vessels.

*Wet particulate control device* means an air pollution control device that uses water or other liquid to contact and remove particulate matter in the exhaust stream.

[74 FR 63525, Dec. 3, 2009, as amended at 75 FR 31320, June 3, 2010]

**§§ 63.11608–63.11618 [Reserved]**

TABLE 1 TO SUBPART CCCCCCC OF PART 63—APPLICABILITY OF GENERAL PROVISIONS TO PAINTS AND ALLIED PRODUCTS MANUFACTURING AREA SOURCES

As required in § 63.11599, you must meet each requirement in the following table that applies to you. Part 63 General Provisions that apply for Paints and Allied Products Manufacturing Area Sources:

| Citation | Subject | Applies to subpart CCCCCCC |
|---|---|---|
| 63.1 | Applicability | Yes. |
| 63.2 | Definitions | Yes. |
| 63.3 | Units and abbreviations | Yes. |
| 63.4 | Prohibited activities | Yes. |
| 63.5 | Preconstruction review and notification requirements | No. |
| 63.6(a), (b)(1)–(b)(5), (c), (e)(1), (f)(2), (f)(3), (g), (i), (j). | Compliance with standards and maintenance requirements | Yes. |
| 63.7(a), (e), and (f) | Performance testing requirements | Yes. |
| 63.8 | Monitoring requirements | No. |
| 63.9(a)–(d), (i), and (j) | Notification Requirements | Yes. |
| 63.10(a), (b)(1) | Recordkeeping and Reporting | Yes. |
| 63.10(d)(1) | Recordkeeping and Reporting | Yes. |
| 63.11 | Control device and work practice requirements | No. |
| 63.12 | State authority and delegations | Yes. |
| 63.13 | Addresses of state air pollution control agencies and EPA regional offices. | Yes. |
| 63.14 | Incorporation by reference | No. |
| 63.15 | Availability of information and confidentiality | Yes. |

| Citation | Subject | Applies to subpart CCCCCCC |
|---|---|---|
| 63.16 | Performance track provisions | No. |

## Subpart DDDDDDD—National Emission Standards for Hazardous Air Pollutants for Area Sources: Prepared Feeds Manufacturing

SOURCE: 75 FR 546, Jan. 5, 2010, unless otherwise noted.

APPLICABILITY AND COMPLIANCE DATES

### § 63.11619 Am I subject to this subpart?

(a) You are subject to this subpart if you own or operate a prepared feeds manufacturing facility that uses a material containing chromium or a material containing manganese and is an area source of emissions of hazardous air pollutants (HAP).

(b) The provisions of this subpart apply to each new and existing prepared feeds manufacturing affected source. A prepared feeds manufacturing affected source is the collection of all equipment and activities necessary to produce animal feed from the point in the process where a material containing chromium or a material containing manganese is added, to the point where the finished animal feed product leaves the facility. This includes, but is not limited to, areas where materials containing chromium and manganese are stored, areas where materials containing chromium and manganese are temporarily stored prior to addition to the feed at the mixer, mixing and grinding processes, pelleting and pellet cooling processes, packing and bagging processes, crumblers and screens, bulk loading operations, and all conveyors and other equipment that transfer the feed materials throughout the manufacturing facility.

(1) A prepared feeds manufacturing affected source is existing if you commenced construction or reconstruction of the facility on or before July 27, 2009.

(2) A prepared feeds manufacturing affected source is new if you commenced construction or reconstruction of the facility after July 27, 2009.

(3) A collection of equipment and activities necessary to produce animal feed at a prepared feeds manufacturing facility becomes an affected source when you commence using a material containing chromium or a material containing manganese.

(c) An affected source is no longer subject to this subpart if the facility stops using materials containing chromium or manganese.

(d) This subpart does not apply to the facilities identified in paragraphs (d)(1) and (2) of this section.

(1) Prepared feeds manufacturing facilities that do not add any materials containing chromium or manganese to any product manufactured at the facility.

(2) Research or laboratory facilities as defined in section 112(c)(7) of the Clean Air Act (CAA).

(e) You are exempt from the obligation to obtain a permit under 40 CFR part 70 or 40 CFR part 71, provided you are not otherwise required by law to obtain a permit under 40 CFR 70.3(a) or 40 CFR 71.3. Notwithstanding the previous sentence, you must continue to comply with the provisions of this subpart.

### § 63.11620 What are my compliance dates?

(a) If you own or operate an existing affected source, you must achieve compliance with the applicable provisions of this subpart by no later than January 5, 2012.

(b) If you own or operate a new affected source, you must achieve compliance with the applicable provisions of this subpart by January 5, 2010, or upon startup of your affected source, whichever is later.

(c) If you own or operate a facility that becomes an affected source in accordance with § 63.11619 after the applicable compliance date in paragraphs (a) or (b) of this section, you must achieve compliance with the applicable provisions of this subpart by the date

that you commence using a material containing manganese or a material containing chromium.

(d) If the average daily feed production level exceeds 50 tons per day for a calendar year for a facility not complying with the requirement in §63.11621(e) to install and operate a cyclone to control emissions from pelleting operations, you must comply with §63.11621(e) and all associated requirements by July 1 of the year following the one-year period.

STANDARDS, MONITORING, AND COMPLIANCE REQUIREMENTS

### §63.11621 What are the standards for new and existing prepared feeds manufacturing facilities?

You must comply with the management practices and standards in paragraphs (a) through (d) of this section at all times. For pelleting operations at prepared feeds manufacturing facilities with an average daily feed production level exceeding 50 tons per day, you must also comply with the requirements in paragraph (e) of this section at all times if you are a new source, and if you are an existing source, you must also comply with the requirements in paragraph (f) of this section at all times.

(a) In all areas of the affected source where materials containing chromium or manganese are stored, used, or handled, you must comply with the management practices in paragraphs (a)(1) and (2) of this section.

(1) You must perform housekeeping measures to minimize excess dust. These measures must include, but not be limited to, the practices specified in paragraphs (a)(1)(i) through (iii) of this section.

(i) You must use either an industrial vacuum system or manual sweeping to reduce the amount of dust;

(ii) At least once per month, you must remove dust from walls, ledges, and equipment using low pressure air or by other means, and then sweep or vacuum the area;

(iii) You must keep exterior doors in the immediate affected areas shut except during normal ingress and egress, as practicable. This paragraph (a)(1)(iii) does not apply to areas where finished product is stored in closed containers, and no other materials containing chromium or manganese are present.

(2) You must maintain and operate all process equipment in accordance with manufacturer's specifications and in a manner to minimize dust creation.

(b) You must store any raw materials containing chromium or manganese in closed containers.

(c) The mixer where materials containing chromium or manganese are added must be covered at all times when mixing is occurring, except when the materials are being added to the mixer. Materials containing chromium or manganese must be added to the mixer in a manner that minimizes emissions.

(d) For the bulk loading process where materials containing chromium or manganese are loaded into trucks or railcars, you must lessen fugitive emissions by reducing the distance between the loadout spout and the vehicle being loaded by either paragraph (d)(1) or (d)(2) of this section.

(1) Use a device of any kind at the bulk loadout spout that minimizes the distance to the vehicle being loaded.

(2) Use any other means to minimize the distance between the loadout spout and the vehicle being loaded.

(e) For the pelleting operations at new prepared feeds manufacturing facilities with an average daily feed production level exceeding 50 tons per day, you must capture emissions and route them to a cyclone designed to reduce emissions of particulate matter by 95 percent or greater. You must also comply with the provisions in paragraphs (e)(1) through (3) of this section.

(1) You must demonstrate that the cyclone is designed to reduce emissions of particulate matter by 95 percent or greater using one of the methods specified in paragraphs (e)(1)(i) through (iii) of this section.

(i) Manufacturer specifications;

(ii) Certification by a professional engineer or responsible official; or

(iii) A performance test conducted in accordance with §63.11623 of this section.

(2) You must establish an inlet flow rate, inlet velocity, pressure drop, or fan amperage range that represents

proper operation of the cyclone in accordance with the applicable requirement in paragraphs (e)(2)(i), (ii), or (iii) of this section.

(i) If you demonstrate the cyclone design efficiency using manufacturer specifications in accordance with paragraph (e)(1)(i) of this section, the inlet flow rate, inlet velocity, pressure drop, or fan amperage range that represents proper operation of the cyclone must be provided by the manufacturer.

(ii) If you demonstrate the cyclone design efficiency using certification by a professional engineer or responsible official in accordance with paragraph (e)(1)(ii) of this section, this certification must include calculations to establish an inlet flow rate, inlet velocity, pressure drop, or fan amperage range that represents proper operation of the cyclone.

(iii) If you demonstrate the cyclone design efficiency using a performance test in accordance with paragraph (e)(1)(iii) of this section, you must monitor the inlet flow rate, inlet velocity, pressure drop, or fan amperage during the test and establish a range that represents proper operation of the cyclone based on the data obtained during the test.

(3) You must maintain and operate the cyclone in accordance with manufacturer's specifications. If manufacturer's specifications are not available, you must develop and follow standard maintenance and operating procedures that ensure proper operation of the cyclone.

(f) For the pelleting operations at existing prepared feeds manufacturing facilities with an average daily feed production level exceeding 50 tons per day, you must capture emissions and route them to a cyclone. The cyclone must be maintained in accordance with good air pollution control practices and manufacturer's specifications and operating instructions, if available. If manufacturer's specifications and operating instructions are not available, you must develop and follow standard operating procedures that ensure proper operation and maintenance of the cyclone.

[75 FR 546, Jan. 5, 2010, as amended at 76 FR 80265, Dec. 23, 2011]

### § 63.11622 What are the monitoring requirements for new and existing sources?

(a) If you own or operate an affected source required by § 63.11621(d) to use a device at the loadout end of a bulk loader that reduces fugitive emissions from a bulk loading process, you must perform monthly inspections of each device to ensure it is in proper working condition. You must record the results of these inspections in accordance with § 63.11624(c)(4) of this subpart.

(b) If you own or operate an affected source required by § 63.11621(e) or (f) to install and operate a cyclone to control emissions from pelleting operations, you must comply with the inspection and monitoring requirements in paragraphs (b)(1) and either (b)(2) or (b)(3) of this section, as applicable.

(1) You must perform quarterly inspections of the cyclone for corrosion, erosion, or any other damage that could result in air in-leakage, and record the results in accordance with § 63.11624(c).

(2) If you own or operate a new source, you must monitor inlet flow rate, inlet velocity, pressure drop, or fan amperage at least once per day when the pelleting process is in operation. You must also record the inlet flow rate, inlet velocity, pressure drop, or fan amperage in accordance with § 63.11624(c)(4).

(3) If you own or operate an existing source, you must perform a weekly visual inspection of the operating cyclone to ensure it is operating consistent with good air pollution control practices.

[75 FR 546, Jan. 5, 2010, as amended at 76 FR 80265, Dec. 23, 2011]

### § 63.11623 What are the testing requirements?

(a) If you are demonstrating that the cyclone required by § 63.11621(e) is designed to reduce emissions of particulate matter by 95 percent or greater by the performance test option in § 63.11621(e)(1)(iii), you must conduct a test in accordance with paragraph (b) of this section and calculate the percent reduction in accordance with paragraph (c) of this section.

(b) You must use Method 5 in Appendix A to part 60 to determine the particulate matter mass rate at the inlet and outlet of the cyclone. You must conduct at least three runs at the cyclone inlet and three runs at the cyclone outlet. Each run must have a sampling time of at least 60 minutes and a sample volume of at least 0.85 dscm (30 dscf).

(c) You must calculate the percent particulate matter reduction using Equation 1.

$$PM\ RED = \left( \frac{M_{INLET} - M_{OUTLET}}{M_{INLET}} \right) x\,100 \qquad \text{Equation 1}$$

Where:

PM RED = particulate matter reduction, percent;

$M_{INLET}$ = Mass of particulate matter at the inlet of the cyclone, dry basis, corrected to standard conditions, g/min;

$M_{OUTLET}$ = Mass of particulate matter at the outlet of the cyclone, dry basis, corrected to standard conditions, g/min;

### §63.11624 What are the notification, reporting, and recordkeeping requirements?

(a) *Notifications*. You must submit the notifications identified in paragraphs (a)(1) and (2) of this section.

(1) *Initial Notification*. If you are the owner of an affected source you must submit an Initial Notification no later than May 5, 2010, or 120 days after you become subject to this subpart, whichever is later. The Initial Notification must include the information specified in paragraphs (a)(1)(i) through (iv) of this section.

(i) The name, address, phone number and e-mail address of the owner and operator;

(ii) The address (physical location) of the affected source;

(iii) An identification of the relevant standard (*i.e.*, this subpart); and

(iv) A brief description of the operation.

(2) *Notification of Compliance Status*. If you are the owner of an existing affected source, you must submit a Notification of Compliance Status in accordance with §63.9(h) of the General Provisions on or before May 4, 2012. If you are the owner or operator of a new affected source, you must submit a Notification of Compliance Status within 120 days of initial startup, or by October 18, 2010, whichever is later. If you own or operate an affected source that becomes an affected source in accordance with §63.11619(b)(3) after the applicable compliance date in §63.11620 (a) or (b), you must submit a Notification of Compliance Status within 120 days of the date that you commence using materials containing manganese or chromium. This Notification of Compliance Status must include the information specified in paragraphs (a)(2)(i) through (iv) of this section.

(i) Your company's name and address;

(ii) A statement by a responsible official with that official's name, title, phone number, e-mail address and signature, certifying the truth, accuracy, and completeness of the notification and a statement of whether the source has complied with all the relevant standards and other requirements of this subpart;

(iii) If you own or operate a new source required by §63.11621(e) to install and operate a cyclone to control emissions from pelleting operations, the inlet flow rate, inlet velocity, pressure drop, or fan amperage range than constitutes proper operation of the cyclone determined in accordance with §63.11621(e)(2).

(iv) If you own or operate an existing source required by §63.11621(f) to install and operate a cyclone to control emissions from pelleting operations, documentation of what constitutes proper operation of the cyclone determined in accordance with §63.11621(f).

(v) If you own or operate an affected source that is not subject to a requirement in §63.11621(e) or (f) to install and operate a cyclone to control emissions from pelleting operations because your

initial average daily feed production level was 50 tpd or less, documentation of your initial daily pelleting production level determination.

(b) *Annual compliance certification report.* You must, by March 1 of each year, prepare an annual compliance certification report for the previous calendar year containing the information specified in paragraphs (b)(1) through (b)(6) of this section. You must submit the report if you had any instance described by paragraph (b)(3) or (b)(4) of this section.

(1) Your company's name and address.

(2) A statement by a responsible official with that official's name, title, phone number, e-mail address and signature, certifying the truth, accuracy, and completeness of the notification and a statement of whether the source has complied with all the relevant standards and other requirements of this subpart.

(3) If the source is not in compliance, include a description of deviations from the applicable requirements, the time periods during which the deviations occurred, and the corrective actions taken.

(4) If you own or operate a new source that is subject to § 63.11621(e), you must identify all instances when the daily inlet flow rate, inlet velocity, pressure drop, or fan amperage is outside the range that constitutes proper operation of the cyclone submitted as part of your Notification of Compliance Status. In these instances, include the time periods when this occurred and the corrective actions taken.

(5) If you own or operate an existing source that is subject to § 63.11621(f), you must identify all instances when the cyclone was not operating properly as determined in accordance with § 63.11621(f).

(6) If you own or operate an affected source that is not subject to a requirement in § 63.11621(e) or (f) to install and operate a cyclone to control emissions from pelleting operations because your average daily feed production level was 50 tpd or less, notification if your average daily feed production level for the previous year exceeded 50 tpd.

(7) If you own or operate an affected source that was subject to a requirement in § 63.11621(e) or (f) to install and operate a cyclone to control emissions from pelleting operations, notification if your average daily feed production level for the previous year was 50 tpd or less and that you are no longer complying with § 63.11621(e) or (f).

(c) *Records.* You must maintain the records specified in paragraphs (c)(1) through (6) of this section in accordance with paragraphs (c)(7) through (9) of this section.

(1) As required in § 63.10(b)(2)(xiv), you must keep a copy of each notification that you submitted to comply with this subpart in accordance with paragraph (a) of this section, and all documentation supporting any Initial Notification or Notification of Compliance Status that you submitted.

(2) You must keep a copy of each Annual Compliance Certification prepared in accordance with paragraph (b) of this section.

(3) For each device used to comply with the requirements in § 63.11621(d), you must keep the records of all inspections including the information identified in paragraphs (c)(3)(i) through (iii) of this section.

(i) The date, place, and time of each inspection;

(ii) Person performing the inspection;

(iii) Results of the inspection, including the date, time, and duration of the corrective action period from the time the inspection indicated a problem to the time of the indication that the device was replaced or restored to operation.

(4) If you own or operate a new source that is subject to § 63.11621(e), you must keep the records in paragraphs (c)(4)(i) through (v) of this section.

(i) If you demonstrate that the cyclone is designed to reduce emission of particulate matter by 95 percent or greater by manufacturer's specifications in accordance with § 63.11621(e)(1(i), you must keep the records specified in paragraphs (c)(4)(i)(A) through (C) of this section.

(A) Information from the manufacturer regarding the design efficiency of the cyclone,

(B) The inlet flow rate, inlet velocity, pressure drop, or fan amperage range

that represents proper operation of the cyclone,

(C) The operation and maintenance procedures to ensure proper operation of the cyclone.

(ii) If you demonstrate that the cyclone is designed to reduce emissions of particulate matter by 95 percent or greater by certification by a professional engineer in accordance with paragraph §63.11621(e)(1)(ii), you must keep the records specified in paragraphs (c)(4)(ii)(A) through (C) of this section.

(A) Certification regarding the design efficiency of the cyclone, along with supporting information,

(B) The inlet flow rate, inlet velocity, pressure drop, or fan amperage range that represents proper operation of the cyclone,

(C) The standard maintenance and operating procedures that ensure proper operation of the cyclone.

(iii) If you demonstrate that the cyclone is designed to reduce emissions of particulate matter by 95 percent or greater by a performance in accordance with paragraph §63.11621(e)(1)(iii), you must keep the records specified in paragraphs (c)(4)(iii)(A) through (C) of this section.

(A) Results of the testing conducted in accordance with §63.11623,

(B) The inlet flow rate, inlet velocity, pressure drop, or fan amperage range that represents proper operation of the cyclone,

(C) The standard maintenance and operating procedures that ensure proper operation of the cyclone.

(iv) Records of all quarterly inspections including the information identified in paragraphs (c)(4)(iv)(A) through (C) of this section.

(A) The date, place, and time of each inspection;

(B) Person performing the inspection;

(C) Results of the inspection, including the date, time, and duration of the corrective action period from the time the inspection indicated a problem to the time of the indication that the cyclone was restored to proper operation.

(v) Records of the daily inlet flow rate, inlet velocity, pressure drop, or fan amperage measurements, along with the date, time, and duration of the correction action period from the time the monitoring indicated a problem to the time of the indication that the cyclone was restored to proper operation.

(5) If you own or operate an existing source that is subject to §63.11621(f), you must keep the records in paragraphs (c)(5)(i) and (ii) of this section.

(i) Records of all quarterly inspections including the information identified in paragraphs (c)(5)(i)(A) through (C) of this section.

(A) The date, place, and time of each inspection;

(B) Person performing the inspection;

(C) Results of the inspection, including the date, time, and duration of the corrective action period from the time the inspection indicated a problem to the time of the indication that the cyclone was restored to proper operation.

(ii) Records of weekly visual inspections of the operating cyclone, including a record of any corrective action taken as a result of the inspection.

(6) If you own or operate an affected source that is not subject to a requirement in §63.11621(e) or (f) to install and operate a cyclone to control emissions from pelleting operations because your average daily feed production level is 50 tpd or less, feed production records to enable the determination of the average daily feed production level.

(7) Your records must be in a form suitable and readily available for expeditious review, according to §63.10(b)(1).

(8) As specified in §63.10(b)(1), you must keep each record for 5 years following the date of each recorded action.

(9) You must keep each record onsite for at least 2 years after the date of each recorded action according to §63.10(b)(1). You may keep the records offsite for the remaining 3 years.

(d) If you no longer use materials that contain manganese or chromium after January 5, 2010, you must submit a Notification in accordance with §63.11619(c) which includes the information specified in paragraphs (d)(1) and (2) of this section.

(1) Your company's name and address;

(2) A statement by a responsible official indicating that the facility no longer uses materials that contain

chromium or manganese. This statement should also include an effective date for the termination of use of materials that contain chromium or manganese, and the responsible official's name, title, phone number, e-mail address and signature.

[75 FR 546, Jan. 5, 2010, as amended at 75 FR 41994, July 20, 2010; 76 FR 80266, Dec. 23, 2011]

OTHER REQUIREMENTS AND INFORMATION

### § 63.11625 What parts of the General Provisions apply to my facility?

Table 1 of this subpart shows which parts of the General Provisions in §§ 63.1 through 63.16 apply to you.

### § 63.11626 Who implements and enforces this subpart?

(a) This subpart can be implemented and enforced by EPA or a delegated authority such as your State, local, or Tribal agency. If the EPA Administrator has delegated authority to your State, local, or Tribal agency, then that agency has the authority to implement and enforce this subpart. You should contact your EPA Regional Office to find out if implementation and enforcement of this subpart is delegated to your State, local, or Tribal agency.

(b) In delegating implementation and enforcement authority of this subpart to a State, local, or Tribal agency under 40 CFR part 63, subpart E, the authorities contained in paragraph (c) of this section are retained by the EPA Administrator and are not transferred to the State, local, or Tribal agency.

(c) The authorities that cannot be delegated to State, local, or Tribal agencies are specified in paragraphs (c)(1) through (5) of this section.

(1) Approval of an alternative non-opacity emissions standard under § 63.6(g).

(2) Approval of an alternative opacity emissions standard under § 63.6(h)(9).

(3) Approval of a major change to test methods under § 63.7(e)(2)(ii) and (f). A ''major change to test method'' is defined in § 63.90.

(4) Approval of a major change to monitoring under § 63.8(f). A ''major change to monitoring'' is defined in § 63.90.

(5) Approval of a major change to recordkeeping and reporting under § 63.10(f). A ''major change to recordkeeping/reporting'' is defined in § 63.90.

### § 63.11627 What definitions apply to this subpart?

Terms used in this subpart are defined in the CAA, in § 63.2, and in this section.

*Animal feed* includes: Dehydrated alfalfa meal; alfalfa prepared as feed for animals; cubed alfalfa; prepared animal feed; chopped, crushed, or ground barley feed; prepared bird feed; blended animal feed; bone meal prepared as feed for animals and fowls; cattle feeds, supplements, concentrates, and premixes; prepared chicken feeds; cattle feed citrus pulp; complete livestock feed; custom milled animal feed; dairy cattle feeds supplements, concentrates, and premixes; earthworm food and bedding; animal feed concentrates; animal feed premixes; animal feed supplements; prepared animal feeds; specialty animal (*e.g.*, guinea pig, mice, mink) feeds; fish food for feeding fish; custom ground grains for animal feed; cubed hay; kelp meal and pellets animal feed; laboratory animal feed; livestock feeds, supplements, concentrates and premixes; alfalfa meal; bone meal prepared as feed for animals and fowls; livestock micro and macro premixes; mineral feed supplements; animal mineral supplements; pet food; poultry feeds, supplements, and concentrates; rabbit food; shell crushed and ground animal feed; swine feed; swine feed supplements, concentrates, and premixes; and prepared turkey feeds. Feed products produced for dogs and cats are not considered animal feed for the purposes of this subpart.

*Average daily feed production level* means the average amount of animal feed products produced each day over an annual period. The initial determination of the average daily feed production level is based on the one-year period prior to the compliance date for existing sources, or the design rate for new sources. The subsequent average daily feed production levels are determined annually and are based on the amount of animal feed products produced in a calendar year divided by the

number of days in which the production processes were in operation.

*Cyclone* means a mechanically aided collector that uses inertia to separate particulate matter from the gas stream as it spirals through the cyclone.

*Material containing chromium* means a material that contains chromium (Cr, atomic number 24) in amounts greater than or equal to 0.1 percent by weight.

*Material containing manganese* means a material that contains manganese (Mn, atomic number 25) in amounts greater than or equal to 1.0 percent by weight.

*Pelleting operations* means all operations that make pelleted animal feed, including but not limited to, steam conditioning, die-casting, drying, cooling, and crumbling, and granulation.

*Prepared feeds manufacturing facility* means a facility that is primarily engaged in manufacturing animal feed. A facility is primarily engaged in manufacturing animal feed if the production of animal feed comprises greater than 50 percent of the total production of the facility on an annual basis. Facilities primarily engaged in raising or feeding animals are not prepared feed manufacturing facilities. Facilities engaged in the growing of agricultural crops that are used in the manufacturing of feed are not considered prepared feeds manufacturing facilities.

**§§ 63.11628–63.11638 [Reserved]**

TABLE 1 TO SUBPART DDDDDDD OF PART 63—APPLICABILITY OF GENERAL PROVISIONS TO PREPARED FEEDS MANUFACTURING AREA SOURCES

As required in § 63.11619, you must meet each requirement in the following table that applies to you.

| Citation | Subject | Applies to Subpart DDDDDDD? |
|---|---|---|
| 63.1 | Applicability | Yes. |
| 63.2 | Definitions | Yes. |
| 63.3 | Units and Abbreviations | Yes. |
| 63.4 | Prohibited Activities and Circumvention | Yes. |
| 63.5 | Preconstruction Review and Notification Requirements. | No. |
| 63.6(a),(b)(1)–(b)(5), (b)(7), (c), (f)(2)–(3), (g), (i), and (j). | Compliance with Standards and Maintenance Requirements. | Yes. |
| 63.6(e)(1), (e)(3), (f)(1), and (h) | Startup, shutdown, and malfunction requirements and opacity/visible emission standards. | No. Standards apply at all times, including during startup, shutdown, and malfunction events. |
| 63.7 | Performance Testing Requirements | Yes. |
| 63.8 | Monitoring Requirements | Yes. |
| 63.9(a), (b), (c), (d), (h), (i), and (j) | Notification Requirements | Yes. |
| 63.9(e), (f), (g) | | No. |
| 63.10(a),(b)(1), (b)(2)(i)–(iii), (b)(2)(vi)–(xiv), (c), (d)(1), (e), and (f). | Recordkeeping and Reporting Requirements. | Yes. |
| 63.10(b)(2)(iv)–(v), (b)(3), and (d)(2)–(5) | Recordkeeping and Reporting Requirements. | No. |
| 63.11 | Control Device Requirements | No. |
| 63.12 | State Authorities and Delegations | Yes. |
| 63.13 | Addresses | Yes. |
| 63.14 | Incorporations by Reference | Yes. |
| 63.15 | Availability of Information and Confidentiality. | Yes. |
| 63.16 | Performance Track Provisions | Yes. |
| 63.1(a)(5), (a)(7)–(9), (b)(2), (c)(3)–(4), (d), 63.6(b)(6), (c)(3), (c)(4), (d), (e)(2), (e)(3)(ii), (h)(3), (h)(5)(iv), 63.8(a)(3), 63.9(b)(3), (h)(4), 63.10(c)(2)–(4), (c)(9). | Reserved | No. |

## Subpart EEEEEEE—National Emission Standards for Hazardous Air Pollutants: Gold Mine Ore Processing and Production Area Source Category

SOURCE: 76 FR 9480, Feb. 17, 2011, unless otherwise noted.

APPLICABILITY AND COMPLIANCE DATES

### § 63.11640 Am I subject to this subpart?

(a) You are subject to this subpart if you own or operate a gold mine ore processing and production facility as defined in § 63.11651, that is an area source.

(b) This subpart applies to each new or existing affected source. The affected sources are each collection of ''ore pretreatment processes'' at a gold mine ore processing and production facility, each collection of ''carbon processes with mercury retorts'' at a gold mine ore processing and production facility, each collection of ''carbon processes without mercury retorts'' at a gold mine ore processing and production facility, and each collection of ''non-carbon concentrate processes'' at a gold mine ore processing and production facility, as defined in § 63.11651.

(1) An affected source is existing if you commenced construction or reconstruction of the affected source on or before April 28, 2010.

(2) An affected source is new if you commenced construction or reconstruction of the affected source after April 28, 2010.

(c) This subpart does not apply to research and development facilities, as defined in section 112(c)(7) of the Clean Air Act (CAA).

(d) If you own or operate a source subject to this subpart, you must have or you must obtain a permit under 40 CFR part 70 or 40 CFR part 71.

### § 63.11641 What are my compliance dates?

(a) If you own or operate an existing affected source, you must comply with the applicable provisions of this subpart no later than February 17, 2014.

(b) If you own or operate a new affected source, and the initial startup of your affected source is on or before February 17, 2011, you must comply with the provisions of this subpart no later than February 17, 2011.

(c) If you own or operate a new affected source, and the initial startup of your affected source is after February 17, 2011, you must comply with the provisions of this subpart upon startup of your affected source.

STANDARDS AND COMPLIANCE REQUIREMENTS

### § 63.11645 What are my mercury emission standards?

(a) For existing ore pretreatment processes, you must emit no more than 127 pounds of mercury per million tons of ore processed.

(b) For existing carbon processes with mercury retorts, you must emit no more than 2.2 pounds of mercury per ton of concentrate processed.

(c) For existing carbon processes without mercury retorts, you must emit no more than 0.17 pounds of mercury per ton of concentrate processed.

(d) For existing non-carbon concentrate processes, you must emit no more than 0.2 pounds of mercury per ton of concentrate processed.

(e) For new ore pretreatment processes, you must emit no more than 84 pounds of mercury per million tons of ore processed.

(f) For new carbon processes with mercury retorts, you must emit no more than 0.8 pounds of mercury per ton of concentrate processed.

(g) For new carbon processes without mercury retorts, you must emit no more than 0.14 pounds of mercury per ton of concentrate processed.

(h) For new non-carbon concentrate processes, you must emit no more than 0.1 pounds of mercury per ton of concentrate processed.

(i) The standards set forth in this section apply at all times.

### § 63.11646 What are my compliance requirements?

(a) Except as provided in paragraph (b) of this section, you must conduct a mercury compliance emission test within 180 days of the compliance date for all process units at new and existing affected sources according to the requirements in paragraphs (a)(1) through (a)(13) of this section. This

compliance testing must be repeated annually thereafter, with no two consecutive annual compliance tests occurring less than 3 months apart or more than 15 months apart.

(1) You must determine the concentration of mercury and the volumetric flow rate of the stack gas according to the following test methods and procedures:

(i) Method 1 or 1A (40 CFR part 60, appendix A–1) to select sampling port locations and the number of traverse points in each stack or duct. Sampling sites must be located at the outlet of the control device (or at the outlet of the emissions source if no control device is present) and prior to any releases to the atmosphere.

(ii) Method 2, 2A, 2C, 2D, 2F (40 CFR part 60, appendix A–1), or Method 2G (40 CFR part 60, appendix A–2) to determine the volumetric flow rate of the stack gas.

(iii) Method 3, 3A, or 3B (40 CFR part 60, appendix A–2) to determine the dry molecular weight of the stack gas. You may use ANSI/ASME PTC 19.10, ''Flue and Exhaust Gas Analyses'' (incorporated by reference-see §63.14) as an alternative to EPA Method 3B.

(iv) Method 4 (40 CFR part 60, appendix A–3) to determine the moisture content of the stack gas.

(v) Method 29 (40 CFR part 60, appendix A–8) to determine the concentration of mercury, except as provided in paragraphs (a)(1)(vi) and (vii) of this section.

(vi) Upon approval by the permitting authority, ASTM D6784; ''Standard Test Method for Elemental, Oxidized, Particle-Bound and Total Mercury in Flue Gas Generated from Coal-Fired Stationary Sources (Ontario Hydro Method)'' (incorporated by reference—see §63.14) may be used as an alternative to Method 29 to determine the concentration of mercury.

(vii) Upon approval by the permitting authority, Method 30B (40 CFR part 60, appendix A–8) may be used as an alternative to Method 29 to determine the concentration of mercury for those process units with relatively low particulate-bound mercury as specified in Section 1.2 of Method 30B.

(2) A minimum of three test runs must be conducted for each performance test of each process unit. Each test run conducted with Method 29 must collect a minimum sample volume of 0.85 dry standard cubic meters (30 dry standard cubic feet). If conducted with Method 30B or ASTM D6784, determine sample time and volume according to the testing criteria set forth in the relevant method. If the emission testing results for any of the emission points yields a non-detect value, then the minimum detection limit (MDL) must be used to calculate the mass emissions rate (lb/hr) used to calculate the emissions factor (lb/ton) for that emission point and, in turn, for calculating the sum of the emissions (in units of pounds of mercury per ton of concentrate, or pounds of mercury per million tons of ore) for all emission points subject to the emission standard for determining compliance. If the resulting mercury emissions are greater than the MACT emission standard, the owner or operator may use procedures that produce lower MDL results and repeat the mercury emissions testing one additional time for any emission point for which the measured result was below the MDL. If this additional testing is performed, the results from that testing must be used to determine compliance (*i.e.*, there are no additional opportunities allowed to lower the MDL).

(3) Performance tests shall be conducted under such conditions as the Administrator specifies to the owner or operator based on representative performance of the affected source for the period being tested. Upon request, the owner or operator shall make available to the Administrator such records as may be necessary to determine the conditions of performance tests. Performance tests must be conducted under operating conditions (including process or production throughputs) that are based on representative performance. Record and report to the permit authority the process throughput for each test run. For sources with multiple emission units (*e.g.*, two roasters, or a furnace, electrowinning circuit and a mercury retort) ducted to a common control device and stack, compliance testing must be performed either by conducting a single compliance test with all affected emissions

units in operation or by conducting a separate compliance test on each emissions unit. Alternatively, the owner or operator may request approval from the permit authority for an alternative testing approach. If the units are tested separately, any emissions unit that is not tested initially must be tested as soon as is practicable. If the performance test is conducted when all affected units are operating, then the number of hours of operation used for calculating emissions pursuant to paragraphs (a)(6) and (7) of this section must be the total number of hours for the unit that has the greatest total operating hours for that period of time, or based on an appropriate alternative method approved by the permit authority to account for the hours of operation for each separate unit in these calculations.

(4) Calculate the mercury emission rate (lb/hr), based on the average of 3 test run values, for each process unit (or combination of units that are ducted to a common stack and are tested when all affected sources are operating pursuant to paragraph (a)(3) of this section) using Equation (1) of this section:

$$E = Cs * Qs * K \qquad \text{(Eq. 1)}$$

Where:

E = mercury emissions in lb/hr;

Cs = concentration of mercury in the stack gas, in grains per dry standard cubic foot (gr/dscf);

Qs = volumetric flow rate of the stack gas, in dry standard cubic feet per hour; and

K = conversion factor for grains (gr) to pounds (lb), $1.43 \times 10^{-4}$.

(5) Monitor and record the number of one-hour periods each process unit operates during each month.

(6) For the initial compliance determination for both new and existing sources, determine the total mercury emissions for all the full calendar months between the compliance date and the date of the initial compliance test by multiplying the emission rate in lb/hr for each process unit (or combination of units ducted to a common stack that are tested together) by the number of one-hour periods each process unit (or the unit that had the greatest total operating hours among the combination of multiple units with one stack that are tested together, or an alternative method approved by the permit authority, pursuant to paragraph (a)(3) of this section) operated during those full calendar months prior to the initial compliance test. This initial period must include at least 1 full month of operations. After the initial compliance test, for subsequent compliance tests, determine the mercury mass emissions for the 12 full calendar months prior to the compliance test in accordance with the procedures in paragraph (a)(7) of this section. Existing sources may use a previous emission test for their initial compliance determination in lieu of conducting a new test if the test was conducted within one year of the compliance date using the methods specified in paragraphs (a)(1) through (a)(4) of this section, and the tests were representative of current operating processes and conditions. If a previous test is used for their initial compliance determination, 3 to 12 full months of data on hours of operation and production (*i.e.*, million tons of ore or tons of concentrate), including the month the test was conducted, must be used to calculate the emissions rate (in units of pounds of mercury per million tons of ore for the ore pretreatment affected sources, or in units of pounds of mercury per tons of concentrate for the other affected sources).

(7) For compliance determinations following the initial compliance test for new and existing sources, determine the total mercury mass emissions for each process unit for the 12 full calendar months preceding the performance test by multiplying the emission rate in lb/hr for each process unit (or combination of units ducted to a common stack that are tested together) by the number of one-hour periods each process unit (or the unit that had the greatest total operating hours among

the combination of multiple units with one stack that are tested together, or an alternative method approved by the permit authority, pursuant to paragraph (a)(3) of this section) operated during the 12 full calendar months preceding the completion of the performance tests.

(8) You must install, calibrate, maintain and operate an appropriate weight measurement device, mass flow meter, or densitometer and volumetric flow meter to measure ore throughput for each roasting operation and autoclave and calculate hourly, daily and monthly totals in tons of ore according to paragraphs (a)(8)(i) and (a)(8)(ii) of this section.

(i) Measure the weight or the density and volumetric flow rate of the oxidized ore slurry as it exits the roaster oxidation circuit(s) and before the carbon-in-leach tanks. Alternatively, the weight of the ore can be measured ''as fed'' if approved by the permit authority as an acceptable equivalent method to measure amount of ore processed.

(ii) Measure the weight or the density and volumetric flow rate of the ore slurry as it is fed to the autoclave(s). Alternatively, the weight or the density and volumetric flow rate of the oxidized ore slurry can be measured as it exits the autoclave and before the carbon-in-leach tanks if approved by the permit authority as an acceptable equivalent method to measure amount of ore processed.

(9) Measure the weight of concentrate (produced by electrowinning, Merrill Crowe process, gravity feed, or other methods) using weigh scales for each batch prior to processing in mercury retorts or melt furnaces. For facilities with mercury retorts, the concentrate must be weighed in the same state and condition as it is when fed to the mercury retort. For facilities without mercury retorts, the concentrate must be weighed prior to being fed to the melt furnace before drying in any ovens. For facilities that ship concentrate offsite, measure the weight of concentrate as shipped offsite. You must keep accurate records of the weights of each batch of concentrate processed and calculate, and record the total weight of concentrate processed each month.

(10) You must maintain the systems for measuring density, volumetric flow rate, and weight within ±5 percent accuracy. You must describe the specific equipment used to make measurements at your facility and how that equipment is periodically calibrated. You must also explain, document, and maintain written procedures for determining the accuracy of the measurements and make these written procedures available to your permitting authority upon request. You must determine, record, and maintain a record of the accuracy of the measuring systems before the beginning of your initial compliance test and during each subsequent quarter of affected source operation.

(11) Record the weight in tons of ore for ore pretreatment processes and concentrate for carbon processes with mercury retorts, carbon processes without mercury retorts, and for non-carbon concentrate processes on a daily and monthly basis.

(12) Calculate the emissions from each new and existing affected source for the sum of all full months between the compliance date and the date of the initial compliance test in pounds of mercury per ton of process input using the procedures in paragraphs (a)(12)(i) through (a)(12)(iv) of this section to determine initial compliance with the emission standards in §63.11645. This must include at least 1 full month of data. Or, if a previous test is used pursuant to paragraph (a)(6) of this section for the initial compliance test, use a period of time pursuant to paragraph (a)(6) of this section to calculate the emissions for the affected source. After this initial compliance test period, determine annual compliance using the procedures in paragraph (a)(13) of this section for existing sources.

(i) For ore pretreatment processes, divide the sum of mercury mass emissions (in pounds) from all roasting operations and autoclaves during the number of full months between the compliance date and the initial compliance test by the sum of the total amount of gold mine ore processed (in million tons) in these process units during those same full months following the compliance date. Or, if a

previous test is used to determine initial compliance, pursuant to paragraph (a)(6) of this section, then the same 3 to 12 full months of production data (*i.e.*, million tons of ore) and hours of operation referred to in paragraph (a)(6) of this section, must be used to determine the emissions in pounds of mercury per million tons of ore.

(ii) For carbon processes with mercury retorts, divide the sum of mercury mass emissions (in pounds) from all carbon kilns, preg tanks, electrowinning, mercury retorts, and melt furnaces during the initial number of full months between the compliance date and the initial compliance tests by the total amount of concentrate (in tons) processed in these process units during those same full months following the compliance date. If a previous test is used to determine initial compliance, pursuant to paragraph (a)(6) of this section, then the same 3 to 12 full months of production data (*i.e.*, tons of concentrate) and hours of operation referred to in paragraph (a)(6) of this section, must be used to determine the emissions in pounds of mercury per tons of concentrate.

(iii) For carbon processes without mercury retorts, divide the sum of mercury mass emissions (in pounds) from all carbon kilns, preg tanks, electrowinning, and melt furnaces during the initial number of full months between the compliance date and the initial compliance tests by the total amount of concentrate (in tons) processed in these process units during those same full months following the compliance date. If a previous test is used to determine initial compliance, pursuant to paragraph (a)(6) of this section, then the same 3 to 12 full months of production data (*i.e.*, tons of concentrate) and hours of operation referred to in paragraph (a)(6) of this section, must be used to determine the emissions in pounds of mercury per tons of concentrate.

(iv) For non-carbon concentrate processes, divide the sum of mercury mass emissions (in pounds) from mercury retorts and melt furnaces during the initial number of full months between the compliance date and the initial compliance tests by the total amount of concentrate (in tons) processed in these process units during those same full months following the compliance date. If a previous test is used to determine initial compliance, pursuant to paragraph (a)(6) of this section, then the same 3 to 12 full months of production data (*i.e.*, tons of concentrate) and hours of operation referred to in paragraph (a)(6) of this section, must be used to determine the emissions in pounds of mercury per tons of concentrate.

(13) After the initial compliance test, calculate the emissions from each new and existing affected source for each 12-month period preceding each subsequent compliance test in pounds of mercury per ton of process input using the procedures in paragraphs (a)(13)(i) through (iv) of this section to determine compliance with the emission standards in § 63.11645.

(i) For ore pretreatment processes, divide the sum of mercury mass emissions (in pounds) from all roasting operations and autoclaves in the 12-month period preceding a compliance test by the sum of the total amount of gold mine ore processed (in million tons) in that 12-month period.

(ii) For carbon processes with mercury retorts, divide the sum of mercury mass emissions (in pounds) from all carbon kilns, preg tanks, electrowinning, mercury retorts, and melt furnaces in the 12-month period preceding a compliance test by the total amount of concentrate (in tons) processed in these process units in that 12-month period.

(iii) For carbon processes without mercury retorts, divide the sum of mercury mass emissions (in pounds) from all carbon kilns, preg tanks, electrowinning, and melt furnaces in the 12-month period preceding a compliance test by the total amount of concentrate (in tons) processed in these process units in that 12-month period.

(iv) For non-carbon concentrate processes, divide the sum of mercury mass emissions (in pounds) from mercury retorts and melt furnaces in the 12-month period preceding a compliance test by the total amount of concentrate (in tons) processed in these process units in that 12-month period.

(b) At all times, you must operate and maintain any affected source, including associated air pollution control equipment and monitoring equipment, in a manner consistent with safety and good air pollution control practices for minimizing emissions. Determination of whether such operation and maintenance procedures are being used will be based on information available to the Administrator which may include, but is not limited to, monitoring results, review of operation and maintenance procedures, review of operation and maintenance records, and inspection of the source.

### §63.11647 What are my monitoring requirements?

(a) Except as provided in paragraph (a)(5) of this section, you must monitor each roaster for mercury emissions using one of the procedures in paragraphs (a)(1), (a)(2), or (a)(3) of this section and establish operating limits for mercury concentration as described in paragraph (a)(4) of this section.

(1) Perform sampling and analysis of the roaster's exhaust for mercury concentration using EPA Performance Specification 12B (40 CFR part 60, appendix B and Procedure 5 of appendix F) or EPA Method 30B (40 CFR part 60, appendix A–8) at least twice per month. A minimum of two measurements must be taken per month that are at least 11 days apart from other consecutive tests. The mercury concentration must be maintained below the operating limit established in paragraph (a)(4) of this section. The results of the sampling must be obtained within 72 hours of the time the sample is taken.

(i) To determine the appropriate sampling duration, you must review the available data from previous stack tests to determine the upper 99th percentile of the range of mercury concentrations in the exit stack gas. Based on this upper end of expected concentrations, select an appropriate sampling duration that is likely to provide a valid sample and not result in breakthrough of the sampling tubes. If breakthrough of the sampling tubes occurs, you must re-sample within 7 days using a shorter sampling duration.

(ii) If any mercury concentration measurement from the twice per month sampling with PS 12B or Method 30B is higher than the operating limit, the exceedance must be reported to the permit authority as a deviation and corrective actions must be implemented within 48 hours upon receipt of the sampling results. Moreover, within 96 hours of the exceedance, the owner or operator must measure the concentration again (with PS 12B (40 CFR part 60, appendix B and Procedure 5 of appendix F), Method 30B or Method 29 (40 CFR part 60, appendix A–8), or ASTM D6784(incorporated by reference—see §63.14)) and demonstrate to the permit authority that the mercury concentration is no higher than the operating limit, or inform the permit authority that the limit continues to be exceeded. If the measured mercury concentration exceeds the operating limit for mercury concentration after these 96 hours, the exceedance must be reported as a deviation within 24 hours to the permitting authority. The owner or operator must conduct a full compliance test pursuant to §63.11646(a) for the roaster operations within 40 days to determine if the affected source is in compliance with the MACT emission standard. For facilities that have roasters and autoclaves, the owner or operator can use the results of the previous compliance test for the autoclaves to determine the emissions for those process units to be used in the calculations of the emissions for the affected source. If the source is determined to be in compliance, the compliance test may also be used to establish a new operating limit for mercury concentration (in accordance with paragraph (e) of this section).

(2) Install, operate, calibrate, and maintain a continuous emissions monitoring system (CEMS) to continuously measure the mercury concentration in the final exhaust stream from each roaster according to the requirements of Performance Specification 12A (40 CFR part 60, appendix B) except that calibration standards traceable to the National Institute of Standards and Technology are not required. You must perform a data accuracy assessment of the CEMS according to section 5 of Appendix F in part 60 and follow the applicable monitoring requirements in

§ 63.8 as provided in Table 1 to subpart EEEEEEE.

(i) You must continuously monitor the daily average mercury concentration from the roaster and maintain the daily average concentration below the operating limit established in paragraph (a)(4) of this section.

(ii) If the daily average mercury concentration from the CEMs is higher than the operating limit, the exceedance must be reported to the permit authority as a deviation and corrective actions must be implemented within 48 hours upon receipt of the sampling results. Moreover, within 96 hours of the exceedance, the owner or operator must measure the concentration again (with the CEMs (40 CFR part 60, appendix B and Procedure 5 of appendix F) and demonstrate to the permit authority that the mercury concentration is no higher than the operating limit, or inform the permit authority that the limit continues to be exceeded. If the measured mercury concentration exceeds the operating limit for mercury concentration after these 96 hours, the exceedance must be reported as a deviation within 24 hours to the permitting authority, and the owner or operator must conduct a full compliance test pursuant to § 63.11646(a) for the roaster operations within 40 days to determine if the affected source is in compliance with the MACT emission standard. For facilities that have roasters and autoclaves, the owner or operator can use the results of the previous compliance test for the autoclaves to determine the emissions for those process units to be used in the calculations of the emissions for the affected source. If the source is determined to be in compliance, the compliance test results may also be used to establish a new operating limit for mercury concentration (in accordance with paragraph (e) of this section).

(iii) You must submit a monitoring plan that includes quality assurance and quality control (QA/QC) procedures sufficient to demonstrate the accuracy of the CEMS to your permitting authority for approval 180 days prior to your initial compliance test. At a minimum, the QA/QC procedures must include daily calibrations and an annual accuracy test for the CEMS.

(3) Continuously measure the mercury concentration in the final exhaust stream from each roaster using EPA Performance Specification 12B (40 CFR part 60 appendix B and Procedure 5 of appendix F).

(i) You must continuously measure the mercury concentration in the roaster exhaust and maintain the average daily mercury concentration below the operating limit established in paragraph (a)(4) of this section. To determine the appropriate sampling duration, you must review the available data from previous stack tests to determine the upper 99th percentile of the range of mercury concentrations in the exit stack gas. Based on this upper end of expected concentrations, select an appropriate sampling duration that is likely to provide a valid sample and not result in breakthrough of the sampling tubes. If breakthrough of the sampling tubes occurs, you must resample within 7 days using a shorter sampling duration.

(ii) If the daily average mercury concentration is higher than the operating limit, the exceedance must be reported to the permit authority as a deviation and corrective actions must be implemented within 48 hours upon receipt of the sampling results. Moreover, within 96 hours of the exceedance, the owner or operator must measure the concentration again with PS 12B (40 CFR part 60, appendix B and Procedure 5 of appendix F), Method 30B or Method 29 (40 CFR part 60, appendix A–8), or ASTM D6784(incorporated by reference—see § 63.14) and demonstrate to the permit authority that the mercury concentration is no higher than the operating limit, or inform the permit authority that the limit continues to be exceeded. If the measured mercury concentration exceeds the operating limit for mercury concentration after these 96 hours, the exceedance must be reported as a deviation within 24 hours to the permitting authority and the owner or operator must conduct a full compliance test pursuant to § 63.11646(a) for the roaster operations within 40 days to determine if the affected source is in compliance with the MACT emission standard. For facilities that have roasters and autoclaves, the owner or operator can use the results

of the previous compliance test for the autoclaves to determine the emissions for those process units to be used in the calculations of the emissions for the affected source. If the source is determined to be in compliance, the compliance test results may also be used to establish a new operating limit for mercury concentration (in accordance with paragraph (e) of this section).

(4) Use Equation (2) of this section to establish an upper operating limit for mercury concentration as determined by using the procedures in paragraphs (a)(1), (a)(2), or (a)(3) of this section concurrently while you are conducting your annual compliance performance stack tests according to the procedures in §63.11646(a).

$$OLR = C_{test} * (EL/CT) \qquad \text{(Eq 2)}$$

Where:

OLR = mercury concentration operating limit for the roaster (or roasters that share a common stack) (in micrograms per cubic meter);

$C_{test}$ = average mercury concentration measured by the monitoring procedures (PS 12A or PS 12B or 30B) during the compliance performance stack test (in micrograms per cubic meter);

EL = emission standard for ore pretreatment processes (in lb/million tons of ore);

CT = compliance test results for ore pretreatment processes (in lb/million tons of ore).

(5) For roasters that utilize calomel-based mercury control systems for emissions controls, you are not required to perform the monitoring for mercury emissions in paragraphs (a)(1), (a)(2), or (a)(3) of this section if you demonstrate to the satisfaction of your permitting authority that mercury emissions from the roaster are less than 10 pounds of mercury per million tons of ore throughput. If you make this demonstration, you must conduct the parametric monitoring as described below in paragraphs (b) and (c) of this section.

(i) The initial demonstration must include three or more consecutive independent stack tests for mercury at least one month apart on the roaster exhaust stacks. Subsequent demonstrations may be based upon the single stack test required in paragraph (a) of section §63.11646. The results of each of the tests must be less than 10 pounds of mercury per million tons of ore. The testing must be performed according to the procedures in §63.11646(a)(1) through (a)(4) to determine mercury emissions in pounds per hour.

(ii) Divide the mercury emission rate in pounds per hour by the ore throughput rate during the test expressed in millions of tons per hour to determine the emissions in pounds per million tons of ore.

(b) For facilities with roasters and a calomel-based mercury control system that choose to monitor for mercury emissions using the procedures in paragraph (a)(1) of this section or that qualify for and choose to follow the requirements in paragraph (a)(5) of this section, you must establish operating parameter limits for scrubber liquor flow (or line pressure) and scrubber inlet gas temperature and monitor these parameters. You may establish your operating parameter limits from the initial compliance test, according to the manufacturer's specifications, or based on limits established by the permitting authority. If you choose to establish your operating parameter limits from the initial compliance test, monitor the scrubber liquor flow (or line pressure) and scrubber inlet gas temperature during each run of your initial compliance test. The minimum operating limit for scrubber liquor flow rate (or line pressure) is either the lowest value during any run of the initial compliance test or 10 percent less than the average value measured during the compliance test, and your maximum scrubber inlet temperature limit is the highest temperature measured during any run of the initial compliance test or 10 percent higher than the average value measured during the compliance test. You must monitor the scrubber liquor flow rate (or line pressure) and scrubber inlet gas temperature hourly

and maintain the scrubber liquor flow (or line pressure) at or above the established operating parameter and maintain the inlet gas temperature below the established operating parameter limit.

(c) For facilities with roasters and a calomel-based mercury control system that choose to monitor for mercury emissions using the procedures in paragraph (a)(1) of this section or that qualify for and follow the requirements in paragraph (a)(5) of this section, you must establish operating parameter ranges for mercuric ion and chloride ion concentrations or for oxidation reduction potential and pH using the procedures in paragraph (c)(1) or (c)(2) of this section respectively.

(1) Establish the mercuric ion concentration and chloride ion concentration ranges for each calomel-based mercury control system. The mercuric ion concentration and chloride ion concentration ranges for each calomel-based mercury control system must be based on the manufacturer's specifications, or based on approval by your permitting authority. Measure the mercuric ion concentration and chloride ion concentrations at least once during each run of your initial compliance test. The measurements must be within the established concentration range for mercuric ion concentration and chloride ion concentration. Subsequently, you must sample at least once daily and maintain the mercuric ion concentration and chloride ion concentrations within their established range.

(2) Establish the oxidation reduction potential and pH range for each calomel-based mercury control system. The oxidation reduction potential and pH range for each calomel-based mercury control system must be based on the manufacturer's specifications, or based on approval by your permitting authority. Install monitoring equipment to continuously monitor the oxidation reduction potential and pH of the calomel-based mercury control system scrubber liquor. Measure the oxidation reduction potential and pH of the scrubber liquor during each run of your initial compliance test. The measurements must be within the established range for oxidation reduction potential and pH. Subsequently, you must monitor the oxidation reduction potential and pH of the scrubber liquor continuously and maintain it within the established operating range.

(d) If you have an exceedance of a control device operating parameter range provided in paragraphs (b) or (c) of this section, you must take corrective action and bring the parameters back into the established parametric ranges. If the corrective actions taken following an exceedance do not result in the operating parameter value being returned within the established range within 48 hours, a mercury concentration measurement (with PS 12B or PS 12A CEMS (40 CFR part 60, appendix B and Procedure 5 of appendix F), Method 30B or Method 29 (40 CFR part 60, appendix A–8), or ASTM D6784 (incorporated by reference—see § 63.14)) must be made to determine if the operating limit for mercury concentration is being exceeded. The measurement must be performed and the mercury concentration determined within 48 hours (after the initial 48 hours, or a total of 96 hours from the time the parameter range was exceeded). If the measured mercury concentration meets the operating limit for mercury concentration established under § 63.11647(a)(4), the corrective actions are deemed successful, and the owner or operator can request the permit authority to establish a new limit or range for the parameter. If the measured mercury concentration exceeds the operating limit for mercury concentration after these 96 hours, the exceedance must be reported as a deviation within 24 hours to the permitting authority and the owner or operator must conduct a full compliance test pursuant to § 63.11646(a) for the roaster operations within 40 days to determine if the affected source is in compliance with the MACT emission standard. For facilities that have roasters and autoclaves, the owner or operator can use the results of the previous compliance test for the autoclaves to determine the emissions for those process units to be used in the calculations of the emissions for the affected source. If the source is determined to be in compliance with the MACT emission standard, the compliance test may also be

used to establish a new operating limit for mercury concentration (see paragraph (e) of this section).

(e) You may submit a request to your permitting authority for approval to change the operating limits established under paragraph (a)(4) of this section for the monitoring required in paragraph (a)(1),(a)(2), or (a)(3) of this section. In the request, you must demonstrate that the proposed change to the operating limit detects changes in levels of mercury emission control. An approved change to the operating limit under this paragraph only applies until a new operating limit is established during the next annual compliance test.

(f) You must monitor each process unit at each new and existing affected source that uses a carbon adsorber to control mercury emissions using the procedures in paragraphs (f)(1) or (f)(2) of this section. A carbon adsorber may include a fixed carbon bed, carbon filter packs or modules, carbon columns, and other variations.

(1) Continuously sample and analyze the exhaust stream from the carbon adsorber for mercury using Method 30B (40 CFR part 60, appendix A–8) for a duration of at least the minimum sampling time specified in Method 30B and up to one week that includes the period of the annual performance test.

(i) Establish an upper operating limit for the process as determined using the mercury concentration measurements from the sorbent trap (Method 30B) as calculated from Equation (3) of this section.

$$OLC = C_{trap} * (EL/CT) \qquad \text{(Eq 3)}$$

Where:

OLC = mercury concentration operating limit for the carbon adsorber control device on the process as measured using the sorbent trap, (micrograms per cubic meter);

$C_{trap}$ = average mercury concentration measured using the sorbent trap during the week that includes the compliance performance test, (micrograms per cubic meter);

EL = emission standard for the affected sources (lb/ton of concentrate);

CT = compliance test results for the affected sources (lb/ton of concentrate).

(ii) Sample and analyze the exhaust stream from the carbon adsorber for mercury at least monthly using Method 30B (40 CFR part 60, appendix A–8). When the mercury concentration reaches 75 percent of the operating limit, begin weekly sampling and analysis. When the mercury concentration reaches 90 percent of the operating limit, replace the carbon in the carbon adsorber within 30 days. If mercury concentration exceeds the operating limit, change the carbon in the carbon adsorber within 30 days and report the deviation to your permitting authority.

(2) Conduct an initial sampling of the carbon in the carbon bed for mercury 90 days after the replacement of the carbon. A representative sample must be collected from the inlet of the bed and the exit of the bed and analyzed using SW–846 Method 7471B (incorporated by reference—see §63.14). The depth to which the sampler is inserted must be recorded. The design capacity is established by calculating the average carbon loading from the inlet and outlet measurements. Sampling and analysis of the carbon bed for mercury must be performed quarterly thereafter. When the carbon loading reaches 50 percent of the design capacity of the carbon, monthly sampling must be performed until 90 percent of the carbon loading capacity is reached. The carbon must be removed and replaced with fresh carbon no later than 30 days after reaching 90 percent of capacity. For carbon designs where there may be multiple carbon columns or beds, a representative sample may be collected from the first and last column or bed instead of the inlet or outlet. If the carbon loading exceeds the design capacity of the carbon, change the carbon within 30 days and report the deviation to your permitting authority.

(g) You must monitor gas stream temperature at the inlet to the carbon

adsorber for each process unit (*i.e.*, carbon kiln, melt furnace, *etc.*) equipped with a carbon adsorber. Establish a maximum value for the inlet temperature either during the annual performance test (required in § 63.11646(a)), according to the manufacturer's specifications, or as approved by your permitting authority. If you choose to establish the temperature operating limit during the performance test, establish the temperature operating limit based on either the highest reading during the test or at 10 °F higher than the average temperature measured during the performance test. Monitor the inlet temperature once per shift. If an inlet temperature exceeds the temperature operating limit, you must take corrective actions to get the temperature back within the parameter operating limit within 48 hours. If the exceedance persists, within 144 hours of the exceedance, you must sample and analyze the exhaust stream from the carbon adsorber using Method 30B (40 CFR part 60, appendix A–8) and compare to an operating limit (calculated pursuant to (f)(1)(i)) or you must conduct carbon sampling pursuant to (f)(2) of this section. If the concentration measured with Method 30B is below 90 percent of the operating limit or the carbon sampling results are below 90 percent of the carbon loading capacity, you may set a new temperature operating limit 10 °F above the previous operating limit or at an alternative level approved by your permit authority. If the concentration is above 90 percent of the operating limit or above 90 percent of the carbon loading capacity you must change the carbon in the bed within 30 days and report the event to your permitting authority, and reestablish an appropriate maximum temperature limit based on approval of your permit authority.

(h) For each wet scrubber at each new and existing affected source not followed by a mercury control system, you must monitor the water flow rate (or line pressure) and pressure drop. Establish a minimum value as the operating limit for water flow rate (or line pressure) and pressure drop either during the performance test required in § 63.11646(a), according to the manufacturer's specifications, or as approved by your permitting authority. If you choose to establish the operating limit based on the results of the performance test, the new operating limit must be established based on either the lowest value during any test run or 10 percent less than the average value measured during the test. For wet scrubbers on an autoclave, establish the pressure drop range according to manufacturer's specifications. You must monitor the water flow rate and pressure drop once per shift and take corrective action within 24 hours if any daily average is less than the operating limit. If the parameters are not in range within 72 hours, the owner or operator must report the deviation to the permitting authority and perform a compliance test for the process unit(s) controlled with the wet scrubber that has the parameter exceedance within 40 days to determine if the affected source is in compliance with the MACT limit. For the other process units included in the affected source, the owner or operator can use the results of the previous compliance test to determine the emissions for those process units to be used in the calculations of the emissions for the affected source.

(i) You may conduct additional compliance tests according to the procedures in § 63.11646 and re-establish the operating limits required in paragraphs (a) through (c) and (f) through (h) of this section at any time. You must submit a request to your permitting authority for approval to re-establish the operating limits. In the request, you must demonstrate that the proposed change to the operating limit detects changes in levels of mercury emission control. An approved change to the operating limit under this paragraph only applies until a new operating limit is established during the next annual compliance test.

### § 63.11648 What are my notification, reporting, and recordkeeping requirements?

(a) You must submit the Initial Notification required by § 63.9(b)(2) no later than 120 calendar days after the date of publication of the final rule in the FEDERAL REGISTER or within 120 days after the source becomes subject to the standard. The Initial Notification must

include the information specified in §63.9(b)(2)(i) through (b)(2)(iv).

(b) You must submit an initial Notification of Compliance Status as required by §63.9(h).

(c) If a deviation occurs during a semiannual reporting period, you must submit a deviation report to your permitting authority according to the requirements in paragraphs (c)(1) and (2) of this section.

(1) The first reporting period covers the period beginning on the compliance date specified in §63.11641 and ending on June 30 or December 31, whichever date comes first after your compliance date. Each subsequent reporting period covers the semiannual period from January 1 through June 30 or from July 1 through December 31. Your deviation report must be postmarked or delivered no later than July 31 or January 31, whichever date comes first after the end of the semiannual reporting period.

(2) A deviation report must include the information in paragraphs (c)(2)(i) through (c)(2)(iv) of this section.

(i) Company name and address.

(ii) Statement by a responsible official, with the official's name, title, and signature, certifying the truth, accuracy and completeness of the content of the report.

(iii) Date of the report and beginning and ending dates of the reporting period.

(iv) Identification of the affected source, the pollutant being monitored, applicable requirement, description of deviation, and corrective action taken.

(d) If you had a malfunction during the reporting period, the compliance report required in §63.11648(b) must include the number, duration, and a brief description for each type of malfunction which occurred during the reporting period and which caused or may have caused any applicable emission limitation to be exceeded. The report must also include a description of actions taken by an owner or operator during a malfunction of an affected source to minimize emissions in accordance with §63.11646(b), including actions taken to correct a malfunction.

(e) You must keep the records specified in paragraphs (e)(1) through (e)(3) of this section. The form and maintenance of records must be consistent with the requirements in section 63.10(b)(1) of the General Provisions.

(1) As required in §63.10(b)(2)(xiv), you must keep a copy of each notification that you submitted to comply with this subpart and all documentation supporting any Initial Notification, Notification of Compliance Status, and semiannual compliance certifications that you submitted.

(2) You must keep the records of all performance tests, measurements, monitoring data, and corrective actions required by §§63.11646 and 63.11647, and the information identified in paragraphs (c)(2)(i) through (c)(2)(vi) of this section for each corrective action required by §63.11647.

(i) The date, place, and time of the monitoring event requiring corrective action;

(ii) Technique or method used for monitoring;

(iv) Operating conditions during the activity;

(v) Results, including the date, time, and duration of the period from the time the monitoring indicated a problem to the time that monitoring indicated proper operation; and

(vi) Maintenance or corrective action taken (if applicable).

(3) You must keep records of operating hours for each process as required by §63.11646(a)(5) and records of the monthly quantity of ore and concentrate processed or produced as required by §63.11646(a)(10).

(f) Your records must be in a form suitable and readily available for expeditious review, according to §63.10(b)(1). As specified in §63.10(b)(1), you must keep each record for 5 years following the date of each recorded action. You must keep each record onsite for at least 2 years after the date of each recorded action according to §63.10(b)(1). You may keep the records offsite for the remaining 3 years.

(g) After December 31, 2011, within 60 days after the date of completing each performance evaluation conducted to demonstrate compliance with this subpart, the owner or operator of the affected facility must submit the test data to EPA by entering the data electronically into EPA's WebFIRE data

base through EPA's Central Data Exchange. The owner or operator of an affected facility shall enter the test data into EPA's data base using the Electronic Reporting Tool or other compatible electronic spreadsheet. Only performance evaluation data collected using methods compatible with ERT are subject to this requirement to be submitted electronically into EPA's WebFIRE database.

OTHER REQUIREMENTS AND INFORMATION

### § 63.11650 What General Provisions apply to this subpart?

Table 1 to this subpart shows which parts of the General Provisions in §§ 63.1 through 63.16 apply to you.

### § 63.11651 What definitions apply to this subpart?

Terms used in this subpart are defined in the Clean Air Act, in § 63.2, and in this section as follows:

*Autoclave* means a pressure oxidation vessel that is used to treat gold ores (primarily sulfide refractory ore) and involves pumping a slurry of milled ore into the vessel which is highly pressurized with oxygen and heated to temperatures of approximately 350° to 430 °F.

*Calomel-based mercury control system* means a mercury emissions control system that uses scrubbers to remove mercury from the gas stream of a roaster or combination of roasters by complexing the mercury from the gas stream with mercuric chloride to form mercurous chloride (calomel). These scrubbers are also referred to as ''mercury scrubbers.''

*Carbon adsorber* means a control device consisting of a single fixed carbon bed, multiple carbon beds or columns, carbon filter packs or modules, and other variations that uses activated carbon to remove pollutants from a gas stream.

*Carbon kiln* means a kiln or furnace where carbon is regenerated by heating, usually in the presence of steam, after the gold has been stripped from the carbon.

*Carbon processes with mercury retorts* means the affected source that includes carbon kilns, preg tanks, electrowinning cells, mercury retorts, and melt furnaces at gold mine ore processing and production facilities that use activated carbon, or resins that can be used as a substitute for activated carbon, to recover (adsorb) gold from the pregnant cyanide solution.

*Carbon processes without mercury retorts* means the affected source that includes carbon kilns, preg tanks, electrowinning cells, and melt furnaces, but has no retorts, at gold mine ore processing and production facilities that use activated carbon, or resins that can be used as a substitute for activated carbon, to recover (adsorb) gold from the pregnant cyanide solution.

*Concentrate* means the sludge-like material that is loaded with gold along with various other metals (such as silver, copper, and mercury) and various other substances, that is produced by electrowinning, the Merrill-Crowe process, flotation and gravity separation processes. *Concentrate* is measured as the input to mercury retorts, or for facilities without mercury retorts, as the input to melt furnaces before any drying takes place. For facilities without mercury retorts or melt furnaces, *concentrate* is measured as the quantity shipped.

*Deviation* means any instance where an affected source subject to this subpart, or an owner or operator of such a source:

(1) Fails to meet any requirement or obligation established by this subpart, including but not limited to any emissions limitation or work practice standard;

(2) Fails to meet any term or condition that is adopted to implement an applicable requirement in this subpart and that is included in the operating permit for any affected source required to obtain such a permit; or

(3) Exceeds any operating limit established under this subpart.

*Electrowinning* means a process that uses induced voltage on anode and cathode plates to remove metals from the continuous flow of solution, where the gold in solution is plated onto the cathode. Steel wool is typically used as the plating surface.

*Electrowinning Cells* means a tank in which the electrowinning takes place.

*Gold mine ore processing and production facility* means any industrial facility engaged in the processing of gold mine ore that uses any of the following processes: Roasting operations, autoclaves, carbon kilns, preg tanks, electrowinning, mercury retorts, or melt furnaces. Laboratories (see CAA section 112(c)(7)), individual prospectors, and very small pilot scale mining operations that processes or produces less than 100 pounds of concentrate per year are not a gold mine ore processing and production facility. A facility that produces primarily metals other than gold, such as copper, lead, zinc, or nickel (where these metals other than gold comprise 95 percent or more of the total metal production) that may also recover some gold as a byproduct is not a gold mine ore processing and production facility. Those facilities whereby 95 percent or more of total mass of metals produced are metals other than gold, whether final metal production is onsite or offsite, are not part of the gold mine ore processing and production source category.

*Melt furnace* means a furnace (typically a crucible furnace) that is used for smelting the gold-bearing material recovered from mercury retorting, or the gold-bearing material from electrowinning, the Merrill-Crowe process, or other processes for facilities without mercury retorts.

*Mercury retort* means a vessel that is operated under a partial vacuum at approximately 1,100° to 1,300 °F to remove mercury and moisture from the gold bearing sludge material that is recovered from electrowinning, the Merrill-Crowe process, or other processes. Mercury retorts are usually equipped with condensers that recover liquid mercury during the processing.

*Merrill-Crowe process* means a precipitation technique using zinc oxide for removing gold from a cyanide solution. Zinc dust is added to the solution, and gold is precipitated to produce a concentrate.

*Non-carbon concentrate processes* means the affected source that includes mercury retorts and melt furnaces at gold mine ore processing and production facilities that use the Merrill-Crowe process or other processes and do not use carbon (or resins that substitute for carbon) to recover (adsorb) gold from the pregnant cyanide solution.

*Ore dry grinding* means a process in which the gold ore is ground and heated (dried) prior to additional preheating or prior to entering the roaster.

*Ore preheating* means a process in which ground gold ore is preheated prior to entering the roaster.

*Ore pretreatment processes* means the affected source that includes roasting operations and autoclaves that are used to pre-treat gold mine ore at gold mine ore processing and production facilities prior to the cyanide leaching process.

*Pregnant solution tank (or preg tank)* means a storage tank for pregnant solution, which is the cyanide solution that contains gold-cyanide complexes that is generated from leaching gold ore with cyanide solution.

*Pregnant cyanide solution* means the cyanide solution that contains gold-cyanide complexes that are generated from leaching gold ore with a dilute cyanide solution.

*Quenching* means a process in which the hot calcined ore is cooled and quenched with water after it leaves the roaster.

*Roasting operation* means a process that uses an industrial furnace in which milled ore is combusted across a fluidized bed to oxidize and remove organic carbon and sulfide mineral grains in refractory gold ore. The emissions points of the roasting operation subject to this subpart include ore dry grinding, ore preheating, the roaster stack, and quenching.

### § 63.11652 Who implements and enforces this subpart?

(a) This subpart can be implemented and enforced by the U.S. EPA or a delegated authority, such as your state, local, or tribal agency. If the U.S. EPA Administrator has delegated authority to your state, local, or tribal agency, then that agency has the authority to implement and enforce this subpart. You should contact your U.S. EPA Regional Office to find out if this subpart is delegated to your state, local, or tribal agency.

(b) In delegating implementation and enforcement authority of this subpart to a state, local, or tribal agency under 40 CFR part 63, subpart E, the authorities contained in paragraph (c) of this section are retained by the Administrator of the U.S. EPA and are not transferred to the state, local, or tribal agency.

(c) The authorities that will not be delegated to state, local, or tribal agencies are listed in paragraphs (c)(1) through (4) of this section.

(1) Approval of alternatives to the applicability requirements in § 63.11640, the compliance date requirements in § 63.11641, and the applicable standards in § 63.11645.

(2) Approval of an alternative non-opacity emissions standard under § 63.6(g).

(3) Approval of a major change to a test method under § 63.7(e)(2)(ii) and (f). A ''major change to test method'' is defined in § 63.90(a).

(4) Approval of a major change to monitoring under § 63.8(f). A ''major change to monitoring'' is defined in § 63.90(a).

(5) Approval of a waiver of recordkeeping or reporting requirements under § 63.10(f), or another major change to recordkeeping/reporting. A ''major change to recordkeeping/reporting'' is defined in § 63.90(a).

**§ 63.11653 [Reserved]**

TABLE 1 TO SUBPART EEEEEEE OF PART 63—APPLICABILITY OF GENERAL PROVISIONS TO SUBPART EEEEEE

As stated in § 63.11650, you must comply with the applicable General Provisions requirements according to the following table

| Citation | Subject | Applies to subpart EEEEEEE | Explanation |
|---|---|---|---|
| § 63.1(a)(1), (a)(2), (a)(3), (a)(4), (a)(6), (a)(10)–(a)(12), (b)(1), (b)(3), (c)(1), (c)(2), (c)(5), (e). | Applicability | Yes. | |
| § 63.1(a)(5), (a)(7)–(a)(9), (b)(2), (c)(3), (c)(4), (d). | Reserved | No. | |
| § 63.2 | Definitions | Yes. | |
| § 63.3 | Units and Abbreviations | Yes. | |
| § 63.4 | Prohibited Activities and Circumvention. | Yes. | |
| § 63.5 | Preconstruction Review and Notification Requirements. | Yes. | |
| § 63.6(a), (b)(1)–(b)(5), (b)(7), (c)(1), (c)(2), (c)(5), (e)(1)(iii), (f)(2), (f)(3), (g), (i), (j). | Compliance with Standards and Maintenance Requirements. | Yes. | |
| § 63.6(e)(1)(i) and (ii), (e)(3), and (f)(1). | Startup, Shutdown and Malfunction Requirements (SSM). | No | Subpart EEEEEEE standards apply at all times. |
| § 63.6(h)(1), (h)(2), (h)(4),(h)(5)(i), (ii), (iii) and (v), (h)(6)–(h)(9). | Compliance with Opacity and Visible Emission Limits. | No | Subpart EEEEEEE does not contain opacity or visible emission limits. |
| § 63.6(b)(6), (c)(3), (c)(4), (d), (e)(2), (e)(3)(ii), (h)(3), (h)(5)(iv). | Reserved | No. | |
| § 63.7, except (e)(1) | Applicability and Performance Test Dates. | Yes. | |
| § 63.7(e)(1) | Performance Testing Requirements Related to SSM. | No. | |
| § 63.8(a)(1), (b)(1), (f)(1)–(5), (g). | Monitoring Requirements | Yes. | |
| § 63.8(a)(2), (a)(4), (b)(2)–(3), (c), (d), (e), (f)(6), (g). | Continuous Monitoring Systems. | Yes | Except cross references to SSM requirements in § 63.6(e)(1) and (3) do not apply. |
| § 63.8(a)(3) | [Reserved] | No. | |
| § 63.9(a), (b)(1), (b)(2)(i)–(v), (b)(4), (b)(5), (c), (d), (e), (g), (h)(1)–(h)(3), (h)(5), (h)(6), (i), (j). | Notification Requirements | Yes. | |
| § 63.9(f) | | No. | |

| Citation | Subject | Applies to subpart EEEEEEE | Explanation |
|---|---|---|---|
| §63.9(b)(3), (h)(4) | Reserved | No. | |
| §63.10(a), (b)(1), (b)(2)(vi)–(xiv), (b)(3), (c), (d)(1)–(4), (e), (f). | Recordkeeping and Reporting Requirements. | Yes. | |
| §63.10(b)(2)(i)–(v), (d)(5) | Recordkeeping/Reporting Associated with SSM. | No. | |
| §63.10(c)(2)–(c)(4), (c)(9) | Reserved | No. | |
| §63.11 | Control Device Requirements | No. | |
| §63.12 | State Authority and Delegations. | Yes. | |
| §§63.13–63.16 | Addresses, Incorporation by Reference, Availability of Information, Performance Track Provisions. | Yes. | |

## Subparts FFFFFFF and GGGGGGG [Reserved]

## Subpart HHHHHHH—National Emission Standards for Hazardous Air Pollutant Emissions for Polyvinyl Chloride and Copolymers Production

SOURCE: 77 FR 22906, Apr. 17, 2012, unless otherwise noted.

WHAT THIS SUBPART COVERS

### §63.11860 What is the purpose of this subpart?

This subpart establishes national emission standards for hazardous air pollutants emitted from the production of polyvinyl chloride and copolymers at major sources. This subpart also establishes requirements to demonstrate initial and continuous compliance with the emission standards.

### §63.11865 Am I subject to the requirements in this subpart?

You are subject to the requirements in this subpart if you own or operate one or more polyvinyl chloride and copolymers production process units (PVCPU) as defined in §63.12005 that are located at, or are part of, a major source of hazardous air pollutants (HAP) emissions as defined in §63.2. The requirements of this subpart do not apply to research and development facilities, as defined in section 112(c)(7) of the Clean Air Act, or to chemical manufacturing process units, as defined in §63.101, that produce vinyl chloride monomer or other raw materials used in the production of polyvinyl chloride and copolymers.

### §63.11870 What is the affected source of this subpart?

(a) This subpart applies to each polyvinyl chloride and copolymers production affected source.

(b) The polyvinyl chloride and copolymers production affected source is the facility wide collection of PVCPU, storage vessels, heat exchange systems, surge control vessels, wastewater and process wastewater treatment systems that are associated with producing polyvinyl chloride and copolymers.

(c) An existing affected source is one for which construction was commenced on or before May 20, 2011, at a major source.

(d) A new affected source is one for which construction is commenced after May 20, 2011, at a major source.

(e) If components of an existing affected source are replaced such that the replacement meets the definition of reconstruction in §63.2 and the reconstruction commenced after May 20, 2011, then the existing affected source becomes a reconstructed source and is subject to the relevant standards for a new affected source. The reconstructed source must comply with the requirements for a new affected source upon initial startup of the reconstructed source or by April 17, 2012, whichever is later.

### §63.11871 What is the relationship to 40 CFR part 61, subpart F?

After the applicable compliance date specified in §63.11875(a), (b) or (c), an affected source that is also subject to

the provisions of 40 CFR part 61, subpart F, is required to comply with the provisions of this subpart and no longer has to comply with 40 CFR part 61, subpart F.

### § 63.11872 What is the relationship to other subparts in this part?

After the applicable compliance date specified in § 63.11875(a), (b) or (c), an affected source that is also subject to the provisions of other subparts in 40 CFR part 60 or this part is required to comply with this subpart and any other applicable subparts in 40 CFR part 60 or this part.

### § 63.11875 When must I comply with this subpart?

(a) If you own or operate an existing affected source, you must achieve compliance with the applicable provisions in this subpart no later than April 17, 2015. On or after April 17, 2015, any such existing affected source is no longer subject to the provisions of 40 CFR part 61, subpart F.

(b) If you start up a new affected source on or before April 17, 2012, you must achieve compliance with the provisions of this subpart no later than April 17, 2012. On or after April 17, 2012, any such new affected source is not subject to the provisions of 40 CFR part 61, subpart F.

(c) If you start up a new affected source after April 17, 2012, you must achieve compliance with the provisions of this subpart upon startup of your affected source. Upon startup, any such new affected source is not subject to the provisions of 40 CFR part 61, subpart F.

(d) You must meet the notification requirements in §§ 63.9 and 63.11985 according to the dates specified in those sections. Some of the notifications must be submitted before you are required to comply with the emission limits and standards in this subpart.

## EMISSION LIMITS, OPERATING LIMITS AND WORK PRACTICE STANDARDS

### § 63.11880 What emission limits, operating limits and standards must I meet?

(a) You must comply with each emission limit and standard specified in Table 1 to this subpart that applies to your existing affected source, and you must comply with each emission limit and standard specified in Table 2 to this subpart that applies to your new affected source.

(b) You must establish an operating limit for each operating parameter required to be monitored in § 63.11925, and you must establish each operating limit as an operating range, minimum operating level or maximum operating level. You must comply with each established operating limit.

(c) You must comply with the emission limits and standards specified in §§ 63.11910 through 63.11980 that apply to your affected source.

## GENERAL COMPLIANCE REQUIREMENTS

### § 63.11885 What parts of the General Provisions apply to me?

Table 4 to this subpart specifies which parts of the General Provisions in subpart A of this part apply to you.

### § 63.11890 What are my additional general requirements for complying with this subpart?

(a) The emission limits, operating limits and work practice standards specified in this subpart apply at all times, including periods of startup, shutdown or malfunction.

(b) At all times, you must operate and maintain your affected source, including associated air pollution control components and monitoring system components, in a manner consistent with safety and good air pollution control practices for minimizing emissions. Determination of whether acceptable operation and maintenance procedures are being used will be based on information available to the Administrator, which may include, but is not limited to, monitoring results, review of operation and maintenance procedures, review of operation and maintenance records, and inspection of the source.

(c) You must install, calibrate, maintain, and operate all monitoring system components according to §§ 63.8, 63.11935(b) and (c), and paragraphs (c)(1) and (2) of this section.

(1) Except for periods of monitoring system malfunctions, repairs associated with monitoring system malfunctions and required monitoring system

quality assurance or quality control activities (including, as applicable, calibration checks and required zero and span adjustments), you must operate the continuous monitoring system at all times the affected source is operating. A monitoring system malfunction is any sudden, infrequent, not reasonably preventable failure of the monitoring system to provide data. Monitoring system failures that are caused in part by poor maintenance or careless operation are not malfunctions. You are required to complete monitoring system repairs in response to monitoring system malfunctions and to return the monitoring system to operation as expeditiously as practicable.

(2) You may not use data recorded during monitoring system malfunctions, repairs associated with monitoring system malfunctions, or required monitoring system quality assurance or control activities in calculations used to report emissions or operating levels. You must use all the data collected during all other required data collection periods in assessing the operation of the control device and associated control system. You must report any periods for which the monitoring system failed to collect required data.

(d) A deviation means any of the cases listed in paragraphs (d)(1) through (7) of this section.

(1) Any instance in which an affected source subject to this subpart, or an owner or operator of such a source, fails to meet any requirement or obligation established by this subpart, including, but not limited to, any emission limit, operating limit or work practice standard.

(2) When a performance test indicates that emissions of a pollutant in Table 1 or 2 to this subpart are exceeding the emission standard for the pollutant specified in Table 1 or 2 to this subpart.

(3) When a 3-hour block average from a continuous emissions monitor, as required by § 63.11925(c)(1) through (3), exceeds an emission limit in Table 1 or 2 to this subpart.

(4) When the average value of a monitored operating parameter, based on the data averaging period for compliance specified in Table 5 to this subpart, does not meet the operating limit established in § 63.11880(b).

(5) When an affected source discharges directly to the atmosphere from any of the sources specified in paragraphs (d)(5)(i) through (iv) of this section.

(i) A pressure relief device, as defined in § 63.12005.

(ii) A bypass, as defined in § 63.12005.

(iii) A closed vent system in vacuum service.

(iv) A closure device on a pressure vessel.

(6) Any instance in which the affected source subject to this subpart, or an owner or operator of such a source, fails to meet any term or condition specified in paragraph (d)(6)(i) or (ii) of this section.

(i) Any term or condition that is adopted to implement an applicable requirement in this subpart.

(ii) Any term or condition relating to compliance with this subpart that is included in the operating permit for any affected source required to obtain such a permit.

(7) Any failure to collect required data, except for periods of monitoring system malfunctions, repairs associated with monitoring system malfunctions, and required monitoring system quality assurance or quality control activities (including, as applicable, calibration checks and required zero and span adjustments).

### § 63.11895 How do I assert an affirmative defense for exceedance of emission standard during malfunction?

In response to an action to enforce the standards set forth in § 63.11880, you may assert an affirmative defense to a claim for civil penalties for violations of such standards that are caused by malfunction, as defined at 40 CFR 63.2. Appropriate penalties may be assessed, however, if you fail to meet your burden of proving all of the requirements in the affirmative defense. The affirmative defense shall not be available for claims for injunctive relief.

(a) Evidence. To establish the affirmative defense in any action to enforce such a standard, you must timely meet the notification requirements in paragraph (b) of this section, and must

prove by a preponderance of evidence that:

(1) The violation:

(i) Was caused by a sudden, infrequent, and unavoidable failure of air pollution control and monitoring equipment, process equipment, or a process to operate in a normal or usual manner.

(ii) Could not have been prevented through careful planning, proper design or better operation and maintenance practices.

(iii) Did not stem from any activity or event that could have been foreseen and avoided, or planned for.

(iv) Were not part of a recurring pattern indicative of inadequate design, operation or maintenance.

(2) Repairs were made as expeditiously as possible when violation occurred. Off-shift and overtime labor were used, to the extent practicable to make these repairs.

(3) The frequency, amount and duration of the violation (including any bypass) were minimized to the maximum extent practicable.

(4) If the violation resulted from a bypass of control equipment or a process, then the bypass was unavoidable to prevent loss of life, personal injury, or severe property damage.

(5) All possible steps were taken to minimize the impact of the violations on ambient air quality, the environment and human health.

(6) All emissions monitoring and control systems were kept in operation if at all possible, consistent with safety and good air pollution control practices.

(7) All of the actions in response to the violations were documented by properly signed, contemporaneous operating logs.

(8) At all times, the affected source was operated in a manner consistent with good practices for minimizing emissions.

(9) A written root cause analysis has been prepared, the purpose of which is to determine, correct, and eliminate the primary causes of the malfunction and the violations resulting from the malfunction event at issue. The analysis shall also specify, using best monitoring methods and engineering judgment, the amount of excess emissions that were the result of the malfunction.

(b) Report. The owner or operator seeking to assert an affirmative defense shall submit a written report to the Administrator in the compliance report required by § 63.11985(b) with all necessary supporting documentation, that it has met the requirements set forth in this section.

### § 63.11896 What am I required to do if I make a process change at my affected source?

If you make a process change to an existing affected source that does not meet the criteria to become a new affected source in § 63.11870(d), you must comply with the requirements in paragraph (a) of this section and the testing and reporting requirements in paragraphs (c) and (d) of this section. If you make a process change to a new affected source, you must comply with the requirements in paragraph (b) of this section and the testing and reporting requirements in paragraphs (c) and (d) of this section. Refer to § 63.12005 for the definition of process changes.

(a) You must demonstrate that the changed process unit or component of the affected facility is in compliance with the applicable requirements for an existing affected source. You must demonstrate initial compliance with the emission limits and establish any applicable operating limits in § 63.11880 within 180 days of the date of start-up of the changed process unit or component of the affected facility. You must demonstrate compliance with any applicable work practice standards upon startup of the changed process unit or component of the affected facility.

(b) You must demonstrate that all changed emission points are in compliance with the applicable requirements for a new affected source. You must demonstrate initial compliance with the emission limits and establish any applicable operating limits in § 63.11880 within 180 days of the date of startup of the changed process unit or component of the affected facility. You must demonstrate compliance with any applicable work practice standards upon startup of the changed process unit or component of the affected facility.

(c) For process changes, you must demonstrate continuous compliance with your emission limits and standards, operating limits, and work practice standards according to the procedures and frequency in §§63.11910 through 63.11980.

(d) For process changes, you must submit the report specified in §63.11985(b)(4)(iii).

TESTING AND COMPLIANCE REQUIREMENTS

**§63.11900 By what date must I conduct initial performance testing and monitoring, establish any applicable operating limits and demonstrate initial compliance with my emission limits and work practice standards?**

(a) For existing affected sources, you must establish any applicable operating limits required in §63.11880 and demonstrate initial compliance with the emission limits and standards specified in Tables 1 and 3 to this subpart, as applicable, no later than 180 days after the compliance date specified in §63.11875 and according to the applicable provisions in §63.7(a)(2).

(b) For existing affected sources, you must demonstrate initial compliance with any applicable work practice standards required in §63.11880 no later than the compliance date specified in §63.11875 and according to the applicable provisions in §63.7(a)(2).

(c) For new or reconstructed affected sources, you must establish any applicable operating limits required in §63.11880, and demonstrate initial compliance with the emission limits and standards specified in Tables 2 and 3 to this subpart, as applicable, no later than 180 days after the effective date of publication of the final rule in the FEDERAL REGISTER or within 180 days after startup of the source, whichever is later, according to §63.7(a)(2)(ix).

(d) For new and reconstructed affected sources, you must demonstrate initial compliance with any applicable work practice standards required in §63.11880 no later than the startup date of the affected source or the effective date of publication of the final rule in the FEDERAL REGISTER, whichever is later, and according to the applicable provisions in §63.7(a)(2).

(e) If you demonstrate initial compliance using a performance test and a force majeure is about to occur, occurs, or has occurred for which you intend to assert a claim of force majeure, then you must follow the procedures in §63.7(a)(4).

**§63.11905 When must I conduct subsequent performance testing and monitoring to demonstrate continuous compliance?**

Following the date of your initial demonstration of compliance in §63.11900, you must conduct subsequent performance testing and monitoring to demonstrate continuous compliance with your emission limits, operating limits, and work practice standards according to the procedures and frequency in §§63.11910 through 63.11980. If you make a process change as specified in §63.11896, such that a different emission limit or operating parameter limit applies, you must conduct a performance test according to §63.11896.

**§63.11910 What are my initial and continuous compliance requirements for storage vessels?**

You must comply with the requirements specified in Table 3 to this subpart for each storage vessel in HAP service.

(a) For each fixed roof storage vessel used to comply with the requirements specified in Table 3 to this subpart, you must meet the requirements in paragraphs (a)(1) through (4) of this section. If you elect to use a fixed roof storage vessel vented to a closed vent system and control device, the closed vent system and control device must meet the requirements in §§63.11925 through 63.11950.

(1) *Design requirements.* (i) The fixed roof must be installed in a manner such that there are no visible cracks, holes, gaps, or other open spaces between roof section joints or between the interface of the roof edge and the tank wall.

(ii) Each opening in the fixed roof must be equipped with a closure device designed to operate such that when the closure device is secured in the closed position there are no visible cracks, holes, gaps, or other open spaces in the

closure device or between the perimeter of the opening and the closure device.

(2) *Operating requirements.* (i) Except as specified in paragraph (a)(2)(ii) of this section, the fixed roof must be installed with each closure device secured in the closed position.

(ii) Opening of closure devices or removal of the fixed roof is allowed under conditions specified in paragraphs (a)(2)(ii)(A) and (B) of this section.

(A) A closure device may be opened or the roof may be removed when needed to provide access.

(B) A conservation vent that vents to the atmosphere is allowed during normal operations to maintain the tank internal operating pressure within tank design specifications. Normal operating conditions that may require these devices to open are during those times when the internal pressure of the storage vessel is outside the internal pressure operating range for the storage vessel as a result of loading or unloading operations or diurnal ambient temperature fluctuations.

(iii) During periods of planned routine maintenance of a control device, operate the storage vessel in accordance with paragraphs (a)(2)(iii)(A) and (B) of this section. You must keep the records specified in § 63.11990(b)(6).

(A) Do not add material to the storage vessel during periods of planned routine maintenance.

(B) Limit periods of planned routine maintenance for each control device to no more than 360 hours per year (hr/yr).

(3) *Inspection and monitoring requirements.* (i) Visually inspect the fixed roof and its closure devices for defects initially and at least once per calendar year except as specified in paragraph (a)(3)(ii) of this section. Defects include, but are not limited to, visible cracks, holes, or gaps in the roof sections or between the roof and the wall of the storage vessel; broken, cracked or otherwise damaged seals, or gaskets on closure devices; and broken or missing hatches, access covers, caps or other closure devices.

(ii) The inspection requirement specified in paragraph (a)(3)(i) of this section does not apply to parts of the fixed roof that you determine are unsafe to inspect because operating personnel would be exposed to an imminent or potential danger as a consequence of complying with paragraph (a)(3)(i) of this section, provided you comply with the requirements specified in paragraphs (a)(3)(ii)(A) and (B) of this section.

(A) You prepare and maintain at the plant site written documentation that identifies all parts of the fixed roof that are unsafe to inspect and explains why such parts are unsafe to inspect.

(B) You develop and implement a written plan and schedule to conduct inspections the next time alternative storage capacity becomes available and the storage vessel can be emptied or temporarily removed from service, as necessary, to complete the inspection. The required inspections must be performed as frequently as practicable but do not need to be performed more than once per calendar year. You must maintain a copy of the written plan and schedule at the plant site.

(4) *Repair requirements.* (i) Complete repair of a defect as soon as possible, but no later than 45 days after detection. You must comply with the requirements in this paragraph (a)(4)(i) except as provided in paragraph (a)(4)(ii) of this section.

(ii) Repair of a defect may be delayed beyond 45 days if you determine that repair of the defect requires emptying or temporary removal from service of the storage vessel and no alternative storage capacity is available at the site to accept the removed material. In this case, repair the defect the next time alternative storage capacity becomes available and the storage vessel can be emptied or temporarily removed from service.

(b) If you elect to use an internal floating roof storage vessel or external floating roof storage vessel to comply with the requirements specified in Table 3 to this subpart, you must meet all requirements of §§ 63.1060 through 63.1067 of subpart WW of this part for internal floating roof storage vessels or external floating roof storage vessels, as applicable.

(c) For each pressure vessel used to comply with the requirements specified in Table 3 to this subpart, you must meet the requirements in paragraphs (c)(1) through (4) of this section.

(1) Whenever the pressure vessel is in hazardous air pollutants (HAP) service, you must operate the pressure vessel as a closed system that does not vent to the atmosphere, e.g., during filling, emptying and purging. The vent stream during filling, emptying and purging must meet the requirements of §63.11925(a) and (b).

(2) Each opening in the pressure vessel must be equipped with a closure device designed to operate such that when the closure device is secured in the closed position there are no visible cracks, holes, gaps or other open spaces in the closure device or between the perimeter of the opening and the closure device.

(3) All potential leak interfaces must be monitored annually for leaks using the procedures specified in §63.11915 and you may adjust for background concentration. You must comply with the recordkeeping provisions specified in §63.11990(b)(4) and the reporting provisions specified in §63.11985(a)(1), (b)(1), and (b)(10).

(4) Pressure vessel closure devices must not discharge to the atmosphere. Any such release (e.g., leak) constitutes a violation of this rule. You must submit to the Administrator as part of your compliance report the information specified in §63.11985(b)(10). This report is required even if you elect to follow the procedures specified in §63.11895 to establish an affirmative defense.

### §63.11915 What are my compliance requirements for equipment leaks?

For equipment in HAP service (as defined in §63.12005), you must comply with the requirements in paragraphs (a) through (c) of this section.

(a) Requirement for certain equipment in subpart UU of this part. You must comply with §§63.1020 through 63.1025, 63.1027, 63.1029 through 63.1032, and 63.1034 through 63.1039 of subpart UU of this part.

(b) Requirements for pumps, compressors, and agitators. You must meet the requirements of paragraphs (b)(1) and (2) of this section. For each type of equipment specified in paragraphs (b)(1) and (2) of this section, you must also meet the requirements of paragraph (a) of this section.

(1) Rotating pumps. HAP emissions from seals on all rotating pumps in HAP service are to be minimized by either installing sealless pumps, pumps with double mechanical seals or equivalent equipment, or by complying with the requirements of 40 CFR part 63, subpart UU for rotating pumps. If double mechanical seals are used, emissions from the seals are to be minimized by maintaining the pressure between the two seals so that any leak that occurs is into the pump; by complying with §63.11925(a) and (b); or equivalent equipment or procedures approved by the Administrator.

(2) Reciprocating pumps, rotating compressors, reciprocating compressors and agitators. HAP emissions from seals on all reciprocating pumps, rotating compressors, reciprocating compressors and agitators in HAP service are to be minimized by either installing double mechanical seals or equivalent equipment, or by complying with the requirements of 40 CFR part 63, subpart UU for reciprocating pumps, rotating compressors, reciprocating compressors and/or agitators. If double mechanical seals are used, HAP emissions from the seals are to be minimized by maintaining the pressure between the two seals so that any leak that occurs is into the pump; by complying with §63.11925(a) and (b); or equivalent equipment or procedures approved by the Administrator.

(c) Requirements for pressure relief devices. For pressure relief devices in HAP service, as defined in §63.12005, you must meet the requirements of this paragraph (c) and paragraph (a) of this section, you must comply with the recordkeeping provisions in §63.11990(c), and you must comply with the reporting provisions in §§63.11985(a)(2), (b)(2) and (c)(7).

(1) For pressure relief devices in HAP service that discharge directly to the atmosphere without first meeting the process vent emission limits in Table 1 or 2 to this subpart by routing the discharge to a closed vent system and control device designed and operated in accordance with the requirements in §§63.11925 through 63.11950, you must install, maintain, and operate release indicators as specified in paragraphs

(c)(1)(i) and (ii) of this section. Any release to the atmosphere without meeting the process vent emission limits in Table 1 or 2 to this subpart, constitutes a violation of this rule. You must submit the report specified in § 63.11985(c)(7), as described in paragraph (c)(1)(iii) of this section.

(i) A release indicator must be properly installed on each pressure relief device in such a way that it will indicate when an emission release has occurred.

(ii) Each indicator must be equipped with an alert system that will notify an operator immediately and automatically when the pressure relief device is open. The alert must be located such that the signal is detected and recognized easily by an operator.

(iii) For any instance that the release indicator indicates that a pressure relief device is open, you must notify operators that a pressure release has occurred, and, within 10 days of the release, you must submit to the Administrator the report specified in § 63.11985(c)(7). This report is required even if you elect to follow the procedures specified in § 63.11895 to establish an affirmative defense.

(2) For pressure relief devices in HAP service that discharge directly to a closed vent system and control device designed and operated in accordance with the requirements in §§ 63.11925 through 63.11950, and are required to meet process vent emission limits in Table 1 or 2 to this subpart. Any release to the atmosphere without meeting the process vent emission limits in Table 1 or 2 to this subpart, constitutes a violation of this rule. You must notify operators that a pressure release has occurred, and, within 10 days of the release, you must submit to the Administrator the report specified in § 63.11985(c)(7). This report is required even if you elect to follow the procedures specified in § 63.11895(b) to establish an affirmative defense.

### § 63.11920 What are my initial and continuous compliance requirements for heat exchange systems?

(a) Except as provided in paragraph (b) of this section, you must perform monitoring to identify leaks of volatile organic compounds from each heat exchange system in HAP service subject to the requirements of this subpart according to the procedures in paragraphs (a)(1) through (4) of this section.

(1) *Monitoring locations for closed-loop recirculation heat exchange systems.* For each closed loop recirculating heat exchange system, you must collect and analyze a sample from the location(s) described in either paragraph (a)(1)(i) or (ii) of this section.

(i) Each cooling tower return line prior to exposure to air for each heat exchange system in HAP service.

(ii) Selected heat exchanger exit line(s) so that each heat exchanger or group of heat exchangers within a heat exchange system is covered by the selected monitoring location(s).

(2) *Monitoring locations for once-through heat exchange systems.* For each once-through heat exchange system, you must collect and analyze a sample from the location(s) described in paragraph (a)(2)(i) of this section. You may also elect to collect and analyze an additional sample from the location(s) described in paragraph (a)(2)(ii) of this section.

(i) Selected heat exchanger exit line(s) so that each heat exchanger or group of heat exchangers in HAP service within a heat exchange system is covered by the selected monitoring location(s).

(ii) The inlet water feed line for a once-through heat exchange system prior to any heat exchanger. If multiple heat exchange systems use the same water feed (i.e., inlet water from the same primary water source), you may monitor at one representative location and use the monitoring results for that sampling location for all heat exchange systems that use that same water feed.

(3) *Monitoring method.* You must determine the total strippable volatile organic compounds concentration or vinyl chloride concentration at each monitoring location using one of the analytical methods specified in paragraphs (a)(3)(i) through (iii) of this section.

(i) Determine the total strippable volatile organic compounds concentration (in parts per million by volume) as methane from the air stripping testing system using Modified El Paso Method

(incorporated by reference, see §63.14) using a flame ionization detector analyzer.

(ii) Determine the total strippable volatile organic compounds concentration (in parts per billion by weight) in the cooling water using Method 624 at 40 CFR part 136, appendix A. The target list of compounds shall be generated based on a pre-survey sample and analysis by gas chromatography/mass spectrometry and process knowledge to include all compounds that can potentially leak into the cooling water. If Method 624 of part 136, appendix A is not applicable for all compounds that can potentially leak into the cooling water for a given heat exchange system, you cannot use this monitoring method for that heat exchange system.

(iii) Determine the vinyl chloride concentration (in parts per billion by weight) in the cooling water using Method 107 at 40 CFR part 61, appendix A.

(4) *Monitoring frequency*. You must determine the total strippable volatile organic compounds or vinyl chloride concentration at each monitoring location at the frequencies specified in paragraphs (a)(4)(i) and (ii) of this section.

(i) For heat exchange systems for which you have not delayed repair of any leaks, monitor at least monthly. You may elect to monitor more frequently than the minimum frequency specified in this paragraph.

(ii) If you elect to monitor the inlet water feed line for a once-through heat exchange system as provided in paragraph (a)(2)(ii) of this section, you must monitor the inlet water feed line at the same frequency used to monitor the heat exchange exit line(s), as required in paragraph (a)(2)(i) of this section.

(b) A heat exchange system is not subject to the monitoring requirements in paragraph (a) of this section if it meets any one of the criteria in paragraphs (b)(1) through (3) of this section.

(1) All heat exchangers that are in HAP service within the heat exchange system operate with the minimum pressure on the cooling water side at least 35 kilopascals greater than the maximum pressure on the process side.

(2) The heat exchange system does not contain any heat exchangers that are in HAP service.

(3) The heat exchange system has a maximum cooling water flow rate of 10 gallons per minute or less.

(c) The leak action levels for both existing and new sources are specified in paragraphs (c)(1) through (3) of this section.

(1) If you elect to monitor your heat exchange system by using the monitoring method specified in paragraph (a)(3)(i) of this section, then the leak action level is a total strippable volatile organic compounds concentration (as methane) in the stripping gas of 3.9 parts per million by volume.

(2) If you elect to monitor your heat exchange system by using the monitoring method specified in paragraph (a)(3)(ii) of this section, then the leak action level is a total strippable volatile organic compounds concentration in the cooling water of 50 parts per billion by weight.

(3) If you elect to monitor your heat exchange system by using the monitoring method specified in paragraph (a)(3)(iii) of this section, then the leak action level is a vinyl chloride concentration in the cooling water of 50 parts per billion by weight.

(d) A leak is defined as specified in paragraph (d)(1) or (2) of this section, as applicable.

(1) For once-through heat exchange systems for which you monitor the inlet water feed, as described in paragraph (a)(2)(ii) of this section, a leak is detected if the difference in the measurement value of the sample taken from a location specified in paragraph (a)(2)(i) of this section and the measurement value of the corresponding sample taken from the location specified in paragraph (a)(2)(ii) of this section equals or exceeds the leak action level.

(2) For all other heat exchange systems, a leak is detected if a measurement value taken according to the requirements in paragraph (a) of this section equals or exceeds the leak action level.

(e) If a leak is detected, you must repair the leak to reduce the measured concentration to below the applicable action level as soon as practicable, but

no later than 45 days after identifying the leak, except as specified in paragraphs (f) and (g) of this section. Repair includes re-monitoring as specified in paragraph (a) of this section to verify that the measured concentration is below the applicable action level. Actions that you can take to achieve repair include but are not limited to:

(1) Physical modifications to the leaking heat exchanger, such as welding the leak or replacing a tube;

(2) Blocking the leaking tube within the heat exchanger;

(3) Changing the pressure so that water flows into the process fluid;

(4) Replacing the heat exchanger or heat exchanger bundle; or

(5) Isolating, bypassing or otherwise removing the leaking heat exchanger from service until it is otherwise repaired.

(f) If you detect a leak when monitoring a cooling tower return line or heat exchanger exit line under paragraph (a) of this section, you may conduct additional monitoring following the requirements in paragraph (a) of this section to further isolate each heat exchanger or group of heat exchangers in HAP service within the heat exchange system for which the leak was detected. If you do not detect any leaks when conducting additional monitoring for each heat exchanger or group of heat exchangers, the heat exchange system is excluded from repair requirements in paragraph (e) of this section.

(g) The delay of repair action level is defined as either a total strippable volatile organic compounds concentration (as methane) in the stripping gas of 39 parts per million by volume or a total strippable volatile organic compounds concentration in the cooling water of 500 parts per billion by weight or a vinyl chloride concentration in the cooling water of 500 parts per billion by weight. While you remain below the repair action level, you may delay the repair of a leaking heat exchanger only if one of the conditions in paragraphs (g)(1) or (2) of this section is met. If you exceed the repair action level you must repair according to paragraph (e) of this section. You must determine if a delay of repair is necessary as soon as practicable, but no later than 45 days after first identifying the leak.

(1) If the repair is technically infeasible without a shutdown and the total strippable volatile organic compounds or vinyl chloride concentration is initially and remains less than the delay of repair action level for all monitoring periods during the delay of repair, you may delay repair until the next scheduled shutdown of the heat exchange system. If, during subsequent monitoring, the total strippable volatile organic compounds or vinyl chloride concentration is equal to or greater than the delay of repair action level, you must repair the leak within 30 days of the monitoring event in which the total strippable volatile organic compounds or vinyl chloride concentration was equal to or exceeded the delay of repair action level.

(2) If the necessary equipment, parts, or personnel are not available and the total strippable volatile organic compounds or vinyl chloride concentration is initially and remains less than the delay of repair action level for all monitoring periods during the delay of repair, you may delay the repair for a maximum of 120 days from the day the leak was first identified. You must demonstrate that the necessary equipment, parts or personnel were not available. If, during subsequent monthly monitoring, the total strippable volatile organic compounds or vinyl chloride concentration is equal to or greater than the delay of repair action level, you must repair the leak within 30 days of the monitoring event in which the leak was equal to or exceeded the total strippable volatile organic compounds or vinyl chloride delay of repair action level.

(h) To delay the repair under paragraph (g) of this section, you must record the information in paragraphs (h)(1) through (4) of this section.

(1) The reason(s) for delaying repair.

(2) A schedule for completing the repair as soon as practical.

(3) The date and concentration of the leak as first identified and the results of all subsequent monitoring events during the delay of repair.

(4) An estimate of the potential emissions from the leaking heat exchange system following the procedures in

paragraphs (h)(4)(i) and (ii) of this section.

(i) Determine the total strippable volatile organic compounds or vinyl chloride concentration in the cooling water, in parts per billion by weight. If the Modified El Paso Method is used, calculate the total strippable volatile organic compounds concentration in the cooling water using equation 7–1 from Modified El Paso Method (incorporated by reference, see §63.14) and the total strippable volatile organic compounds concentration measured in the stripped air.

(ii) Calculate the emissions for the leaking heat exchange system by multiplying the volatile organic compounds or vinyl chloride concentration in the cooling water, ppbw, by the flow rate of the cooling water at the selected monitoring location and by the expected duration of the delay according to Equation 1 of this section. The flow rate may be based on direct measurement, pump curves, heat balance calculations or other engineering methods.

$$E_L = (C_{VC})(10^{-9})(V_{CW})(\rho_{CW})(60)(D_{delay}) \qquad \text{(Eq. 1)}$$

*Where:*

$E_L$ = Emissions from leaking heat exchange system, pounds of volatile organic compounds or vinyl chloride.

$C_{VC}$ = Actual measured concentration of total strippable volatile organic compounds or vinyl chloride measured in the cooling water, parts per billion by weight (ppbw).

$V_{CW}$ = Total volumetric flow rate of cooling water, gallons per minute (gpm).

$\rho_{CW}$ = Density of cooling water, pounds per gallon (lb/gal).

$D_{delay}$ = Expected duration of the repair delay, days.

### §63.11925 What are my initial and continuous compliance requirements for process vents?

Each process vent must meet the requirements of paragraphs (a) through (h) of this section.

(a) *Emission limits.* Each process vent must meet the emission limits in Table 1 or 2 to this subpart prior to the vent stream being exposed to the atmosphere. The emission limits in Table 1 or 2 to this subpart apply at all times. The emission limits in Table 1 or 2 to this subpart must not be met through dilution.

(b) *Closed vent systems and control devices.* Each batch process vent, continuous process vent and miscellaneous vent that is in HAP service must be routed through a closed vent system to a control device. All gas streams routed to the closed vent system and control device must be for a process purpose and not for the purpose of diluting the process vent to meet the emission limits in Table 1 or 2 to this subpart. Each control device used to comply with paragraph (a) of this section must meet the requirements of §§63.11925 and 63.11940, and all closed vent systems must meet the requirements in §63.11930. You must not use a flare to comply with the emission limits in Table 1 or 2 to this subpart.

(c) *General monitoring requirements.* Except as provided in paragraphs (c)(1) through (3) of this section, for each control device used to comply with the process vent emission limit specified in Table 1 or 2 to this subpart, you must install and operate a continuous parameter monitoring system (CPMS) to monitor each operating parameter specified in §63.11940(a) through (h) to comply with your operating limit(s) required in §63.11880(b).

(1) Hydrogen chloride continuous emission monitoring system (CEMS). In lieu of establishing operating limits in §63.11880(b) and using CPMS to comply with the operating limits, as specified in §63.11940(a) through (h), upon promulgation of a performance specification for hydrogen chloride CEMS, new and existing sources have the option to install a hydrogen chloride CEMS to demonstrate initial and continuous compliance with the hydrogen chloride emission limit for process vents, as specified in paragraphs (d) and (e) of this section.

(2) Dioxin/furan CEMS. In lieu of establishing operating limits in § 63.11880(b) and using CPMS to comply with the operating limits as specified in § 63.11940(a) through (h), upon promulgation of a performance specification for dioxin/furan CEMS, new and existing sources have the option to install a dioxin/furan CEMS to demonstrate initial and continuous compliance with the dioxins/furan emission limit for process vents, as specified in paragraphs (d) and (e) of this section.

(3) Total hydrocarbon CEMS. In lieu of establishing operating limits in § 63.11880(b) and using CPMS to comply with the operating limits as specified in § 63.11940(a) through (h), new and existing affected sources have the option to install a total hydrocarbon CEMS to demonstrate initial and continuous compliance with the total hydrocarbons or total organic HAP emission limit for process vents, as specified in paragraphs (d) and (e) of this section.

(d) *Initial compliance.* To demonstrate initial compliance with the emission limits in Table 1 or 2 to this subpart, you must comply with paragraphs (d)(1) through (5) of this section.

(1) You must conduct an initial inspection as specified in § 63.11930(d) for each closed vent system.

(2) For each CEMS and CPMS required or that you elect to use as specified in paragraph (c) of this section, you must prepare the quality control program and site-specific performance evaluation test plan as specified in § 63.11935(b) and site-specific monitoring plan specified in § 63.11935(c), respectively.

(3) For each CEMS and CPMS required or that you elect to use as specified in paragraph (c) of this section, you must install, operate, and maintain the CEMS and CPMS as specified in §§ 63.11935(b) and (c), respectively, and you must conduct an initial site-specific performance evaluation test according to your site-specific monitoring plan and §§ 63.11935(b)(3) and (c)(4), respectively.

(4) For each emission limit for which you use a CEMS to demonstrate compliance, you must meet the requirements specified in § 63.11890(c), and you must demonstrate initial compliance with the emission limits in Table 1 or 2 to this subpart based on 3-hour block averages of CEMS data collected at the minimum frequency specified in § 63.11935(b)(2) and calculated using the data reduction method specified in § 63.11935(e). For a CEMS used on a batch operation, you may use a data averaging period based on an operating block in lieu of the 3-hour averaging period.

(5) For each emission limit in Table 1 or 2 for which you do not use a CEMS to demonstrate compliance, you must meet the requirements of paragraphs (d)(5)(i) and (ii) of this section.

(i) You must conduct an initial performance test according to the requirements in § 63.11945 to demonstrate compliance with the total hydrocarbons or total organic HAP emission limit, vinyl chloride emission limit, hydrogen chloride emission limit, and dioxin/furan emission limit in Table 1 or 2 to this subpart.

(ii) During the performance test specified in paragraph (d)(5)(i) of this section, for each CPMS installed and operated as specified in paragraph (c) of this section, you must establish an operating limit as the operating parameter range, minimum operating parameter level, or maximum operating parameter level specified in § 63.11935(d). You must meet the requirements specified in § 63.11890(c). Each operating limit must be based on the data averaging period for compliance specified in Table 5 to this subpart using data collected at the minimum frequency specified in § 63.11935(c)(2) and calculated using the data reduction method specified in § 63.11935(e). For a CPMS used on a batch operation, you may use a data averaging period based on an operating block in lieu of the averaging period specified in Table 5 to this subpart.

(e) *Continuous compliance.* To demonstrate continuous compliance with the emission limits in Table 1 or 2 to this subpart for each process vent, you must comply with paragraphs (e)(1) through (5) of this section.

(1) You must meet the requirements in § 63.11930 for each closed vent system.

(2) You must operate and maintain each CEMS and CPMS required in paragraph (c) of this section as specified in §63.11935(b) and (c), respectively.

(3) For each emission limit for which you use a CEMS to demonstrate compliance, you must meet the requirements in paragraphs (e)(3)(i) and (ii) of this section.

(i) You must conduct a periodic site-specific CEMS performance evaluation test according to your quality control program and site-specific performance evaluation test plan specified in §63.11935(b)(1).

(ii) You must demonstrate continuous compliance with the emission limits in Table 1 or 2 to this subpart based on 3-hour block averages of CEMS data collected at the minimum frequency specified in §63.11935(b)(2), and calculated using the data reduction method specified in §63.11935(e). You must meet the requirements specified in §63.11890(c). For a CEMS used on a batch operation, you may use a data averaging period based on an operating block in lieu of the 3-hour averaging period.

(4) For each emission limit for which you do not use a CEMS to demonstrate compliance, you must meet the requirements of paragraphs (e)(4)(i) and (ii) of this section.

(i) You must conduct a performance test once every 5 years according to the requirements in §63.11945 for each pollutant in Table 1 or 2 to this subpart.

(ii) For each CPMS operated and maintained as specified in paragraph (e)(2) of this section, you must meet the requirements specified in paragraphs (e)(4)(ii)(A) through (C) of this section.

(A) You must conduct periodic site-specific CPMS performance evaluation tests according to your site-specific monitoring plan and §63.11935(c).

(B) For each control device being monitored, you must continuously collect CPMS data consistent with §63.11890(c) and your site-specific monitoring plan. You must continuously determine the average value of each monitored operating parameter based on the data collection and reduction methods specified in §§63.11935(c)(2) and 63.11935(e), and the applicable data averaging period for compliance specified in Table 5 to this subpart for all periods the process is operating. For a CPMS used on a batch operation, you may use a data averaging period based on an operating block in lieu of the averaging periods specified in Table 5 to this subpart.

(C) You must demonstrate continuous compliance with each operating limit established in paragraph (d)(5)(ii) of this section using these average values calculated in paragraph (e)(4)(ii)(B) of this section.

(5) Each closed vent system and control device used to comply with an emission limit in Table 1 or 2 to this subpart must be operated at all times when emissions are vented to, or collected by, these systems or devices.

(f) To demonstrate compliance with the dioxin/furan toxic equivalency emission limit specified in Table 1 or 2 to this subpart, you must determine dioxin/furan toxic equivalency as specified in paragraphs (f)(1) through (3) of this section.

(1) Measure the concentration of each dioxin/furan (tetra-through octachlorinated) congener emitted using Method 23 at 40 CFR part 60, appendix A–7.

(2) For each dioxin/furan (tetra-through octachlorinated) congener measured in accordance with paragraph (f)(1) of this section, multiply the congener concentration by its corresponding toxic equivalency factor specified in Table 6 to this subpart.

(3) Sum the products calculated in accordance with paragraph (f)(2) of this section to obtain the total concentration of dioxins/furans emitted in terms of toxic equivalency.

(g) *Emission profile.* You must characterize each process vent by developing an emissions profile for each contributing continuous process vent, miscellaneous vent and batch process vent according to paragraphs (g)(1) through (3) of this section.

(1) For batch process vents, the emissions profile must:

(i) Describe the characteristics of the batch process vent under worst-case conditions.

(ii) Determine emissions per episode and batch process vent emissions according to the procedures specified in § 63.11950.

(2) For continuous process vents, the flow rate and concentration must be determined according to paragraphs (g)(2)(i) through (iii) or according to paragraph (g)(2)(iv):

(i)(A) Method 1 or 1A of 40 CFR part 60, appendix A–1, as appropriate, shall be used for selection of the sampling site. The sampling site shall be after the last recovery device (if any recovery devices are present) but prior to being combined with any other continuous process vent, batch process vent, or miscellaneous vent, prior to the inlet of any control device that is present and prior to release to the atmosphere.

(B) No traverse site selection method is needed for vents smaller than 0.10 meter in diameter.

(ii) The gas volumetric flow rate shall be determined using Method 2, 2A, 2C or 2D of 40 CFR part 60, appendix A–1, as appropriate.

(iii) (A) Method 18 of 40 CFR part 60, appendix A–6 or Method 25A of 40 CFR part 60, appendix A–7 shall be used to measure concentration; alternatively, any other method or data that has been validated according to the protocol in Method 301 of appendix A of this part may be used.

(B) Where Method 18 of 40 CFR part 60, appendix A–6 is used, the following procedures shall be used to calculate parts per million by volume concentration:

(*1*) The minimum sampling time for each run shall be 1 hour in which either an integrated sample or four grab samples shall be taken. If grab sampling is used, then the samples shall be taken at approximately equal intervals in time, such as 15-minute intervals during the run.

(*2*) The concentration of either total organic compounds (TOC) (minus methane and ethane) or organic HAP shall be calculated according to paragraph (g)(2)(iii)(B)(2)(i) or (g)(2)(iii)(B)(2)(ii) of this section as applicable.

(*i*) The TOC concentration ($C_{TOC}$) is the sum of the concentrations of the individual components and shall be computed for each run using Equation 1 of this section:

$$C_{TOC} = \frac{\sum_{i=1}^{x}\left(\sum_{j=1}^{n} C_{ji}\right)}{X} \qquad \text{(Eq. 1)}$$

*Where:*

$C_{TOC}$ = Concentration of TOC (minus methane and ethane), dry basis, parts per million by volume.

$C_{ji}$ = Concentration of sample component j of the sample i, dry basis, parts per million by volume.

n = Number of components in the sample.

x = Number of samples in the sample run.

(*ii*) The total organic HAP concentration (CHAP) shall be computed according to Equation 1 of this section except that only the organic HAP species shall be summed. The list of organic HAP is provided in Table 2 to subpart F of this part.

(C) Where Method 25A of 40 CFR part 60, appendix A–7 is used, the following procedures shall be used to calculate parts per million by volume TOC concentration:

(*1*) Method 25A of 40 CFR part 60, appendix A–7, shall be used only if a single organic HAP compound is greater than 50 percent of total organic HAP, by volume, in the vent stream.

(*2*) The vent stream composition may be determined by either process knowledge, test data collected using an appropriate EPA method, or a method or data validated according to the protocol in Method 301 of appendix A of this part. Examples of information

that could constitute process knowledge include calculations based on material balances, process stoichiometry, or previous test results provided the results are still relevant to the current vent stream conditions.

(*3*) The organic HAP used as the calibration gas for Method 25A of 40 CFR part 60, appendix A–7 shall be the single organic HAP compound present at greater than 50 percent of the total organic HAP by volume.

(*4*) The span value for Method 25A of 40 CFR part 60, appendix A–7 shall be 50 parts per million by volume.

(*5*) Use of Method 25A of 40 CFR part 60, appendix A–7 is acceptable if the response from the high-level calibration gas is at least 20 times the standard deviation of the response from the zero calibration gas when the instrument is zeroed on the most sensitive scale.

(iv) Engineering assessment including, but not limited to, the following:

(A) Previous test results provided the tests are representative of current operating practices at the process unit.

(B) Bench-scale or pilot-scale test data representative of the process under representative operating conditions.

(C) Maximum flow rate, TOC emission rate, organic HAP emission rate, or net heating value limit specified or implied within a permit limit applicable to the process vent.

(D) Design analysis based on accepted chemical engineering principles, measurable process parameters, or physical or chemical laws or properties. Examples of analytical methods include, but are not limited to:

(*1*) Use of material balances based on process stoichiometry to estimate maximum organic HAP concentrations,

(*2*) Estimation of maximum flow rate based on physical equipment design such as pump or blower capacities,

(*3*) Estimation of TOC or organic HAP concentrations based on saturation conditions,

(*4*) Estimation of maximum expected net heating value based on the vent stream concentration of each organic compound or, alternatively, as if all TOC in the vent stream were the compound with the highest heating value.

(E) All data, assumptions, and procedures used in the engineering assessment shall be documented.

(3) For miscellaneous process vents the emissions profile must be determined according to paragraph (g)(2)(iv) of this section.

(h) *Process changes*. Except for temporary shutdowns for maintenance activities, if you make a process change such that, as a result of that change, you are subject to a different process vent limit in Table 1 or 2 to this subpart, then you must meet the requirements of §63.11896.

### §63.11930 What requirements must I meet for closed vent systems?

(a) *General*. To route emissions from process vents subject to the emission limits in Table 1 or 2 to this subpart to a control device, you must use a closed vent system and meet the requirements of this section and all provisions referenced in this section. However, if you operate and maintain your closed vent system in vacuum service as defined in §63.12005, you must meet the requirements in paragraph (h) of this section and are not required to meet the requirements in paragraphs (a) through (g) of this section.

(b) *Collection of emissions*. Each closed vent system must be designed and operated to collect the HAP vapors from each continuous process vent, miscellaneous process vent and batch process vent, and to route the collected vapors to a control device.

(c) *Bypass*. For each closed vent system that contains a bypass as defined in §63.12005 (*e.g.*, diverting a vent stream away from the control device), you must not discharge to the atmosphere through the bypass. Any such release constitutes a violation of this rule. The use of any bypass diverted to the atmosphere during a performance test invalidates the performance test. You must comply with the provisions of either paragraph (c)(1) or (2) of this section for each closed vent system that contains a bypass that could divert a vent stream to the atmosphere.

(1) *Bypass flow indicator*. Install, maintain, and operate a flow indicator as specified in paragraphs (c)(1)(i) through (iv) of this section.

(i) The flow indicator must be properly installed at the entrance to any bypass.

(ii) The flow indicator must be equipped with an alarm system that will alert an operator immediately, and automatically when flow is detected in the bypass. The alarm must be located such that the alert is detected and recognized easily by an operator.

(iii) If the alarm is triggered, you must immediately initiate procedures to identify the cause of the alarm. If any closed vent system has discharged to the atmosphere through a vent or bypass, you must initiate procedures to stop the bypass discharge.

(iv) For any instances where the flow indicator alarm is triggered, you must submit to the Administrator as part of your compliance report, the information specified in § 63.11985(b)(9) and (10). This report is required even if you elect to follow the procedures specified in § 63.11895 to establish an affirmative defense and submit the reports specified in § 63.11985(b)(11).

(2) *Bypass valve configuration.* Secure the bypass valve in the non-diverting position with a car-seal or a lock-and-key type configuration.

(i) You must visually inspect the seal or closure mechanism at least once every month to verify that the valve is maintained in the non-diverting position, and the vent stream is not diverted through the bypass. A broken seal or closure mechanism or a diverted valve constitutes a violation from the emission limits in Table 1 or 2 to this subpart. You must maintain the records specified in paragraph (g)(1)(ii) of this section.

(ii) For each seal or closure mechanism, you must comply with either paragraph (c)(2)(ii)(A) or (B) of this section.

(A) For each instance that you change the bypass valve to the diverting position, you must submit to the Administrator as part of your compliance report, the information specified in § 63.11985(b)(9) and (10). This report is required even if you elect to follow the procedures specified in § 63.11895 to establish an affirmative defense and submit the reports specified in § 63.11985(b)(11).

(B) You must install, maintain, and operate a bypass flow indicator as specified in paragraphs (c)(1)(i) and (ii) of this section and you must meet the requirements in paragraph (c)(1)(iii) and (iv) of this section for each instance that the flow indicator alarm is triggered.

(d) *Closed vent system inspection and monitoring requirements.* Except as provided in paragraph (d)(3) of this section, you must inspect each closed vent system as specified in paragraph (d)(1) or (2) of this section.

(1) *Hard-piping inspection.* If the closed vent system is constructed of hard-piping, you must comply with the requirements specified in paragraphs (d)(1)(i) and (ii) of this section.

(i) Conduct an initial inspection according to the procedures in paragraph (e) of this section.

(ii) Conduct annual inspections for visible, audible, or olfactory indications of leaks.

(2) *Ductwork inspection.* If the closed vent system is constructed of ductwork, you must conduct initial and annual inspections according to the procedures in paragraph (e) of this section.

(3) *Equipment that is unsafe to inspect.* You may designate any parts of the closed vent system as unsafe to inspect if you determine that personnel would be exposed to an immediate danger as a consequence of complying with the initial and annual closed vent system inspection requirements of this subpart.

(e) *Closed vent system inspection procedures.* Except as provided in paragraph (e)(4) of this section, you must comply with all provisions of paragraphs (e)(1) through (3) of this section.

(1) *General.* Inspections must be performed during periods when HAP is being collected by or vented through the closed vent system. A leak is indicated by an instrument reading greater than 500 parts per million by volume above background or by visual inspection.

(2) *Inspection procedures.* Each closed vent system subject to this paragraph (e)(2) must be inspected according to the procedures specified in paragraphs (e)(2)(i) through (vii) of this section.

(i) Inspections must be conducted in accordance with Method 21 at 40 CFR

part 60, appendix A–7, except as otherwise specified in this section.

(ii) Except as provided in paragraph (e)(2)(iii) of this section, the detection instrument must meet the performance criteria of Method 21 at 40 CFR part 60, appendix A–7, except the instrument response factor criteria in section 8.1.1.2 of Method 21 must be for the representative composition of the process fluid and not of each individual volatile organic compound in the stream. For process streams that contain nitrogen, air, water or other inerts that are not organic HAP or volatile organic compound, the representative stream response factor must be determined on an inert-free basis. You may determine the response factor at any concentration for which you will monitor for leaks.

(iii) If no instrument is available at the plant site that will meet the performance criteria of Method 21 at 40 CFR part 60, appendix A–7 specified in paragraph (e)(2)(ii) of this section, the instrument readings may be adjusted by multiplying by the representative response factor of the process fluid, calculated on an inert-free basis as described in paragraph (e)(2)(ii) of this section.

(iv) The detection instrument must be calibrated before use on each day of its use by the procedures specified in Method 21 at 40 CFR part 60, appendix A–7.

(v) Calibration gases must be as specified in paragraphs (e)(2)(v)(A) through (D) of this section.

(A) Zero air (less than 10 parts per million by volume hydrocarbon in air).

(B) Mixtures of methane in air at a concentration less than 10,000 parts per million by volume. A calibration gas other than methane in air may be used if the instrument does not respond to methane or if the instrument does not meet the performance criteria specified in paragraph (e)(2)(ii) of this section. In such cases, the calibration gas may be a mixture of one or more of the compounds to be measured in air.

(C) If the detection instrument's design allows for multiple calibration scales, then the lower scale must be calibrated with a calibration gas that is no higher than 2,500 parts per million by volume.

(D) Perform a calibration drift assessment, at a minimum, at the end of each monitoring day. Check the instrument using the same calibration gas(es) that were used to calibrate the instrument before use. Follow the procedures specified in Method 21 at 40 CFR part 60, appendix A–7, section 10.1, except do not adjust the meter readout to correspond to the calibration gas value. Record the instrument reading for each scale used as specified in paragraph (g)(4) of this section. Divide these readings by the initial calibration values for each scale and multiply by 100 to express the calibration drift as a percentage. If any calibration drift assessment shows a negative drift of more than 10 percent from the initial calibration value, then all equipment monitored since the last calibration with instrument readings below the appropriate leak definition and above the leak definition multiplied by the value specified in paragraph (e)(2)(v)(D)(*1*) of this section must be re-monitored. If any calibration drift assessment shows a positive drift of more than 10 percent from the initial calibration value, then, at your discretion, all equipment since the last calibration with instrument readings above the appropriate leak definition and below the leak definition multiplied by the value specified in paragraph (e)(2)(v)(D)(*2*) of this section may be re-monitored.

(*1*) 100 minus the percent of negative drift, divided by 100.

(*2*) 100 plus the percent of positive drift, divided by 100.

(vi) You may elect to adjust or not adjust instrument readings for background. If you elect not to adjust readings for background, all such instrument readings must be compared directly to 500 parts per million by volume to determine whether there is a leak. If you elect to adjust instrument readings for background, you must measure background concentration using the procedures in this section. You must subtract the background reading from the maximum concentration indicated by the instrument.

(vii) If you elect to adjust for background, the arithmetic difference between the maximum concentration indicated by the instrument and the background level must be compared

with 500 parts per million by volume for determining whether there is a leak.

(3) *Instrument probe.* The instrument probe must be traversed around all potential leak interfaces as described in Method 21 at 40 CFR part 60, appendix A–7.

(4) *Unsafe-to-inspect written plan requirements.* For equipment designated as unsafe to inspect according to the provisions of paragraph (d)(3) of this section, you must maintain and follow a written plan that requires inspecting the equipment as frequently as practical during safe-to-inspect times, but not more frequently than the annual inspection schedule otherwise applicable. You must still repair unsafe-to-inspect equipment according to the procedures in paragraph (f) of this section if a leak is detected.

(f) *Closed vent system leak repair provisions.* The provisions of this paragraph (f) apply to closed vent systems collecting HAP from an affected source.

(1) *Leak repair general for hard-piping.* If there are visible, audible, or olfactory indications of leaks at the time of the annual visual inspections required by paragraph (d)(1)(ii) of this section, you must follow the procedure specified in either paragraph (f)(1)(i) or (ii) of this section.

(i) You must eliminate the leak.

(ii) You must monitor the equipment according to the procedures in paragraph (e) of this section and comply with the leak repair provisions in paragraph (f)(2) of this section.

(2) *Leak repair schedule.* Leaks must be repaired as soon as practical, except as provided in paragraph (f)(3) of this section.

(i) A first attempt at repair must be made no later than 5 days after the leak is detected.

(ii) Except as provided in paragraph (f)(3) of this section, repairs must be completed no later than 15 days after the leak is detected or at the beginning of the next introduction of vapors to the system, whichever is later.

(3) *Delay of repair.* Delay of repair of a closed vent system for which leaks have been detected is allowed if repair within 15 days after a leak is detected is technically infeasible or unsafe without a closed vent system shutdown or if you determine that emissions resulting from immediate repair would be greater than the emissions likely to result from delay of repair. Repair of such equipment must be completed as soon as practical, but not later than the end of the next closed vent system shutdown.

(g) *Closed vent system records.* For closed vent systems, you must record the information specified in paragraphs (g)(1) through (5) of this section, as applicable.

(1) *Bypass records.* For each closed vent system that contains a bypass that could divert a vent stream away from the control device and to the atmosphere, or cause air intrusion into the control device, you must keep a record of the information specified in either paragraph (g)(1)(i) or (ii) of this section, as applicable.

(i) You must maintain records of any alarms triggered because flow was detected in the bypass, including the date and time the alarm was triggered, the duration of the flow in the bypass, as well as records of the times of all periods when the vent stream is diverted from the control device or the flow indicator is not operating.

(ii) Where a seal mechanism is used to comply with paragraph (c)(2) of this section, hourly records of flow are not required. In such cases, you must record that the monthly visual inspection of the seals or closure mechanisms has been done, and must record the occurrence of all periods when the seal mechanism is broken, the bypass valve position has changed, or the key for a lock-and-key type lock has been checked out, and records of any car-seal that has been broken.

(2) *Inspection records.* For each instrumental or visual inspection conducted in accordance with paragraph (d)(1) or (2) of this section for closed vent systems collecting HAP from an affected source during which no leaks are detected, you must record that the inspection was performed, the date of the inspection, and a statement that no leaks were detected.

(3) *Leak records.* When a leak is detected from a closed vent system collecting HAP from an affected source, the information specified in paragraphs

(g)(3)(i) through (vi) of this section must be recorded and kept for 5 years.

(i) The instrument and the equipment identification number and the operator name, initials, or identification number.

(ii) The date the leak was detected and the date of the first attempt to repair the leak.

(iii) The date of successful repair of the leak.

(iv) The maximum instrument reading measured by the procedures in paragraph (e) of this section after the leak is successfully repaired.

(v) Repair delayed and the reason for the delay if a leak is not repaired within 15 days after discovery of the leak. You may develop a written procedure that identifies the conditions that justify a delay of repair. In such cases, reasons for delay of repair may be documented by citing the relevant sections of the written procedure.

(vi) Copies of the compliance reports as specified in §63.11985(b)(9), if records are not maintained on a computerized database capable of generating summary reports from the records.

(4) *Instrument calibration records.* You must maintain records of the information specified in paragraphs (g)(4)(i) through (vi) of this section for monitoring instrument calibrations conducted according to sections 8.1.2 and 10 of Method 21 at 40 CFR part 60, appendix A–7, and paragraph (e) of this section.

(i) Date of calibration and initials of operator performing the calibration.

(ii) Calibration gas cylinder identification, certification date, and certified concentration.

(iii) Instrument scale(s) used.

(iv) A description of any corrective action taken if the meter readout could not be adjusted to correspond to the calibration gas value in accordance with section 10.1 of Method 21 at 40 CFR part 60, appendix A–7.

(v) Results of each calibration drift assessment required by paragraph (e)(2)(v)(D) of this section (*i.e.*, instrument reading for calibration at end of the monitoring day and the calculated percent difference from the initial calibration value).

(vi) If you make your own calibration gas, a description of the procedure used.

(5) *Unsafe-to-inspect records.* If you designate equipment as unsafe-to-inspect as specified in paragraph (d)(3) of this section, you must keep the records specified in paragraph (g)(5)(i) and (ii) of this section.

(i) You must maintain the identity of unsafe-to-inspect equipment as specified in paragraph (d)(3) of this section.

(ii) You must keep a written plan for inspecting unsafe-to-inspect equipment as required by paragraph (e)(4) of this section and record all activities performed according to the written plan.

(h) *Closed vent systems in vacuum service.* If you operate and maintain a closed vent system in vacuum service as defined in §63.12005, you must comply with the requirements in paragraphs (h)(1) through (3) of this section, and you are not required to comply with any other provisions of this section. Any incidence where a closed vent system designed to be in vacuum service is operating and not in vacuum service constitutes a violation of this rule, unless the closed vent system is meeting the requirements in paragraphs (a) through (g) of this section for closed vent systems that are not in vacuum service. Any such incidence during a performance test invalidates the performance test.

(1) *In vacuum service alarm.* You must install, maintain, and operate a pressure gauge and alarm system that will alert an operator immediately and automatically when the pressure is such that the closed vent system no longer meets the definition of in vacuum service as defined in §63.12005. The alarm must be located such that the alert is detected and recognized easily by an operator.

(2) *In vacuum service alarm procedures.* If the alarm is triggered for a closed vent system operating in vacuum service as specified in paragraph (h)(1) of this section, you must immediately initiate procedures to identify the cause of the alarm. If the closed vent system is not in vacuum service, you must initiate procedures to get the closed vent system back in vacuum service as defined in §63.12005, or you

must immediately comply with the requirements in paragraphs (a) through (g) of this section for closed vent systems that are not in vacuum service.

(3) *In vacuum service alarm records and reports.* For any incidences where a closed vent system designed to be in vacuum service is not in vacuum service, you must submit to the Administrator as part of your compliance report, the information specified in § 63.11985(b)(10). This report is required even if you elect to follow the procedures specified in § 63.11895 to establish an affirmative defense and submit the reports specified in § 63.11985(b)(11).

### § 63.11935 What CEMS and CPMS requirements must I meet to demonstrate initial and continuous compliance with the emission standards for process vents?

(a) *General requirements for CEMS and CPMS.* You must meet the requirements in paragraph (b) of this section for each CEMS specified in § 63.11925(c) used to demonstrate compliance with the emission limits for process vents in Table 1 or 2 to this subpart. You must meet the CPMS requirements in paragraph (c) of this section and establish your operating limits in paragraph (d) of this section for each operating parameter specified in Table 5 to this subpart for each process vent control device specified in § 63.11925(b) that is used to comply with the emission limits for process vents in Table 1 or 2 to this subpart, except that flow indicators specified in § 63.11940(a) are not subject to the requirements of this section.

(b) *CEMS.* You must install, operate, and maintain each CEMS according to paragraphs (b)(1) through (7) of this section and continuously monitor emissions.

(1) You must prepare your quality control program and site-specific performance evaluation test plan, as specified in § 63.8(d) and (e). You must submit your performance evaluation test plan to the Administrator for approval, as specified in § 63.8(e)(3).

(2) The monitoring equipment must be capable of providing a continuous record, recording data at least once every 15 minutes.

(3) You must conduct initial and periodic site-specific performance evaluations and any required tests of each CEMS according to your quality control program and site-specific performance evaluation test plan prepared as specified in § 63.8(d) and (e).

(4) If supplemental gases are added to the control device, you must correct the measured concentrations in accordance with § 63.11945(d)(3).

(5) You must operate and maintain the CEMS in continuous operation according to the quality control program and performance evaluation test plan. CEMS must record data at least once every 15 minutes.

(6) CEMS must meet the minimum accuracy and calibration frequency requirements specified in the performance specifications specified in paragraphs (b)(6)(i) and (ii) of this section, as applicable.

(i) A hydrogen chloride or dioxin/furan CEMS must meet the requirements of the promulgated performance specification for the CEMS.

(ii) A total hydrocarbon CEMS must meet the requirements of 40 CFR Part 60, Appendix B, performance specification 8A.

(7) Before commencing or ceasing use of a CEMS system, you must notify the Administrator as specified in paragraphs (b)(7)(i) and (ii) of this section.

(i) You must notify the Administrator 1 month before starting use of the continuous emissions monitoring system.

(ii) You must notify the Administrator 1 month before stopping use of the continuous emissions monitoring system, in which case you must also conduct a performance test within 60 days of ceasing operation of the system.

(c) *CPMS.* You must install, maintain, and operate each CPMS as specified in paragraphs (c)(1) through (6) of this section and continuously monitor operating parameters.

(1) As part of your quality control program and site-specific performance evaluation test plan prepared as specified in § 63.8(d) and (e), you must prepare a site-specific monitoring plan that addresses the monitoring system design, data collection, and the quality assurance and quality control elements specified in paragraphs (c)(1)(i) through (v) of this section and § 63.8(d). You are

not required to submit the plan for approval unless requested by the Administrator. You may request approval of monitoring system quality assurance and quality control procedure alternatives to those specified in paragraphs (c)(1)(i) through (v) of this section in your site-specific monitoring plan.

(i) The performance criteria and design specifications for the monitoring system equipment, including the sample interface, detector signal analyzer, and data acquisition and calculations.

(ii) Sampling interface (*e.g.*, thermocouple) location such that the monitoring system will provide representative measurements.

(iii) Equipment performance checks, calibrations, or other audit procedures.

(iv) Ongoing operation and maintenance procedures in accordance with provisions in §63.8(c)(1) and (3).

(v) Ongoing reporting and recordkeeping procedures in accordance with provisions in §63.10(c), (e)(1) and (e)(2)(i).

(2) The monitoring equipment must be capable of providing a continuous record, recording data at least once every 15 minutes.

(3) You must install, operate, and maintain each CPMS according to the procedures and requirements in your site-specific monitoring plan.

(4) You must conduct an initial and periodic site-specific performance evaluation tests of each CPMS according to your site-specific monitoring plan.

(5) All CPMS must meet the specific parameter (*e.g.*, minimum accuracy and calibration frequency) requirements specified in §63.11940 and Table 7 to this subpart.

(6) Monitoring equipment for temperature, pressure, volumetric flow rate, mass flow rate and conductivity must be capable of measuring the appropriate parameter over a range that extends at least 20 percent beyond the normal expected operating range of values for that parameter. The data recording system associated with affected CPMS must have a resolution that is equal to or better than one-half of the required system accuracy.

(d) *Establish operating limit.* For each operating parameter that must be monitored in §63.11925(c) for process vent control devices, you must establish an operating limit as specified in paragraphs (d)(1) through (4) of this section. You must establish each operating limit as an operating parameter range, minimum operating parameter level, or maximum operating parameter level as specified in Table 7 to this subpart. Where this subpart does not specify which format to use for your operating limit (*e.g.*, operating range or minimum operating level), you must determine which format is best to establish proper operation of the control device such that you are meeting the emission limits specified in Table 1 or 2 to this subpart.

(1) For process vent control devices, the operating limit established for each monitored parameter specified in §63.11940 must be based on the operating parameter values recorded during any performance test conducted to demonstrate compliance as required by §63.11925(d)(4) and (e)(4) and may be supplemented by engineering assessments and/or manufacturer's recommendations. You are not required to conduct performance tests over the entire range of allowed operating parameter values. The established operating limit must represent the conditions for which the control device is meeting the emission limits specified in Table 1 or 2 to this subpart.

(2) You must include as part of the notification of compliance status or the operating permit application or amendment, the information in paragraphs (d)(2)(i) through (iv) of this section, as applicable, for each process vent control device requiring operating limits.

(i) Descriptions of monitoring devices, monitoring frequencies and operating scenarios.

(ii) The established operating limit of the monitored parameter(s).

(iii) The rationale for the established operating limit, including any data and calculations used to develop the operating limit and a description of why the operating limit indicates proper operation of the control device.

(iv) The rationale used to determine which format to use for your operating limit (*e.g.*, operating range, minimum operating level or maximum operating level), where this subpart does not specify which format to use.

(3) For batch processes, you may establish operating limits for individual batch emission episodes, including each distinct episode of process vent emissions or each individual type of batch process that generates wastewater, if applicable. You must provide rationale in a batch precompliance report as specified in § 63.11985(c)(2) instead of the notification of compliance status for the established operating limit. You must include any data and calculations used to develop the operating limits and a description of why each operating limit indicates proper operation of the control device during the specific batch emission episode.

(4) If you elect to establish separate operating limits for different batch emission episodes within a batch process as specified in paragraph (d)(3) of this section, you must maintain daily records indicating each point at which you change from one operating limit to another, even if the monitoring duration for an operating limit is less than 15 minutes. You must maintain a daily record according to § 63.11990(e)(4)(i).

(e) *Reduction of CPMS and CEMS data.* You must reduce CEMS and CPMS data to 1-hour averages according to § 63.8(g) to compute the average values for demonstrating compliance specified in §§ 63.11925(e)(3)(ii), 63.11925(e)(4)(ii)(B), and 63.11960(c)(2) for CEMS and CPMS, as applicable.

### § 63.11940 What continuous monitoring requirements must I meet for control devices required to install CPMS to meet the emission limits for process vents?

As required in § 63.11925(c), you must install and operate the applicable CPMS specified in paragraphs (a) through (g) of this section for each control device you use to comply with the emission limits for process vents in Table 1 or 2 to this subpart. You must monitor, record, and calculate CPMS data averages as specified in Table 7 to this subpart. Paragraph (h) of this section provides an option to propose alternative monitoring parameters or procedures.

(a) *Flow indicator.* If flow to a control device could be intermittent, you must install, calibrate, and operate a flow indicator at the inlet or outlet of the control device to identify periods of no flow.

(b) *Thermal oxidizer monitoring.* If you are using a thermal oxidizer to meet an emission limit in Table 1 or 2 to this subpart and you are required to use CPMS as specified in § 63.11925(c), you must equip the thermal oxidizer with the monitoring equipment specified in paragraphs (b)(1) through (3) of this section, as applicable.

(1) If a thermal oxidizer other than a catalytic thermal oxidizer is used, you must install a temperature monitoring device in the fire box or in the ductwork immediately downstream of the fire box in a position before any substantial heat exchange occurs.

(2) Except as provided in paragraph (b)(3) of this section, where a catalytic thermal oxidizer is used, you must install temperature monitoring devices in the gas stream immediately before and after the catalyst bed. You must monitor the temperature differential across the catalyst bed.

(3) Instead of complying with paragraph (b)(2) of this section, and if the temperature differential between the inlet and outlet of the catalytic thermal oxidizer during normal operating conditions is less than 10 degrees Celsius (18 degrees Fahrenheit), you may elect to monitor the inlet temperature and conduct catalyst checks as specified in paragraphs (b)(3)(i) and (ii) of this section.

(i) You must conduct annual sampling and analysis of the catalyst activity (*i.e.*, conversion efficiency) following the manufacturer's or catalyst supplier's recommended procedures. If problems are found during the catalyst activity test, you must replace the catalyst bed or take other corrective action consistent with the manufacturer's recommendations within 15 days or by the next time any process vent stream is collected by the control device, whichever is sooner.

(ii) You must conduct annual internal inspections of the catalyst bed to check for fouling, plugging, or mechanical breakdown. You must also inspect the bed for channeling, abrasion, and settling. If problems are found during the annual internal inspection of the catalyst, you must replace the catalyst bed or take other corrective action

consistent with the manufacturer's recommendations within 15 days or by the next time any process vent stream is collected by the control device, whichever is later. If the catalyst bed is replaced and is not of like or better kind and quality as the old catalyst then you must conduct a new performance test according to §63.11945 to determine destruction efficiency. If a catalyst bed is replaced and the replacement catalyst is of like or better kind and quality as the old catalyst, then a new performance test to determine destruction efficiency is not required.

(c) *Absorber and acid gas scrubber monitoring.* If you are using an absorber or acid gas scrubber to meet an emission limit in Table 1 or 2 to this subpart and you are required to use CPMS as specified in §63.11925(c), you must install the monitoring equipment specified in paragraphs (c)(1) through (3) of this section.

(1) Install and operate the monitoring equipment as specified in either paragraph (c)(1)(i) or (ii) of this section.

(i) A flow meter to monitor the absorber or acid gas scrubber influent liquid flow.

(ii) A flow meter to monitor the absorber or acid gas scrubber influent liquid flow and the gas stream flow using one of the procedures specified in paragraphs (c)(1)(ii)(A), (B), or (C) of this section. You must monitor the liquid-to-gas ratio determined by dividing the flow rate of the absorber or acid gas scrubber influent by the gas flow rate. The units of measure must be consistent with those used to calculate this ratio during the performance test.

(A) Determine gas stream flow using the design blower capacity, with appropriate adjustments for pressure drop.

(B) Measure the gas stream flow at the absorber or acid gas scrubber inlet.

(C) If you have previously determined compliance for a scrubber that requires a determination of the liquid-to-gas ratio, you may use the results of that test provided the test conditions are representative of current operation.

(2) Install and operate the monitoring equipment as specified in either paragraph (c)(2)(i), (ii), or (iii) of this section.

(i) Install and operate pressure gauges at the inlet and outlet of the absorber or acid gas scrubber to monitor the pressure drop through the absorber or acid gas scrubber.

(ii) If the difference in the inlet gas stream temperature and the inlet liquid stream temperature is greater than 38 degrees Celsius, you may install and operate a temperature monitoring device at the scrubber gas stream exit.

(iii) If the difference between the specific gravity of the scrubber effluent scrubbing fluid and specific gravity of the scrubber inlet scrubbing fluid is greater than or equal to 0.02 specific gravity units, you may install and operate a specific gravity monitoring device on the inlet and outlet of the scrubber.

(3) If the scrubbing liquid is a reactant (e.g., lime, ammonia hydroxide), you must install and operate one of the devices listed in either paragraph (c)(3)(i), (ii) or (iii) of this section.

(i) A pH monitoring device to monitor the pH of the scrubber liquid effluent.

(ii) A caustic strength monitoring device to monitor the caustic strength of the scrubber liquid effluent.

(iii) A conductivity monitoring device to monitor the conductivity of the scrubber liquid effluent.

(d) *Regenerative adsorber monitoring.* If you are using a regenerative adsorber to meet an emission limit in Table 1 or 2 to this subpart and you are required to use CPMS as specified in §63.11925(c), you must install and operate the applicable monitoring equipment listed in paragraphs (d)(1) through (5) of this section, and comply with the requirements in paragraphs (d)(6) and (7) of this section. If the adsorption system water is wastewater as defined in §63.12005, then it is subject to the requirements of §63.11965.

(1) For non-vacuum regeneration systems, an integrating regeneration stream flow monitoring device having an accuracy of ±10 percent, capable of recording the total regeneration stream mass for each regeneration cycle. For non-vacuum regeneration systems, an integrating regeneration stream flow monitoring device capable

of continuously recording the total regeneration stream mass flow for each regeneration cycle.

(2) For non-vacuum regeneration systems, an adsorber bed temperature monitoring device, capable of continuously recording the adsorber bed temperature after each regeneration and within 15 minutes of completing any temperature regulation (cooling or warming to bring bed temperature closer to vent gas temperature) portion of the regeneration cycle.

(3) For non-vacuum and non-steam regeneration systems, an adsorber bed temperature monitoring device capable of continuously recording the bed temperature during regeneration, except during any temperature regulating (cooling or warming to bring bed temperature closer to vent gas temperature) portion of the regeneration cycle.

(4) For a vacuum regeneration system, a pressure transmitter installed in the vacuum pump suction line capable of continuously recording the vacuum level for each minute during regeneration. You must establish a minimum target and a length of time at which the vacuum must be below the minimum target during regeneration.

(5) A device capable of monitoring the regeneration frequency (*i.e.*, operating time since last regeneration) and duration.

(6) You must perform a verification of the adsorber during each day of operation. The verification must be through visual observation or through an automated alarm or shutdown system that monitors and records system operational parameters. The verification must verify that the adsorber is operating with proper valve sequencing and cycle time.

(7) You must conduct weekly measurements of the carbon bed outlet volatile organic compounds concentration over the last 5 minutes of an adsorption cycle for each carbon bed. For regeneration cycles longer than 1 week, you must perform the measurement over the last 5 minutes of each adsorption cycle for each carbon bed. The outlet concentration of volatile organic compounds must be measured using a portable analyzer, in accordance with Method 21 at 40 CFR part 60, appendix A–7, for open-ended lines. Alternatively, outlet concentration of HAP(s) may be measured using chromatographic analysis using Method 18 at 40 CFR part 60, appendix A–6.

(e) *Non-regenerative adsorber monitoring*. If you are using a non-regenerative adsorber, or canister type system that is sent off site for regeneration or disposal, to meet an emission limit in Table 1 or 2 to this subpart and you are required to use CPMS as specified in § 63.11925(c), you must install a system of dual adsorber units in series and conduct the monitoring and bed replacement as specified in paragraphs (e)(1) through (4) of this section.

(1) Establish the average adsorber bed life by conducting daily monitoring of the outlet volatile organic compound or HAP concentration, as specified in this paragraph (e)(1), of the first adsorber bed in series until breakthrough occurs for the first three adsorber bed change-outs. The outlet concentration of volatile organic compounds must be measured using a portable analyzer, in accordance with Method 21 at 40 CFR part 60, appendix A–7, for open-ended lines. Alternatively, outlet concentration of HAP may be measured using chromatographic analysis using Method 18 at 40 CFR part 60, appendix A–6. Breakthrough of the bed is defined as the time when the level of HAP detected is at the highest concentration allowed to be discharged from the adsorber system.

(2) Once the average life of the bed is determined, conduct ongoing monitoring as specified in paragraphs (e)(2)(i) through (iii) of this section.

(i) Except as provided in paragraphs (e)(2)(ii) and (iii) of this section, conduct daily monitoring of the adsorber bed outlet volatile organic compound or HAP concentration, as specified in paragraph (e)(1) of this section.

(ii) You may conduct monthly monitoring if the adsorbent has more than 2 months of life remaining, as determined by the average primary adsorber bed life, established in paragraph (e)(1) of this section, and the date the adsorbent was last replaced.

(iii) You may conduct weekly monitoring if the adsorbent has more than 2 weeks of life remaining, as determined by the average primary adsorber bed

life, established in paragraph (e)(1) of this section, and the date the adsorbent was last replaced.

(3) The first adsorber in series must be replaced immediately when breakthrough is detected between the first and second adsorber. The original second adsorber (or a fresh canister) will become the new first adsorber and a fresh adsorber will become the second adsorber. For purposes of this paragraph (e)(3), ''immediately'' means within 8 hours of the detection of a breakthrough for adsorbers of 55 gallons or less, and within 24 hours of the detection of a breakthrough for adsorbers greater than 55 gallons.

(4) In lieu of replacing the first adsorber immediately, you may elect to monitor the outlet of the second canister beginning on the day the breakthrough between the first and second canister is identified and each day thereafter. This daily monitoring must continue until the first canister is replaced. If the constituent being monitored is detected at the outlet of the second canister during this period of daily monitoring, both canisters must be replaced within 8 hours of the time of detection of volatile organic compounds or HAP at 90 percent of the allowed level (90 percent of breakthrough definition).

(f) *Condenser monitoring.* If you are using a condenser to meet an emission limit in Table 1 or 2 to this subpart and you are required to use CPMS as specified in § 63.11925(c), you must install and operate a condenser exit gas temperature monitoring device.

(g) *Other control devices.* If you use a control device other than those listed in this subpart to comply with an emission limit in Table 1 or 2 to this subpart and you are required to use CPMS as specified in § 63.11925(c), you must comply with the requirements as specified in paragraphs (g)(1) and (2) of this section.

(1) Submit a description of the planned monitoring, recordkeeping, and reporting procedures. The Administrator will approve, deny or modify the proposed monitoring, reporting and recordkeeping requirements as part of the review of the plan or through the review of the permit application or by other appropriate means.

(2) You must establish operating limits for monitored parameters that are approved by the Administrator. To establish the operating limit, the information required in § 63.11935(d) must be submitted in the notification of compliance status report specified in § 63.11985(a).

(h) *Alternatives to monitoring requirements.* (1) You may request approval to use alternatives to the continuous operating parameter monitoring listed in this section, as specified in §§ 63.11985(c)(4) and 63.8.

(2) You may request approval to monitor a different parameter than those established in § 63.11935(d) or to set unique monitoring parameters, as specified in §§ 63.11985(c)(5) and 63.8. Until permission to use an alternative monitoring parameter has been granted by the Administrator, you remain subject to the requirements of this subpart.

### § 63.11945 What performance testing requirements must I meet for process vents?

(a) *General.* For each control device used to meet the emission limits for process vents in Table 1 or 2 to this subpart, you must conduct the initial and periodic performance tests required in § 63.11925(d) and (e) and as specified in § 63.11896 using the applicable test methods and procedures specified in Table 8 to this subpart and paragraphs (b) through (d) of this section.

(b) *Process operating conditions.* You must conduct performance tests under the conditions specified in paragraphs (b)(1) through (3) of this section, as applicable. Upon request, the owner or operator shall make available to the Administrator such records as may be necessary to determine the conditions of performance tests. In all cases, a site-specific plan must be submitted to the Administrator for approval prior to testing in accordance with § 63.7(c). The test plan must include the emission profiles described in § 63.11925(g).

(1) *Continuous process vents.* For continuous process vents, you must conduct all performance tests at maximum representative operating conditions for the process. For continuous compliance, you must conduct subsequent performance tests within the range of operating limit(s) that were

established for the control device during the initial or subsequent performance tests specified in § 63.11925(d) and (e). If an operating limit is a range, then you must conduct subsequent performance tests within the range of maximum or minimum operating limits for the control device, which result in highest emissions (*i.e.*, lowest emission reduction).

(2) *Batch process operations.* Testing must be conducted at absolute worst-case conditions or hypothetical worst-case conditions as specified in paragraph (c) of this section.

(3) *Combination of both continuous and batch unit operations.* You must conduct performance tests when the batch process vents are operating at absolute worst-case conditions or hypothetical worst-case conditions, as specified in paragraphs (c)(1) and (2) of this section, and at maximum representative operating conditions for the process. For continuous compliance, you must operate the control device as close as possible to your operating limit(s) for the control device established during the initial or subsequent performance tests specified in § 63.11925 (d) and (e). If an operating limit is a range, then you must operate the control device as close as possible to the maximum or minimum operating limit for the control device, whichever results in higher emissions (*i.e.*, lower emission reduction), unless the Administrator specifies or approves alternate operating conditions.

(c) *Batch worst-case conditions.* The absolute worst-case conditions for batch process operations must be characterized by the criteria presented in paragraph (c)(1) of this section. The hypothetical worst-case conditions for batch process operations must be characterized by the criteria presented in paragraph (c)(2) of this section.

(1) *Absolute worst-case conditions.* For batch process operations, absolute worst-case conditions are defined by the criteria presented in paragraph (c)(1)(i) of this section if the maximum load is the most challenging condition for the control device. Otherwise, absolute worst-case conditions are defined by the conditions in paragraph (c)(1)(ii) of this section. You must consider all relevant factors, including load and compound-specific characteristics in defining absolute worst-case conditions.

(i) A 1-hour period of time in which the inlet to the control device contains the highest HAP mass loading rate, in pounds per hour, capable of being vented to the control device. An emission profile as described in § 63.11925(g) must be used to identify the 1-hour period of maximum HAP loading.

(ii) The period of time when the HAP loading or stream composition (including non-HAP) is most challenging for the control device. These conditions include, but are not limited to the following:

(A) Periods when the stream contains the highest combined organic load, in pounds per hour, described by the emission profiles in § 63.11925(g).

(B) Periods when the streams contain HAP constituents that approach limits of solubility for scrubbing media.

(C) Periods when the streams contain HAP constituents that approach limits of adsorptivity for adsorption systems.

(2) *Hypothetical worst-case conditions.* For batch process operations, hypothetical worst-case conditions are simulated test conditions that, at a minimum, contain the highest hourly HAP load of emissions that would be predicted to be vented to the control device based on the emissions profiles described in paragraphs (c)(3)(ii) or (iii) of this section.

(3) *Emission profile.* For batch process operations, you must develop an emission profile for the vent to the control device that describes the characteristics of the vent stream at the inlet to the control device under worst-case conditions. The emission profile must be developed based on any one of the procedures described in paragraphs (c)(3)(i) through (iii) of this section.

(i) *Emission profile by process.* The emission profile must consider all batch emission episodes that could contribute to the vent stack for a period of time that is sufficient to include all processes venting to the stack and must consider production scheduling. The profile must describe the HAP load to the device that equals the highest sum of emissions from the episodes that can vent to the control device in any given hour. Emissions per episode

must be calculated using the procedures specified in §63.11950. Emissions per episode must be divided by the duration of the episode only if the duration of the episode is longer than 1 hour.

(ii) *Emission profile by equipment.* The emission profile must consist of emissions that meet or exceed the highest emissions, in pounds per hour that would be expected under actual processing conditions. The profile must describe equipment configurations used to generate the emission events, volatility of materials processed in the equipment, and the rationale used to identify and characterize the emission events. The emissions may be based on using a compound more volatile than compounds actually used in the process(es), and the emissions may be generated from all equipment in the process(es) or only selected equipment.

(iii) *Emission profile by capture and control device limitation.* The emission profile must consider the capture and control system limitations and the highest emissions, in pounds per hour that can be routed to the control device, based on maximum flow rate and concentrations possible because of limitations on conveyance and control equipment (e.g., fans and lower explosive level alarms).

(d) *Concentration correction calculation.* If a combustion device is the control device and supplemental combustion air is used to combust the emissions, the concentration of total hydrocarbons, total organic HAP, vinyl chloride, and hydrogen chloride must be corrected as specified in paragraph (d)(1) or (2) of this section. If a control device other than a combustion device is used to comply with an outlet concentration emission limit for batch process vents, you must correct the actual concentration for supplemental gases as specified in paragraph (d)(3) of this section.

(1) Determine the concentration of total hydrocarbons, total organic HAP, vinyl chloride, or hydrogen chloride corrected to 3-percent oxygen (Cc) using Equation 1 of this section.

$$C_c = C_m \left( \frac{17.9}{20.9 - \%O_{2d}} \right) \qquad \text{(Eq. 1)}$$

*Where:*

$C_c$ = Concentration of total hydrocarbons, total organic HAP, vinyl chloride, or hydrogen chloride corrected to 3-percent oxygen, dry basis, parts per million by volume.

$C_m$ = Concentration of total hydrocarbons, total organic HAP, vinyl chloride, or hydrogen chloride, dry basis, parts per million by volume.

$\%O_{2d}$ = Concentration of oxygen, dry basis, percentage by volume.

(2) To determine the oxygen concentration, you must use the emission rate correction factor (or excess air), integrated sampling and analysis procedures of Method 3, 3A, or 3B at 40 CFR part 60, appendix A–2, or ANSI/ASME PTC 19.10–1981 (incorporated by reference, see §63.14).

(3) Correct the measured concentration for supplemental gases using Equation 2 of this section. Process knowledge and representative operating data may be used to determine the fraction of the total flow due to supplemental gas.

$$C_a = C_m \left( \frac{Q_s + Q_a}{Q_a} \right) \qquad \text{(Eq. 2)}$$

*Where:*

$C_a$ = Corrected outlet concentration of HAP, dry basis, parts per million by volume (ppmv).

$C_m$ = Actual concentration of HAP measured at control device outlet, dry basis, ppmv.

$Q_a$ = Total volumetric flow rate of all gas streams vented to the control device, except supplemental gases.

$Q_s$ = total volumetric flow rate of supplemental gases.

### § 63.11950 What emissions calculations must I use for an emission profile?

When developing your emission profiles for batch process vents as required in § 63.11925(g), except as specified in paragraph (i) of this section, you must calculate emissions from episodes caused by vapor displacement, purging a partially filled vessel, heating, depressurization, vacuum operations, gas evolution, air drying, or empty vessel purging, using the applicable procedures in paragraphs (a) through (h) of this section.

(a) *Vapor displacement.* You must calculate emissions from vapor displacement due to transfer of material using Equation 1 of this section.

$$E = \left(\frac{V}{RT}\right)\sum_{i=1}^{n} P_i\left(MW_i\right) \qquad \text{(Eq. 1)}$$

(Eq. 1)

*Where:*

E = Mass of HAP emitted.

V = Volume of gas displaced from the vessel.

R = Ideal gas law constant.

T = Temperature of the vessel vapor space; absolute.

$P_i$ = Partial pressure of the individual HAP.

$MW_i$ = Molecular weight of the individual HAP.

n = Number of HAP compounds in the emission stream.

i = Identifier for a HAP compound.

(b) *Gas sweep of a partially filled vessel.* You must calculate emissions from purging a partially filled vessel using Equation 2 of this section. The pressure of the vessel vapor space may be set equal to 760 millimeters of mercury (mmHg). You must multiply the HAP partial pressure in Equation 2 of this section by a HAP-specific saturation factor determined in accordance with Equations 3 through 5 of this section. Solve Equation 3 of this section iteratively beginning with saturation factors (in the right-hand side of the equation) of 1.0 for each condensable compound. Stop iterating when the calculated saturation factors for all compounds are the same to two significant figures for subsequent iterations. Note that for multi-component emission streams, saturation factors must be calculated for all condensable compounds, not just the HAP.

$$E = \sum_{i=1}^{n} P_i MW_i \left(\frac{Vt}{RT}\right)\left(\frac{P_T}{P_T - \sum_{j=1}^{m}(P_j)}\right) \qquad \text{(Eq. 2)}$$

(Eq. 2)

*Where:*

E = Mass of HAP emitted.

V = Purge flow rate of the noncondensable gas at the temperature and pressure of the vessel vapor space.
R = Ideal gas law constant.
T = Temperature of the vessel vapor space; absolute.
$P_i$ = Partial pressure of the individual HAP at saturated conditions.
$P_j$ = Partial pressure of individual condensable compounds (including HAP) at saturated conditions.
$P_T$ = Pressure of the vessel vapor space.
$MW_i$ = Molecular weight of the individual HAP.
t = Time of purge.
n = Number of HAP compounds in the emission stream.
i = Identifier for a HAP compound.
j = Identifier for a condensable compound.
m = Number of condensable compounds (including HAP) in the emission stream.

$$S_i = \frac{K_i A}{K_i A + V + \sum_{i=1}^{n} S_i V_i^{sat}} \qquad \text{(Eq. 3)}$$

$$V_i^{sat} = \frac{VP_i}{\left(P_T - \sum_{i=1}^{n} P_i\right)} \qquad \text{(Eq. 4)}$$

$$K_i = K_o \left(\frac{M_o}{M_i}\right)^{1/3} \qquad \text{(Eq. 5)}$$

*Where:*

$S_i$ = Saturation factor for individual condensable compounds.
$P_i$ = Partial pressure of individual condensable compounds at saturated conditions.
PT = Pressure of the vessel vapor space.
A = Surface area of liquid.
V = Purge flow rate of the noncondensable gas.
$V_i^{sat}$ = Volumetric flow rate of individual condensable compounds at saturated vapor pressure.
$K_i$ = Mass transfer coefficient of individual condensable compounds in the emission stream.
$K_o$ = Mass transfer coefficient of reference compound (*e.g.*, 0.83 cm/s for water).
$M_o$ = Molecular weight of reference compound (*e.g.*, 18.02 for water).
$M_i$ = Molecular weight of individual condensable compounds in the emission stream.
n = Number of condensable compounds in the emission stream.

(c) *Heating*. You must calculate emissions caused by the heating of a vessel

to a temperature lower than the boiling point using the procedures in paragraph (c)(1) of this section. If the contents of a vessel are heated to the boiling point, you must calculate emissions using the procedures in paragraph (c)(2) of this section.

(1) If the final temperature to which the vessel contents are heated is lower than the boiling point of the HAP in the vessel, you must calculate the mass of HAP emitted per episode using Equation 6 of this section. The average gas space molar volume during the heating process is calculated using Equation 7 of this section. The difference in the number of moles of condensable in the vessel headspace between the initial and final temperatures is calculated using Equation 8 of this section.

$$E = MW_{HAP}\left[N_{avg}\ \ln\left[\frac{P_T - \sum_{i=1}^{n}\left(P_{i,1}\right)}{P_T - \sum_{i=1}^{n}\left(P_{i,2}\right)}\right] - \left(n_{i,2} - n_{i,1}\right)\right] \qquad \text{(Eq. 6)}$$

(Eq. 6)

*Where:*

E = Mass of HAP vapor displaced from the vessel being heated.

$N_{avg}$ = Average gas space molar volume during the heating process.

$P_T$ = Total pressure in the vessel.

$P_{i,1}$ = Partial pressure of the individual HAP compounds at initial temperature ($T_1$).

$P_{i,2}$ = Partial pressure of the individual HAP compounds at final temperature ($T_2$).

$MW_{HAP}$ = Average molecular weight of the HAP compounds calculated using Equation 13 of this section.

$n_{i,1}$ = Number of moles of condensable in the vessel headspace at initial temperature ($T_1$).

$n_{i,2}$ = Number of moles of condensable in the vessel headspace at final temperature ($T_2$).

n = Number of HAP compounds in the emission stream.

ln = Natural logarithm.

$$N_{avg} = \frac{VP_T}{2R}\left(\frac{1}{T_1} + \frac{1}{T_2}\right) \qquad \text{(Eq. 7)}$$

(Eq. 7)

*Where:*

$N_{avg}$ = Average gas space molar volume during the heating process.

V = Volume of free space in vessel.

$P_T$ = Total pressure in the vessel.

R = Ideal gas law constant.

$T_1$ = Initial temperature of the vessel.

$T_2$ = Final temperature of the vessel.

$$\left(n_{i,2} - n_{i,1}\right) = \frac{V}{RT_2}\sum_{i=1}^{n} P_{i,2} - \frac{V}{RT_1}\sum_{i=1}^{n} P_{i,1} \qquad \text{(Eq. 8)}$$

*Where:*

V = Volume of free space in vessel.

R = Ideal gas law constant.

$T_1$ = Initial temperature in the vessel.

$T_2$ = Final temperature in the vessel.

$P_{i,1}$ = Partial pressure of the individual HAP compounds at $T_1$.

$P_{i,2}$ = Partial pressure of the individual HAP compounds at $T_2$.

n = Number of HAP compounds in the emission stream.

(2) If the final temperature to which the vessel contents are heated is at the boiling point or higher, you must calculate emissions using the procedure in paragraphs (c)(2)(i) and (ii) of this section.

(i) To calculate the emissions from heating to the boiling point use Equations 9, 10 and 11 of this section. (Note that $Pa_2 = 0$ in the calculation of $\Delta\eta$ in Equation 10 of this section.)

$$E = \Delta\eta \times \frac{\sum_{i=1}^{n} P_i MW_{HAP}}{P_T - \sum_{j=1}^{m} \left(P_j\right)} \qquad \text{(Eq. 9)}$$

*Where:*

E = Mass of HAP emitted.

$\Delta\eta$ = The number of moles of noncondensable displaced from the vessel, as calculated using Equation 10 of this section.

$P_T$ = Pressure in the receiver.

$P_i$ = Partial pressure of the individual HAP determined at the exit temperature of the condenser or at the conditions of the dedicated receiver.

$P_j$ = Partial pressure of the individual condensable (including HAP) determined at the exit temperature of the condenser or at the conditions of the dedicated receiver.

n = Number of HAP compounds in the emission stream.

i = Identifier for a HAP compound.

j = Identifier for a condensable compound.

$MW_{HAP}$ = The average molecular weight of HAP in vapor exiting the dedicated receiver, as calculated using Equation 11 of this section with partial pressures determined at the exit temperature and exit pressure conditions of the condenser or at the conditions of the dedicated receiver.

m = Number of condensable compounds (including HAP) in the emission stream.

$$\Delta\eta = \frac{V}{R}\left[\left(\frac{Pa_1}{T_1}\right) - \left(\frac{Pa_2}{T_2}\right)\right] \qquad \text{(Eq. 10)}$$

$$MW_{HAP} = \sum_{i=1}^{n} \frac{\left(\left(P_i\right)_{T_1} + \left(P_i\right)_{T_2}\right) MW_i}{\sum_{i=1}^{n}\left(\left(P_i\right)_{T_1} + \left(P_i\right)_{T_2}\right)} \qquad \text{(Eq. 11)}$$

*Where:*

$\Delta\eta$ = Number of moles of noncondensable gas displaced from the vessel.

V = Volume of free space in the vessel.

R = Ideal gas law constant.

$T_1$ = Initial temperature of vessel contents, absolute.

$T_2$ = Final temperature of vessel contents, absolute.
Pan = Partial pressure of noncondensable gas in the vessel headspace at initial (n = 1) and final (n = 2) temperature.
$MW_{HAP}$ = The average molecular weight of HAP in vapor exiting the dedicated receiver.
$(P_i)Tn$ = Partial pressure of each HAP in the vessel headspace at initial ($T_1$) and final ($T_2$) temperature of the receiver.
$MW_i$ = Molecular weight of the individual HAP.
n = Number of HAP compounds in the emission stream.
i = Identifier for a HAP compound.

(ii) While boiling, the vessel must be operated with a properly operated process condenser. An initial demonstration that a process condenser is properly operated must be conducted during the boiling operation and documented in the notification of compliance status report described in § 63.11985(a). You must either measure the liquid temperature in the receiver or the temperature of the gas stream exiting the condenser and show it is less than the boiling or bubble point of the HAP in the vessel; or perform a material balance around the vessel and condenser and show that at least 99 percent of the recovered HAP vaporized while boiling is condensed. This demonstration is not required if the process condenser is followed by a condenser acting as a control device or if the control device is monitored using a CEMS.

(d) *Depressurization*. You must calculate emissions from depressurization using Equation 12 of this section.

$$E = \frac{V}{RT} \times \ln\left(\frac{P_1 - \sum_{j=1}^{m}(P_j)}{P_2 - \sum_{j=1}^{m}(P_j)}\right) \times \sum_{i=1}^{n}(P_i)(MW_i) \qquad \text{(Eq. 12)}$$

*Where:*
E = Emissions.
V = Free volume in vessel being depressurized.
R = Ideal gas law constant.
T = Temperature of the vessel, absolute.
$P_1$ = Initial pressure in the vessel.
$P_2$ = Final pressure in the vessel.
$P_j$ = Partial pressure of the individual condensable compounds (including HAP).
$MW_i$ = Molecular weight of the individual HAP compounds.
n = Number of HAP compounds in the emission stream.
m = Number of condensable compounds (including HAP) in the emission stream.
i = Identifier for a HAP compound.
j = Identifier for a condensable compound.
ln = Natural logarithm.

(e) *Vacuum systems*. You must calculate emissions from vacuum systems using Equation 13 of this section if the air leakage rate is known or can be approximated. The receiving vessel is part of the vacuum system for purposes of this subpart.

$$E = \frac{(La)(t)}{MW_{nc}}\left(\frac{\sum_{i=1}^{n} P_i MW_i}{P_T - \sum_{j=1}^{m}(P_j)}\right) \qquad \text{(Eq. 13)}$$

*Where:*

E = Mass of HAP emitted.

$P_T$ = Absolute pressure of receiving vessel or ejector outlet conditions, if there is no receiver.

$P_i$ = Partial pressure of the HAP at the receiver temperature or the ejector outlet conditions.

$P_j$ = Partial pressure of condensable (including HAP) at the receiver temperature or the ejector outlet conditions.

La = Total air leak rate in the system, mass/time.

$MW_{nc}$ = Molecular weight of noncondensable gas.

t = Time of vacuum operation.

MWi = Molecular weight of the individual HAP in the emission stream, with HAP partial pressures calculated at the temperature of the receiver or ejector outlet, as appropriate.

(f) *Gas evolution.* You must calculate emissions from gas evolution using Equation 13 in paragraph (e) of this section with mass flow rate of gas evolution, Wg, substituted for La.

(g) *Air drying.* You must calculate emissions from air drying using Equation 14 of this section:

$$E = B \times \left( \frac{PS_1}{100 - PS_1} - \frac{PS_2}{100 - PS_2} \right) \qquad \text{(Eq. 14)}$$

*Where:*

E = Mass of HAP emitted.

B = Mass of dry solids.

$PS_1$ = HAP in material entering dryer, weight percent.

$PS_2$ = HAP in material exiting dryer, weight percent.

(h) *Empty vessel purging.* You must calculate emissions from empty vessel purging using Equation 15 of this section (Note: The term e-Ft/v can be assumed to be 0):

$$E = \left( \frac{V}{RT} \times \left[ \sum_{i=1}^{n} (P_i)(MW_i) \right] (1 - e^{-Ft/v}) \right) \qquad \text{(Eq. 15)}$$

*Where:*

V = Volume of empty vessel.

R = Ideal gas law constant.

T = Temperature of the vessel vapor space; absolute.

$P_i$ = Partial pressure of the individual HAP at the beginning of the purge.

$MW_i$ = Molecular weight of the individual HAP.

F = Flow rate of the purge gas.

t = Duration of the purge.

n = Number of HAP compounds in the emission stream.

i = Identifier for a HAP compound.

(i) *Engineering assessments.* You must conduct an engineering assessment to calculate HAP emissions or emission episodes from each process vent that are not due to vapor displacement, partially filled vessel purging, heating, depressurization, vacuum operations, gas evolution, air drying or empty vessel purging. An engineering assessment may also be used to support a finding that the emissions estimation equations in this section are inappropriate. All data, assumptions and procedures used in the engineering assessment must be documented, are subject to preapproval by the Administrator, and must be reported in the batch precompliance report. An engineering assessment should include, but is not limited to, the items listed in paragraphs (i)(1) through (4) of this section.

(1) Previous test results provided the tests are representative of current operating practices at the process unit.

(2) Bench-scale or pilot-scale test data representative of the process under representative operating conditions.

(3) Maximum flow rate, HAP emission rate, concentration, or other relevant parameter specified or implied within a permit limit applicable to the process vent.

(4) Design analysis based on accepted chemical engineering principles, measurable process parameters, or physical or chemical laws or properties. Examples of analytical methods include, but are not limited to the following:

(i) Use of material balances based on process stoichiometry to estimate maximum organic HAP concentrations.

(ii) Estimation of maximum flow rate based on physical equipment design such as pump or blower capacities.

(iii) Estimation of HAP concentrations based on saturation conditions.

### § 63.11955 What are my initial and continuous compliance requirements for other emission sources?

(a) Before opening any process component (including pre-polymerization reactors used in the manufacture of bulk resins) for any reason, the quantity of vinyl chloride must be reduced to an amount that occupies a volume of no more than 2.0 percent of the component's or equipment's containment volume, or 25 gallons, whichever is larger, at standard temperature and pressure.

(b) Before opening a polymerization reactor for any reason, the quantity of vinyl chloride is not to exceed 0.04 pounds per ton of PVC product, with the product determined on a dry solids basis.

(c) Any gas or vapor HAP removed from a process component in accordance with paragraphs (a) and (b) of this section must be vented to a closed vent system and control device meeting the requirements of §§ 63.11925 through 63.11950.

(d) Each gasholder in vinyl chloride service must meet the requirements of paragraphs (d)(1) through (3) of this section.

(1) Each gasholder must be vented to a closed vent system and control device meeting the requirements of §§ 63.11925 through 63.11950.

(2) Each gasholder must operate with one or more of the following installed on the water seal to reduce emissions:

(i) Floating balls;

(ii) Hollow floating disks;

(iii) Oil layer; and/or

(iv) Floating mats.

(3) Each gasholder must have established operating procedures that include provisions for ensuring that the requirements of paragraph (d)(2) of this section are met at all times except during periods of maintenance or repair. The standard operating procedures must be developed and implemented and made available to the Administrator upon request.

### § 63.11956 What are my compliance requirements for ambient monitoring?

You must operate a reliable and accurate vinyl chloride monitoring system for detection of major leaks and identification of the general area of the affected source where a leak is located. A vinyl chloride monitoring system means a device which obtains air samples from one or more points on a continuous sequential basis and analyzes the samples with gas chromatography or, if you assume that all hydrocarbons measured are vinyl chloride, analyzes the samples with infrared spectrophotometry, flame ion detection, or an equivalent or alternative method. You must operate the vinyl chloride monitoring system according to a program that you develop for your affected source. You must submit a description of the program to the Administrator within 45 days of your compliance date, unless a waiver of compliance is granted by the Administrator, or the program has been approved and the Administrator does not request a review of the program. Approval of a program will be granted by the Administrator provided the Administrator finds:

(a) The location and number of points to be monitored and the frequency of monitoring provided for in the program are acceptable when they are compared with the number of pieces of equipment in vinyl chloride service and size and physical layout of the affected source.

(b) It contains a definition of leak which is acceptable when compared with the background concentrations of vinyl chloride in the areas of the plant to be monitored by the vinyl chloride monitoring system. Measurements of

background concentrations of vinyl chloride in the areas of the plant to be monitored by the vinyl chloride monitoring system are to be included with the description of the program. The definition of leak for a given plant may vary among the different areas within the plant and is also to change over time as background concentrations in the plant are reduced.

(c) It contains an acceptable plan of action to be taken when a leak is detected.

(d) It provides for an acceptable calibration and maintenance schedule for the vinyl chloride monitoring system and portable hydrocarbon detector. For the vinyl chloride monitoring system, a daily span check must be conducted with a concentration of vinyl chloride equal to the concentration defined as a leak according to paragraph (b) of this section. The calibration must be done with either:

(1) A calibration gas mixture prepared from the gases specified in sections 7.2.1 and 7.2.2 of Method 106 at 40 CFR part 61, appendix B, and in accordance with section 10.1 of Method 106, or

(2) A calibration gas cylinder standard containing the appropriate concentration of vinyl chloride. The gas composition of the calibration gas cylinder standard must have been certified by the manufacturer. The manufacturer must have recommended a maximum shelf life for each cylinder so that the concentration does not change greater than ±5 percent from the certified value. The date of gas cylinder preparation, certified vinyl chloride concentration, and recommended maximum shelf life must have been affixed to the cylinder before shipment from the manufacturer to the buyer. If a gas chromatograph is used as the vinyl chloride monitoring system, these gas mixtures may be directly used to prepare a chromatograph calibration curve as described in Sections 8.1 and 9.2 of Method 106. The requirements in Sections 7.2.3.1 and 7.2.3.2 of Method 106 for certification of cylinder standards and for establishment and verification of calibration standards are to be followed.

### § 63.11960 What are my initial and continuous compliance requirements for stripped resin?

(a) *Emission limits*. You must meet the applicable vinyl chloride and total non-vinyl chloride organic HAP emission limits for stripped resin specified in Table 1 or 2 to this subpart.

(b) *Determination of total non-vinyl chloride organic HAP*. You must develop a facility-specific list of HAP that are expected to be present in each grade of resin produced by your PVCPU. This list must be continuously updated and must be available for inspection by the Administrator. This list must include the identification of each grade of resin produced, each HAP expected to be present in that grade of resin, and the CAS number for each HAP.

(1) For the purposes of demonstrating initial and continuous compliance as required in paragraphs (c) and (d) of this section, you must meet the requirements specified in paragraphs (b)(1)(i) and (b)(1)(ii) of this section.

(i) You must analyze each resin sample for all Table 10 HAP using the test methods specified in paragraph (e) of this section.

(ii) You must also analyze each resin sample for any HAP that are not a Table 10 HAP but are expected to be present in that resin sample based on your facility-specific list of HAP using the appropriate test method specified in paragraph (e) of this section.

(2) [Reserved]

(c) *Demonstration of initial compliance*. You must demonstrate initial compliance for each resin stripper or for each group of resin strippers used to process the same resin type.

(1) You must conduct an initial performance test for the resin stripper, measuring the concentration of vinyl chloride and total non-vinyl chloride organic HAP in the stripped resin at the outlet of each resin stripper as specified in paragraphs (c)(1)(i) through (iv) of this section.

(i) Use the test method(s) and procedures specified in paragraph (e) of this section.

(ii) Collect samples when the PVCPU is producing the resin grade of which you manufacture the most, based on the total mass per resin grade of a

given resin type produced in the 12 months preceding the sampling event.

(iii) For continuous processes, during a 24-hour sampling period, for each resin grade produced, collect 1 grab sample at intervals of 8 hours or per grade of PVC produced, whichever is more frequent. Each sample must be taken as the resin flows out of the stripper.

(iv) For batch processes, during a 24-hour sampling period, for each batch of each resin grade produced, collect 1 grab sample for each batch. Each sample must be taken immediately following the completion of the stripping operation.

(2) Demonstrate initial compliance with the vinyl chloride and total non-vinyl chloride organic HAP emission limits in Table 1 or 2 to this subpart as specified in paragraphs (c)(2)(i) and (ii) of this section.

(i) Calculate the 24-hour arithmetic average vinyl chloride and total non-vinyl chloride organic HAP concentrations for each stripper for each resin grade produced during the 24-hour sampling period, using the vinyl chloride and non vinyl-chloride HAP concentrations measured for the grab samples collected as specified in paragraph (c)(1)(iii) and (iv) of this section and using the calculation procedure specified in paragraph (f) of this section to determine the total non-vinyl chloride organic HAP concentration of each sample.

(ii) Demonstrate compliance with the vinyl chloride and total non-vinyl chloride organic HAP emission limits in Table 1 or 2 to this subpart based on the 24-hour arithmetic average concentrations calculated in either paragraph (c)(2)(ii)(A) or (B) of this section.

(A) If more than one resin grade was produced during the 24-hour sampling period, use Equation 1 of this section to calculate the 24-hour grade weighted arithmetic average vinyl chloride and total non-vinyl chloride organic HAP concentrations for each stripper, or for each group of strippers used to process the same type of resin, using the 24-hour average vinyl chloride and total non-vinyl chloride organic HAP concentrations calculated in paragraph (c)(2)(i) of this section and the mass of each resin grade produced during the 24-hour sampling period.

$$A_T = \frac{\Sigma_{i=1}^{n} P_{Gi} C_{Gi}}{Q_T} = \frac{P_{G_1} C_{G_1} + P_{G_2} C_{G_2} + \ \ldots + P_{Gn} C_{Gn}}{Q_T} \qquad \text{(Eq. 1)}$$

*Where:*

$A_T$ = 24-hour average concentration of resin type T, parts per million by weight (dry basis).

$P_{Gi}$ = Production of resin grade $G_i$, pounds.

$C_{Gi}$ = 24-hour average concentration of vinyl chloride or total non-vinyl chloride organic HAP in resin grade $G_i$, ppmw.

$Q_T$ = Total production of resin type T over the 24-hour sampling period, pounds.

(B) If only one resin grade was produced during the 24-hour sampling event, use the 24-hour arithmetic average vinyl chloride and total non-vinyl chloride organic HAP concentrations for the one resin grade calculated as specified in paragraph (c)(2)(i) of this section for each stripper or calculate the 24-hour arithmetic average vinyl chloride and total non-vinyl chloride organic HAP concentrations for all strippers used to process the one grade of resin.

(d) *Demonstration of continuous compliance.* You must demonstrate continuous compliance for each resin stripper or for each group of resin strippers used to process the same resin type.

(1) On a daily basis, you must measure the concentration of vinyl chloride in stripped resin using the test method(s) and procedures specified in paragraph (e) of this section, and the procedures specified in paragraphs (c)(1)(iii) and (iv) of this section.

(2) On a monthly basis, you must measure the concentration of total non-vinyl chloride organic HAP in stripped resin using the test method(s) and procedures specified in paragraph (e) of this section, and the procedures

specified in paragraphs (c)(1)(iii) and (iv) of this section.

(3) You must demonstrate continuous compliance with the vinyl chloride and total non-vinyl chloride organic HAP emission limit for stripped resin in Table 1 or 2 to this subpart as specified in paragraphs (c)(2)(i) and (ii) of this section.

(e) *Test methods and procedures for determining concentration of vinyl chloride and total non-vinyl chloride organic HAP.* You must determine the concentration of vinyl chloride and total non-vinyl chloride organic HAP using the test methods and procedures specified in paragraphs (e)(1) through (3) of this section. Upon request, the owner or operator shall make available to the Administrator such records as may be necessary to determine the conditions of performance tests.

(1) For measuring total non-vinyl chloride organic HAP, you must use the methods specified in paragraphs (e)(1)(i) through (iv) of this section.

(i) SW–846–8260B (incorporated by reference, see §63.14) for analysis of volatile organic compounds listed in Table 10 of this subpart.

(ii) SW–846–8270D (incorporated by reference, see §63.14) for analysis of semivolatile organic compounds listed in table 10 of this subpart.

(iii) SW–846–8315A (incorporated by reference, see §63.14) for analysis of aldehyde compounds listed in table 10 of this subpart.

(iv) SW–846–8015C (incorporated by reference, see §63.14) for analysis of alcohol compounds listed in table 10 of this subpart.

(2) For measuring vinyl chloride, you must use Method 107 at 40 CFR part 61, appendix B.

(3) When using the methods specified in paragraphs (e)(1) and (2) of this section, for sample collection, preservation, transport, and analysis, you must minimize loss of HAP and maintain sample integrity.

(f) *Method for calculating total non-vinyl chloride organic HAP concentration.* For each stripped resin sample analyzed using the methods specified in paragraph (e) of this section, calculate the sum of the measured concentrations of each HAP analyzed as required in paragraphs (b)(1)(i) and (b)(1)(ii) of this section by using Equation 2 to this section.

$$C_{TNVCH} = \sum_{i=1}^{n} C_i \qquad \text{(Eq. 2)}$$

*Where:*

$C_{TNVCH}$ = Concentration of total non-vinyl chloride organic HAP compounds in the stripped resin sample, in parts per million by weight (ppmw).

$C_i$ = Concentration of individual HAP present in the stripped resin sample analyzed pursuant to paragraphs (b)(1)(i) and (b)(1)(ii) of this section excluding vinyl chloride, in ppmw, where a value of zero should be used for any HAP concentration that is below the detection limit.

### §63.11965 What are my general compliance requirements for wastewater?

(a) The concentration of vinyl chloride and total non-vinyl chloride organic HAP in each process wastewater stream containing greater than the limits specified in Table 1 or 2 to this subpart, measured immediately as it leaves a piece of process equipment and before being mixed with any other process wastewater stream, must be reduced to the limits specified in Table 1 or 2 to this subpart. The applicable limits in Table 1 or 2 to this subpart must be met before the process wastewater stream is mixed with any other process wastewater stream containing vinyl chloride or total non-vinyl chloride organic HAP concentrations less than the applicable limits specified in Table 1 or 2 to this subpart, before being exposed to the atmosphere, and before being discharged from the affected source.

(b) *Initial determination of process wastewater streams that need to be treated.* You must determine which process wastewater streams require treatment as specified in paragraphs (b)(1) and (2) of this section and meet the requirements of paragraphs (c) and (d) of this section.

(1) You must collect process wastewater samples as specified in paragraphs (b)(1)(i) and (ii) of this section.

(i) For treated process wastewater streams, you must collect process wastewater samples at the outlet of the treatment process and before the process wastewater stream is mixed with any other process wastewater stream containing vinyl chloride or total non-vinyl chloride organic HAP concentrations less than the applicable limits specified in Table 1 or 2 to this subpart, before being exposed to the atmosphere, and before being discharged from the affected source.

(ii) For untreated process wastewater streams, you must collect process wastewater samples at the location immediately as the stream leaves a piece of process equipment, before being mixed with any other process stream or process wastewater stream, before being exposed to the atmosphere, and before being discharged from the affected source.

(2) You must measure the concentration of vinyl chloride and total non-vinyl chloride organic HAP using the test methods and procedures specified in § 63.11980.

(c) *Requirements for process wastewater streams that must be treated.* Each process wastewater stream that has a vinyl chloride or total non-vinyl chloride organic HAP concentration equal to or greater than the limits specified in Table 1 or 2 to this subpart, determined pursuant to paragraph (a) of this section must be treated to reduce the concentration of vinyl chloride or total non-vinyl chloride organic HAP to below the applicable limits specified in Table 1 or 2 to this subpart. You must route wastewater streams through hard-piping to the treatment process and route the vent stream from the treatment process to a closed vent system and control device meeting the requirements of §§ 63.11925 through 63.11950. You must also meet the initial and continuous compliance requirements specified in § 63.11970(a) and § 63.11975.

(d) *Requirements for process wastewater streams that do not need to be treated.* For each process wastewater stream that has a vinyl chloride or total non-vinyl chloride organic HAP concentration less than the limits specified in Table 1 or 2 to this subpart, determined pursuant to paragraph (a) of this section, you must meet the initial and continuous compliance requirements specified in §§ 63.11970(b) and 63.11975(c).

(e) *Maintenance wastewater.* You must comply with the requirements specified in § 63.105 of subpart F of this part.

(f) *Determination of total non-vinyl chloride organic HAP.* You must develop a facility-specific list of HAP that are expected to be present in each process wastewater stream at your PVCPU. This list must be continuously updated and must be available for inspection by the Administrator. This list must include the identification of each HAP expected to be present in each process wastewater stream, and the CAS number for each HAP.

(1) For the purposes of demonstrating initial and continuous compliance as required in §§ 63.11970 and 63.11975 of this subpart, you must meet the requirements specified in paragraphs (f)(1)(i) and (ii) of this section.

(i) You must analyze each process wastewater sample for all HAP listed in Table 10 to this subpart using the test methods specified in § 63.11980(a)(2) and (3).

(ii) You must also analyze each process wastewater sample for any HAP that are not listed in Table 10 to this subpart but are expected to be present in that sample based on your facility-specific list of HAP using the appropriate test method specified in § 63.11980(a)(2).

(2) [Reserved]

### § 63.11970 What are my initial compliance requirements for process wastewater?

(a) *Demonstration of initial compliance for process wastewater streams that must be treated.* For each process wastewater stream that must be treated as specified in § 63.11965(b) and (c), you must conduct an initial performance test for

the wastewater treatment process, measuring the concentration of vinyl chloride and total non-vinyl chloride organic HAP in the wastewater stream at the outlet of the wastewater treatment process before the wastewater is exposed to the atmosphere, mixed with any other process stream, and before being discharged from the affected facility, using the test method(s) and procedures specified in §63.11980(a).

(b) *Demonstration of initial compliance for process wastewater streams that are not required to be treated.* For each process wastewater stream that has a vinyl chloride or total non-vinyl chloride organic HAP concentration less than the limits specified in Tables 1 or 2 to this subpart, you must use the measurement specified in §63.11965(b)(1)(ii) to demonstrate initial compliance.

### §63.11975 What are my continuous compliance requirements for process wastewater?

(a) For each process wastewater stream that must be treated to reduce the concentration of vinyl chloride or total non-vinyl chloride organic HAP as specified in §63.11965(b) and (c), you must demonstrate continuous compliance as specified in paragraph (b) of this section. For each process wastewater stream for which you initially determine in §63.11970(b) that treatment is not required to reduce either vinyl chloride or total non-vinyl chloride organic HAP concentration, you must demonstrate continuous compliance as specified in paragraph (c) of this section.

(b) For each process wastewater stream that must be treated according to §63.11965(b), you must demonstrate continuous compliance with the emission limits for vinyl chloride and total non-vinyl chloride organic HAP specified in Table 1 or 2 to this subpart by following the procedures specified in paragraphs (b)(1) and (2) of this section.

(1) Following your demonstration of initial compliance in §63.11970(a), make monthly measurements of the vinyl chloride and total non-vinyl chloride organic HAP concentrations using the procedures and methods specified in §63.11965(b)(1) and (2).

(2) You must demonstrate continuous compliance with the emission limits in Table 1 or 2 to this subpart on a monthly basis, using the monthly concentration measurement specified in paragraph (b)(1) of this section.

(c) For each wastewater stream for which you initially determine in §63.11970(b) that treatment is not required to reduce the vinyl chloride or total non-vinyl chloride organic HAP concentration, you must demonstrate continuous compliance as specified in paragraphs (c)(1) and (2) of this section.

(1) Conduct annual performance tests, measuring the vinyl chloride and total non-vinyl chloride organic HAP concentrations using the procedures and methods specified in §63.11965(b)(1) and (2).

(2) If any annual performance test conducted as specified in paragraph (c)(1) of this section results in a concentration of vinyl chloride or total non-vinyl chloride organic HAP in the process wastewater stream that is greater than or equal to the emission limits in Table 1 or 2 to this subpart, then you must meet the requirements of §63.11965(c) and you must demonstrate initial and continuous compliance as specified in §63.11970 and this section.

### §63.11980 What are the test methods and calculation procedures for process wastewater?

(a) *Performance test methods and procedures.* You must determine the concentration of vinyl chloride and total non-vinyl chloride organic HAP using the test methods and procedures specified in paragraphs (a)(1) through (4) of this section. Upon request, the owner or operator shall make available to the Administrator such records as may be necessary to determine the conditions of performance tests.

(1) You must conduct performance tests during worst-case operating conditions for the PVCPU when the process wastewater treatment process is operating as close as possible to maximum operating conditions. If the wastewater treatment process will be operating at several different sets of operating conditions, you must supplement the testing with additional testing, modeling or engineering assessments to demonstrate compliance with the emission limits.

(2) For measuring total non-vinyl chloride organic HAP, you must conduct sampling and analysis using the methods specified in paragraphs (a)(2)(i) through (iv) of this section.

(i) SW–846–8260B (incorporated by reference, see § 63.14) for analysis of volatile organic compounds listed in Table 10 of this subpart.

(ii) SW–846–8270D (incorporated by reference, see § 63.14) for analysis of semivolatile organic compounds.

(iii) SW–846–8315A (incorporated by reference, see § 63.14) for analysis of aldehyde compounds.

(iv) SW–846–8015C (incorporated by reference, see § 63.14) for analysis of alcohol compounds.

(3) For measuring vinyl chloride, you must use Method 107 at 40 CFR part 61, appendix B.

(4) When using the methods in paragraphs (a)(2) and (3) of this section, you must meet the requirements in paragraphs (a)(4)(i) through (iii) of this section.

(i) Sample collection may consist of grab or composite samples.

(ii) Samples must be taken before the process wastewater stream is exposed to the atmosphere.

(iii) You must ensure that sample collection, preservation, transport, and analysis minimizes loss of HAP and maintains sample integrity.

(b) Method for calculating total non-vinyl chloride organic HAP concentration. For each process wastewater stream analyzed using the methods specified in paragraph (a) of this section, calculate the sum of the measured concentrations of each HAP analyzed as required in § 63.11965(f)(1) by using Equation 1 to this section.

$$C_{TNVCH} = \sum_{i=1}^{n} C_i \qquad \text{(Eq. 1)}$$

*Where:*

$C_{TNVCH}$ = Concentration of total non-vinyl chloride organic HAP, in parts per million by weight (ppmw).

$C_i$ = Concentration of individual HAP present in the sample analyzed pursuant to § 63.11965(f)(1) excluding vinyl chloride, in ppmw, where a value of zero should be used for any HAP concentration that is below the detection limit.

NOTIFICATIONS, REPORTS AND RECORDS

### § 63.11985 What notifications and reports must I submit and when?

In addition to the notifications and reports required in subpart A of this part, as specified in Table 4 to this subpart, you must submit the additional information and reports specified in paragraphs (a) through (c) of this section, as applicable.

(a) *Notification of compliance status.* When submitting the notification of compliance status required in § 63.9(h), you must also include the information specified in paragraphs (a)(1) through (9) of this section, as applicable.

(1) You must include an identification of the storage vessels subject to this subpart, including the capacity and liquid stored for each vessel. You must submit the information specified in paragraph (a)(2) of this section for each pressure vessel.

(2) You must include the information specified in § 63.1039(a) for equipment leaks.

(3) You must include an identification of the heat exchange systems that are subject to the requirements of this subpart.

(4) You must include the operating limit for each monitoring parameter identified for each control device used to meet the emission limits in Table 1 or 2 to this subpart, as determined pursuant to § 63.11935(d). This report must include the information in § 63.11935(d)(2), as applicable.

(5) You must include the records specified in paragraphs (a)(5)(i) through (iii) of this section, as applicable, for process vents.

(i) You must include the performance test records specified in § 63.11990(f)(1),

as applicable. These reports must include one complete test report for each test method used for each process vent. A complete test report must include a brief process description, sampling site description, description of sampling and analysis procedures and any modifications to standard procedures, quality assurance procedures, record of operating conditions during the test, record of preparation of standards, record of calibrations, raw data sheets for field sampling, raw data sheets for field and laboratory analyses, documentation of calculations and any other information required by the test method. For additional tests performed for the same kind of emission point using the same method, the results and any other information required in applicable sections of this subpart must be submitted, but a complete test report is not required.

(ii) You must include the information specified in paragraphs (a)(5)(ii)(A) through (C) of this section for batch process vent operations.

(A) Descriptions of worst-case operating and/or testing conditions for control devices including results of emissions profiles.

(B) Calculations used to demonstrate initial compliance according to §§63.11945 and 63.11950, including documentation of the proper operation of a process condenser(s) as specified in §63.11950(c)(2)(ii).

(C) Data and rationale used to support an engineering assessment to calculate emissions in accordance with §63.11950(i).

(iii) If you use a control device other than those listed in §63.11940 for your process vent, then you must include a description of the parameters to be monitored to ensure the control device is operated in conformance with its design and achieves the specified emission limitation; an explanation of the criteria used to select the parameter; and a description of the methods and procedures that will be used to demonstrate that the parameter indicates proper operation of the control device, the schedule for this demonstration, and a statement that you will establish an operating limit for the monitored parameter as specified in paragraph (a)(4) of this section.

(6) [Reserved]

(7) You must include the records specified in paragraphs (a)(7)(i) and (ii) of this section, as applicable, for resin strippers.

(i) You must include an identification of each resin stripper and resin type subject to the requirements of this subpart.

(ii) You must include results of the initial testing used to determine initial compliance with the stripped resin limits in Table 1 or 2 to this subpart.

(8) You must include the records specified in paragraphs (a)(8)(i) and (ii) of this section, as applicable, for process wastewater.

(i) You must include an identification of each process wastewater stream subject to the requirements of this subpart, and the results of your determination for each stream as to whether it must be treated to meet the limits of Table 1 or 2 to this subpart. You must also include a description of the treatment process to be used for each process wastewater stream that requires treatment.

(ii) You must include results of the initial sampling used to determine initial compliance with the vinyl chloride and total non-vinyl chloride organic HAP limits in Table 1 or 2 to this subpart.

(9) You must include a certification of compliance, signed by a responsible official, as applicable that states the following:

(i) ''This facility complies with the requirements in this subpart for storage vessels.''

(ii) ''This facility complies with the requirements in this subpart for equipment leaks.''

(iii) ''This facility complies with the requirements in this subpart for heat exchange systems.''

(iv) ''This facility complies with the requirements in this subpart for HAP emissions from process vents.''

(v) ''This facility complies with the requirements in this subpart for other emission sources.''

(vi) ''This facility complies with the requirements in this subpart for the stripped resin.''

(vii) ''This facility complies with the requirements in this subpart for wastewater.''

(b) *Compliance reports.* When submitting the excess emissions and continuous monitoring system performance report and summary report required in § 63.10(e)(3), you must also include the information specified in paragraphs (b)(1) through (12) of this section, as applicable. This report is referred to in this subpart as your compliance report.

(1) You must include a copy of the inspection record specified in § 63.11990(b)(2) for each storage vessel when a defect, failure, or leak is detected. You must also include a copy of the applicable information specified in § 63.1039(b)(5) through (8) of subpart UU of this part for each pressure vessel.

(2) You must include the information specified in § 63.1039(b) for equipment leaks, except for releases from pressure relief devices. For any releases from pressure relief devices, you must submit the report specified in paragraph (c)(7) of this section instead of the information specified in § 63.1039(b)(4) of subpart UU of this part.

(3) You must include the information specified in paragraphs (b)(3)(i) through (vi) of this section for heat exchange systems.

(i) The number of heat exchange systems in HAP service.

(ii) The number of heat exchange systems in HAP service found to be leaking.

(iii) A summary of the monitoring data that indicate a leak, including the number of leaks determined to be equal to or greater than the leak definition.

(iv) If applicable, the date a leak was identified, the date the source of the leak was identified and the date of repair.

(v) If applicable, a summary of each delayed repair, including the original date and reason for the delay and the date of repair, if repaired during the reporting period.

(vi) If applicable, an estimate of total VOC or vinyl chloride emissions for each delayed repair over the reporting period.

(4) You must include the records specified in paragraphs (b)(4)(i) through (iii) of this section, as applicable, for process vents, resin strippers, and wastewater.

(i) Deviations using CEMS or CPMS. For each deviation from an emission limit or operating limit where a CEMS or CPMS is being used to comply with the process vent emission limits in Table 1 or 2 to this subpart, you must include the information in paragraphs (b)(4)(i)(A) through (E) of this section.

(A) For CEMS, the 3-hour block average value calculated for any period when the value is higher than an emission limit in Table 1 or 2 to this subpart or when the value does not meet the data availability requirements defined in § 63.11890(c).

(B) For CPMS, the average value calculated for any day (based on the data averaging periods for compliance specified in Table 5 to this subpart) that does not meet your operating limit established according to § 63.11935(d) or that does not meet the data availability requirements specified in § 63.11890(c).

(C) The cause for the calculated emission level or operating parameter level to not meet the established emission limit or operating limit.

(D) For deviations caused by lack of monitoring data, the duration of periods when monitoring data were not collected.

(E) Operating logs of batch process operations for each day during which the deviation occurred, including a description of the operating scenario(s) during the deviation.

(ii) New operating scenario. Include each new operating scenario that has been operated since the time period covered by the last compliance report and has not been submitted in the notification of compliance status report or a previous compliance report. For each new operating scenario, you must provide verification that the operating conditions for any associated control or treatment device have not been exceeded and constitute proper operation for the new operating scenario. You must provide any required calculations and engineering analyses that have been performed for the new operating scenario. For the purposes of this paragraph (b)(4)(ii), a revised operating scenario for an existing process is considered to be a new operating scenario when one or more of the data elements listed in § 63.11990(e)(4) have changed.

(iii) Process changes. You must document process changes, or changes made

to any of the information submitted in the notification of compliance status report or a previous compliance report, that is not within the scope of an existing operating scenario, in the compliance report. The notification must include all of the information in paragraphs (b)(4)(iii)(A) through (C) of this section.

(A) A description of the process change.

(B) Revisions to any of the information reported in the original notification of compliance status report as provided in paragraph (a) of this section.

(C) Information required by the notification of compliance status report, as provided in paragraph (a) of this section, for changes involving the addition of processes, components, or equipment at the affected source.

(5) You must submit the applicable information specified in paragraphs (b)(5)(i) through (iii) of this section for process vents.

(i) For catalytic thermal oxidizers for which you have selected the alternative monitoring specified in § 63.11940(b)(3), results of the annual catalyst sampling and inspections required by § 63.11940(b)(3)(i) and (ii) including any subsequent corrective actions taken.

(ii) For regenerative adsorbers, results of the adsorber bed outlet volatile organic compounds concentration measurements specified in § 63.11940(d)(7).

(iii) For non-regenerative adsorbers, results of the adsorber bed outlet volatile organic compounds concentration measurements specified in § 63.11940(e)(2).

(6) You must include the records specified in § 63.11990(j) for other emission sources.

(7) For resin stripper operations, you must include results of daily vinyl chloride and monthly total non-vinyl chloride organic HAP concentration results for each resin type produced within the PVCPU that did not meet the stripped resin emission limits in Table 1 or 2 to this subpart, as applicable.

(8) You must include the information specified in paragraphs (b)(8)(i) and (ii) of this section for your wastewater streams.

(i) Results of daily vinyl chloride and monthly total non-vinyl chloride organic HAP concentration results for each process wastewater stream discharged from the affected source that did not meet the process wastewater emission limits in Tables 1 or 2 to this subpart.

(ii) If you must comply with § 63.11965, then you must include any other applicable information that is required by the reporting requirements specified in § 63.146.

(9) For closed vent systems subject to the requirements of § 63.11930, you must include the information specified in paragraphs (b)(9)(i) through (iv) of this section, as applicable.

(i) As applicable, records as specified in § 63.11930(g)(1)(i) for all times when flow was detected in the bypass line, the vent stream was diverted from the control device, or the flow indicator was not operating.

(ii) As applicable, records as specified in § 63.11930(g)(1)(ii) for all occurrences of all periods when a bypass of the system was indicated (the seal mechanism is broken, the bypass line valve position has changed, or the key for a lock-and-key type lock has been checked out, and records of any car-seal that has been broken).

(iii) Records of all times when monitoring of the system was not performed as specified in § 63.11930(d) and (e), or repairs were not performed as specified in § 63.11930(f), or records were not kept as specified in § 63.11930(g)(2).

(iv) Records of each time an alarm on a closed vent system operating in vacuum service is triggered as specified in § 63.11930(h) including the cause for the alarm and the corrective action taken.

(10) Closed vent system in vacuum service, bypass deviation, or pressure vessel closure device deviation report. If any pressure vessel closure device or closed vent system that contains a bypass has directly discharged to the atmosphere, or any closed vent system that is designed to be in vacuum service and is operating and but not in vacuum service, as specified in § 63.11910(c)(4), § 63.11930(c) or § 63.11930(h), you must submit to the Administrator the following information:

(i) The source, nature and cause of the discharge.

(ii) The date, time and duration of the discharge.

(iii) An estimate of the quantity of vinyl chloride and total HAP emitted during the discharge and the method used for determining this quantity.

(iv) The actions taken to prevent this discharge.

(v) The measures adopted to prevent future such discharges

(11) *Affirmative defense report.* If you seek to assert an affirmative defense, as provided in § 63.11895, then you must submit a written report as specified in § 63.11895(b) to demonstrate, with all necessary supporting documentation, that you have met the requirements set forth in § 63.11895(a).

(12) *Overlap with Title V reports.* Information required by this subpart, which is submitted with a Title V periodic report, does not need to be included in a subsequent compliance report required by this subpart or subpart referenced by this subpart. The Title V report must be referenced in the compliance report required by this subpart.

(c) *Other notifications and reports.* You must submit the other notification and reports, as specified in paragraphs (c)(1) through (9) of this section, as applicable.

(1) *Notification of inspection.* To provide the Administrator the opportunity to have an observer present, you must notify the Administrator at least 30 days before an inspection required by § 63.11910(a)(3). If an inspection is unplanned and you could not have known about the inspection 30 days in advance, then you must notify the Administrator at least 7 days before the inspection. Notification must be made by telephone immediately followed by written documentation demonstrating why the inspection was unplanned. Alternatively, the notification including the written documentation may be made in writing and sent so that it is received by the Administrator at least 7 days before the inspection. If a delegated state or local agency is notified, you are not required to notify the Administrator. A delegated state or local agency may waive the requirement for notification of inspections.

(2) *Batch precompliance report.* You must submit a batch precompliance report at least 6 months prior to the compliance date of this subpart that includes a description of the test conditions, data, calculations and other information used to establish operating limits according to § 63.11935(d) for all batch operations. If you use an engineering assessment as specified in § 63.11950(i), then you must also include data or other information supporting a finding that the emissions estimation equations in § 63.11950(a) through (h) are inappropriate. If the EPA disapproves the report, then you must still be in compliance with the emission limitations and work practice standards of this subpart by your compliance date. To change any of the information submitted in the report, you must notify the EPA 60 days before you implement the planned change.

(3) *Other control device reporting provisions.* If you are using a control device other than those listed in this subpart, then you must submit the information as specified in paragraphs (c)(3)(i) through (iii) of this section.

(i) A description of the proposed control device.

(ii) A description of the parameter(s) to be monitored to ensure the control device is operated in conformance with its design and achieves the performance level as specified in this subpart and an explanation of the criteria used to select the parameter(s).

(iii) The frequency and content of monitoring, recording, and reporting if monitoring and recording is not continuous, or if the compliance report information, as specified in paragraph (b)(4)(i)(A) of this section, will not contain 3-hour block average values when the monitored parameter value does not meet the established operating limit. The rationale for the proposed monitoring, recording and reporting system must be included.

(4) *Request for approval to use alternative monitoring methods.* Prior to your initial notification of compliance status, you may submit requests for approval to use alternatives to the continuous operating parameter monitoring specified in this rule, as provided for in § 63.11940(h), following the same procedure as specified in § 63.8.

The information specified in paragraphs (c)(4)(i) and (ii) of this section must be included.

(i) A description of the proposed alternative system.

(ii) Information justifying your request for an alternative method, such as the technical or economic infeasibility, or the impracticality, of the affected source using the required method.

(5) *Request for approval to monitor alternative parameters.* Prior to your initial notification of compliance status, you may submit requests for approval to monitor a different parameter than those established in §63.11935(d), following the same procedure as specified for alternative monitoring methods in §63.8. The information specified in paragraphs (c)(5)(i) through (iii) of this section must be included in the request.

(i) A description of the parameter(s) to be monitored to ensure the control technology or pollution prevention measure is operated in conformance with its design and achieves the specified emission limit and an explanation of the criteria used to select the parameter(s).

(ii) A description of the methods and procedures that will be used to demonstrate that the parameter indicates proper operation of the control device, the schedule for this demonstration, and a statement that you will establish an operating limit for the monitored parameter(s) as part of the notification of compliance status if required under this subpart, unless this information has already been submitted.

(iii) The frequency and content of monitoring, recording, and reporting, if monitoring and recording is not continuous. The rationale for the proposed monitoring, recording, and reporting system must be included.

(6) [Reserved]

(7) *Pressure relief device deviation report.* If any pressure relief device in HAP service has discharged to the atmosphere as specified in §63.11915(c), then you must submit to the Administrator within 10 days of the discharge the following information:

(i) The source, nature, and cause of the discharge.

(ii) The date, time, and duration of the discharge.

(iii) An estimate of the quantity of vinyl chloride and total HAP emitted during the discharge and the method used for determining this quantity.

(iv) The actions taken to prevent this discharge.

(v) The measures adopted to prevent future such discharges.

(8) *Commencing and ceasing operation of continuous emissions monitoring systems.* Before starting or stopping the use of CEMS you must notify the Administrator as specified in §63.11935(b)(7).

(9) *Data submittal.* (i) Within 60 days after the date of completing each performance test (see §63.2) required by this subpart, you must submit the results of performance tests electronically to the EPA's WebFIRE database by using the Compliance and Emissions Data Reporting Interface (CEDRI) that is accessed through the EPA's Central Data Exchange (CDX) (*http://www.epa.gov/cdx*). Performance test data must be submitted in the file format generated through use of the EPA's Electronic Reporting Tool (ERT) (see *http://www.epa.gov/ttn/chief/ert/ert_tool.html*). Only data collected using test methods compatible with ERT are subject to this requirement to be submitted electronically to WebFIRE. Owners or operators who claim that some of the information being submitted for performance tests is confidential business information (CBI) must submit a complete ERT file including information claimed to be CBI on a compact disk or other commonly used electronic storage media (including, but not limited to, flash drives) to the EPA. The electronic media must be clearly marked as CBI and mailed to U.S. EPA/OAPQS/CORE CBI Office, Attention: WebFIRE Administrator, MD C404–02, 4930 Old Page Rd., Durham, NC 27703. The same ERT file with the CBI omitted must be submitted to the EPA via CDX as described earlier in this paragraph. At the discretion of the delegated authority, you must also submit these reports, including the confidential business information, to the delegated authority in the format specified by the delegated authority.

(ii) Within 60 days after the date of completing each CEMS performance evaluation test (see § 63.2), you must submit the relative accuracy test audit data electronically into the EPA's CDX by using the ERT, as mentioned in paragraph (c)(9)(i) of this section. Only data collected using test methods compatible with ERT are subject to this requirement to be submitted electronically to the EPA's CDX.

(iii) All reports required by this subpart not subject to the requirements in paragraphs (c)(9)(i) and (ii) of this section must be sent to the Administrator at the appropriate address listed in § 63.13. The Administrator or the delegated authority may request a report in any form suitable for the specific case (*e.g.*, by electronic media such as Excel spreadsheet, on CD or hard copy). The Administrator retains the right to require submittal of reports subject to paragraphs (c)(9)(i) and (ii) of this section in paper format.

### § 63.11990 What records must I keep?

You must keep records as specified in paragraphs (a) through (j) of this section, as applicable.

(a) *Copies of reports*. You must keep a copy of each notification and report that you submit to comply with this subpart, including all documentation supporting any notification or report. You must also keep copies of the current versions of the site-specific performance evaluation test plan, site-specific monitoring plan, and the equipment leak detection and repair plan.

(b) *Storage vessels*. For storage vessels, you must maintain the records specified in paragraphs (b)(1) through (6) of this section.

(1) You must keep a record of the dimensions of the storage vessel, an analysis of the capacity of the storage vessel and an identification of the liquid stored.

(2) Inspection records for fixed roofs complying with § 63.11910 including the information specified in paragraphs (b)(2)(i) and (ii) of this section.

(i) Record the date of each inspection required by § 63.11910(a)(3).

(ii) For each defect detected during an inspection required by § 63.11910(a)(3), record the location of the defect, a description of the defect, the date of detection and corrective action taken to repair the defect. In the event that repair of the defect is delayed in accordance with § 63.11910(a)(4)(ii), also record the reason for the delay and the date that completion of repair of the defect is expected.

(3) [Reserved]

(4) For pressure vessels, you must keep the records specified in paragraph (c) of this section for each pressure vessel.

(5) For internal and external floating roof storage vessels, you must maintain the records required in § 63.1065 of subpart WW of this part.

(6) For fixed roof storage vessels that route emissions through a closed vent system to a control device, during periods of planned routine maintenance of a control device, record the day and time at which planned routine maintenance periods begin and end, and the type of maintenance performed on the control device. If you need more than 240 hr/yr, keep a record that explains why additional time up to 360 hr/yr was needed and describes how you minimized the amount of additional time needed.

(c) *Equipment leaks*. For equipment leaks, you must maintain the records specified in § 63.1038 of subpart UU of this part for equipment leaks and a record of the information specified in § 63.11930(g)(4) for monitoring instrument calibrations conducted according to § 63.11930(e)(2).

(d) *Heat exchange systems*. For a heat exchange system subject to this subpart, you must keep the records specified in paragraphs (d)(1) through (6) of this section.

(1) Identification of all heat exchangers at the facility and the measured or estimated average annual HAP concentration of process fluid or intervening cooling fluid processed in each heat exchanger.

(2) Identification of all heat exchange systems that are in HAP service. For each heat exchange system that is subject to this subpart, you must include identification of all heat exchangers within each heat exchange system, identification of the individual heat exchangers in HAP service within each

heat exchange system, and for closed-loop recirculation systems, the cooling tower included in each heat exchange system.

(3) Identification of all heat exchange systems that are exempt from the monitoring requirements according to the provisions in §63.11920(b) and the provision under which the heat exchange system is exempt.

(4) Results of the following monitoring data for each monitoring event:

(i) Date/time of event.

(ii) Heat exchange exit line flow or cooling tower return line flow at the sampling location, gallons/minute.

(iii) Monitoring method employed.

(iv) The measured cooling water concentration for each of target analyte (parts per billion by weight).

(v) Calibration and recovery information identified in the test method used.

(5) The date when a leak was identified and the date when the heat exchanger was repaired or taken out of service.

(6) If a repair is delayed, the reason for the delay, the schedule for completing the repair, and the estimate of potential emissions for the delay of repair.

(e) *Process vent monitoring.* You must include the records specified in paragraphs (e)(1) through (4) of this section, as applicable, for process vent monitoring.

(1) Continuous records. Where this subpart requires a continuous record using CEMS or CPMS, you must maintain, at a minimum, the records specified in §63.10(b)(2)(vii)(A).

(2) Excluded data. In any average computed to determine compliance, you must exclude monitoring data recorded during periods specified in paragraphs (e)(2)(i) through (iii) of this section.

(i) Periods of non-operation of the process unit (or portion thereof), resulting in cessation of the emissions to which the monitoring applies.

(ii) Periods of no flow to a control device.

(iii) Monitoring system malfunctions, repairs associated with monitoring system malfunctions or required monitoring system quality assurance or control activities, as specified in §63.11890(c)(2).

(3) Records of calculated emission and operating parameter values. You must retain for 5 years, a record of CEMS and CPMS data as specified in paragraphs (e)(3)(i) and (ii) of this section, unless an alternative recordkeeping system has been requested and approved.

(i) Except as specified in paragraph (e)(3)(ii) of this section, retain for 5 years, the records of the average values for each continuously monitored operating parameter and pollutant specified in §§63.11925(e)(3)(ii) and 63.11925(e)(4)(ii)(B) for CEMS and CPMS.

(ii) In lieu of calculating and recording the average value specified in paragraphs (e)(3)(i) of this section, if all 1-hour averages specified in §63.11935(e) demonstrate compliance with your parameter operating limit or the applicable pollutant emission limit in Table 1 or 2 to this subpart for the block average period, you may record a statement that all recorded 1-hour averages met the operating limit or emission limit, as applicable, and retain for 5 years this statement and all recorded CPMS or CEMS data for the block average period.

(4) Information to be included in records. You must keep records of each operating scenario as specified in paragraphs (e)(4)(i) through (viii) of this section, as applicable.

(i) You must keep a schedule or log of operating scenarios, updated each time a different operating scenario is put into effect.

(ii) A description of the process and the type of process components used.

(iii) An identification of related process vents including their associated emissions episodes.

(iv) The applicable control requirements of this subpart for process vents.

(v) The control device, including a description of operating and testing conditions.

(vi) Combined emissions that are routed to the same control device.

(vii) The applicable monitoring requirements of this subpart and any operating limit that assures compliance for all emissions routed to the control device.

(viii) Calculations and engineering analyses required to demonstrate compliance.

(f) *Process vents.* You must include the records specified in paragraphs (f)(1) and (2) of this section, as applicable, for process vents.

(1) Records of performance tests as required in § 63.10(b)(2)(viii). You must also collect the applicable control device operating parameters required in § 63.11940 over the full period of the performance test.

(2) If you use a control device to comply with this subpart and you are required to use CPMS, then you must keep up-to-date and readily accessible records for your process vents as specified in paragraphs (f)(2)(i) through (iv) of this section, as applicable.

(i) If you use a flow indicator, then you must keep records of periods of no flow to the control device, including the start and stop time and dates of periods of flow and no flow.

(ii) If you use a catalytic oxidizer for which you have selected the alternative monitoring specified in § 63.11940(b)(3), then you must also maintain records of the results of the annual catalyst sampling and inspections required by § 63.11940(b)(3)(i) and (ii) including any subsequent corrective actions taken.

(iii) If you use a regenerative adsorber as specified in § 63.11940(d), then the records specified in paragraphs (f)(2)(iii)(A) through (H) of this section, as applicable, must be kept.

(A) Records of total regeneration stream mass flow for each adsorber-bed regeneration cycle.

(B) Records of the temperature of the adsorber bed after each regeneration and within 15 minutes of completing any cooling cycle.

(C) For non-vacuum and non-steam regeneration systems, records of the temperature of the adsorber bed during each regeneration except during any temperature regulating (cooling or warming to bring bed temperature closer to vent gas temperature) portion of the regeneration cycle.

(D) If adsorber regeneration vacuum is monitored pursuant to § 63.11940(d)(4), then you must keep records of the vacuum profile over time and the amount of time the vacuum level is below the minimum vacuum target for each adsorber-bed regeneration cycle.

(E) Records of the regeneration frequency and duration.

(F) Daily records of the verification inspections, including the visual observations and/or any activation of an automated alarm or shutdown system with a written entry into a log book or other permanent form of record.

(G) Records of the maximum volatile organic compound or HAP outlet concentration observed over the last 5 minutes of the adsorption cycle for each adsorber bed. Records must be weekly or for every regeneration cycle if the regeneration cycle is greater than 1 week.

(H) Records of the date and time the adsorbent had last been replaced.

(iv) If you use a non-regenerative adsorber as specified in § 63.11940(e), then the records specified in paragraphs (f)(2)(iv)(A) through (C) of this section, as applicable, must be kept.

(A) A record of the average life of the bed, as determined by § 63.11940(e)(1), including the date the average life was determined.

(B) Daily, weekly, or monthly records of the maximum volatile organic compound or HAP outlet concentration, as specified by § 63.11940(e)(2).

(C) Records of bed replacement including the date and time the adsorbent had last been replaced, and the date and time in which breakthrough is detected.

(g) *Closed vent systems.* You must keep the records specified in paragraphs (g)(1) through (6) of this section, and you must record any additional information as specified in § 63.11930, as applicable.

(1) Each alarm triggered because flow was detected in a bypass as specified in § 63.11930(g)(1)(i).

(2) Inspections of seals or closure mechanisms as specified in § 63.11930(g)(1)(ii).

(3) Copies of compliance reports for closed vent system leak inspections as specified in § 63.11985(b)(9) and § 63.11930(g)(2) and (3).

(4) Instrument calibration records as specified in § 63.11930(g)(4).

(5) Unsafe-to-inspect equipment as specified in § 63.11930(g)(5).

(6) Pressure alarms as specified by § 63.11930(h)(2) and (3).

(h) *Resin strippers.* For resin strippers, you must maintain the records specified in paragraphs (h)(1) and (2) of this section.

(1) All resin sampling data, including daily measurements of the concentration of vinyl chloride and monthly measurements of the total non-vinyl chloride organic HAP compounds in the stripped resin for each type and grade of resin produced. Each sample must be identified by the resin type and resin grade, the date and time the sample was taken, identification of the resin stripper from which the sample was taken, and the corresponding quantity (pounds) of resin processed by the stripper for the batch or over the time period represented by the sample.

(2) The total quantity (pounds) of each resin grade produced per day and the total quantity of resin processed by each resin stripper, identified by resin type and resin grade, per day.

(i) *Process wastewater.* For treatment processes, you must maintain the records specified in paragraphs (i)(1) through (5) of this section.

(1) A description of the process wastewater generation activities and treatment process.

(2) Records of the treatment determinations specified in § 63.11965(b) for each wastewater stream and the type of treatment applied if required in § 63.11965(c).

(3) Records of the initial performance test specified in § 63.11970(a) and (b).

(4) All testing data, including monthly measurements of the concentrations of vinyl chloride and the concentration of total non-vinyl chloride organic HAP in each process wastewater stream required to be measured, as specified in § 63.11975.

(5) You must keep any other applicable records that are required by the recordkeeping requirements specified in § 63.147 of subpart G of this part.

(j) *Other emission sources.* You must keep the records specified in paragraphs (j)(1) and (2) of this section.

(1) All engineering calculations, testing, sampling, and monitoring results and data specified in § 63.11955.

(2) Each occurrence that you do not comply with the requirements in § 63.11955.

### § 63.11995 In what form and how long must I keep my records?

(a) You must keep records for 5 years in a form suitable and readily available for expeditious review, as specified in § 63.10(b)(1).

(b) You must keep each record on site for at least 2 years, as specified in § 63.10(b)(1). You can keep the records off site for the remaining 3 years. Records may be maintained in hard copy or computer-readable format including, but not limited to, on paper, microfilm, hard disk drive, floppy disk, compact disk, magnetic tape or microfiche.

### § 63.12000 Who implements and enforces this subpart?

(a) This subpart can be implemented and enforced by the Administrator, as defined in § 63.2, or a delegated authority such as your state, local or tribal agency. If the Administrator has delegated authority to your state, local or tribal agency, then that agency (as well as the Administrator) has the authority to implement and enforce this subpart. You should contact your EPA Regional Office to find out if this subpart is delegated to your state, local or tribal agency.

(b) In delegating implementation and enforcement authority of this subpart to a state, local or tribal agency, the authorities listed in paragraphs (b)(1) through (4) of this section are retained by the Administrator and are not transferred to the state, local or tribal agency, however, the EPA retains oversight of this subpart and can take enforcement actions, as appropriate.

(1) Approval of alternatives to the emission limits, operating limits, and work practice standards specified in this subpart.

(2) Approval of a major change to test methods, as defined in § 63.90, approval of any proposed analysis methods, and approval of any proposed test methods.

(3) Approval of a major change to monitoring, as defined in § 63.90.

(4) Approval of a major change to recordkeeping and reporting, as defined in § 63.90.

DEFINITIONS

### § 63.12005 What definitions apply to this subpart?

Terms used in this subpart are defined in the Clean Air Act, in § 63.2, and in this section, as follows:

*Affirmative defense* means, in the context of an enforcement proceeding, a response or defense put forward by a defendant, regarding which the defendant has the burden of proof, and the merits of which are independently and objectively evaluated in a judicial or administrative proceeding.

*Batch emission episode* means a discrete venting episode that is associated with a single unit operation. A unit operation may have more than one batch emission episode. For example, a displacement of vapor resulting from the charging of a vessel with HAP will result in a discrete emission episode that will last through the duration of the charge and will have an average flowrate equal to the rate of the charge. If the vessel is then heated, there will also be another discrete emission episode resulting from the expulsion of expanded vapor. Both emission episodes may occur in the same vessel or unit operation. There are possibly other emission episodes that may occur from the vessel or other process components, depending on process operations.

*Batch operation* means a noncontinuous operation involving intermittent or discontinuous feed into process components, and, in general, involves the emptying of the process components after the operation ceases and prior to beginning a new operation. Addition of raw material and withdrawal of product do not occur simultaneously in a batch operation.

*Batch process vent* means a vent from a batch operation from a PVCPU through which a HAP-containing gas stream has the potential to be released to the atmosphere except that it is required by this subpart to routed to a closed vent system and control device. Emissions for all emission episodes associated with the unit operation(s) are part of the batch process vent. Batch process vents also include vents with intermittent flow from continuous operations. Examples of batch process vents include, but are not limited to, vents on condensers used for product recovery, polymerization reactors, and process tanks.

*Bottoms receiver* means a tank that collects bottoms from continuous distillation before the stream is sent for storage or for further downstream processing. A rundown tank is an example of a bottoms receiver.

*Bulk process* means a process for producing polyvinyl chloride resin that is characterized by a two-step anhydrous polymerization process: the formation of small resin particles in a pre-polymerization reactor using small amounts of vinyl chloride monomer, an initiator, and agitation; and the growth of the resin particles in a post-polymerization reactor using additional vinyl chloride monomer. Resins produced using the bulk process are referred to as bulk resins.

*Bypass* means diverting a process vent or closed vent system stream to the atmosphere such that it does not first pass through an emission control device.

*Calendar year* means the period between January 1 and December 31, inclusive for a given year.

*Capacity* means the nominal figure or rating given by the manufacturer of the storage vessel, condenser, or other process component.

*Car-seal* means a seal that is placed on a device that is used to change the position of a valve (e.g., from opened to closed) in such a way that the position of the valve cannot be changed without breaking the seal.

*Closed vent system* means a system that is not open to the atmosphere and is composed of piping, ductwork, connections, and, if necessary, flow inducing devices that collect or transport gas or vapor from an emission point to a control device.

*Combustion device* means an individual unit used for the combustion of organic emissions, such as a flare, incinerator, process heater, or boiler.

*Conservation vent* means an automatically operated (*e.g.*, weight-loaded or spring-loaded) safety device used to

prevent the operating pressure of a storage vessel from exceeding the maximum allowable working pressure of the process component. Conservation vents must be designed to open only when the operating pressure of the storage vessel exceeds the maximum allowable working pressure of the process component. Conservation vents open and close to permit only the intake or outlet relief necessary to keep the storage vessel within permissible working pressures, and reseal automatically.

*Container* means a portable unit in which a material can be stored, transported, treated, disposed of or otherwise handled. Examples of containers include, but are not limited to, drums, pails, and portable cargo containers known as ''portable tanks'' or ''totes.'' Container does not include transport vehicles or barges.

*Continuous emission monitoring system (CEMS)* means the total equipment that may be required to meet the data acquisition and availability requirements of this subpart, used to sample, condition (if applicable), analyze, and provide a record of emissions.

*Continuous operation* means any operation that is not a batch operation.

*Continuous parameter monitoring system (CPMS)* means the total equipment that may be required to meet the data acquisition and availability requirements of this part, used to sample, condition (if applicable), analyze, and provide a record of process or control system parameters.

*Continuous process vent* means a vent from a continuous PVCPU operation through which a HAP-containing gas stream has the potential to be released to the atmosphere except that it is required by this subpart to routed to a closed vent system and control device and has the following characteristics:

(1) The gas stream originates as a continuous flow from any continuous PVCPU operation during operation of the PVCPU.

(2) The discharge into the closed vent system and control device meets at least one of the following conditions:

(i) Is directly from any continuous operation.

(ii) Is from any continuous operation after passing solely (*i.e.*, without passing through any other unit operation for a process purpose) through one or more recovery devices within the PVCPU.

(iii) Is from a device recovering only mechanical energy from a gas stream that comes either directly from any continuous operation, or from any continuous operation after passing solely (*i.e.*, without passing through any other unit operation for a process purpose) through one or more recovery devices within the PVCPU.

*Continuous PVCPU operation means* any operation that is not a batch operation or an operation that generates a miscellaneous process vent.

*Continuous record* means documentation, either in hard copy or computer readable form, of data values measured at least once every 15 minutes and recorded at the frequency specified in § 63.11990(e)(1).

*Control device* means, with the exceptions noted in this definition, a combustion device, recovery device, recapture device or any combination of these devices used to comply with this subpart. Process condensers are not control devices.

*Control system* means the combination of the closed vent system and the control devices used to collect and control vapors or gases from a regulated emission source.

*Cooling tower* means a heat removal device used to remove the heat absorbed in circulating cooling water systems by transferring the heat to the atmosphere using natural or mechanical draft.

*Cooling tower return line* means the main water trunk lines at the inlet to the cooling tower before exposure to the atmosphere.

*Corrective action plan* means a description of all reasonable interim and long-term measures, if any, that are available, and an explanation of why the selected corrective action is the best alternative, including, but not limited to, any consideration of cost-effectiveness.

*Day* means a calendar day, unless otherwise specified in this subpart.

*Dioxin/furans* means total tetra- through octachlorinated dibenzo-p-dioxins and dibenzofurans.

*Dispersion process* means a process for producing polyvinyl chloride resin that is characterized by the formation of the polymers in soap micelles that contain small amounts of vinyl chloride monomer. Emulsifiers are used to disperse vinyl chloride monomer in the water phase. Initiators used in the dispersion process are soluble in water. Resins produced using the dispersion process are referred to as latex or dispersion resins.

*Empty or emptying* means the partial or complete removal of stored liquid from a storage vessel. Storage vessels that contain liquid only as a result of the liquid clinging to the walls or bottoms, or resting in pools due to bottom irregularities, are considered completely empty.

*Equipment* means each pump, compressor, agitator, pressure relief device, sampling connection system, open-ended valve or line, valve, connector and instrumentation system in HAP service; and any control devices or systems used to comply with this subpart.

*Fill or filling* means the introduction of liquid into a storage vessel, but not necessarily to capacity.

*First attempt at repair*, for the purposes of this subpart, means to take action for the purpose of stopping or reducing leakage of organic material to the atmosphere, followed by monitoring as specified in § 63.11930(f) to verify whether the leak is repaired, unless the owner or operator determines by other means that the leak is not repaired.

*Fixed roof storage vessel* means a vessel with roof that is mounted (*i.e.*, permanently affixed) on a storage vessel and that does not move with fluctuations in stored liquid level.

*Flow indicator* means a device that indicates whether gas flow is, or whether the valve position would allow gas flow to be, present in a line.

*Gasholder* means a surge control vessel with a bell that is floating in a vessel filled with water that is used to store gases from the PVC production process prior to being recovered or sent to a process vent control device. The bell rises and falls as low-pressure gases enter and leave the space beneath the bell and the water provides a seal between the enclosed gas within the floating bell and the ambient air.

*Grade* means the subdivision of PVC resin that describes it as a unique resin, *i.e.*, the most exact description of a type of resin with no further subdivision. Examples include low molecular weight suspension resins and general purpose suspension resins.

*Hard-piping* means pipes or tubing that are manufactured and properly installed using good engineering judgment and an appropriate standard method published by a consensus-based standards organization if such a method exists or you may use an industry standard practice. Consensus-based standards organizations include, but are not limited to, American National Standards Institute (ANSI, 1819 L Street NW., 6th floor, Washington, DC 20036, (202) 293–8020, *http://www.ansi.org*).

*Heat exchange system* means a device or collection of devices used to transfer heat from process fluids to water without intentional direct contact of the process fluid with the water (*i.e.*, non-contact heat exchanger) and to transport and/or cool the water in a closed-loop recirculation system (cooling tower system) or a once-through system (*e.g.*, river or pond water). For closed-loop recirculation systems, the heat exchange system consists of a cooling tower, all heat exchangers that are serviced by that cooling tower and all water lines to and from the heat exchanger(s). For once-through systems, the heat exchange system consists of one or more heat exchangers servicing an individual process unit and all water lines to and from the heat exchanger(s). Intentional direct contact with process fluids results in the formation of a wastewater.

*Heat exchanger exit line* means the cooling water line from the exit of one or more heat exchangers (where cooling water leaves the heat exchangers) to either the entrance of the cooling tower return line or prior to exposure to the atmosphere or mixing with non-cooling water streams, in, as an example, a once-through cooling system, whichever occurs first.

*In HAP service* means that a process component either contains or contacts a liquid that is at least 5-percent HAP by weight or a gas that is at least 5

percent by volume HAP as determined according to the provisions of §63.180(d). For the purposes of this definition, the term ''organic HAP'' as used in §63.180(d) means HAP. The provisions of §63.180(d) also specify how to determine that a process component is not in HAP service.

*In vacuum service* means that the process component is operating at an internal pressure that is at least 5 kilopascals (kPa) (0.7 pounds per square inch absolute) below ambient pressure.

*Incinerator* means an enclosed combustion device with an enclosed fire box that is used for destroying organic compounds. Auxiliary fuel may be used to heat waste gas to combustion temperatures. Any energy recovery section present is not physically formed into one manufactured or assembled unit with the combustion section; rather, the energy recovery section is a separate section following the combustion section and the two are joined by ducts or connections carrying flue gas. This energy recovery section limitation does not apply to an energy recovery section used solely to preheat the incoming vent stream or combustion air.

*Maintenance wastewater* means wastewater generated by the draining of process fluid from components in the PVCPU into an individual drain system prior to or during maintenance activities. Maintenance wastewater can be generated during planned and unplanned shutdowns and during periods not associated with a shutdown. Examples of activities that can generate maintenance wastewaters include descaling of heat exchanger tubing bundles, hydroblasting PVCPU process components such as polymerization reactors, vessels and heat exchangers, draining of low legs and high point bleeds, draining of pumps into an individual drain system, draining of portions of the PVCPU for repair and water used to wash out process components or equipment after the process components or equipment has already been opened to the atmosphere and has met the requirements of §63.11955.

*Maximum representative operating conditions* means process operating conditions that result in the most challenging condition for the control device. The most challenging condition for the control device may include, but is not limited to, the highest or lowest HAP mass loading rate to the control device, the highest or lowest HAP mass loading rate of constituents that approach the limits of solubility for scrubbing media, the highest or lowest HAP mass loading rate of constituents that approach limits of solubility for scrubbing media.

*Maximum true vapor pressure* means the equilibrium partial pressure exerted by the total HAP in the stored or transferred liquid at the temperature equal to the highest calendar-month average of the liquid storage or transfer temperature for liquids stored or transferred above or below the ambient temperature or at the local maximum monthly average temperature as reported by the National Weather Service for liquids stored or transferred at the ambient temperature, as determined by any one of the following methods or references:

(1) In accordance with methods described in API MPMS 19.2 (incorporated by reference, see §63.14).

(2) As obtained from standard reference texts.

(3) As determined by ASTM D2879–83 or ASTM D2879–96 (incorporated by reference, see §63.14).

(4) Any other method approved by the Administrator.

*Miscellaneous vent* means gaseous emissions from samples, loading and unloading lines, slip gauges, process wastewater treatment systems and pressure relief devices that are routed through a closed vent system to a control device and that are not equipment leaks.

*Nonstandard batch* means a batch process that is operated outside of the range of operating conditions that are documented in an existing operating scenario, but is still a reasonably anticipated event. For example, a nonstandard batch occurs when additional processing or processing at different operating conditions must be conducted to produce a product that is normally produced under the conditions described by the standard batch. A nonstandard batch may be necessary as a result of a malfunction, but it is not itself a malfunction.

*Operating block* means a period of time that is equal to the time from the beginning to end of batch process operations within a process.

*Operating day* means a 24-hour period between 12 midnight and the following midnight during which PVC is produced at any time in the PVCPU. It is not necessary for PVC to be produced for the entire 24-hour period.

*Operating scenario* means, for the purposes of reporting and recordkeeping, any specific operation of a regulated process as described by reports specified in § 63.11985(b)(4)(ii) and records specified in § 63.11990(e)(4).

*Plant site* means all contiguous or adjoining property that is under common control, including properties that are separated only by a road or other public right-of-way. Common control includes properties that are owned, leased or operated by the same entity, parent entity, subsidiary or any combination thereof.

*Polymerization reactor* means any vessel in which vinyl chloride is partially or totally polymerized into polyvinyl chloride. For bulk processes, the polymerization reactor includes pre-polymerization reactors and post-polymerization reactors.

*Polyvinyl chloride* means either polyvinyl chloride homopolymer or polyvinyl chloride copolymer.

*Polyvinyl chloride and copolymers production process unit or PVCPU* means a collection of process components assembled and connected by hard-piping or duct work, used to process raw materials and to manufacture polyvinyl chloride and/or polyvinyl chloride copolymers. A PVCPU includes, but is not limited to, polymerization reactors; resin stripping operations; resin blend tanks; resin centrifuges; resin dryers; resin product separators; recovery devices; reactant and raw material charge vessels and tanks, holding tanks, mixing and weighing tanks; finished resin product storage tanks or storage silos; finished resin product loading operations; connected ducts and piping; equipment including pumps, compressors, agitators, pressure relief devices, sampling connection systems, open-ended valves or lines, valves and connectors and instrumentation systems. A PVCPU does not include chemical manufacturing process units, as defined in § 63.101, that produce vinyl chloride monomer or other raw materials used in the PVC polymerization process.

*Polyvinyl chloride copolymer* means a synthetic thermoplastic polymer that is derived from the simultaneous polymerization of vinyl chloride and another monomer such as vinyl acetate. Polyvinyl chloride copolymer is produced by different processes, including, but not limited to, suspension, dispersion/emulsion, suspension blending, and solution processes.

*Polyvinyl chloride homopolymer* means a synthetic thermoplastic polymer that is derived from the polymerization of vinyl chloride and has the general chemical structure (-H2CCHCl-)n. Polyvinyl chloride homopolymer is typically a white powder or colorless granule. Polyvinyl chloride homopolymer is produced by different processes, including (but not limited to), suspension, dispersion/emulsion, blending, and bulk processes.

*Pressure relief device* means a safety device used to prevent operating pressures from exceeding the maximum allowable working pressure of the process component. A common pressure relief device is a spring-loaded pressure relief valve.

*Pressure vessel* means a vessel that is used to store liquids or gases and is designed not to vent to the atmosphere as a result of compression of the vapor headspace in the pressure vessel during filling of the pressure vessel to its design capacity.

*Process change* means an addition to or change in a PVCPU and/or its associated process components that creates one or more emission points or changes the characteristics of an emission point such that a new or different emission limit, operating parameter limit, or work practice requirement applies to the added or changed emission points. Examples of process changes include, but are not limited to, changes in production capacity, production rate, or catalyst type, or whenever there is replacement, removal, or addition of recovery device components. For purposes of this definition, process changes do not include process upsets, changes that do not alter the process

component configuration and operating conditions, and unintentional, temporary process changes. A process change does not include moving within a range of conditions identified in the standard batch, and a nonstandard batch does not constitute a process change.

*Process component* means any unit operation or group of units operations or any part of a process or group of parts of a process that are assembled to perform a specific function (*e.g.*, polymerization reactor, dryers, etc.). Process components include equipment, as defined in this section.

*Process condenser* means a condenser whose primary purpose is to recover material as an integral part of a batch process. All condensers recovering condensate from a batch process at or above the boiling point or all condensers in line prior to a vacuum source are considered process condensers. Typically, a primary condenser or condensers in series are considered to be integral to the batch regulated process if they are capable of and normally used for the purpose of recovering chemicals for fuel value (*i.e.*, net positive heating value), use, reuse or for sale for fuel value, use or reuse. This definition does not apply to a condenser that is used to remove materials that would hinder performance of a downstream recovery device as follows:

(1) To remove water vapor that would cause icing in a downstream condenser.

(2) To remove water vapor that would negatively affect the adsorption capacity of carbon in a downstream carbon adsorber.

(3) To remove high molecular weight organic compounds or other organic compounds that would be difficult to remove during regeneration of a downstream adsorber.

*Process tank* means a tank or other vessel (*e.g.*, pressure vessel) that is used within an affected source to both: (1) Collect material discharged from a feedstock storage vessel, process tank, or other PVCPU process component, and (2) discharge the material to another process tank, process component, byproduct storage vessel, or product storage vessel.

*Process unit* means the process components assembled and connected by pipes or ducts to process raw and/or intermediate materials and to manufacture an intended product. For the purpose of this subpart, process unit includes, but is not limited to, polyvinyl chloride production process.

*Process vent* means a vent stream that is the result of the manifolding of each and all batch process vent, continuous process vent, or miscellaneous vent resulting from the affected facility into a closed vent system and into a common header that is routed to a control device. The process vent standards apply at the outlet of the control device. A process vent is either a PVC-only process vent or a PVC-combined process vent.

*Process wastewater* means wastewater that comes into direct contact with HAP or results from the production or use of any raw material, intermediate product, finished product, by-product, or waste product containing HAP, but that has not been discharged untreated as wastewater. Examples are product tank drawdown or feed tank drawdown; water formed during a chemical reaction or used as a reactant; water used to wash impurities from organic products or reactants; water used to cool or quench organic vapor streams through direct contact; water discarded from a control device; and condensed steam from jet ejector systems pulling vacuum on vessels containing organics. Gasholder seal water is not process wastewater until it is removed from the gasholder.

*Process wastewater treatment system* means a specific technique or collection of techniques that remove or destroy the organics in a process wastewater stream to comply with §§ 63.11965, 63.11970, and 63.11975.

*Product* means a polymer produced using the same monomers and varying in additives (*e.g.*, initiators, terminators, etc.); catalysts; or in the relative proportions of monomers, that is manufactured by a process unit. With respect to polymers, more than one recipe may be used to produce the same product, and there can be more than one grade of a product. Product also

means a chemical that is not a polymer, which is manufactured by a process unit. By-products, isolated intermediates, impurities, wastes, and trace contaminants are not considered products.

*PVC-combined process vent* means a process vent that originates from a PVCPU and is combined with one or more process vents originating from another source category prior to being controlled or emitted to the atmosphere.

*PVC-only process vent* means a process vent that originates from a PVCPU and is not combined with a process vent originating from another source category prior to being controlled or emitted to the atmosphere.

*Recipe* means a specific composition from among the range of possible compositions that may occur within a product, as defined in this section. A recipe is determined by the proportions of monomers and, if present, other reactants and additives that are used to make the recipe.

*Recovery device* means an individual process component capable of and normally used for the purpose of recovering chemicals for fuel value (*i.e.*, net positive heating value), use, reuse, or for sale for fuel value, use, or reuse. Examples of process components that may be recovery devices include absorbers, adsorbers, condensers, oil-water separators or organic-water separators, or organic removal devices such as decanters, strippers (*e.g.*, wastewater steam and vacuum strippers), or thin-film evaporation units. For purposes of this subpart, recovery devices are control devices.

*Repaired*, for the purposes of this subpart, means equipment that is adjusted or otherwise altered to eliminate a leak as defined in the applicable sections of this subpart; and unless otherwise specified in applicable provisions of this subpart, is inspected as specified in § 63.11930(f) to verify that emissions from the equipment are below the applicable leak definition.

*Resin stripper* means a unit that removes organic compounds from a raw polyvinyl chloride and copolymer product. In the production of a polymer, stripping is a discrete step that occurs after the polymerization reaction and before drying or other finishing operations. Examples of types of stripping include steam stripping, vacuum stripping, or other methods of devolatilization. For the purposes of this subpart, devolatilization that occurs in dryers or other finishing operations is not resin stripping. Resin stripping may occur in a polymerization reactor or in a batch or continuous stripper separate from the polymerization reactor where resin stripping occurs.

*Root cause analysis* means an assessment conducted through a process of investigation to determine the primary cause, and any other significant contributing cause(s), of a discharge of gases in excess of specified thresholds.

*Sensor* means a device that measures a physical quantity or the change in a physical quantity, such as temperature, pressure, flow rate, pH, or liquid level.

*Slip gauge* means a gauge that has a probe that moves through the gas/liquid interface in a storage vessel and indicates the level of product in the vessel by the physical state of the material the gauge discharges.

*Solution process* means a process for producing polyvinyl chloride copolymer resin that is characterized by the anhydrous formation of the polymer through precipitation. Polymerization occurs in an organic solvent in the presence of an initiator where vinyl chloride monomer and co-monomers are soluble in the solvent, but the polymer is not. The PVC copolymer is a granule suspended in the solvent, which then precipitates out of solution. Emulsifiers and suspending agents are not used in the solution process. PVC copolymer resins produced using the solution process are referred to as solution resins.

*Specific gravity monitoring device* means a unit of equipment used to monitor specific gravity and having a minimum accuracy of ±0.02 specific gravity units.

*Standard procedure* means a formal written procedure officially adopted by the plant owner or operator and available on a routine basis to those persons responsible for carrying out the procedure.

*Storage vessel* means a tank or other vessel (*e.g.*, pressure vessel) that is part of an affected source and is used to store a gaseous, liquid, or solid feedstock, byproduct, or product that contains organic HAP. Storage vessel does not include:

(1) Vessels permanently attached to motor vehicles such as trucks, railcars, barges, or ships;

(2) Process tanks;

(3) Vessels with capacities smaller than 10,040 gallons;

(4) Vessels storing organic liquids that contain organic HAP only as impurities;

(5) Bottoms receiver tanks;

(6) Surge control vessels; and

(7) Wastewater storage tanks. Wastewater storage tanks are covered under the wastewater provisions.

*Stripped resin* means the material exiting the resin stripper that contains polymerized vinyl chloride.

*Supplemental combustion air* means the air that is added to a vent stream after the vent stream leaves the unit operation. Air that is part of the vent stream as a result of the nature of the unit operation is not considered supplemental combustion air. Air required to operate combustion device burner(s) is not considered supplemental combustion air. Air required to ensure the proper operation of catalytic oxidizers, to include the intermittent addition of air upstream of the catalyst bed to maintain a minimum threshold flow rate through the catalyst bed or to avoid excessive temperatures in the catalyst bed, is not considered to be supplemental combustion air.

*Surge control vessel* means feed drums, recycle drums, and intermediate vessels used as a part of any continuous operation. Surge control vessels are used within an affected source when in-process storage, mixing, or management of flow rates or volumes is needed to introduce material into continuous operations. Surge control vessels also include gasholders.

*Suspension blending process* means a process for producing polyvinyl chloride resin that is similar to the suspension polymerization process, but employs a rate of agitation that is significantly higher than the highest range for non-blending suspension resins. The suspension blending process uses a recipe that creates extremely small resin particles, generally equal to or less than 100 microns in size, with a glassy surface and very little porosity. The suspension blending process concentrates the resins using a centrifuge that is specifically designed to handle these small particles. Polyvinyl chloride resins produced using the suspension blending process are referred to as suspension blending resins and are typically blended with dispersion resins.

*Suspension process* means a process for producing polyvinyl chloride resin that is characterized by the formation of the polymers in droplets of liquid vinyl chloride monomer or other comonomers suspended in water. The droplets are formed by agitation and the use of protective colloids or suspending agents. Initiators used in the suspension process are soluble in vinyl chloride monomer. Polyvinyl chloride resins produced using the suspension process are referred to as suspension resins.

*Table 10 HAP* means a HAP compound listed in table 10 of this subpart.

*Total non-vinyl chloride organic HAP* means, for the purposes of this subpart, the sum of the measured concentrations of each HAP, as calculated according to the procedures specified in §§ 63.11960(f) and 63.11980(b).

*Type of resin* means the broad classification of PVC homopolymer and copolymer resin referring to the basic manufacturing process for producing that resin, including, but not limited to, suspension, dispersion/emulsion, suspension blending, bulk, and solution processes.

*Unloading operations* means the transfer of organic liquids from a transport vehicle, container, or storage vessel to process components within the affected source.

*Wastewater* means process wastewater and maintenance wastewater. The following are not considered wastewater for the purposes of this subpart:

(1) Stormwater from segregated sewers;

(2) Water from fire-fighting and deluge systems, including testing of such systems;

(3) Spills;

(4) Water from safety showers;

(5) Samples of a size not greater than reasonably necessary for the method of analysis that is used;

(6) Equipment leaks;

(7) Wastewater drips from procedures such as disconnecting hoses after cleaning lines; and

(8) Noncontact cooling water.

*Wastewater stream* means a stream that contains only wastewater as defined in this section.

*Work practice standard* means any design, equipment, work practice or operational standard, or combination thereof, that is promulgated pursuant to section 112(h) of the Clean Air Act.

**§§ 63.12006–63.12099 [Reserved]**

TABLE 1 TO SUBPART HHHHHHH OF PART 63—EMISSION LIMITS AND STANDARDS FOR EXISTING AFFECTED SOURCES

| For this type of emission point . . . | And for this air pollutant . . . | And for an affected source producing this type of PVC resin . . . | You must meet this emission limit . . . |
|---|---|---|---|
| 1. PVC-only process vents[a] | a. Vinyl chloride | All resin types | 6.0 parts per million by volume (ppmv). |
| | b. Total hydrocarbons | All resin types | 9.7 ppmv measured as propane. |
| | c. Total organic HAP[b] | All resin types | 56 ppmv. |
| | d. Hydrogen chloride | All resin types | 78 ppmv. |
| | e. Dioxins/furans (toxic equivalency basis). | All resin types | 0.038 nanograms per dry standard cubic meter (ng/dscm). |
| 2. PVC-combined process vents[a]. | a. Vinyl chloride | All resin types | 1.1 ppmv. |
| | b. Total hydrocarbons | All resin types | 4.2 ppmv measured as propane. |
| | c. Total organic HAP[b] | All resin types | 9.8 ppmv. |
| | d. Hydrogen chloride | All resin types | 380 ppmv. |
| | e. Dioxins/furans (toxic equivalency basis). | All resin types | 0.051 ng/dscm. |
| 3. Stripped resin | a. Vinyl chloride | i. Bulk resin | 7.1 parts per million by weight (ppmw). |
| | | ii. Dispersion resin | 1300 ppmw. |
| | | iii. Suspension resin | 37 ppmw. |
| | | iv. Suspension blending resin | 140 ppmw. |
| | | v. Copolymer resin | 790 ppmw. |
| | b. Total non-vinyl chloride organic HAP. | i. Bulk resin | 170 ppmw. |
| | | ii. Dispersion resin | 240 ppmw. |
| | | iii. Suspension resin | 670 ppmw. |
| | | iv. Suspension blending resin | 500 ppmw. |
| | | v. Copolymer resin | 1900 ppmw. |
| 4. Process Wastewater | a. Vinyl chloride | All resin types | 6.8 ppmw. |
| | b. Total non-vinyl chloride organic HAP. | All resin types | 110 ppmw. |

[a] Emission limits at 3 percent oxygen, dry basis.
[b] Total organic HAP is alternative compliance limit for THC.

TABLE 2 TO SUBPART HHHHHHH OF PART 63—EMISSION LIMITS AND STANDARDS FOR NEW AFFECTED SOURCES

| For this type of emission point . . . | And for this air pollutant . . . | And for an affected source producing this type of PVC resin . . . | You must meet this emission limit . . . |
|---|---|---|---|
| 1. PVC-only process vents[a] | a. Vinyl chloride | All resin types | 0.56 ppmv. |
| | b. Total hydrocarbons | All resin types | 7.0 ppmv measured as propane. |
| | c. Total organic HAP[b] | All resin types | 5.5 ppmv. |
| | d. Hydrogen chloride | All resin types | 0.17 ppmv. |
| | e. Dioxins/furans (toxic equivalency basis). | All resin types | 0.038 ng/dscm. |

| For this type of emission point . . . | And for this air pollutant . . . | And for an affected source producing this type of PVC resin . . . | You must meet this emission limit . . . |
|---|---|---|---|
| 2. PVC-combined process vents[a]. | a. Vinyl chloride | All resin types | 0.56 ppmv. |
| | b. Total hydrocarbons | All resin types | 2.3 ppmv measured as propane. |
| | c. Total organic HAP[b] | All resin types | 5.5 ppmv. |
| | d. Hydrogen chloride | All resin types | 1.4 ppmv. |
| | e. Dioxins/furans (toxic equivalency basis). | All resin types | 0.034 nanograms per dry standard cubic meter (ng/dscm). |
| 3. Stripped resin | a. Vinyl chloride | i. Bulk resin | 7.1 parts per million by weight (ppmw). |
| | | ii. Dispersion resin | 480 ppmw. |
| | | iii. Suspension resin | 7.3 ppmw. |
| | | iv. Suspension blending resin | 140 ppmw. |
| | | v. Copolymer—all resin types | 790 ppmw. |
| | b. Total non-vinyl chloride organic HAP. | i. Bulk resin | 170 ppmw. |
| | | ii. Dispersion resin | 66 ppmw. |
| | | iii. Suspension resin | 15 ppmw. |
| | | iv. Suspension blending resin | 500 ppmw. |
| | | v. Copolymer resin | 1900 ppmw. |
| 4. Process Wastewater | a. Vinyl chloride | All resin types | 0.28 ppmw. |
| | b. Total non-vinyl chloride organic HAP. | All resin types | 0.018 ppmw. |

[a] Emission limits at 3 percent oxygen, dry basis.
[b] Total organic HAP is alternative compliance limit for THC.

## Table 3 to Subpart HHHHHHH of Part 63—Summary of Control Requirements for Storage Vessels at New and Existing Sources

| If the storage vessel capacity (gallons) is . . . | And the vapor pressure[a] (psia) is . . . | Then, you must use the following type of storage vessel . . . |
|---|---|---|
| ≥20,000 but <40,000 | ≥4 | Internal floating roof, external floating roof, or fixed roof vented to a closed vent system and control device achieving 95 percent reduction.[b] |
| ≥40,000 | ≥0.75 | Internal floating roof, external floating roof, or fixed roof vented to a closed vent system and control device achieving 95 percent reduction.[b] |
| Any capacity. | >11.1 | Pressure vessel.[c] |
| All other capacity and vapor pressure combinations | | Fixed roof.[d] |

[a] Maximum true vapor pressure of total HAP at storage temperature.
[b] If using a fixed roof storage vessel vented to a closed vent system and control device, you must meet the requirements in § 63.11910(a) for fixed roof storage vessels. If using an internal floating roof storage vessel or external floating roof storage vessels, you must meet the requirements in § 63.11910(b) for internal floating roof storage vessels or external floating roof storage vessels, as applicable.
[c] Meeting the requirements of § 63.11910(c) for pressure vessels.
[d] Meeting the requirements in § 63.11910(a) for fixed roof storage vessels.

## Table 4 to Subpart HHHHHHH of Part 63—Applicability of the General Provisions to Part 63

| Citation | Subject | Applies to subpart HHHHHHH | Comment |
|---|---|---|---|
| § 63.1(a)(1)–(a)(4), (a)(6), (a)(10)–(a)(12), (b)(1), (b)(3), (c)(1), (c)(2), (c)(5), (c)(6), (e). | Applicability | Yes. | |
| § 63.1(a)(5), (a)(7)–(a)(9), (b)(2), (c)(3), (c)(4), (d). | [Reserved] | No. | |
| § 63.2 | Definitions | Yes | Additional definitions are found in § 63.12005. |
| § 63.3 | Units and abbreviations | Yes. | |
| § 63.4(a)(1), (a)(2), (b), (c) | Prohibited activities and circumvention. | Yes. | |
| § 63.4(a)(3)–(a)(5) | [Reserved] | No. | |
| § 63.5(a), (b)(1), (b)(3), (b)(4), (b)(6), (d)–(f). | Preconstruction review and notification requirements. | Yes. | |
| § 63.5(b)(2), (b)(5), (c) | [Reserved] | No. | |

| Citation | Subject | Applies to subpart HHHHHHH | Comment |
|---|---|---|---|
| § 63.6(a), (b)(1)–(b)(5), (b)(7), (c)(1), (c)(2), (c)(5), (e)(1)(iii), (f)(2), (f)(3), (g), (i), (j). | Compliance with standards and maintenance requirements. | Yes | § 63.11875 specifies compliance dates. |
| § 63.6(b)(6), (c)(3), (c)(4), (d), (e)(2), (e)(3)(ii), (h)(2)(ii), (h)(3), (h)(5)(iv). | [Reserved] | No. | |
| § 63.6(e)(1)(i), (e)(1)(ii), (e)(3), (f)(1). | Startup, shutdown, and malfunction provisions. | No. See § 63.11890(b) for general duty requirement. | |
| § 63.6(h)(1), (h)(2)(i), (h)(2)(iii), (h)(4), (h)(5)(i)–(h)(5)(iii), (h)(5)(v), (h)(6)–(h)(9). | Compliance with opacity and visible emission standards. | No | Subpart HHHHHHH does not specify opacity or visible emission standards. |
| § 63.7(a)(1), (a)(2), (a)(3), (a)(4), (b)–(d), (e)(2)–(e)(4), (f), (g)(1), (g)(3), (h). | Performance testing requirements. | Yes. | |
| § 63.7(a)(2)(i)–(viii) | [Reserved] | No. | |
| § 63.7(a)(2)(ix) | Performance testing requirements. | Yes. | |
| § 63.7(e)(1) | Performance testing | No. See especially § 63.11945, 63.11960(d), 63.11980(a). | |
| § 63.7(g)(2) | [Reserved] | No.. | |
| § 63.8(a)(1), (a)(2), (a)(4), (b), (c)(1)(i), (c)(1)(ii), (c)(2)–(c)(4), (c)(6)–(c)(8). | Monitoring requirements | Yes | Except cross reference in § 63.8(c)(1)(i) to § 63.6(e)(1) is replaced with a cross-reference to § 63.11890(b). |
| § 63.8(a)(3) | [Reserved] | No. | |
| § 63.8(c)(1)(iii) | Requirement to develop SSM plan for continuous monitoring systems. | No. | |
| § 63.8(c)(5) | Continuous opacity monitoring system minimum procedures. | No | Subpart HHHHHHH does not have opacity or visible emission standards. |
| § 63.8(d) | Written procedures for continuous monitoring systems. | Yes, except for last sentence, which refers to an SSM plan. SSM plans are not required. | |
| § 63.8(e) | Continuous monitoring systems performance evaluation. | Yes. | |
| § 63.8(f) | Use of an alternative monitoring method. | Yes. | |
| § 63.8(g) | Reduction of monitoring data | Yes | Except that the minimum data collection requirements are specified in § 63.11935(e). |
| § 63.9(a), (b)(1), (b)(2), (b)(4)(i), (b)(4)(v), (b)(5), (c)–(e), (g)(1), (g)(3), (h)(1)–(h)(3), (h)(5), (h)(6), (i), (j). | Notification requirements | Yes. | |
| § 63.9(f) | Notification of opacity and visible emission observations. | No | Subpart HHHHHHH does not have opacity or visible emission standards. |
| § 63.9(g)(2) | Use of continuous opacity monitoring system data. | No | Subpart HHHHHHH does not require the use of continuous opacity monitoring system. |
| § 63.9(b)(3), (b)(4)(ii)–(iv), (h)(4). | [Reserved] | No. | |
| § 63.9(k) | Electronic reporting procedures. | Yes | Only as specified in § 63.9(j). |
| § 63.10(a), (b)(1) | Recordkeeping and reporting requirements. | Yes. | |
| § 63.10(b)(2)(i) | Recordkeeping of occurrence and duration of startups and shutdowns. | No. | |
| § 63.10(b)(2)(ii) | Recordkeeping of malfunctions. | No. See §§ 63.11895(b), 63.11985(b)(4)(i), 63.11985(b)(9) through (11), and 63.11985(c)(7). | |
| § 63.10(b)(2)(iii) | Maintenance records | Yes. | |
| § 63.10(b)(2)(iv), (b)(2)(v) | Actions taken to minimize emissions during SSM. | No. | |
| § 63.10(b)(2)(vi) | Recordkeeping for CMS malfunctions. | Yes. | |
| § 63.10(b)(2)(vii)–(x) | Other CMS requirements | Yes. | |

| Citation | Subject | Applies to subpart HHHHHHH | Comment |
|---|---|---|---|
| § 63.10(b)(2)(xi)–(xiv) | Other recordkeeping requirements. | Yes. | |
| § 63.10(b)(3) | Recordkeeping requirement for applicability determinations. | Yes. | |
| § 63.10(c)(1), (c)(5), (c)(6) | Additional recordkeeping requirements for sources with continuous monitoring systems. | Yes. | |
| § 63.10(c)(2)–(4), (c)(9) | [Reserved] | No. | |
| § 63.10(c)(7) | Additional recordkeeping requirements for CMS—identifying exceedances and excess emissions during SSM. | Yes. | |
| § 63.10(c)(8) | Additional recordkeeping requirements for CMS—identifying exceedances and excess emissions. | Yes. | |
| § 63.10(c)(10) | Recording nature and cause of malfunctions. | No. See §§ 63.11895(b), 63.11985(b)(4)(i), 63.11985(b)(9) through (11), and 63.11985(c)(7). | |
| 63.10(c)(11), (c)(12) | Recording corrective actions | No. See §§ 63.11895(b), 63.11985(b)(4)(i), 63.11985(b)(9) through (11), and 63.11985(c)(7). | |
| § 63.10(c)(13)–(14) | Records of the total process operating time during the reporting period and procedures that are part of the continuous monitoring system quality control program. | Yes. | |
| § 63.10(c)(15) | Use SSM plan | No. | |
| § 63.10(d)(1) | General reporting requirements. | Yes. | |
| § 63.10(d)(2) | Performance test results | Yes. | |
| § 63.10(d)(3) | Opacity or visible emissions observations. | No | Subpart HHHHHHH does not specify opacity or visible emission standards. |
| § 63.10(d)(4) | Progress reports | Yes. | |
| § 63.10(d)(5) | SSM reports | No. See §§ 63.11895(b), 63.11985(b)(4)(i), 63.11985(b)(9) through (11), and 63.11985(c)(7). | |
| § 63.10(e)(1) | Additional continuous monitoring system reports—general. | Yes. | |
| § 63.10(e)(2)(i) | Results of continuous monitoring system performance evaluations. | Yes. | |
| § 63.10(e)(2)(ii) | Results of continuous opacity monitoring system performance evaluations. | No | Subpart HHHHHHH does not require the use of continuous opacity monitoring system. |
| § 63.10(e)(3) | Excess emissions/continuous monitoring system performance reports. | Yes. | |
| § 63.10(e)(4) | Continuous opacity monitoring system data reports. | No | Subpart HHHHHHH does not require the use of continuous opacity monitoring system. |
| § 63.10(f) | Recordkeeping/reporting waiver. | Yes. | |
| 63.11(a) | Control device and work practice requirements—applicability. | Yes. | |
| § 63.11(b) | Flares | No | Facilities subject to subpart HHHHHHH do not use flares as control devices, as specified in § 63.11925(b). |
| § 63.11(c)–(e) | Alternative work practice for monitoring equipment for leaks. | Yes. | |

| Citation | Subject | Applies to subpart HHHHHHH | Comment |
|---|---|---|---|
| § 63.12 | State authority and delegations. | Yes | § 63.12000 identifies types of approval authority that are not delegated. |
| § 63.13 | Addresses | Yes. | |
| § 63.14 | Incorporations by reference | Yes | Subpart HHHHHHH incorporates material by reference. |
| § 63.15 | Availability of information and confidentiality. | Yes. | |
| § 63.16 | Performance track provisions | Yes. | |

[77 FR 22906, Apr. 17, 2012, as amended at 85 FR 73921, Nov. 19, 2020]

TABLE 5 TO SUBPART HHHHHHH OF PART 63—OPERATING PARAMETERS, OPERATING LIMITS AND DATA MONITORING, RECORDING AND COMPLIANCE FREQUENCIES FOR PROCESS VENTS

| For these control devices, you must monitor these operating parameters . . . | Establish the following operating limit during your initial performance test . . . | Monitor, record, and demonstrate continuous compliance using these minimum frequencies | | |
|---|---|---|---|---|
| | | Data measurement | Data recording | Data averaging period for compliance |
| **Process Vents** | | | | |
| **Any Control device** | | | | |
| Flow to/from the control device. | N/A | Continuous | N/A | Date and time of flow start and stop. |
| **Thermal Oxidizers** | | | | |
| Temperature (in fire box or downstream ductwork prior to heat exchange). | Minimum temperature | Continuous | Every 15 minutes | 3-hour block average. |
| Temperature differential across catalyst bed. | Minimum temperature differential. | Continuous | Every 15 minutes | 3-hour block average. |
| Inlet temperature to catalyst bed and catalyst condition. | Minimum inlet temperature and catalyst condition as specified in 63.11940 (b)(3). | Continuous for temperature, annual for catalyst condition. | Every 15 minutes for temperature, annual for catalyst condition. | 3-hour block average for temperature, annual for catalyst condition. |
| **Absorbers and Acid Gas Scrubbers** | | | | |
| Influent liquid flow | Minimum inlet liquid flow. | Continuous | Every 15 minutes | 3-hour block average. |
| Influent liquid flow and gas stream flow. | Minimum influent liquid flow to gas stream flow ratio. | Continuous | Every 15 minutes | 3-hour block average. |
| Pressure drop | Minimum pressure drop | Continuous | Every 15 minutes | 3-hour block average. |
| Exhaust gas temperature. | Maximum exhaust gas temperature. | Continuous | Every 15 minutes | 3-hour block average. |
| Change in specific gravity of scrubber liquid. | Minimum change in specific gravity. | Continuous | Every 15 minutes | 3-hour block average. |
| pH of effluent liquid | Minimum pH | Continuous | Every 15 minutes | 3-hour block average. |
| Causticity of effluent liquid. | Minimum causticity | Continuous | Every 15 minutes | 3-hour block average. |
| Conductivity of effluent liquid. | Minimum conductivity | Continuous | Every 15 minutes | 3-hour block average. |
| **Regenerative Adsorber** | | | | |
| Regeneration stream flow. | Minimum total flow per regeneration cycle. | Continuous | N/A | Total flow for each regeneration cycle. |
| Adsorber bed temperature. | Maximum temperature | Continuously after regeneration and within 15 minutes of completing any temperature regulation. | Every 15 minutes after regeneration and within 15 minutes of completing any temperature regulation. | 3-hour block average. |

| For these control devices, you must monitor these operating parameters . . . | Establish the following operating limit during your initial performance test . . . | Monitor, record, and demonstrate continuous compliance using these minimum frequencies | | |
|---|---|---|---|---|
| | | Data measurement | Data recording | Data averaging period for compliance |
| Adsorber bed temperature. | Minimum temperature .. | Continuously during regeneration except during any temperature regulating portion of the regeneration cycle. | N/A ..... | Average of regeneration cycle. |
| Vacuum and duratio of regeneration. | Minimum vacuum and period of time for regeneration. | Continuous ..... | N/A ..... | Average vacuum and duration of regeneration. |
| Regeneration frequency | Minimum regeneration frequency and duration. | Continuous ..... | N/A ..... | Date and time of regeneration start and stop. |
| Adsorber operation valve sequencing and cycle time. | Correct valve sequencing and minimum cycle time. | Daily ..... | Daily ..... | N/A. |
| **Non-Regenerative Adsorber** | | | | |
| Average adsorber bed life. | N/A ..... | Daily until breakthrough for 3 adsorber bed change-outs. | N/A ..... | N/A. |
| Outlet VOC concentration of the first adsorber bed in series. | Limits in Table 1 or 2 of this subpart. | Daily, except monthly (if more than 2 months bed life remaining) or weekly (if more than 2 weeks bed life remaining). | N/A ..... | Daily, weekly, or monthly. |
| **Condenser** | | | | |
| Temperature ..... | Maximum outlet temperature. | Continuous ..... | Every 15 minutes ..... | 3-hour block average. |

TABLE 6 TO SUBPART HHHHHHH OF PART 63—TOXIC EQUIVALENCY FACTORS

| Dioxin/furan congener | Toxic equivalency factor |
|---|---|
| 2,3,7,8-tetrachlorodibenzo-p-dioxin | 1 |
| 1,2,3,7,8-pentachlorodibenzo-p-dioxin | 1 |
| 1,2,3,4,7,8-hexachlorodibenzo-p-dioxin | 0.1 |
| 1,2,3,7,8,9-hexachlorodibenzo-p-dioxin | 0.1 |
| 1,2,3,6,7,8-hexachlorodibenzo-p-dioxin | 0.1 |
| 1,2,3,4,6,7,8-heptachlorodibenzo-p-dioxin | 0.01 |
| octachlorodibenzo-p-dioxin | 0.0003 |
| 2,3,7,8-tetrachlorodibenzofuran | 0.1 |
| 2,3,4,7,8-pentachlorodibenzofuran | 0.3 |
| 1,2,3,7,8-pentachlorodibenzofuran | 0.03 |
| 1,2,3,4,7,8-hexachlorodibenzofuran | 0.1 |
| 1,2,3,6,7,8-hexachlorodibenzofuran | 0.1 |
| 1,2,3,7,8,9-hexachlorodibenzofuran | 0.1 |
| 2,3,4,6,7,8-hexachlorodibenzofuran | 0.1 |
| 1,2,3,4,6,7,8-heptachlorodibenzofuran | 0.01 |
| 1,2,3,4,7,8,9-heptachlorodibenzofuran | 0.01 |
| Octachlorodibenzofuran | 0.0003 |

TABLE 7 TO SUBPART HHHHHHH OF PART 63—CALIBRATION AND ACCURACY REQUIREMENTS FOR CONTINUOUS PARAMETER MONITORING SYSTEMS

| If you monitor this parameter . . . | Then your accuracy requirements are . . . | And your inspection/calibration frequency requirements are . . . |
|---|---|---|
| 1. Temperature (non-cryogenic temperature ranges). | ±1 percent of temperature measured or 2.8 degrees Celsius (5 degrees Fahrenheit) whichever is greater. | Every 12 months. |

| If you monitor this parameter . . . | Then your accuracy requirements are . . . | And your inspection/calibration frequency requirements are . . . |
|---|---|---|
| 2. Temperature (cryogenic temperature ranges). | ±2.5 percent of temperature measured or 2.8 degrees Celsius (5 degrees Fahrenheit) whichever is greater. | Every 12 months. |
| 3. Liquid flow rate | ±2 percent of the normal range of flow | a. Every 12 months.<br>b. You must select a measurement location where swirling flow or abnormal velocity distributions due to upstream and downstream disturbances at the point of measurement do not exist. |
| 4. Gas flow rate | ±5 percent of the flow rate or 10 cubic feet per minute, whichever is greater. | a. Every 12 months.<br>b. Check all mechanical connections for leakage at least annually.<br>c. At least annually, conduct a visual inspection of all components of the flow CPMS for physical and operational integrity and all electrical connections for oxidation and galvanic corrosion if your flow CPMS is not equipped with a redundant flow sensor. |
| 5. pH or caustic strength | ±0.2 pH units | Every 8 hours of process operation check the pH or caustic strength meter's calibration on at least two points. |
| 6. Conductivity | ±5 percent of normal range | Every 12 months. |
| 7. Mass flow rate | ±5 percent of normal range | Every 12 months. |
| 8. Pressure | ±5 percent or 0.12 kilopascals (0.5 inches of water column) whichever is greater. | a. Calibration is required every 12 months.<br>b. Check all mechanical connections for leakage at least annually.<br>c. At least annually perform a visual inspection of all components for integrity, oxidation and galvanic corrosion if CPMS is not equipped with a redundant pressure sensor. |

## Table 8 to Subpart HHHHHHH of Part 63—Methods and Procedures for Conducting Performance Tests for Process Vents

| For each control device used to meet the emission limit in Table 1 or 2 to this subpart for the following pollutant . . . | You must . . . | Using . . . |
|---|---|---|
| 1. Total hydrocarbons. | a. Measure the total hydrocarbon concentration at the outlet of the final control device or in the stack. | Method 25A at 40 CFR part 60, appendix A–7. Conduct each test run for a minimum of 1 hour. |
| 2. Total organic HAP. | a. Measure the total organic HAP concentration at the outlet of the final control device or in the stack. | i. Method 18 at 40 CFR part 60, appendix A–6 and ASTM D6420–99.[a] Conduct each test run for a minimum of 1 hour.<br>ii. Method 320 at 40 CFR part 63, appendix A and ASTM D6348–03.[a] Conduct each test run for a minimum of 1 hour. |
| 3. Vinyl chloride | a. Measure the vinyl chloride concentration at the outlet of the final control device or in the stack. | Method 18 at 40 CFR part 60, appendix A–6. Conduct each test run for a minimum of 1 hour. |
| 4. Hydrogen chloride. | a. Measure hydrogen chloride concentrations at the outlet of the final control device or in the stack. | i. Method 26 at 40 CFR part 60, appendix A–8, collect 60 dry standard liters of gas per test run; or<br>ii. Method 26A at 40 CFR part 60, appendix A–8, collect 1 dry standard cubic meter of gas per test run. |

| For each control device used to meet the emission limit in Table 1 or 2 to this subpart for the following pollutant . . . | You must . . . | Using . . . |
|---|---|---|
| 5. Dioxin/furan ..... | a. Measure dioxin/furan concentrations on a toxic equivalency basis (and report total mass per isomer) at the outlet of the final control device or in the stack. | Method 23 at 40 CFR part 60, appendix A–7 and collect 5 dry standard cubic meters of gas per test run. |
| 6. Any pollutant from a continuous, batch, or combination of continuous and batch process vent(s). | a. Select sampling port locations and the number of traverse points. | Method 1 or 1A at 40 CFR part 60, appendix A–1. |
| | b. Determine gas velocity and volumetric flow rate. | Method 2, 2A, 2C, 2D, 2F, or 2G at 40 CFR part 60, appendix A–1 and A–2. |
| | c. Conduct gas molecular weight analysis and correct concentrations the specified percent oxygen in Table 1 or 2 to this subpart. | Method 3, 3A, or 3B at 40 CFR part 60, appendix A–2 using the same sampling site and time as HAP samples. |
| | d. Measure gas moisture content. | Method 4 at 40 CFR part 60, appendix A–3. |

[a] Incorporated by reference, see § 63.14.

TABLE 9 TO SUBPART HHHHHHH OF PART 63—PROCEDURES FOR CONDUCTING SAMPLING OF STRIPPED RESIN AND PROCESS WASTEWATER

| For demonstrating . . . | For the following emission points and types of processes . . . | Collect samples according to the following schedule . . . | |
|---|---|---|---|
| | | Vinyl chloride . . . | Total non-vinyl chloride organic HAP . . . |
| **Each stripped resin stream** | | | |
| 1. Initial compliance ..... | a. Continuous ..... | Every 8 hours or for each grade, whichever is more frequent during a 24 hour period. | Every 8 hours or for each grade, whichever is more frequent during a 24 hour period. |
| | b. Batch ..... | 1 grab sample for each batch produced during a 24 hour period. | 1 grab sample for each batch produced during a 24 hour period. |
| 2. Continuous compliance ..... | a. Continuous ..... | On a daily basis, 1 grab sample every 8 hours or for each grade, whichever is more frequent during a 24 hour period. | On a monthly basis, 1 grab sample every 8 hours or for each grade, whichever is more frequent during a 24 hour period. |
| | b. Batch ..... | On a daily basis, 1 grab sample for each batch produced during a 24 hour period. | On a monthly basis, 1 grab sample for each batch produced during a 24 hour period. |
| **Each process wastewater stream** | | | |
| 3. Initial compliance ..... | N/A ..... | 1 grab sample ..... | 1 grab sample. |
| 4. Continuous compliance ..... | N/A ..... | 1 grab sample per month ..... | 1 grab sample per month. |

TABLE 10 TO SUBPART HHHHHHH OF PART 63—HAP SUBJECT TO THE RESIN AND PROCESS WASTEWATER PROVISIONS AT NEW AND EXISTING SOURCES

| CAS No. | HAP | Analyte category | Test method |
|---|---|---|---|
| 107211 ..... | Ethylene glycol ..... | Alcohol ..... | SW–846–8015C.[a] |
| 67561 ..... | Methanol ..... | Alcohol ..... | SW–846–8015C.[a] |
| 75070 ..... | Acetaldehyde ..... | Aldehyde ..... | SW–846–8315A.[a] |
| 50000 ..... | Formaldehyde ..... | Aldehyde ..... | SW–846–8315A.[a] |
| 51285 ..... | 2,4-dinitrophenol ..... | SVOC ..... | SW–846–8270D.[a] |
| 98862 ..... | Acetophenone ..... | SVOC ..... | SW–846–8270D.[a] |
| 117817 ..... | Bis(2-ethylhexyl) phthalate (DEHP). | SVOC ..... | SW–846–8270D.[a] |

| CAS No. | HAP | Analyte category | Test method |
|---|---|---|---|
| 123319 | Hydroquinone | SVOC | SW–846–8270D.[a] |
| 108952 | Phenol | SVOC | SW–846–8270D.[a] |
| 79345 | 1,1,2,2-tetrachloroethane | VOC | SW–846–8260B.[a] |
| 106990 | 1,3-butadiene | VOC | SW–846–8260B.[a] |
| 540841 | 2,2,4-trimethylpentane | VOC | SW–846–8260B.[a] |
| 71432 | Benzene | VOC | SW–846–8260B.[a] |
| 108907 | Chlorobenzene | VOC | SW–846–8260B.[a] |
| 67663 | Chloroform | VOC | SW–846–8260B.[a] |
| 126998 | Chloroprene | VOC | SW–846–8260B.[a] |
| 98828 | Cumene | VOC | SW–846–8260B.[a] |
| 75003 | Ethyl chloride (Chloroethane) | VOC | SW–846–8260B.[a] |
| 100414 | Ethylbenzene | VOC | SW–846–8260B.[a] |
| 107062 | Ethylene dichloride (1,2-Dichloroethane). | VOC | SW–846–8260B.[a] |
| 75343 | Ethylidene dichloride (1,1-Dichloroethane). | VOC | SW–846–8260B.[a] |
| 74873 | Methyl chloride (Chloromethane). | VOC | SW–846–8260B.[a] |
| 75092 | Methylene chloride | VOC | SW–846–8260B.[a] |
| 110543 | n-Hexane | VOC | SW–846–8260B.[a] |
| 108883 | Toluene | VOC | SW–846–8260B.[a] |
| 71556/79005 | Trichloroethane | VOC | SW–846–8260B.[a] |
| 108054 | Vinyl acetate | VOC | SW–846–8260B.[a] |
| 593602 | Vinyl bromide | VOC | SW–846–8260B.[a] |
| 75014 | Vinyl chloride | VOC | Method 107 at 40 CFR part 61, appendix B. |
| 75354 | Vinylidene chloride (1,1-Dichloroethylene). | VOC | SW–846–8260B.[a] |
| 1330207 | Xylenes (isomers and mixtures) | VOC | SW–846–8260B.[a] |

[a] Incorporated by reference, see § 63.14.

# APPENDIX A TO PART 63—TEST METHODS

## METHOD 301—FIELD VALIDATION OF POLLUTANT MEASUREMENT METHODS FROM VARIOUS WASTE MEDIA

USING METHOD 301

*1.0 What is the purpose of Method 301?*

*2.0 What approval must I have to use Method 301?*

*3.0 What does Method 301 include?*

*4.0 How do I perform Method 301?*

REFERENCE MATERIALS

*5.0 What reference materials must I use?*

SAMPLING PROCEDURES

*6.0 What sampling procedures must I use?*

*7.0 How do I ensure sample stability?*

DETERMINATION OF BIAS AND PRECISION

*8.0 What are the requirements for bias?*

*9.0 What are the requirements for precision?*

*10.0 What calculations must I perform for isotopic spiking?*

*11.0 What calculations must I perform for comparison with a validated method?*

*12.0 What calculations must I perform for analyte spiking?*

*13.0 How do I conduct tests at similar sources?*

OPTIONAL REQUIREMENTS

*14.0 How do I use and conduct ruggedness testing?*

*15.0 How do I determine the Limit of Detection for the candidate test method?*

OTHER REQUIREMENTS AND INFORMATION

*16.0 How do I apply for approval to use a candidate test method?*

*17.0 How do I request a waiver?*

*18.0 Where can I find additional information?*

*19.0 Tables.*

### USING METHOD 301

#### *1.0 What is the purpose of Method 301?*

Method 301 provides a set of procedures for the owner or operator of an affected source to validate a candidate test method as an alternative to a required test method based on established precision and bias criteria. These validation procedures are applicable under 40 CFR part 63 or 65 when a test method is proposed as an alternative test method to meet an applicable requirement or in the absence of a validated method. Additionally, the validation procedures of Method 301 are appropriate for demonstration of the suitability of alternative test methods under 40 CFR parts 59, 60, and 61. If, under 40 CFR part 63 or 60, you choose to propose a validation method other than Method 301, you must submit and obtain the Administrator's approval for the candidate validation method.

#### *2.0 What approval must I have to use Method 301?*

If you want to use a candidate test method to meet requirements in a subpart of 40 CFR part 59, 60, 61, 63, or 65, you must also request approval to use the candidate test method according to the procedures in Section 16 of this method and the appropriate section of the part (§59.104, §59.406, §60.8(b), §61.13(h)(1)(ii), §63.7(f), or §65.158(a)(2)(iii)). You must receive the Administrator's written approval to use the candidate test method before you use the candidate test method to meet the applicable federal requirements. In some cases, the Administrator may decide to waive the requirement to use Method 301 for a candidate test method to be used to meet a requirement under 40 CFR part 59, 60, 61, 63, or 65 in absence of a validated test method. Section 17 of this method describes the requirements for obtaining a waiver.

#### *3.0 What does Method 301 include?*

3.1 *Procedures.* Method 301 includes minimum procedures to determine and document systematic error (bias) and random error (precision) of measured concentrations from exhaust gases, wastewater, sludge, and other media. Bias is established by comparing the results of sampling and analysis against a reference value. Bias may be adjusted on a source-specific basis using a correction factor and data obtained during the validation test. Precision may be determined using a paired sampling system or quadruplicate sampling system for isotopic spiking. A quadruplicate sampling system is required when establishing precision for analyte spiking or when comparing a candidate test method to a validated method. If such procedures have not been established and verified for the candidate test method, Method 301 contains procedures for ensuring sample stability by developing sample storage procedures and limitations and then testing them. Method 301 also includes procedures for ruggedness testing and determining detection limits. The procedures for ruggedness testing and determining detection limits are required for candidate test methods that are to be applied to multiple sources and optional for candidate test methods that are to be applied at a single source.

3.2 *Definitions.*

*Affected source* means an affected source as defined in the relevant part and subpart under Title 40 (*e.g.*, 40 CFR parts 59, 60, 61, 63, and 65).

*Candidate test method* means the sampling and analytical methodology selected for field validation using the procedures described in Method 301. The candidate test method may be an alternative test method under 40 CFR part 59, 60, 61, 63, or 65.

*Paired sampling system* means a sampling system capable of obtaining two replicate samples that are collected as closely as possible in sampling time and sampling location (collocated).

*Quadruplicate sampling system* means a sampling system capable of obtaining four replicate samples (*e.g.*, two pairs of measured data, one pair from each method when comparing a candidate test method against a validated test method, or analyte spiking with two spiked and two unspiked samples) that are collected as close as possible in sampling time and sampling location.

*Surrogate compound* means a compound that serves as a model for the target compound(s) being measured (*i.e.*, similar chemical structure, properties, behavior). The surrogate compound can be distinguished by the candidate test method from the compounds being analyzed.

### *4.0 How do I perform Method 301?*

First, you use a known concentration of an analyte or compare the candidate test method against a validated test method to determine the bias of the candidate test method. Then, you collect multiple, collocated simultaneous samples to determine the precision of the candidate test method. Additional procedures, including validation testing over a broad range of concentrations over an extended time period are used to expand the applicability of a candidate test method to multiple sources. Sections 5.0 through 17.0 of this method describe the procedures in detail.

## REFERENCE MATERIALS

### *5.0 What reference materials must I use?*

You must use reference materials (a material or substance with one or more properties that are sufficiently homogenous to the analyte) that are traceable to a national standards body (*e.g.*, National Institute of Standards and Technology (NIST)) at the level of the applicable emission limitation or standard that the subpart in 40 CFR part 59, 60, 61, 63, or 65 requires. If you want to expand the applicable range of the candidate test method, you must conduct additional test runs using analyte concentrations higher and lower than the applicable emission limitation or the anticipated level of the target analyte. You must obtain information about your analyte according to the procedures in Sections 5.1 through 5.4 of this method.

5.1 *Exhaust Gas Test Concentration*. You must obtain a known concentration of each analyte from an independent source such as a specialty gas manufacturer, specialty chemical company, or chemical laboratory. You must also obtain the manufacturer's certification of traceability, uncertainty, and stability for the analyte concentration.

5.2 *Tests for Other Waste Media*. You must obtain the pure liquid components of each analyte from an independent manufacturer. The manufacturer must certify the purity, traceability, uncertainty, and shelf life of the pure liquid components. You must dilute the pure liquid components in the same type medium or matrix as the waste from the affected source.

5.3 *Surrogate Analytes*. If you demonstrate to the Administrator's satisfaction that a surrogate compound behaves as the analyte does, then you may use surrogate compounds for highly toxic or reactive compounds. A surrogate may be an isotope or compound that contains a unique element (*e.g.*, chlorine) that is not present in the source or a derivation of the toxic or reactive compound if the derivative formation is part of the method's procedure. You may use laboratory experiments or literature data to show behavioral acceptability.

5.4 *Isotopically-Labeled Materials*. Isotope mixtures may contain the isotope and the natural analyte. The concentration of the isotopically-labeled analyte must be more than five times the concentration of the naturally-occurring analyte.

## SAMPLING PROCEDURES

### *6.0 What sampling procedures must I use?*

You must determine bias and precision by comparison against a validated test method using isotopic spiking or using analyte spiking (or the equivalent). Isotopic spiking can only be used with candidate test methods capable of measuring multiple isotopes simultaneously such as test methods using mass spectrometry or radiological procedures. You must collect samples according to the requirements specified in Table 301–1 of this method. You must perform the sampling according to the procedures in Sections 6.1 through 6.4 of this method.

6.1 *Isotopic Spiking*. Spike all 12 samples with isotopically-labelled analyte at an analyte mass or concentration level equivalent to the emission limitation or standard specified in the applicable regulation. If there is no applicable emission limitation or standard, spike the analyte at the expected level of the samples. Follow the applicable spiking procedures in Section 6.3 of this method.

6.2 *Analyte Spiking*. In each quadruplicate set, spike half of the samples (two out of the

four samples) with the analyte according to the applicable procedure in Section 6.3 of this method. You should spike at an analyte mass or concentration level equivalent to the emission limitation or standard specified in the applicable regulation. If there is no applicable emission limitation or standard, spike the analyte at the expected level of the samples. Follow the applicable spiking procedures in Section 6.3 of this method.

6.3 *Spiking Procedure.*

6.3.1 *Gaseous Analyte with Sorbent or Impinger Sampling Train.* Sample the analyte being spiked (in the laboratory or preferably in the field) at a mass or concentration that is approximately equivalent to the applicable emission limitation or standard (or the expected sample concentration or mass where there is no standard) for the time required by the candidate test method, and then sample the stack gas stream for an equal amount of time. The time for sampling both the analyte and stack gas stream should be equal; however, you must adjust the sampling time to avoid sorbent breakthrough. You may sample the stack gas and the gaseous analyte at the same time. You must introduce the analyte as close to the tip of the sampling probe as possible.

6.3.2 *Gaseous Analyte with Sample Container (Bag or Canister).* Spike the sample containers after completion of each test run with an analyte mass or concentration to yield a concentration approximately equivalent to the applicable emission limitation or standard (or the expected sample concentration or mass where there is no standard). Thus, the final concentration of the analyte in the sample container would be approximately equal to the analyte concentration in the stack gas plus the equivalent of the applicable emission standard (corrected for spike volume). The volume amount of spiked gas must be less than 10 percent of the sample volume of the container.

6.3.3 *Liquid or Solid Analyte with Sorbent or Impinger Trains.* Spike the sampling trains with an amount approximately equivalent to the mass or concentration in the applicable emission limitation or standard (or the expected sample concentration or mass where there is no standard) before sampling the stack gas. If possible, do the spiking in the field. If it is not possible to do the spiking in the field, you must spike the sampling trains in the laboratory.

6.3.4 *Liquid and Solid Analyte with Sample Container (Bag or Canister).* Spike the containers at the completion of each test run with an analyte mass or concentration approximately equivalent to the applicable emission limitation or standard in the subpart (or the expected sample concentration or mass where there is no standard).

6.4 *Probe Placement and Arrangement for Stationary Source Stack or Duct Sampling.* To sample a stationary source, you must place the paired or quadruplicate probes according to the procedures in this subsection. You must place the probe tips in the same horizontal plane. Section 17.1 of Method 301 describes conditions for waivers. For example, the Administrator may approve a validation request where other paired arrangements for the probe tips or pitot tubes (where required) are used.

6.4.1 *Paired Sampling Probes.* For paired sampling probes, the first probe tip should be 2.5 centimeters (cm) from the outside edge of the second probe tip, with a pitot tube on the outside of each probe.

6.4.2 *Quadruplicate Sampling Probes.* For quadruplicate sampling probes, the tips should be in a 6.0 cm × 6.0 cm square area measured from the center line of the opening of the probe tip with a single pitot tube, where required, in the center of the probe tips or two pitot tubes, where required, with their location on either side of the probe tip configuration. Section 17.1 of Method 301 describes conditions for waivers. For example, you must propose an alternative arrangement whenever the cross-sectional area of the probe tip configuration is approximately five percent or more of the stack or duct cross-sectional area.

*7.0 How do I ensure sample stability?*

7.1 *Developing Sample Storage and Threshold Procedures.* If the candidate test method includes well-established procedures supported by experimental data for sample storage and the time within which the collected samples must be analyzed, you must store the samples according to the procedures in the candidate test method and you are not required to conduct the procedures specified in Section 7.2 or 7.3 of this method. If the candidate test method does not include such procedures, your candidate method must include procedures for storing and analyzing samples to ensure sample stability. At a minimum, your proposed procedures must meet the requirements in Section 7.2 or 7.3 of this method. The minimum duration between sample collection and storage must be as soon as possible, but no longer than 72 hours after collection of the sample. The maximum storage duration must not be longer than 2 weeks.

7.2 *Storage and Sampling Procedures for Stack Test Emissions.* You must store and analyze samples of stack test emissions according to Table 301–2 of this method. You may reanalyze the same sample at both the minimum and maximum storage durations for: (1) Samples collected in containers such as bags or canisters that are not subject to dilution or other preparation steps, or (2) impinger samples not subjected to preparation steps that would affect stability of the sample such as extraction or digestion. For candidate test method samples that do not meet either of these criteria, you must analyze

one of a pair of replicate samples at the minimum storage duration and the other replicate at the proposed storage duration but no later than 2 weeks of the initial analysis to identify the effect of storage duration on analyte samples. If you are using the isotopic spiking procedure, then you must analyze each sample for the spiked analyte and the native analyte.

7.3 *Storage and Sampling Procedures for Testing Other Waste Media (e.g., Soil/Sediment, Solid Waste, Water/Liquid).* You must analyze one of each pair of replicate samples (half the total samples) at the minimum storage duration and the other replicate (other half of samples) at the maximum storage duration or within 2 weeks of the initial analysis to identify the effect of storage duration on analyte samples. The minimum time period between collection and storage should be as soon as possible, but no longer than 72 hours after collection of the sample.

7.4 *Sample Stability.* After you have conducted sampling and analysis according to Section 7.2 or 7.3 of this method, compare the results at the minimum and maximum storage durations. Calculate the difference in the results using Equation 301–1.

$$d_i = R_{mini} - R_{maxi} \qquad \text{(Eq. 301-1)}$$

Where:

$d_i$ = Difference between the results of the $i^{th}$ replicate pair of samples.

$R_{mini}$ = Results from the $i^{th}$ replicate sample pair at the minimum storage duration.

$R_{maxi}$ = Results from the $i^{th}$ replicate sample pair at the maximum storage duration.

For single samples that can be reanalyzed for sample stability assessment (*e.g.*, bag or canister samples and impinger samples that do not require digestion or extraction), the values for $R_{mini}$ and $R_{maxi}$ will be obtained from the same sample rather than replicate samples.

7.4.1 *Standard Deviation.* Determine the standard deviation of the paired samples using Equation 301–2.

$$SD_d = \sqrt{\frac{\sum_{i}^{n}(d_i - d_m)^2}{n-1}} \qquad \text{(Eq. 301-2)}$$

Where:

$SD_d$ = Standard deviation of the differences of the paired samples.

$d_i$ = Difference between the results of the $i^{th}$ replicate pair of samples.

$d_m$ = Mean of the paired sample differences.

n = Total number of paired samples.

7.4.2 *T Test.* Test the difference in the results for statistical significance by calculating the t-statistic and determining if the mean of the differences between the results at the minimum storage duration and the results after the maximum storage duration is significant at the 95 percent confidence level and n–1 degrees of freedom. Calculate the value of the t-statistic using Equation 301–3.

$$t = \frac{|d_m|}{\left(\frac{SD_d}{\sqrt{n}}\right)} \qquad \text{(Eq. 301-3)}$$

Where:

$t$ = t-statistic.

$d_m$ = The mean of the paired sample differences.

$SD_d$ = Standard deviation of the differences of the paired samples.
n = Total number of paired samples.

Compare the calculated t-statistic with the critical value of the t-statistic from Table 301–3 of this method. If the calculated t-value is less than the critical value, the difference is not statistically significant. Therefore, the sampling, analysis, and sample storage procedures ensure stability, and you may submit a request for validation of the candidate test method. If the calculated t-value is greater than the critical value, the difference is statistically significant, and you must repeat the procedures in Section 7.2 or 7.3 of this method with new samples using a shorter proposed maximum storage duration or improved handling and storage procedures.

DETERMINATION OF BIAS AND PRECISION

*8.0 What are the requirements for bias?*

You must determine bias by comparing the results of sampling and analysis using the candidate test method against a reference value. The bias must be no more than ±10 percent for the candidate test method to be considered for application to multiple sources. A candidate test method with a bias greater than ±10 percent and less than or equal to ±30 percent can only be applied on a source-specific basis at the facility at which the validation testing was conducted. In this case, you must use a correction factor for all data collected in the future using the candidate test method. If the bias is more than ±30 percent, the candidate test method is unacceptable.

*9.0 What are the requirements for precision?*

You may use a paired sampling system or a quadruplicate sampling system to establish precision for isotopic spiking. You must use a quadruplicate sampling system to establish precision for analyte spiking or when comparing a candidate test method to a validated method. If you are using analyte spiking or isotopic spiking, the precision, expressed as the relative standard deviation (RSD) of the candidate test method, must be less than or equal to 20 percent. If you are comparing the candidate test method to a validated test method, the candidate test method must be at least as precise as the validated method as determined by an F test (see Section 11.2.2 of this method).

*10.0 What calculations must I perform for isotopic spiking?*

You must analyze the bias, RSD, precision, and data acceptance for isotopic spiking tests according to the provisions in Sections 10.1 through 10.4 of this method.

10.1 *Numerical Bias.* Calculate the numerical value of the bias using the results from the analysis of the isotopic spike in the field samples and the calculated value of the spike according to Equation 301–4.

$$B = S_m - CS \qquad \text{(Eq. 301-4)}$$

Where:

B = Bias at the spike level.
$S_m$ = Mean of the measured values of the isotopically-labeled analyte in the samples.
CS = Calculated value of the isotopically-labeled spike level.

10.2 *Standard Deviation.* Calculate the standard deviation of the $S_i$ values according to Equation 301–5.

$$SD = \sqrt{\frac{\sum_{i}^{n} (S_i - S_m)^2}{(n-1)}} \qquad \text{(Eq. 301-5)}$$

Where:

SD = Standard deviation of the candidate test method.
$S_i$ = Measured value of the isotopically-labeled analyte in the $i^{th}$ field sample.
$S_m$ = Mean of the measured values of the isotopically-labeled analyte in the samples.
n = Number of isotopically-spiked samples.

10.3 *T Test*. Test the bias for statistical significance by calculating the t-statistic using Equation 301–6. Use the standard deviation determined in Section 10.2 of this method and the numerical bias determined in Section 10.1 of this method.

$$t = \frac{|B|}{\left(\frac{SD}{\sqrt{n}}\right)} \qquad \text{(Eq. 301-6)}$$

Where:

t = Calculated t-statistic.
B = Bias at the spike level.
SD = Standard deviation of the candidate test method.
n = Number of isotopically spike samples.

Compare the calculated t-value with the critical value of the two-sided t-distribution at the 95 percent confidence level and n–1 degrees of freedom (see Table 301–3 of this method). When you conduct isotopic spiking according to the procedures specified in Sections 6.1 and 6.3 of this method as required, this critical value is 2.201 for 11 degrees of freedom. If the calculated t-value is less than or equal to the critical value, the bias is not statistically significant, and the bias of the candidate test method is acceptable. If the calculated t-value is greater than the critical value, the bias is statistically significant, and you must evaluate the relative magnitude of the bias using Equation 301–7.

$$B_R = \left|\frac{B}{CS}\right| x100\% \qquad \text{(Eq. 301-7)}$$

Where:

$B_R$ = Relative bias.
B = Bias at the spike level.
CS = Calculated value of the spike level.

If the relative bias is less than or equal to 10 percent, the bias of the candidate test method is acceptable for use at multiple sources. If the relative bias is greater than 10 percent but less than or equal to 30 percent, and if you correct all data collected with the candidate test method in the future for bias using the source-specific correction factor determined in Equation 301–8, the candidate test method is acceptable only for application to the source at which the validation testing was conducted and may not be applied to any other sites. If either of the preceding two cases applies, you may continue to evaluate the candidate test method by calculating its precision. If not, the candidate test method does not meet the requirements of Method 301.

$$CF = \left(\frac{1}{1 + \frac{B}{CS}}\right) \qquad \text{(Eq. 301-8)}$$

Where:

CF = Source-specific bias correction factor.
B = Bias at the spike level.
CS = Calculated value of the spike level.

If the CF is outside the range of 0.70 to 1.30, the data and method are considered unacceptable.

10.4 *Precision*. Calculate the RSD according to Equation 301–9.

$$RSD = \left(\frac{SD}{S_m}\right) \times 100 \qquad \text{(Eq. 301-9)}$$

Where:

RSD = Relative standard deviation of the candidate test method.

SD = Standard deviation of the candidate test method calculated in Equation 301–5.

$S_m$ = Mean of the measured values of the spike samples.

The data and candidate test method are unacceptable if the RSD is greater than 20 percent.

*11.0 What calculations must I perform for comparison with a validated method?*

If you are comparing a candidate test method to a validated method, then you must analyze the data according to the provisions in this section. If the data from the candidate test method fail either the bias or precision test, the data and the candidate test method are unacceptable. If the Administrator determines that the affected source has highly variable emission rates, the Administrator may require additional precision checks.

11.1 *Bias Analysis.* Test the bias for statistical significance at the 95 percent confidence level by calculating the t-statistic.

11.1.1 *Bias.* Determine the bias, which is defined as the mean of the differences between the candidate test method and the validated method ($d_m$). Calculate $d_i$ according to Equation 301–10.

$$d_i = \frac{(V_{1i} + V_{2i})}{2} - \frac{(P_{1i} + P_{2i})}{2} \qquad \text{(Eq. 301-10)}$$

Where:

$d_i$ = Difference in measured value between the candidate test method and the validated method for each quadruplicate sampling train.

$V_{1i}$ = First measured value with the validated method in the ith quadruplicate sampling train.

$V_{2i}$ = Second measured value with the validated method in the ith quadruplicate sampling train.

$P_{1i}$ = First measured value with the candidate test method in the ith quadruplicate sampling train.

$P_{2i}$ = Second measured value with the candidate test method in the ith quadruplicate sampling train.

Calculate the numerical value of the bias using Equation 301–11.

$$B = \frac{\sum_{i}^{n} d_i}{n} \qquad \text{(Eq. 301-11)}$$

Where:

B = Numerical bias.

$d_i$ = Difference between the candidate test method and the validated method for the ith quadruplicate sampling train.

n = Number of quadruplicate sampling trains.

11.1.2 *Standard Deviation of the Differences.* Calculate the standard deviation of the differences, $SD_d$, using Equation 301–12.

$$SD_d = \sqrt{\frac{\sum_{i}^{n}(d_i - d_m)^2}{(n-1)}} \quad \text{(Eq. 301-12)}$$

Where:

$SD_d$ = Standard deviation of the differences between the candidate test method and the validated method.

$d_i$ = Difference in measured value between the candidate test method and the validated method for each quadruplicate sampling train.

$d_m$ = Mean of the differences, $d_i$, between the candidate test method and the validated method.

n = Number of quadruplicate sampling trains.

11.1.3 *T Test*. Calculate the t-statistic using Equation 301–13.

$$t = \frac{|d_m|}{\left(\frac{SD_d}{\sqrt{n}}\right)} \quad \text{(Eq. 301-13)}$$

Where:

$t$ = Calculated t-statistic.

$d_m$ = The mean of the differences, $d_i$, between the candidate test method and the validated method.

$SD_d$ = Standard deviation of the differences between the candidate test method and the validated method.

n = Number of quadruplicate sampling trains.

For the procedure comparing a candidate test method to a validated test method listed in Table 301–1 of this method, n equals six. Compare the calculated t-statistic with the critical value of the t-statistic, and determine if the bias is significant at the 95 percent confidence level (see Table 301–3 of this method). When six runs are conducted, as specified in Table 301–1 of this method, the critical value of the t-statistic is 2.571 for five degrees of freedom. If the calculated t-value is less than or equal to the critical value, the bias is not statistically significant and the data are acceptable. If the calculated t-value is greater than the critical value, the bias is statistically significant, and you must evaluate the magnitude of the relative bias using Equation 301–14.

$$B_R = \left|\frac{B}{VS}\right| \times 100\% \quad \text{(Eq. 301-14)}$$

Where:

$B_R$ = Relative bias.

B = Bias as calculated in Equation 301–11.

VS = Mean of measured values from the validated method.

If the relative bias is less than or equal to 10 percent, the bias of the candidate test method is acceptable. On a source-specific basis, if the relative bias is greater than 10 percent but less than or equal to 30 percent, and if you correct all data collected in the future with the candidate test method for the bias using the correction factor, CF, determined in Equation 301–8 (using VS for CS), the bias of the candidate test method is acceptable for application to the source at which the validation testing was conducted. If either of the preceding two cases applies, you may continue to evaluate the candidate test method by calculating its precision. If not, the candidate test method does not meet the requirements of Method 301.

11.2 *Precision*. Compare the estimated variance (or standard deviation) of the candidate test method to that of the validated test method according to Sections 11.2.1 and 11.2.2 of this method. If a significant difference is determined using the F test, the

candidate test method and the results are rejected. If the F test does not show a significant difference, then the candidate test method has acceptable precision.

11.2.1 *Candidate Test Method Variance*. Calculate the estimated variance of the candidate test method according to Equation 301–15.

$$S_p^2 = \frac{\sum_i^n d_i^2}{2n} \qquad \text{(Eq. 301-15)}$$

Where:

P = Estimated variance of the candidate test method.

$d_i$ = The difference between the $i^{th}$ pair of samples collected with the candidate test method in a single quadruplicate train.

n = Total number of paired samples (quadruplicate trains).

Calculate the estimated variance of the validated test method according to Equation 301–16.

$$S_v^2 = \frac{\sum_i^n d_i^2}{2n} \qquad \text{(Eq. 301-16)}$$

Where:

V = Estimated variance of the validated test method.

$d_i$ = The difference between the $i^{th}$ pair of samples collected with the validated test method in a single quadruplicate train.

n = Total number of paired samples (quadruplicate trains).

11.2.2 *The F test*. Determine if the estimated variance of the candidate test method is greater than that of the validated method by calculating the F-value using Equation 301–17.

$$F = \frac{S_p^2}{S_v^2} \qquad \text{(Eq. 301-17)}$$

Where:

F = Calculated F value.

P = The estimated variance of the candidate test method.

V = The estimated variance of the validated method.

Compare the calculated F value with the one-sided confidence level for F from Table 301–4 of this method. The upper one-sided confidence level of 95 percent for $F_{(6,6)}$ is 4.28 when the procedure specified in Table 301–1 of this method for quadruplicate sampling trains is followed. If the calculated F value is greater than the critical F value, the difference in precision is significant, and the data and the candidate test method are unacceptable.

*12.0 What calculations must I perform for analyte spiking?*

You must analyze the data for analyte spike testing according to this section.

12.1 *Bias Analysis*. Test the bias for statistical significance at the 95 percent confidence level by calculating the t-statistic.

12.1.1 *Bias*. Determine the bias, which is defined as the mean of the differences between the spiked samples and the unspiked samples in each quadruplicate sampling train minus the spiked amount, using Equation 301–18.

$$d_i = \frac{(S_{1i} + S_{2i})}{2} - \frac{(M_{1i} + M_{2i})}{2} - CS \qquad \text{(Eq. 301-18)}$$

Where:

$d_i$ = Difference between the spiked samples and unspiked samples in each quadruplicate sampling train minus the spiked amount.

$S_{1i}$ = Measured value of the first spiked sample in the $i^{th}$ quadruplicate sampling train.

$S_{2i}$ = Measured value of the second spiked sample in the $i^{th}$ quadruplicate sampling train.

$M_{1i}$ = Measured value of the first unspiked sample in the $i^{th}$ quadruplicate sampling train.

$M_{2i}$ = Measured value of the second unspiked sample in the $i^{th}$ quadruplicate sampling train.

CS = Calculated value of the spike level.

Calculate the numerical value of the bias using Equation 301–19.

$$B = \frac{\sum_{i}^{n} d_i}{n} \qquad \text{(Eq. 301-19)}$$

Where:

B = Numerical value of the bias.

$d_i$ = Difference between the spiked samples and unspiked samples in each quadruplicate sampling train minus the spiked amount.

n = Number of quadruplicate sampling trains.

12.1.2 *Standard Deviation of the Differences.* Calculate the standard deviation of the differences using Equation 301–20.

$$SD_d = \sqrt{\frac{\sum_{i}^{n} (d_i - d_m)^2}{n-1}} \qquad \text{(Eq. 301-20)}$$

Where:

$SD_d$ = Standard deviation of the differences of paired samples.

$d_i$ = Difference between the spiked samples and unspiked samples in each quadruplicate sampling train minus the spiked amount.

$d_m$ = The mean of the differences, $d_i$, between the spiked samples and unspiked samples.

n = Total number of quadruplicate sampling trains.

12.1.3 *T Test.* Calculate the t-statistic using Equation 301–21, where n is the total number of test sample differences ($d_i$). For the quadruplicate sampling system procedure in Table 301–1 of this method, n equals six.

$$t = \frac{|d_m|}{\left(\frac{SD_d}{\sqrt{n}}\right)} \qquad \text{(Eq. 301-21)}$$

Where:

t = Calculated t-statistic.

$d_m$ = Mean of the difference, $d_i$, between the spiked samples and unspiked samples.

$SD_d$ = Standard deviation of the differences of paired samples.

n = Number of quadruplicate sampling trains.

Compare the calculated t-statistic with the critical value of the t-statistic, and determine if the bias is significant at the 95 percent confidence level. When six quadruplicate runs are conducted, as specified in Table 301–1 of this method, the 2-sided confidence level critical value is 2.571 for the five degrees of freedom. If the calculated t-value is less than the critical value, the bias is not statistically significant and the data are acceptable. If the calculated t-value is greater than the critical value, the bias is statistically significant and you must evaluate the magnitude of the relative bias using Equation 301–22.

$$B_R = \left|\frac{B}{CS}\right| x\,100\% \qquad \text{(Eq. 301-22)}$$

Where:

$B_R$ = Relative bias.

B = Bias at the spike level from Equation 301–19.

CS = Calculated value at the spike level.

If the relative bias is less than or equal to 10 percent, the bias of the candidate test method is acceptable. On a source-specific basis, if the relative bias is greater than 10 percent but less than or equal to 30 percent, and if you correct all data collected with the candidate test method in the future for the magnitude of the bias using Equation 301–8, the bias of the candidate test method is acceptable for application to the tested source at which the validation testing was conducted. Proceed to evaluate precision of the candidate test method.

12.2 *Precision*. Calculate the standard deviation using Equation 301–23.

$$SD = \sqrt{\frac{\sum_{i}^{n}(S_i - S_m)^2}{(n-1)}} \qquad \text{(Eq. 301-23)}$$

Where:

SD = Standard deviation of the candidate test method.

$S_i$ = Measured value of the analyte in the $i^{th}$ spiked sample.

$S_m$ = Mean of the measured values of the analyte in all the spiked samples.

n = Number of spiked samples.

Calculate the RSD of the candidate test method using Equation 301–9, where SD and $S_m$ are the values from Equation 301–23. The data and candidate test method are unacceptable if the RSD is greater than 20 percent.

### *13.0 How do I conduct tests at similar sources?*

If the Administrator has approved the use of an alternative test method to a test method required in 40 CFR part 59, 60, 61, 63, or 65 for an affected source, and you would like to apply the alternative test method to a similar source, then you must petition the Administrator as described in Section 17.1.1 of this method.

## OPTIONAL REQUIREMENTS

### *14.0 How do I use and conduct ruggedness testing?*

Ruggedness testing is an optional requirement for validation of a candidate test method that is intended for the source where the validation testing was conducted. Ruggedness testing is required for validation of a candidate test method intended to be used at multiple sources. If you want to use a validated test method at a concentration that is different from the concentration in the applicable emission limitation under 40 CFR part 59, 60, 61, 63, or 65, or for a source category that is different from the source category that the test method specifies, then you must conduct ruggedness testing according to the procedures in Reference 18.16 of

Section 18.0 of this method and submit a request for a waiver for conducting Method 301 at that different source category according to Section 17.1.1 of this method.

Ruggedness testing is a study that can be conducted in the laboratory or the field to determine the sensitivity of a method to parameters such as analyte concentration, sample collection rate, interferent concentration, collection medium temperature, and sample recovery temperature. You conduct ruggedness testing by changing several variables simultaneously instead of changing one variable at a time. For example, you can determine the effect of seven variables in only eight experiments. (W.J. Youden, Statistical Manual of the Association of Official Analytical Chemists, Association of Official Analytical Chemists, Washington, DC, 1975, pp. 33–36).

### *15.0 How do I determine the Limit of Detection for the candidate test method?*

Determination of the Limit of Detection (LOD) as specified in Sections 15.1 and 15.2 of this method is required for source-specific method validation and validation of a candidate test method intended to be used for multiple sources.

15.1 *Limit of Detection.* The LOD is the minimum concentration of a substance that can be measured and reported with 99 percent confidence that the analyte concentration is greater than zero. For this protocol, the LOD is defined as three times the standard deviation, $S_o$, at the blank level.

15.2 *Purpose.* The LOD establishes the lower detection limit of the candidate test method. You must calculate the LOD using the applicable procedures found in Table 301–5 of this method. For candidate test methods that collect the analyte in a sample matrix prior to an analytical measurement, you must determine the LOD using Procedure I in Table 301–5 of this method by calculating a method detection limit (MDL) as described in 40 CFR part 136, appendix B. For the purposes of this section, the LOD is equivalent to the calculated MDL. For radiochemical methods, use the Multi-Agency Radiological Laboratory Analytical Protocols (MARLAP) Manual (*i.e.,* use the minimum detectable concentration (MDC) and not the LOD) available at *https://www.epa.gov/radiation/marlap-manual-and-supporting-documents.*

## OTHER REQUIREMENTS AND INFORMATION

### *16.0 How do I apply for approval to use a candidate test method?*

16.1 *Submitting Requests.* You must request to use a candidate test method according to the procedures in §63.7(f) or similar sections of 40 CFR parts 59, 60, 61, and 65 (§59.104, §59.406, §60.8(b), §61.13(h)(1)(ii), or §65.158(a)(2)(iii)). You cannot use a candidate test method to meet any requirement under these parts until the Administrator has approved your request. The request must include a field validation report containing the information in Section 16.2 of this method. You must submit the request to the Group Leader, Measurement Technology Group, U.S. Environmental Protection Agency, E143–02, Research Triangle Park, NC 27711.

16.2 *Field Validation Report.* The field validation report must contain the information in Sections 16.2.1 through 16.2.8 of this method.

16.2.1 *Regulatory objectives for the testing, including a description of the reasons for the test, applicable emission limits, and a description of the source.*

16.2.2 *Summary of the results and calculations shown in Sections 6.0 through 16.0 of this method, as applicable.*

16.2.3 *Reference material certification and value(s).*

16.2.4 *Discussion of laboratory evaluations.*

16.2.5 *Discussion of field sampling.*

16.2.6 *Discussion of sample preparation and analysis.*

16.2.7 *Storage times of samples (and extracts, if applicable).*

16.2.8 *Reasons for eliminating any results.*

### *17.0 How do I request a waiver?*

17.1 *Conditions for Waivers.* If you meet one of the criteria in Section 17.1.1 or 17.1.2 of this method, the Administrator may waive the requirement to use the procedures in this method to validate an alternative or other candidate test method. In addition, if the EPA currently recognizes an appropriate test method or considers the candidate test method to be satisfactory for a particular source, the Administrator may waive the use of this protocol or may specify a less rigorous validation procedure.

17.1.1 *Similar Sources.* If the alternative or other candidate test method that you want to use was validated for source-specific application at another source and you can demonstrate to the Administrator's satisfaction that your affected source is similar to that validated source, then the Administrator may waive the requirement for you to validate the alternative or other candidate test method. One procedure you may use to demonstrate the applicability of the method to your affected source is to conduct a ruggedness test as described in Section 14.0 of this method.

17.1.2 *Documented Methods.* If the bias, precision, LOD, or ruggedness of the alternative or other candidate test method that you are proposing have been demonstrated through laboratory tests or protocols different from this method, and you can demonstrate to the Administrator's satisfaction that the bias, precision, LOD, or ruggedness apply to your application, then the Administrator may waive the requirement to use this method or to use part of this method.

17.2 *Submitting Applications for Waivers.* You must sign and submit each request for a waiver from the requirements in this method in writing. The request must be submitted to the Group Leader, Measurement Technology Group, U.S. Environmental Protection Agency, E143–02, Research Triangle Park, NC 27711.

17.3 *Information Application for Waiver.* The request for a waiver must contain a thorough description of the candidate test method, the intended application, and results of any validation or other supporting documents. The request for a waiver must contain, at a minimum, the information in Sections 17.3.1 through 17.3.4 of this method. The Administrator may request additional information if necessary to determine whether this method can be waived for a particular application.

17.3.1 *A Clearly Written Test Method.* The candidate test method should be written preferably in the format of 40 CFR part 60, appendix A, Test Methods. Additionally, the candidate test must include an applicability statement, concentration range, precision, bias (accuracy), and minimum and maximum storage durations in which samples must be analyzed.

17.3.2 *Summaries of Previous Validation Tests or Other Supporting Documents.* If you use a different procedure from that described in this method, you must submit documents substantiating the bias and precision values to the Administrator's satisfaction.

17.3.3 *Ruggedness Testing Results.* You must submit results of ruggedness testing conducted according to Section 14.0 of this method, sample stability conducted according to Section 7.0 of this method, and detection limits conducted according to Section 15.0 of this method, as applicable. For example, you would not need to submit ruggedness testing results if you will be using the method at the same affected source and level at which it was validated.

17.3.4 *Applicability Statement and Basis for Waiver Approval.* Discussion of the applicability statement and basis for approval of the waiver. This discussion should address as applicable the following: applicable regulation, emission standards, effluent characteristics, and process operations.

*18.0 Where can I find additional information?*

You can find additional information in the references in Sections 18.1 through 18.18 of this method.

18.1 Albritton, J.R., G.B. Howe, S.B. Tompkins, R.K.M. Jayanty, and C.E. Decker. 1989. Stability of Parts-Per-Million Organic Cylinder Gases and Results of Source Test Analysis Audits, Status Report No. 11. Environmental Protection Agency Contract 68–02–4125. Research Triangle Institute, Research Triangle Park, NC. September.

18.2 ASTM Standard E 1169–89 (current version), ''Standard Guide for Conducting Ruggedness Tests,'' available from ASTM, 100 Barr Harbor Drive, West Conshohoken, PA 19428.

18.3 DeWees, W.G., P.M. Grohse, K.K. Luk, and F.E. Butler. 1989. Laboratory and Field Evaluation of a Methodology for Speciating Nickel Emissions from Stationary Sources. EPA Contract 68–02–4442. Prepared for Atmospheric Research and Environmental Assessment Laboratory, Office of Research and Development, U.S. Environmental Protection Agency, Research Triangle Park, NC 27711. January.

18.4 International Conference on Harmonization of Technical Requirements for the Registration of Pharmaceuticals for Human Use, ICH–Q2A, ''Text on Validation of Analytical Procedures,'' 60 FR 11260 (March 1995).

18.5 International Conference on Harmonization of Technical Requirements for the Registration of Pharmaceuticals for Human Use, ICH–Q2b, ''Validation of Analytical Procedures: Methodology,'' 62 FR 27464 (May 1997).

18.6 Keith, L.H., W. Crummer, J. Deegan Jr., R.A. Libby, J.K. Taylor, and G. Wentler. 1983. Principles of Environmental Analysis. American Chemical Society, Washington, DC.

18.7 Maxwell, E.A. 1974. Estimating variances from one or two measurements on each sample. Amer. Statistician 28:96–97.

18.8 Midgett, M.R. 1977. How EPA Validates NSPS Methodology. Environ. Sci. & Technol. 11(7):655–659.

18.9 Mitchell, W.J., and M.R. Midgett. 1976. Means to evaluate performance of stationary source test methods. Environ. Sci. & Technol. 10:85–88.

18.10 Plackett, R.L., and J.P. Burman. 1946. The design of optimum multifactorial experiments. Biometrika, 33:305.

18.11 Taylor, J.K. 1987. Quality Assurance of Chemical Measurements. Lewis Publishers, Inc., pp. 79–81.

18.12 U.S. Environmental Protection Agency. 1978. Quality Assurance Handbook for Air Pollution Measurement Systems: Volume III. Stationary Source Specific Methods. Publication No. EPA–600/4–77–027b. Office of Research and Development Publications, 26 West St. Clair St., Cincinnati, OH 45268.

18.13 U.S. Environmental Protection Agency. 1981. A Procedure for Establishing Traceability of Gas Mixtures to Certain National Bureau of Standards Standard Reference Materials. Publication No. EPA–600/7–81–010. Available from the U.S.

EPA, Quality Assurance Division (MD–77), Research Triangle Park, NC 27711.

18.14 U.S. Environmental Protection Agency. 1991. Protocol for The Field Validation of Emission Concentrations from Stationary Sources. Publication No. 450/4–90–015. Available from the U.S. EPA, Emission Measurement Technical Information Center, Technical Support Division (MD–14), Research Triangle Park, NC 27711.

18.15 Wernimont, G.T., ''Use of Statistics to Develop and Evaluate Analytical Methods,'' AOAC, 1111 North 19th Street, Suite 210, Arlington, VA 22209, USA, 78–82 (1987).

18.16 Youden, W.J. Statistical techniques for collaborative tests. In: Statistical Manual of the Association of Official Analytical Chemists, Association of Official Analytical Chemists, Washington, DC, 1975, pp. 33–36.

18.17 NIST/SEMATECH (current version), ''e-Handbook of Statistical Methods,'' available from NIST, *http://www.itl.nist.gov/div898/handbook/*.

18.18 Statistical Table, *http://www.math.usask.ca/~szafron/Stats244/f_table_0_05.pdf*.

*19.0 Tables.*

TABLE 301–1—SAMPLING PROCEDURES

| If you are . . . | You must collect . . . |
|---|---|
| Comparing the candidate test method against a validated method. | A total of 24 samples using a quadruplicate sampling system (a total of six sets of replicate samples). In each quadruplicate sample set, you must use the validated test method to collect and analyze half of the samples. |
| Using isotopic spiking (can only be used with methods capable of measurement of multiple isotopes simultaneously). | A total of 12 samples, all of which are spiked with isotopically-labeled analyte. You may collect the samples either by obtaining six sets of paired samples or three sets of quadruplicate samples. |
| Using analyte spiking | A total of 24 samples using the quadruplicate sampling system (a total of six sets of replicate samples—two spiked and two unspiked). |

TABLE 301–2—STORAGE AND SAMPLING PROCEDURES FOR STACK TEST EMISSIONS

| If you are . . . | With . . . | Then you must . . . |
|---|---|---|
| Using isotopic or analyte spiking procedures. | Sample container (bag or canister) or impinger sampling systems that are not subject to dilution or other preparation steps. | Analyze six of the samples within 7 days and then analyze the same six samples at the proposed maximum storage duration or 2 weeks after the initial analysis. |
| | Sorbent and impinger sampling systems that require extraction or digestion. | Extract or digest six of the samples within 7 days and extract or digest six other samples at the proposed maximum storage duration or 2 weeks after the first extraction or digestion. Analyze an aliquot of the first six extracts (digestates) within 7 days and proposed maximum storage duration or 2 weeks after the initial analysis. This will allow analysis of extract storage impacts. |
| | Sorbent sampling systems that require thermal desorption. | Analyze six samples within 7 days. Analyze another set of six samples at the proposed maximum storage time or within 2 weeks of the initial analysis. |
| Comparing a candidate test method against a validated test method. | Sample container (bag or canister) or impinger sampling systems that are not subject to dilution or other preparation steps. | Analyze at least six of the candidate test method samples within 7 days and then analyze the same six samples at the proposed maximum storage duration or within 2 weeks of the initial analysis. |
| | Sorbent and impinger sampling systems that require extraction or digestion. | Extract or digest six of the candidate test method samples within 7 days and extract or digest six other samples at the proposed maximum storage duration or within 2 weeks of the first extraction or digestion. Analyze an aliquot of the first six extracts (digestates) within 7 days and an aliquot at the proposed maximum storage durations or within 2 weeks of the initial analysis. This will allow analysis of extract storage impacts. |
| | Sorbent systems that require thermal desorption. | Analyze six samples within 7 days. Analyze another set of six samples at the proposed maximum storage duration or within 2 weeks of the initial analysis. |

TABLE 301–3—CRITICAL VALUES OF t FOR THE TWO-TAILED 95 PERCENT CONFIDENCE LIMIT [1]

| Degrees of freedom | $t_{95}$ |
|---|---|
| 1 | 12.706 |
| 2 | 4.303 |
| 3 | 3.182 |
| 4 | 2.776 |
| 5 | 2.571 |
| 6 | 2.447 |
| 7 | 2.365 |
| 8 | 2.306 |
| 9 | 2.262 |
| 10 | 2.228 |
| 11 | 2.201 |
| 12 | 2.179 |
| 13 | 2.160 |
| 14 | 2.145 |
| 15 | 2.131 |
| 16 | 2.120 |
| 17 | 2.110 |
| 18 | 2.101 |
| 19 | 2.093 |
| 20 | 2.086 |

[1] Adapted from Reference 18.17 in section 18.0.

TABLE 301–4—UPPER CRITICAL VALUES OF THE F DISTRIBUTION FOR THE 95 PERCENT CONFIDENCE LIMIT [1]

| Numerator ($k_1$) and denominator ($k_2$) degrees of freedom | $F\{F>F_{.05}(k_1,k_2)\}$ |
|---|---|
| 1,1 | 161.40 |
| 2,2 | 19.00 |
| 3,3 | 9.28 |
| 4,4 | 6.39 |
| 5,5 | 5.05 |
| 6,6 | 4.28 |
| 7,7 | 3.79 |
| 8,8 | 3.44 |
| 9,9 | 3.18 |
| 10,10 | 2.98 |
| 11,11 | 2.82 |
| 12,12 | 2.69 |
| 13,13 | 2.58 |
| 14,14 | 2.48 |
| 15,15 | 2.40 |
| 16,16 | 2.33 |
| 17,17 | 2.27 |
| 18,18 | 2.22 |
| 19,19 | 2.17 |
| 20,20 | 2.12 |

[1] Adapted from References 18.17 and 18.18 in section 18.0.

TABLE 301–5—PROCEDURES FOR ESTIMATING $S_o$

| | |
|---|---|
| If the estimated LOD ($LOD_1$, expected approximate LOD concentration level) is no more than twice the calculated LOD or an analyte in a sample matrix was collected prior to an analytical measurement, use Procedure I as follows. | If the estimated LOD ($LOD_1$, expected approximate LOD concentration level) is greater than twice the calculated LOD, use Procedure II as follows. |
| *Procedure I:* | *Procedure II:* |
| Determine the LOD by calculating a method detection limit (MDL) as described in 40 CFR part 136, appendix B. | Prepare two additional standards ($LOD_2$ and $LOD_3$) at concentration levels lower than the standard used in Procedure I ($LOD_1$).<br>Sample and analyze each of these standards ($LOD_2$ and $LOD_3$) at least seven times. |

TABLE 301–5—PROCEDURES FOR ESTIMATING $S_o$—Continued

| | |
|---|---|
| | Calculate the standard deviation ($S_2$ and $S_3$) for each concentration level.<br>Plot the standard deviations of the three test standards ($S_1$, $S_2$ and $S_3$) as a function of concentration.<br>Draw a best-fit straight line through the data points and extrapolate to zero concentration. The standard deviation at zero concentration is $S_o$.<br>Calculate the $LOD_0$ (referred to as the calculated LOD) as 3 times $S_o$. |

METHOD 303—DETERMINATION OF VISIBLE EMISSIONS FROM BY-PRODUCT COKE OVEN BATTERIES

NOTE: This method is not inclusive with respect to observer certification. Some material is incorporated by reference from other methods in appendix A to 40 CFR part 60. Therefore, to obtain reliable results, persons using this method should have a thorough knowledge of Method 9.

*1.0 Scope and Application*

1.1 Applicability. This method is applicable for the determination of visible emissions (VE) from the following by-product coke oven battery sources: charging systems during charging; doors, topside port lids, and offtake systems on operating coke ovens; and collecting mains. This method is also applicable for qualifying observers for visually determining the presence of VE. In order for the test method results to be indicative of plant performance, the time of day of the run should vary.

*2.0 Summary of Method*

2.1 A certified observer visually determines the VE from coke oven battery sources. Certification procedures are presented. This method does not require that opacity of emissions be determined or that magnitude be differentiated.

*3.0 Definitions*

3.1 *Bench* means the platform structure in front of the oven doors.

3.2 *By-product Coke Oven Battery* means a source consisting of a group of ovens connected by common walls, where coal undergoes destructive distillation under positive pressure to produce coke and coke oven gas, from which by-products are recovered.

3.3 *Charge or charging period* means the period of time that commences when coal begins to flow into an oven through a topside port and ends when the last charging port is recapped.

3.4 *Charging system* means an apparatus used to charge coal to a coke oven (*e.g.*, a larry car for wet coal charging systems).

3.5 *Coke oven door* means each end enclosure on the push side and the coking side of an oven. The chuck, or leveler-bar, door is considered part of the push side door. The coke oven door area includes the entire area on the vertical face of a coke oven between the bench and the top of the battery between two adjacent buck stays.

3.6 *Coke side* means the side of a battery from which the coke is discharged from ovens at the end of the coking cycle.

3.7 *Collecting* main means any apparatus that is connected to one or more offtake systems and that provides a passage for conveying gases under positive pressure from the by-product coke oven battery to the by-product recovery system.

3.8 *Consecutive charges* means charges observed successively, excluding any charge during which the observer's view of the charging system or topside ports is obscured.

3.9 *Damper-off* means to close off the gas passage between the coke oven and the collecting main, with no flow of raw coke oven gas from the collecting main into the oven or into the oven's offtake system(s).

3.10 *Decarbonization period* means the period of time for combusting oven carbon that commences when the oven lids are removed from an empty oven or when standpipe caps of an oven are opened. The period ends with the initiation of the next charging period for that oven.

3.11 *Larry car* means an apparatus used to charge coal to a coke oven with a wet coal charging system.

3.12 *Log average* means logarithmic average as calculated in Section 12.4.

3.13 *Offtake system* means any individual oven apparatus that is stationary and provides a passage for gases from an oven to a coke oven battery collecting main or to another oven. Offtake system components include the standpipe and standpipe caps, goosenecks, stationary jumper pipes, mini-

standpipes, and standpipe and gooseneck connections.

3.14 *Operating oven* means any oven not out of operation for rebuild or maintenance work extensive enough to require the oven to be skipped in the charging sequence.

3.15 *Oven* means a chamber in the coke oven battery in which coal undergoes destructive distillation to produce coke.

3.16 *Push side* means the side of the battery from which the coke is pushed from ovens at the end of the coking cycle.

3.17 *Run* means the observation of visible emissions from topside port lids, offtake systems, coke oven doors, or the charging of a single oven in accordance with this method.

3.18 *Shed* means an enclosure that covers the side of the coke oven battery, captures emissions from pushing operations and from leaking coke oven doors on the coke side or push side of the coke oven battery, and routes the emissions to a control device or system.

3.19 *Standpipe cap* means An apparatus used to cover the opening in the gooseneck of an offtake system.

3.20 *Topside port lid* means a cover, removed during charging or decarbonizing, that is placed over the opening through which coal can be charged into the oven of a by-product coke oven battery.

3.21 *Traverse time* means accumulated time for a traverse as measured by a stopwatch. Traverse time includes time to stop and write down oven numbers but excludes time waiting for obstructions of view to clear or for time to walk around obstacles.

3.22 *Visible Emissions or VE* means any emission seen by the unaided (except for corrective lenses) eye, excluding steam or condensing water.

### *4.0 Interferences* [Reserved]

### *5.0 Safety*

5.1 Disclaimer. This method may involve hazardous materials, operations, and equipment. This test method may not address all of the safety problems associated with its use. It is the responsibility of the user of this test method to establish appropriate safety and health practices and determine the applicability of regulatory limitations prior to performing this test method.

5.2 Safety Training. Because coke oven batteries have hazardous environments, the training materials and the field training (section 10.0) shall cover the precautions required to address health and safety hazards.

### *6.0 Equipment and Supplies* [Reserved]

### *7.0 Reagents and Standards* [Reserved]

### *8.0 Sample Collection, Preservation, Transport, and Storage* [Reserved]

### *9.0 Quality Control* [Reserved]

### *10.0 Calibration and Standardization*

Observer certification and training requirements are as follows:

10.1 Certification Procedures. This method requires only the determination of whether VE occur and does not require the determination of opacity levels; therefore, observer certification according to Method 9 in appendix A to part 60 of this chapter is not required to obtain certification under this method. However, in order to receive Method 303 observer certification, the first-time observer (trainee) shall have attended the lecture portion of the Method 9 certification course. In addition, the trainee shall successfully complete the Method 303 training course, satisfy the field observation requirement, and demonstrate adequate performance and sufficient knowledge of Method 303. The Method 303 training provider and course shall be approved by the Administrator and shall consist of classroom instruction, field training, and a proficiency test. In order to apply for approval as a Method 303 training provider, an applicant must submit their credentials and the details of their Method 303 training course to Group Leader, Measurement Technology Group (E143–02), Office of Air Quality Planning and Standards, U.S. Environmental Protection Agency, Research Triangle Park, NC 27711. Those details should include, at a minimum:

(a) A detailed list of the provider's credentials.

(b) An outline of the classroom and the field portions of the class.

(c) Copies of the written training and lecture materials, to include:

(1) The classroom audio-visual presentation(s).

(2) A classroom course manual with instructional text, practice questions and problems for each of the elements of the Method 303 inspection (*i.e.*, charging, doors, lids and offtakes, and collecting mains). A copy of Method 303 and any related guidance documents should be included as appendices.

(3) A copy of the Method 303 demonstration video, if not using the one available at: *http://www3.epa.gov/ttn/emc/methods/method303trainingvideo.mp4*.

(4) Multiple-choice certification tests, with questions sufficient to demonstrate knowledge of the method, as follows: One (1) Initial certification test and three (3) third-year recertification tests (the questions on any one

recertification test must be at least 25 percent different from those on the other recertification tests).

(5) A field certification checklist and inspection forms for each of the elements of the Method 303 inspection (*i.e.*, charging, doors, lids and offtakes, and collecting mains).

(6) The criteria used to determine proficiency.

(7) The panel members to be utilized (see Section 10.1.3) along with their qualifications.

(8) An example certificate of successful course completion.

10.1.1 A trainee must verify completion of at least 12 hours of field observation prior to attending the Method 303 certification course. Trainees shall observe the operation of a coke oven battery as it pertains to Method 303, including topside operations, and shall also practice conducting Method 303 or similar methods. During the field observations, trainees unfamiliar with coke battery operations shall receive instruction from an experienced coke oven observer who is familiar with Method 303 or similar methods and with the operation of coke batteries.

10.1.2 The classroom instruction shall familiarize the trainees with Method 303 through lecture, written training materials, and a Method 303 demonstration video. Successful completion of the classroom portion of the Method 303 training course shall be demonstrated by a perfect score on the initial certification test. Those attending the course for third-year recertification must complete one of the recertification tests selected at random.

10.1.3 All trainees must demonstrate proficiency in the application of Method 303 to a panel of three certified Method 303 observers, including an ability to differentiate coke oven emissions from condensing water vapor and smoldering coal. The composition of the panel must be approved by the Administrator as part of the training course approval process. The panel members will be EPA, state or local agency personnel, or industry contractors listed in 59 FR 11960 (March 15, 1994) or qualified as part of the training provider approval process of section 10.1 of this method.

Each panel member shall have at least 120 days experience in reading visible emissions from coke ovens. The visible emissions inspections that will satisfy the experience requirement must be inspections of coke oven battery fugitive emissions from the emission points subject to emission standards under subpart L of this part (*i.e.*, coke oven doors, topside port lids, offtake system(s), and charging operations), using either Method 303 or predecessor state or local test methods. A ''day's experience'' for a particular inspection is a day on which one complete inspection was performed for that emission point under Method 303 or a predecessor state or local method. A ''day's experience'' does not mean 8 or 10 hours performing inspections, or any particular time expressed in minutes or hours that may have been spent performing them. Thus, it would be possible for an individual to qualify as a Method 303 panel member for some emission points, but not others (*e.g.*, an individual might satisfy the experience requirement for coke oven doors, but not topside port lids). Until November 15, 1994, the EPA may waive the certification requirement (but not the experience requirement) for panel members. The composition of the panel shall be approved by the EPA.

The panel shall observe the trainee in a series of training runs and a series of certification runs. There shall be a minimum of 1 training run for doors, topside port lids, and offtake systems, and a minimum of 5 training runs (*i.e.*, 5 charges) for charging. During training runs, the panel can advise the trainee on proper procedures. There shall be a minimum of 3 certification runs for doors, topside port lids, and offtake systems, and a minimum of 15 certification runs for charging (*i.e.*, 15 charges). The certification runs shall be unassisted. Following the certification test runs, the panel shall approve or disapprove certification based on the trainee's performance during the certification runs. To obtain certification, the trainee shall demonstrate, to the satisfaction of the panel, a high degree of proficiency in performing Method 303. To aid in evaluating the trainee's performance, a checklist, approved by the EPA, will be used by the panel members.

10.1.4 Those successfully completing the initial certification or third-year recertification requirements shall receive a certificate showing certification as a Method 303 observer and the beginning and ending dates of the certification period.

10.1.5 The training provider will submit to the EPA or its designee the following information for each trainee successfully completing initial certification or third-year recertification training: Name, employer, address, telephone, cell and/or fax numbers, email address, beginning and ending dates of certification, and whether training was for 3-year certification or 1-year recertification. This information must be submitted within 30 days of the course completion.

10.1.6 The training provider will maintain the following records, to be made available to EPA or its designee on request (within 30 days of a request):

(a) A file for each Method 303 observer containing the signed certification checklists, certification forms and test results for their initial certification, and any subsequent third-year recertifications. Initial certification records must also include documentation showing successful completion of the

training prerequisites. Testing results from any interim recertifications must also be included, along with any relevant communications.

(b) A searchable master electronic database of all persons for whom initial certification, third-year recertification or interim recertification. Information contained therein must include: The observer's name, employer, address, telephone, cell and fax numbers and email address, along with the beginning and ending dates for each successfully completed initial, third-year and interim recertification.

10.1.7 Failure by the training provider to submit example training course materials and/or requested training records to the Administrator may result in suspension of the approval of the provider and course.

10.2 Observer Certification/Recertification. The coke oven observer certification is valid for 1 year. The observer shall recertify annually by reviewing the training material, viewing the training video and answering all of the questions on the recertification test correctly. Every 3 years, an observer shall be required to pass the proficiency test in section 10.1.3 in order to be certified. The years between proficiency tests are referred to as interim years.

10.3 The EPA (or applicable enforcement agency) shall maintain records reflecting a certified observer's successful completion of the proficiency test, which shall include the completed proficiency test checklists for the certification runs.

10.4 An owner or operator of a coke oven battery subject to subpart L of this part may observe a training and certification program under this section.

*11.0 Procedure*

11.1 Procedure for Determining VE from Charging Systems During Charging.

11.1.1 Number of Oven Charges. Refer to § 63.309(c)(1) of this part for the number of oven charges to observe. The observer shall observe consecutive charges. Charges that are nonconsecutive can only be observed when necessary to replace observations terminated prior to the completion of a charge because of visual interferences. (See Section 11.1.5).

11.1.2 Data Records. Record all the information requested at the top of the charging system inspection sheet (Figure 303–1). For each charge, record the identification number of the oven being charged, the approximate beginning time of the charge, and the identification of the larry car used for the charge.

11.1.3 Observer Position. Stand in an area or move to positions on the topside of the coke oven battery with an unobstructed view of the entire charging system. For wet coal charging systems or non-pipeline coal charging systems, the observer should have an unobstructed view of the emission points of the charging system, including larry car hoppers, drop sleeves, and the topside ports of the oven being charged. Some charging systems are configured so that all emission points can only be seen from a distance of five ovens. For other batteries, distances of 8 to 12 ovens are adequate.

11.1.4 Observation. The charging period begins when coal begins to flow into the oven and ends when the last charging port is recapped. During the charging period, observe all of the potential sources of VE from the entire charging system. For wet coal charging systems or non-pipeline coal charging systems, sources of VE typically include the larry car hoppers, drop sleeves, slide gates, and topside ports on the oven being charged. Any VE from an open standpipe cap on the oven being charged is included as charging VE.

11.1.4.1 Using an accumulative-type stopwatch with unit divisions of at least 0.5 seconds, determine the total time VE are observed as follows. Upon observing any VE emerging from any part of the charging system, start the stopwatch. Stop the watch when VE are no longer observed emerging, and restart the watch when VE reemerges.

11.1.4.2 When VE occur simultaneously from several points during a charge, consider the sources as one. Time overlapping VE as continuous VE. Time single puffs of VE only for the time it takes for the puff to emerge from the charging system. Continue to time VE in this manner for the entire charging period. Record the accumulated time to the nearest 0.5 second under ''Visible emissions, seconds'' on Figure 303–1.

11.1.5 Visual Interference. If fugitive VE from other sources at the coke oven battery site (*e.g.*, door leaks or condensing water vapor from the coke oven wharf) prevent a clear view of the charging system during a charge, stop the stopwatch and make an appropriate notation under ''Comments'' on Figure 303–1. Label the observation an observation of an incomplete charge, and observe another charge to fulfill the requirements of Section 11.1.1.

11.1.6 VE Exemptions. Do not time the following VE:

11.1.6.1 The VE from burning or smoldering coal spilled on top of the oven, topside port lid, or larry car surfaces;

NOTE: The VE from smoldering coal are generally white or gray. These VE generally have a plume of less than 1 meter long. If the observer cannot safely and with reasonable confidence determine that VE are from charging, do not count them as charging emissions.

11.1.6.2 The VE from the coke oven doors or from the leveler bar; or

11.1.6.3 The VE that drift from the top of a larry car hopper if the emissions had already been timed as VE from the drop sleeve.

NOTE: When the slide gate on a larry car hopper closes after the coal has been added to the oven, the seal may not be airtight. On occasions, a puff of smoke observed at the drop sleeves is forced past the slide gate up into the larry car hopper and may drift from the top; time these VE either at the drop sleeves or the hopper. If the larry car hopper does not have a slide gate or the slide gate is left open or partially closed, VE may quickly pass through the larry car hopper without being observed at the drop sleeves and will appear as a strong surge of smoke; time these as charging VE.

11.1.7 Total Time Record. Record the total time that VE were observed for each charging operation in the appropriate column on the charging system inspection sheet.

11.1.8 Determination of Validity of a Set of Observations. Five charging observations (runs) obtained in accordance with this method shall be considered a valid set of observations for that day. No observation of an incomplete charge shall be included in a daily set of observations that is lower than the lowest reading for a complete charge. If both complete and incomplete charges have been observed, the daily set of observations shall include the five highest values observed. Four or three charging observations (runs) obtained in accordance with this method shall be considered a valid set of charging observations only where it is not possible to obtain five charging observations, because visual interferences (see Section 11.1.5) or inclement weather prevent a clear view of the charging system during charging. However, observations from three or four charges that satisfy these requirements shall not be considered a valid set of charging observations if use of such set of observations in a calculation under Section 12.4 would cause the value of A to be less than 145.

11.1.9 Log Average. For each day on which a valid daily set of observations is obtained, calculate the daily 30-day rolling log average of seconds of visible emissions from the charging operation for each battery using these data and the 29 previous valid daily sets of observations, in accordance with Section 12.4.

11.2. Procedure for Determining VE from Coke Oven Door Areas. The intent of this procedure is to determine VE from coke oven door areas by carefully observing the door area from a standard distance while walking at a normal pace.

11.2.1 Number of Runs. Refer to § 63.309(c)(1) of this part for the appropriate number of runs.

11.2.2 Battery Traverse. To conduct a battery traverse, walk the length of the battery on the outside of the pusher machine and quench car tracks at a steady, normal walking pace, pausing to make appropriate entries on the door area inspection sheet (Figure 303–2). A single test run consists of two timed traverses, one for the coke side and one for the push side. The walking pace shall be such that the duration of the traverse does not exceed an average of 4 seconds per oven door, excluding time spent moving around stationary obstructions or waiting for other obstructions to move from positions blocking the view of a series of doors. Extra time is allowed for each leak (a maximum of 10 additional seconds for each leaking door) for the observer to make the proper notation. A walking pace of 3 seconds per oven door has been found to be typical. Record the actual traverse time with a stopwatch.

11.2.2.1 Include in the traverse time only the time spent observing the doors and recording door leaks. To measure actual traverse time, use an accumulative-type stopwatch with unit divisions of 0.5 seconds or less. Exclude interruptions to the traverse and time required for the observer to move to positions where the view of the battery is unobstructed, or for obstructions, such as the door machine, to move from positions blocking the view of a series of doors.

11.2.2.2 Various situations may arise that will prevent the observer from viewing a door or a series of doors. Prior to the door inspection, the owner or operator may elect to temporarily suspend charging operations for the duration of the inspection, so that all of the doors can be viewed by the observer. The observer has two options for dealing with obstructions to view: (a) Stop the stopwatch and wait for the equipment to move or the fugitive emissions to dissipate before completing the traverse; or (b) stop the stopwatch, skip the affected ovens, and move to an unobstructed position to continue the traverse. Restart the stopwatch and continue the traverse. After the completion of the traverse, if the equipment has moved or the fugitive emissions have dissipated, inspect the affected doors. If the equipment is still preventing the observer from viewing the doors, then the affected doors may be counted as not observed. If option (b) is used because of doors blocked by machines during charging operations, then, of the affected doors, exclude the door from the most recently charged oven from the inspection. Record the oven numbers and make an appropriate notation under ''Comments'' on the door area inspection sheet (Figure 303–2).

11.2.2.3 When batteries have sheds to control emissions, conduct the inspection from outside the shed unless the doors cannot be adequately viewed. In this case, conduct the inspection from the bench. Be aware of special safety considerations pertinent to walking on the bench and follow the instructions

of company personnel on the required equipment and procedures. If possible, conduct the bench traverse whenever the bench is clear of the door machine and hot coke guide.

11.2.3 Observations. Record all the information requested at the top of the door area inspection sheet (Figure 303–2), including the number of non-operating ovens. Record the clock time at the start of the traverse on each side of the battery. Record which side is being inspected (*i.e.*, coke side or push side). Other information may be recorded at the discretion of the observer, such as the location of the leak (*e.g.*, top of the door, chuck door, etc.), the reason for any interruption of the traverse, or the position of the sun relative to the battery and sky conditions (*e.g.*, overcast, partly sunny, etc.).

11.2.3.1 Begin the test run by starting the stopwatch and traversing either the coke side or the push side of the battery. After completing one side, stop the watch. Complete this procedure on the other side. If inspecting more than one battery, the observer may view the push sides and the coke sides sequentially.

11.2.3.2 During the traverse, look around the entire perimeter of each oven door. The door is considered leaking if VE are detected in the coke oven door area. The coke oven door area includes the entire area on the vertical face of a coke oven between the bench and the top of the battery between two adjacent buck stays (*e.g.*, the oven door, chuck door, between the masonry brick, buck stay or jamb, or other sources). Record the oven number and make the appropriate notation on the door area inspection sheet (Figure 303–2).

NOTE: Multiple VE from the same door area (*e.g.*, VE from both the chuck door and the push side door) are counted as only one emitting door, not as multiple emitting doors.

11.2.3.3 Do not record the following sources as door area VE:

11.2.3.3.1 VE from ovens with doors removed. Record the oven number and make an appropriate notation under ''Comments;''

11.2.3.3.2 VE from ovens taken out of service. The owner or operator shall notify the observer as to which ovens are out of service. Record the oven number and make an appropriate notation under ''Comments;'' or

11.2.3.3.3 VE from hot coke that has been spilled on the bench as a result of pushing.

11.2.4 Criteria for Acceptance. After completing the run, calculate the maximum time allowed to observe the ovens using the equation in Section 12.2. If the total traverse time exceeds T, void the run, and conduct another run to satisfy the requirements of § 63.309(c)(1) of this part.

11.2.5 Percent Leaking Doors. For each day on which a valid observation is obtained, calculate the daily 30-day rolling average for each battery using these data and the 29 previous valid daily observations, in accordance with Section 12.5.

11.3 Procedure for Determining VE from Topside Port Lids and Offtake Systems.

11.3.1 Number of Runs. Refer to § 63.309(c)(1) of this part for the number of runs to be conducted. Simultaneous runs or separate runs for the topside port lids and offtake systems may be conducted.

11.3.2 Battery Traverse. To conduct a topside traverse of the battery, walk the length of the battery at a steady, normal walking pace, pausing only to make appropriate entries on the topside inspection sheet (Figure 303–3). The walking pace shall not exceed an average rate of 4 seconds per oven, excluding time spent moving around stationary obstructions or waiting for other obstructions to move from positions blocking the view. Extra time is allowed for each leak for the observer to make the proper notation. A walking pace of 3 seconds per oven is typical. Record the actual traverse time with a stopwatch.

11.3.3 Topside Port Lid Observations. To observe lids of the ovens involved in the charging operation, the observer shall wait to view the lids until approximately 5 minutes after the completion of the charge. Record all the information requested on the topside inspection sheet (Figure 303–3). Record the clock time when traverses begin and end. If the observer's view is obstructed during the traverse (*e.g.*, steam from the coke wharf, larry car, etc.), follow the guidelines given in Section 11.2.2.2.

11.3.3.1 To perform a test run, conduct a single traverse on the topside of the battery. The observer shall walk near the center of the battery but may deviate from this path to avoid safety hazards (such as open or closed charging ports, luting buckets, lid removal bars, and topside port lids that have been removed) and any other obstacles. Upon noting VE from the topside port lid(s) of an oven, record the oven number and port number, then resume the traverse. If any oven is dampered-off from the collecting main for decarbonization, note this under ''Comments'' for that particular oven.

NOTE: Count the number of topside ports, not the number of points, exhibiting VE, *i.e.*, if a topside port has several points of VE, count this as one port exhibiting VE.

11.3.3.2 Do not count the following as topside port lid VE:

11.3.3.2.1 VE from between the brickwork and oven lid casing or VE from cracks in the oven brickwork. Note these VE under ''Comments;''

11.3.3.2.2 VE from topside ports involved in a charging operation. Record the oven number, and make an appropriate notation (*e.g.*, not observed because ports open for charging) under ''Comments;''

11.3.3.2.3 Topside ports having maintenance work done. Record the oven number and make an appropriate notation under ''Comments;'' or

11.3.3.2.4 Condensing water from wet-sealing material. Ports with only visible condensing water from wet-sealing material are counted as observed but not as having VE.

11.3.3.2.5 Visible emissions from the flue inspection ports and caps.

11.3.4 Offtake Systems Observations. To perform a test run, traverse the battery as in Section 11.3.3.1. Look ahead and back two to four ovens to get a clear view of the entire offtake system for each oven. Consider visible emissions from the following points as offtake system VE: (a) the flange between the gooseneck and collecting main (''saddle''), (b) the junction point of the standpipe and oven (''standpipe base''), (c) the other parts of the offtake system (*e.g.*, the standpipe cap), and (d) the junction points with ovens and flanges of jumper pipes.

11.3.4.1 Do not stray from the traverse line in order to get a ''closer look'' at any part of the offtake system unless it is to distinguish leaks from interferences from other sources or to avoid obstacles.

11.3.4.2 If the centerline does not provide a clear view of the entire offtake system for each oven (*e.g.*, when standpipes are longer than 15 feet), the observer may conduct the traverse farther from (rather than closer to) the offtake systems.

11.3.4.3 Upon noting a leak from an offtake system during a traverse, record the oven number. Resume the traverse. If the oven is dampered-off from the collecting main for decarbonization and VE are observed, note this under ''Comments'' for that particular oven.

11.3.4.4 If any part or parts of an offtake system have VE, count it as one emitting offtake system. Each stationary jumper pipe is considered a single offtake system.

11.3.4.5 Do not count standpipe caps open for a decarbonization period or standpipes of an oven being charged as source of offtake system VE. Record the oven number and write ''Not observed'' and the reason (*i.e.*, decarb or charging) under ''Comments.''

NOTE: VE from open standpipes of an oven being charged count as charging emissions. All VE from closed standpipe caps count as offtake leaks.

11.3.5 Criteria for Acceptance. After completing the run (allow 2 traverses for batteries with double mains), calculate the maximum time allowed to observe the topside port lids and/or offtake systems using the equation in Section 12.3. If the total traverse time exceeds T, void the run and conduct another run to satisfy the requirements of § 63.309(c)(1) of this part.

11.3.6 In determining the percent leaking topside port lids and percent leaking offtake systems, do not include topside port lids or offtake systems with VE from the following ovens:

11.3.6.1 Empty ovens, including ovens undergoing maintenance, which are properly dampered off from the main.

11.3.6.2 Ovens being charged or being pushed.

11.3.6.3 Up to 3 full ovens that have been dampered off from the main prior to pushing.

11.3.6.4 Up to 3 additional full ovens in the pushing sequence that have been dampered off from the main for offtake system cleaning, for decarbonization, for safety reasons, or when a charging/pushing schedule involves widely separated ovens (e.g., a Marquard system); or that have been dampered off from the main for maintenance near the end of the coking cycle. Examples of reasons that ovens are dampered off for safety reasons are to avoid exposing workers in areas with insufficient clearance between standpipes and the larry car, or in areas where workers could be exposed to flames or hot gases from open standpipes, and to avoid the potential for removing a door on an oven that is not dampered off from the main.

11.3.7 Percent Leaking Topside Port Lids and Offtake Systems. For each day on which a valid observation is obtained, calculate the daily 30-day rolling average for each battery using these data and the 29 previous valid daily observations, in accordance with Sections 12.6 and 12.7.

11.4 Procedure for Determining VE from Collecting Mains.

11.4.1 Traverse. To perform a test run, traverse both the collecting main catwalk and the battery topside along the side closest to the collecting main. If the battery has a double main, conduct two sets of traverses for each run, i.e., one set for each main.

11.4.2 Data Recording. Upon noting VE from any portion of a collection main, identify the source and approximate location of the source of VE and record the time under ''Collecting main'' on Figure 303–3; then resume the traverse.

11.4.3 Collecting Main Pressure Check. After the completion of the door traverse, the topside port lids, and offtake systems, compare the collecting main pressure during the inspection to the collecting main pressure during the previous 8 to 24 hours. Record the following: (a) the pressure during inspection, (b) presence of pressure deviation from normal operations, and (c) the explanation for any pressure deviation from normal operations, if any, offered by the operators. The owner or operator of the coke battery shall maintain the pressure recording equipment and conduct the quality assurance/quality control (QA/QC) necessary to ensure reliable pressure readings and shall keep the QA/QC records for at least 6 months. The observer may periodically check the QA/QC records to determine their

completeness. The owner or operator shall provide access to the records within 1 hour of an observer's request.

*12.0 Data Analysis and Calculations*

12.1 Nomenclature.

A = 150 or the number of valid observations (runs). The value of A shall not be less than 145, except for purposes of determinations under §63.306(c) (work practice plan implementation) or §63.306(d) (work practice plan revisions) of this part. No set of observations shall be considered valid for such a recalculation that otherwise would not be considered a valid set of observations for a calculation under this paragraph.

$D_i$ = Number of doors on non-operating ovens.

$D_{no}$ = Number of doors not observed.

$D_{ob}$ = Total number of doors observed on operating ovens.

$D_t$ = Total number of oven doors on the battery.

e = 2.72

J = Number of stationary jumper pipes.

L = Number of doors with VE.

$L_b$ = Yard-equivalent reading.

$L_s$ = Number of doors with VE observed from the bench under sheds.

$L_y$ = Number of doors with VE observed from the yard.

$L_y$ = Number of doors with VE observed from the yard on the push side.

ln = Natural logarithm.

N = Total number of ovens in the battery.

$N_i$ = Total number of inoperable ovens.

$P_{NO}$ = Number of ports not observed.

$P_{ovn}$ = Number of ports per oven.

$P_{VE}$ = Number of topside port lids with VE.

PLD = Percent leaking coke oven doors for the test run.

PLL = Percent leaking topside port lids for the run.

PLO = Percent leaking offtake systems.

T = Total time allowed for traverse, seconds.

$T_{ovn}$ = Number of offtake systems (excluding jumper pipes) per oven.

$T_{NO}$ = Number of offtake systems not observed.

$T_{VE}$ = Number of offtake systems with VE.

$X_i$ = Seconds of VE during the ith charge.

Z = Number of topside port lids or offtake systems with VE.

12.2 Criteria for Acceptance for VE Determinations from Coke Oven Door Areas. After completing the run, calculate the maximum time allowed to observe the ovens using the following equation:

$$T = (4 \times D_t) + (10 \times L) \qquad \text{Eq. 303-1}$$

12.3 Criteria for Acceptance for VE Determinations from Topside Port Lids and Offtake Systems. After completing the run (allow 2 traverses for batteries with double mains), calculate the maximum time allowed to observe the topside port lids and/or offtake systems by the following equation:

$$T = (4 \times N) + (10 \times Z) \qquad \text{Eq. 303-2}$$

12.4 Average Duration of VE from Charging Operations. Use Equation 303–3 to calculate the daily 30-day rolling log average of seconds of visible emissions from the charging operation for each battery using these current day's observations and the 29 previous valid daily sets of observations.

$$\text{logarithmic average} = e^{y} - 1 \qquad \text{(Eq. 303-3)}$$

where $y = \dfrac{\ln(X_1 + 1) + \ln(X_2 + 1) + \ldots \ln(X_i + 1)}{A}$

12.5 Percent Leaking Doors (PLD). Determine the total number of doors for which observations were made on the coke oven battery as follows:

$$D_{ob} = (2 \times N) - (D_i + D_{no}) \qquad \text{Eq. 303-4}$$

12.5.1 For each test run (one run includes both the coke side and the push side traverses), sum the number of doors with door area VE. For batteries subject to an approved alternative standard under §63.305 of this part, calculate the push side and the coke side PLD separately.

12.5.2 Calculate percent leaking doors by using Equation 303–5:

$$PLD = \frac{L_y}{D_{ob}} \times 100 \qquad \text{Eq. 303-5}$$

12.5.3 When traverses are conducted from the bench under sheds, calculate the coke side and the push side separately. Use Equation 303–6 to calculate a yard-equivalent reading:

$$L_b = L_s - (N \times 0.06) \qquad \text{Eq. 303-6}$$

If $L_b$ is less than zero, use zero for $L_b$ in Equation 303–7 in the calculation of PLD.

12.5.3.1 Use Equation 303–7 to calculate PLD:

$$PLD = \frac{L_b + L_y}{D_{ob}} \times 100 \qquad \text{Eq. 303-7}$$

Round off PLD to the nearest hundredth of 1 percent and record as the percent leaking coke oven doors for the run.

12.5.3.2 Average Percent Leaking Doors. Use Equation 303–8 to calculate the daily 30-day rolling average percent leaking doors for each battery using these current day's observations and the 29 previous valid daily sets of observations.

$$PLD_{(30\text{-day})} = \frac{(PLD_1 + PLD_2 + \ldots + PLD_{30})}{30} \qquad \text{Eq. 303-8}$$

12.6 Topside Port Lids. Determine the percent leaking topside port lids for each run as follows:

$$PLL = \frac{P_{VE}}{P_{ovn}(N - N_i) - P_{NO}} \times 100 \qquad \text{Eq. 303-9}$$

12.6.1 Round off this percentage to the nearest hundredth of 1 percent and record this percentage as the percent leaking topside port lids for the run.

12.6.2 Average Percent Leaking Topside Port Lids. Use Equation 303–10 to calculate the daily 30-day rolling average percent leaking topside port lids for each battery using these current day's observations and the 29 previous valid daily sets of observations.

$$\text{PLL (30-day)} = \frac{\left(\text{PLL}_1 + \text{PLL}_2 + \ldots + \text{PLL}_{30}\right)}{30} \qquad \text{Eq. 303-10}$$

12.7 Offtake Systems. Determine the percent leaking offtake systems for the run as follows:

$$\text{PLO} = \frac{\text{T}_{\text{VE}}}{\text{T}_{\text{ovn}}\left(\text{N} - \text{N}_{\text{i}}\right) + \text{J} - \text{T}_{\text{NO}}} \times 100 \qquad \text{Eq. 303-11}$$

12.7.1 Round off this percentage to the nearest hundredth of 1 percent and record this percentage as the percent leaking offtake systems for the run.

12.7.2 Average Percent Leaking Offtake Systems. Use Equation 303–12 to calculate the daily 30-day rolling average percent leaking offtake systems for each battery using these current day's observations and the 29 previous valid daily sets of observations.

$$\text{PLO (30-day)} = \frac{\left(\text{PLO}_1 + \text{PLO}_2 \ldots + \text{PLO}_{30}\right)}{30} \qquad \text{Eq. 303-12}$$

*13.0 Method Performance* [Reserved]

*14.0 Pollution Prevention* [Reserved]

*15.0 Waste Management* [Reserved]

*16.0 References.*

1. Missan, R., and A. Stein. Guidelines for Evaluation of Visible Emissions Certification, Field Procedures, Legal Aspects, and Background Material. U.S. Environmental Protection Agency. EPA Publication No. EPA–340/1–75–007. April 1975.

2. Wohlschlegel, P., and D. E. Wagoner. Guideline for Development of a Quality Assurance Program: Volume IX—Visual Determination of Opacity Emission from Stationary Sources. U.S. Environmental Protection Agency. EPA Publication No. EPA–650/4–74–005i. November 1975.

3. U.S. Occupational Safety and Health Administration. Code of Federal Regulations. Title 29, Chapter XVII, Section 1910.1029(g). Washington, D.C. Government Printing Office. July 1, 1990.

4. U.S. Environmental Protection Agency. National Emission Standards for Hazardous Air Pollutants; Coke Oven Emissions from Wet-Coal Charged By-Product Coke Oven Batteries; Proposed Rule and Notice of Public Hearing. Washington, D.C. FEDERAL REGISTER. Vol. 52, No. 78 (13586). April 23, 1987.

*17.0 Tables, Diagrams, Flowcharts, and Validation Data*

Company name: _____
Battery no.: _____ Date: _____ Run no.: _____
City, State: _____
Observer name: _____
Company representative(s): _____

| Charge No. | Oven No. | Clock time | Visible emissions, seconds | Comments |
|---|---|---|---|---|
| | | | | |

| Charge No. | Oven No. | Clock time | Visible emissions, seconds | Comments |
|---|---|---|---|---|
| | | | | |
| | | | | |
| | | | | |
| | | | | |
| | | | | |
| | | | | |
| | | | | |
| | | | | |
| | | | | |
| | | | | |
| | | | | |
| | | | | |
| | | | | |
| | | | | |
| | | | | |
| | | | | |
| | | | | |
| | | | | |
| | | | | |
| | | | | |
| | | | | |
| | | | | |

Figure 303–1. Charging System Inspection

Company name: _____
Battery no.: _____
Date: _____
City, State: _____
Total no. of ovens in battery: _____
Observer name: _____
Certification expiration date: _____
Inoperable ovens: _____
Company representative(s): _____
Traverse time CS: _____
Traverse time PS: _____
Valid run (Y or N): _____

| Time traverse started/ completed | PS/CS | Door No. | Comments (No. of blocked doors, interruptions to traverse, etc.) |
|---|---|---|---|
| | | | |
| | | | |
| | | | |
| | | | |
| | | | |
| | | | |

| Time traverse started/ completed | PS/CS | Door No. | Comments (No. of blocked doors, interruptions to traverse, etc.) |
|---|---|---|---|
| | | | |
| | | | |
| | | | |
| | | | |
| | | | |
| | | | |

Figure 303–2. Door Area Inspection.

Company name: _____
Battery no.: _____
Date: _____
City, State: _____
Total no. of ovens in battery: _____
Observer name: _____
Certification expiration date: _____
Inoperable ovens: _____
Company representative(s): _____
Total no. of lids: _____
Total no. of offtakes: _____
Total no. of jumper pipes: _____
Ovens not observed: _____
Total traverse time: _____
Valid run (Y or N): _____

| Time traverse started/ completed | Type of Inspection (lids, offtakes, collecting main) | Location of VE (Oven #/Port #) | Comments |
|---|---|---|---|
| | | | |
| | | | |
| | | | |
| | | | |
| | | | |
| | | | |
| | | | |
| | | | |
| | | | |
| | | | |
| | | | |
| | | | |
| | | | |
| | | | |
| | | | |
| | | | |
| | | | |
| | | | |
| | | | |
| | | | |

Figure 303–3. Topside Inspection

METHOD 303A—DETERMINATION OF VISIBLE EMISSIONS FROM NONRECOVERY COKE OVEN BATTERIES

NOTE: This method does not include all of the specifications pertaining to observer certification. Some material is incorporated by reference from other methods in this part and in appendix A to 40 CFR Part 60. Therefore, to obtain reliable results, persons using this method should have a thorough knowledge of Method 9 and Method 303.

*1.0 Scope and Application*

1.1 Applicability. This method is applicable for the determination of visible emissions (VE) from leaking doors at nonrecovery coke oven batteries.

*2.0 Summary of Method*

2.1 A certified observer visually determines the VE from coke oven battery sources while walking at a normal pace. This method does not require that opacity of emissions be determined or that magnitude be differentiated.

*3.0 Definitions*

3.1 *Bench* means the platform structure in front of the oven doors.

3.2 *Coke oven door* means each end enclosure on the push side and the coking side of an oven.

3.3 *Coke side* means the side of a battery from which the coke is discharged from ovens at the end of the coking cycle.

3.4 *Nonrecovery coke oven battery* means a source consisting of a group of ovens connected by common walls and operated as a unit, where coal undergoes destructive distillation under negative pressure to produce coke, and which is designed for the combustion of coke oven gas from which by-products are not recovered.

3.5 *Operating oven* means any oven not out of operation for rebuild or maintenance work extensive enough to require the oven to be skipped in the charging sequence.

3.6 *Oven* means a chamber in the coke oven battery in which coal undergoes destructive distillation to produce coke.

3.7 *Push side* means the side of the battery from which the coke is pushed from ovens at the end of the coking cycle.

3.8 *Run* means the observation of visible emissions from coke oven doors in accordance with this method.

3.9 *Shed* means an enclosure that covers the side of the coke oven battery, captures emissions from pushing operations and from leaking coke oven doors on the coke side or push side of the coke oven battery, and routes the emissions to a control device or system.

3.10 *Traverse time* means accumulated time for a traverse as measured by a stopwatch. Traverse time includes time to stop and write down oven numbers but excludes time waiting for obstructions of view to clear or for time to walk around obstacles.

3.11 *Visible Emissions or VE* means any emission seen by the unaided (except for corrective lenses) eye, excluding steam or condensing water.

*4.0 Interferences* [Reserved]

*5.0 Safety*

5.1 Disclaimer. This method may involve hazardous materials, operations, and equipment. This test method may not address all of the safety problems associated with its use. It is the responsibility of the user of this test method to establish appropriate safety and health practices and determine the applicability of regulatory limitations prior to performing this test method.

5.2 Safety Training. Because coke oven batteries have hazardous environments, the training materials and the field training (Section 10.0) shall cover the precautions required by the company to address health and safety hazards. Special emphasis shall be given to the Occupational Safety and Health Administration (OSHA) regulations pertaining to exposure of coke oven workers (see Reference 3 in Section 16.0). In general, the regulation requires that special fire-retardant clothing and respirators be worn in certain restricted areas of the coke oven battery. The OSHA regulation also prohibits certain activities, such as chewing gum, smoking, and eating in these areas.

*6.0 Equipment and Supplies* [Reserved]

*7.0 Reagents and Standards* [Reserved]

*8.0 Sample Collection, Preservation, Transport, and Storage* [Reserved]

*9.0 Quality Control* [Reserved]

*10.0 Calibration and Standardization.*

10.1 Training. This method requires only the determination of whether VE occur and does not require the determination of opacity levels; therefore, observer certification according to Method 9 in Appendix A to Part 60 is not required. However, the first-time observer (trainee) shall have attended the lecture portion of the Method 9 certification course. Furthermore, before conducting any VE observations, an observer shall become familiar with nonrecovery coke oven battery operations and with this test method by observing for a minimum of 4 hours the operation of a nonrecovery coke oven battery in the presence of personnel experienced in performing Method 303 assessments.

*11.0 Procedure*

The intent of this procedure is to determine VE from coke oven door areas by carefully observing the door area while walking at a normal pace.

11.1 Number of Runs. Refer to § 63.309(c)(1) of this part for the appropriate number of runs.

11.2 Battery Traverse. To conduct a battery traverse, walk the length of the battery on the outside of the pusher machine and quench car tracks at a steady, normal walking pace, pausing to make appropriate entries on the door area inspection sheet (Figure 303A–1). The walking pace shall be such that the duration of the traverse does not exceed an average of 4 seconds per oven door, excluding time spent moving around stationary obstructions or waiting for other obstructions to move from positions blocking the view of a series of doors. Extra time is allowed for each leak (a maximum of 10 additional seconds for each leaking door) for the observer to make the proper notation. A walking pace of 3 seconds per oven door has been found to be typical. Record the actual traverse time with a stopwatch. A single test run consists of two timed traverses, one for the coke side and one for the push side.

11.2.1 Various situations may arise that will prevent the observer from viewing a door or a series of doors. The observer has two options for dealing with obstructions to view: (a) Wait for the equipment to move or the fugitive emissions to dissipate before completing the traverse; or (b) skip the affected ovens and move to an unobstructed position to continue the traverse. Continue the traverse. After the completion of the traverse, if the equipment has moved or the fugitive emissions have dissipated, complete the traverse by inspecting the affected doors. Record the oven numbers and make an appropriate notation under ''Comments'' on the door area inspection sheet (Figure 303A–1).

NOTE: Extra time incurred for handling obstructions is not counted in the traverse time.

11.2.2 When batteries have sheds to control pushing emissions, conduct the inspection from outside the shed, if the shed allows such observations, or from the bench. Be aware of special safety considerations pertinent to walking on the bench and follow the instructions of company personnel on the required equipment and operations procedures. If possible, conduct the bench traverse whenever the bench is clear of the door machine and hot coke guide.

11.3 Observations. Record all the information requested at the top of the door area inspection sheet (Figure 303A–1), including the number of non-operating ovens. Record which side is being inspected, *i.e.*, coke side or push side. Other information may be recorded at the discretion of the observer, such as the location of the leak (*e.g.*, top of the door), the reason for any interruption of the traverse, or the position of the sun relative to the battery and sky conditions (*e.g.*, overcast, partly sunny, etc.).

11.3.1 Begin the test run by traversing either the coke side or the push side of the battery. After completing one side, traverse the other side.

11.3.2 During the traverse, look around the entire perimeter of each oven door. The door is considered leaking if VE are detected in the coke oven door area. The coke oven door area includes the entire area on the vertical face of a coke oven between the bench and the top of the battery and the adjacent doors on both sides. Record the oven number and make the appropriate notation on the door area inspection sheet (Figure 303A–1).

11.3.3 Do not record the following sources as door area VE:

11.3.3.1 VE from ovens with doors removed. Record the oven number and make an appropriate notation under ''Comments'';

11.3.3.2 VE from ovens where maintenance work is being conducted. Record the oven number and make an appropriate notation under ''Comments''; or

11.3.3.3 VE from hot coke that has been spilled on the bench as a result of pushing.

*12.0 Data Analysis and Calculations*

Same as Method 303, Section 12.1, 12.2, 12.3, 12.4, and 12.5.

*13.0 Method Performance* [Reserved]

*14.0 Pollution Prevention* [Reserved]

*15.0 Waste Management* [Reserved]

*16.0 References*

Same as Method 303, Section 16.0.

*17.0 Tables, Diagrams, Flowcharts, and Validation Data*

Company name: _____
Battery no.: _____
Date: _____
City, State: _____
Total no. of ovens in battery: _____
Observer name: _____
Certification expiration date: _____

Inoperable ovens: _____
Company representative(s): _____
Traverse time CS: _____
Traverse time PS: _____
Valid run (Y or N): _____

| Time traverse started/ completed | PS/CS | Door No. | Comments (No. of blocked doors, interruptions to traverse, etc.) |
|---|---|---|---|
| | | | |
| | | | |
| | | | |
| | | | |
| | | | |
| | | | |
| | | | |
| | | | |
| | | | |
| | | | |
| | | | |
| | | | |
| | | | |
| | | | |
| | | | |
| | | | |
| | | | |
| | | | |
| | | | |

Figure 303A–1. Door Area Inspection

METHOD 304A: DETERMINATION OF BIODEGRADATION RATES OF ORGANIC COMPOUNDS (VENT OPTION)

*1.0 Scope and Application*

1.1 Applicability. This method is applicable for the determination of biodegradation rates of organic compounds in an activated sludge process. The test method is designed to evaluate the ability of an aerobic biological reaction system to degrade or destroy specific components in waste streams. The method may also be used to determine the effects of changes in wastewater composition on operation. The biodegradation rates determined by utilizing this method are not representative of a full-scale system. The rates measured by this method shall be used in conjunction with the procedures listed in appendix C of this part to calculate the fraction emitted to the air versus the fraction biodegraded.

*2.0 Summary of Method*

2.1 A self-contained benchtop bioreactor system is assembled in the laboratory. A sample of mixed liquor is added and the waste stream is then fed continuously. The benchtop bioreactor is operated under conditions nearly identical to the target full-scale activated sludge process. Bioreactor temperature, dissolved oxygen concentration, average residence time in the reactor, waste composition, biomass concentration, and biomass composition of the full-scale process are the parameters which are duplicated in the benchtop bioreactor. Biomass shall be removed from the target full-scale activated sludge unit and held for no more than 4 hours prior to use in the benchtop bioreactor. If antifoaming agents are used in the full-scale system, they shall also be used in the benchtop bioreactor. The feed flowing into and the effluent exiting the benchtop bioreactor are analyzed to determine the

biodegradation rates of the target compounds. The flow rate of the exit vent is used to calculate the concentration of target compounds (utilizing Henry's law) in the exit gas stream. If Henry's law constants for the compounds of interest are not known, this method cannot be used in the determination of the biodegradation rate and Method 304B is the suggested method. The choice of analytical methodology for measuring the compounds of interest at the inlet and outlet to the benchtop bioreactor are left to the discretion of the source, except where validated methods are available.

*3.0 Definitions* [Reserved]

*4.0 Interferences* [Reserved]

*5.0 Safety*

5.1 If explosive gases are produced as a byproduct of biodegradation and could realistically pose a hazard, closely monitor headspace concentration of these gases to ensure laboratory safety. Placement of the benchtop bioreactor system inside a laboratory hood is recommended regardless of byproducts produced.

*6.0. Equipment and Supplies*

NOTE: Figure 304A–1 illustrates a typical laboratory apparatus used to measure biodegradation rates. While the following description refers to Figure 304A–1, the EPA recognizes that alternative reactor configurations, such as alternative reactor shapes and locations of probes and the feed inlet, will also meet the intent of this method. Ensure that the benchtop bioreactor system is self-contained and isolated from the atmosphere (except for the exit vent stream) by leak-checking fittings, tubing, etc.

6.1 Benchtop Bioreactor. The biological reaction is conducted in a biological oxidation reactor of at least 6 liters capacity. The benchtop bioreactor is sealed and equipped with internal probes for controlling and monitoring dissolved oxygen and internal temperature. The top of the reactor is equipped for aerators, gas flow ports, and instrumentation (while ensuring that no leaks to the atmosphere exist around the fittings).

6.2 Aeration gas. Aeration gas is added to the benchtop bioreactor through three diffusers, which are glass tubes that extend to the bottom fifth of the reactor depth. A pure oxygen pressurized cylinder is recommended in order to maintain the specified oxygen concentration. Install a blower (*e.g.*, Diaphragm Type, 15 SCFH capacity) to blow the aeration gas into the reactor diffusers. Measure the aeration gas flow rate with a rotameter (*e.g.*, 0–15 SCFH recommended). The aeration gas will rise through the benchtop bioreactor, dissolving oxygen into the mixture in the process. The aeration gas must provide sufficient agitation to keep the solids in suspension. Provide an exit for the aeration gas from the top flange of the benchtop bioreactor through a water-cooled (*e.g.*, Allihn-type) vertical condenser. Install the condenser through a gas-tight fitting in the benchtop bioreactor closure. Install a splitter which directs a portion of the gas to an exit vent and the rest of the gas through an air recycle pump back to the benchtop bioreactor. Monitor and record the flow rate through the exit vent at least 3 times per day throughout the day.

6.3 Wastewater Feed. Supply the wastewater feed to the benchtop bioreactor in a collapsible low-density polyethylene container or collapsible liner in a container (*e.g.*, 20 L) equipped with a spigot cap (collapsible containers or liners of other material may be required due to the permeability of some volatile compounds through polyethylene). Obtain the wastewater feed by sampling the wastewater feed in the target process. A representative sample of wastewater shall be obtained from the piping leading to the aeration tank. This sample may be obtained from existing sampling valves at the discharge of the wastewater feed pump, or collected from a pipe discharging to the aeration tank, or by pumping from a well-mixed equalization tank upstream from the aeration tank. Alternatively, wastewater can be pumped continuously to the laboratory apparatus from a bleed stream taken from the equalization tank of the full-scale treatment system.

6.3.1 Refrigeration System. Keep the wastewater feed cool by ice or by refrigeration to 4 °C. If using a bleed stream from the equalization tank, refrigeration is not required if the residence time in the bleed stream is less than five minutes.

6.3.2 Wastewater Feed Pump. The wastewater is pumped from the refrigerated container using a variable-speed peristaltic pump drive equipped with a peristaltic pump head. Add the feed solution to the benchtop bioreactor through a fitting on the top flange. Determine the rate of feed addition to provide a retention time in the benchtop bioreactor that is numerically equivalent to the retention time in the full-scale system. The wastewater shall be fed at a rate sufficient to achieve 90 to 100 percent of the full-scale system residence time.

6.3.3 Treated wastewater feed. The benchtop bioreactor effluent exits at the bottom of the reactor through a tube and proceeds to the clarifier.

6.4 Clarifier. The effluent flows to a separate closed clarifier that allows separation of biomass and effluent (*e.g.*, 2-liter pear-shaped glass separatory funnel, modified by removing the stopcock and adding a 25-mm OD glass tube at the bottom). Benchtop bioreactor effluent enters the clarifier through a tube inserted to a depth of 0.08 m (3 in.) through a stopper at the top of the clarifier.

System effluent flows from a tube inserted through the stopper at the top of the clarifier to a drain (or sample bottle when sampling). The underflow from the clarifier leaves from the glass tube at the bottom of the clarifier. Flexible tubing connects this fitting to the sludge recycle pump. This pump is coupled to a variable speed pump drive. The discharge from this pump is returned through a tube inserted in a port on the side of the benchtop bioreactor. An additional port is provided near the bottom of the benchtop bioreactor for sampling the reactor contents. The mixed liquor from the benchtop bioreactor flows into the center of the clarifier. The clarified system effluent separates from the biomass and flows through an exit near the top of the clarifier. There shall be no headspace in the clarifier.

6.5 Temperature Control Apparatus. Capable of maintaining the system at a temperature equal to the temperature of the full-scale system. The average temperature should be maintained within ±2 °C of the set point.

6.5.1 Temperature Monitoring Device. A resistance type temperature probe or a thermocouple connected to a temperature readout with a resolution of 0.1 °C or better.

6.5.2 Benchtop Bioreactor Heater. The heater is connected to the temperature control device.

6.6 Oxygen Control System. Maintain the dissolved oxygen concentration at the levels present in the full-scale system. Target full-scale activated sludge systems with dissolved oxygen concentration below 2 mg/L are required to maintain the dissolved oxygen concentration in the benchtop ioreactor within 0.5 mg/L of the target dissolved oxygen level. Target full-scale activated sludge systems with dissolved oxygen concentration above 2 mg/L are required to maintain the dissolved oxygen concentration in the benchtop bioreactor within 1.5 mg/L of the target dissolved oxygen concentration; however, for target full-scale activated sludge systems with dissolved oxygen concentrations above 2 mg/L, the dissolved oxygen concentration in the benchtop bioreactor may not drop below 1.5 mg/L. If the benchtop bioreactor is outside the control range, the dissolved oxygen is noted and the reactor operation is adjusted.

6.6.1 Dissolved Oxygen Monitor. Dissolved oxygen is monitored with a polarographic probe (gas permeable membrane) connected to a dissolved oxygen meter (*e.g.*, 0 to 15 mg/L, 0 to 50 °C).

6.6.2 Benchtop Bioreactor Pressure Monitor. The benchtop bioreactor pressure is monitored through a port in the top flange of the reactor. This is connected to a gauge control with a span of 13-cm water vacuum to 13-cm water pressure or better. A relay is activated when the vacuum exceeds an adjustable setpoint which opens a solenoid valve (normally closed), admitting oxygen to the system. The vacuum setpoint controlling oxygen addition to the system shall be set at approximately 2.5 ±0.5 cm water and maintained at this setting except during brief periods when the dissolved oxygen concentration is adjusted.

6.7 Connecting Tubing. All connecting tubing shall be Teflon or equivalent in impermeability. The only exception to this specification is the tubing directly inside the pump head of the wastewater feed pump, which may be Viton, Silicone or another type of flexible tubing.

NOTE: Mention of trade names or products does not constitute endorsement by the U.S. Environmental Protection Agency.

### *7.0 Reagents and Standards*

7.1 Wastewater. Obtain a representative sample of wastewater at the inlet to the full-scale treatment plant if there is an existing full-scale treatment plant (see section 6.3). If there is no existing full-scale treatment plant, obtain the wastewater sample as close to the point of determination as possible. Collect the sample by pumping the wastewater into the 20-L collapsible container. The loss of volatiles shall be minimized from the wastewater by collapsing the container before filling, by minimizing the time of filling, and by avoiding a headspace in the container after filling. If the wastewater requires the addition of nutrients to support the biomass growth and maintain biomass characteristics, those nutrients are added and mixed with the container contents after the container is filled.

7.2 Biomass. Obtain the biomass or activated sludge used for rate constant determination in the bench-scale process from the existing full-scale process or from a representative biomass culture (*e.g.*, biomass that has been developed for a future full-scale process). This biomass is preferentially obtained from a thickened acclimated mixed liquor sample. Collect the sample either by bailing from the mixed liquor in the aeration tank with a weighted container, or by collecting aeration tank effluent at the effluent overflow weir. Transport the sample to the laboratory within no more than 4 hours of collection. Maintain the biomass concentration in the benchtop bioreactor at the level of the full-scale system + 10 percent throughout the sampling period of the test method.

### *8.0 Sample Collection, Preservation, Storage, and Transport*

8.1 Benchtop Bioreactor Operation. Charge the mixed liquor to the benchtop bioreactor, minimizing headspace over the liquid surface to minimize entrainment of mixed liquor in the circulating gas. Fasten the benchtop bioreactor headplate to the reactor over the liquid surface. Maintain the

temperature of the contents of the benchtop bioreactor system at the temperature of the target full-scale system, ±2 °C, throughout the testing period. Monitor and record the temperature of the benchtop bioreactor contents at least to the nearest 0.1 °C.

8.1.1 Wastewater Storage. Collect the wastewater sample in the 20-L collapsible container. Store the container at 4 °C throughout the testing period. Connect the container to the benchtop bioreactor feed pump.

8.1.2 Wastewater Flow Rate.

8.1.2.1 The hydraulic residence time of the aeration tank is calculated as the ratio of the volume of the tank (L) to the flow rate (L/min). At the beginning of a test, the container shall be connected to the feed pump and solution shall be pumped to the benchtop bioreactor at the required flow rate to achieve the calculated hydraulic residence time of wastewater in the aeration tank.

$$Q_{test} = Q_{fs} \frac{L}{V_{fs}} \qquad \text{Eq. 304A-1}$$

Where:

$Q_{test}$ = wastewater flow rate (L/min)

$Q_{fs}$ = average flow rate of full-scale process (L/min)

$V_{fs}$ = volume of full-scale aeration tank (L)

8.1.2.2 The target flow rate in the test apparatus is the same as the flow rate in the target full-scale process multiplied by the ratio of benchtop bioreactor volume (e.g., 6 L) to the volume of the full-scale aeration tank. The hydraulic residence time shall be maintained at 90 to 100 percent of the residence time maintained in the full-scale unit. A nominal flow rate is set on the pump based on a pump calibration. Changes in the elasticity of the tubing in the pump head and the accumulation of material in the tubing affect this calibration. The nominal pumping rate shall be changed as necessary based on volumetric flow measurements. Discharge the benchtop bioreactor effluent to a wastewater storage, treatment, or disposal facility, except during sampling or flow measurement periods.

8.1.3 Sludge Recycle Rate. Set the sludge recycle rate at a rate sufficient to prevent accumulation in the bottom of the clarifier. Set the air circulation rate sufficient to maintain the biomass in suspension.

8.1.4 Benchtop Bioreactor Operation and Maintenance. Temperature, dissolved oxygen concentration, exit vent flow rate, benchtop bioreactor effluent flow rate, and air circulation rate shall be measured and recorded three times throughout each day of benchtop bioreactor operation. If other parameters (such as pH) are measured and maintained in the target full-scale unit, these parameters, where appropriate, shall be monitored and maintained to target full-scale specifications in the benchtop bioreactor. At the beginning of each sampling period (Section 8.2), sample the benchtop bioreactor contents for suspended solids analysis. Take this sample by loosening a clamp on a length of tubing attached to the lower side port. Determine the suspended solids gravimetrically by the Gooch crucible/glass fiber filter method for total suspended solids, in accordance with Standard Methods[3] or equivalent. When necessary, sludge shall be wasted from the lower side port of the benchtop bioreactor, and the volume that is wasted shall be replaced with an equal volume of the reactor effluent. Add thickened activated sludge mixed liquor as necessary to the benchtop bioreactor to increase the suspended solids concentration to the desired level. Pump this mixed liquor to the benchtop bioreactor through the upper side port (Item 24 in Figure 304A–1). Change the membrane on the dissolved oxygen probe before starting the test. Calibrate the oxygen probe immediately before the start of the test and each time the membrane is changed.

8.1.5 Inspection and Correction Procedures. If the feed line tubing becomes clogged, replace with new tubing. If the feed flow rate is not within 5 percent of target flow any time the flow rate is measured, reset pump or check the flow measuring device and measure flow rate again until target flow rate is achieved.

8.2 Test Sampling. At least two and one half hydraulic residence times after the system has reached the targeted specifications shall be permitted to elapse before the first sample is taken. Effluent samples of the clarifier discharge (Item 20 in Figure 304A–1) and the influent wastewater feed are collected in 40-mL septum vials to which two drops of 1:10 hydrochloric acid (HCl) in water have been added. Sample the clarifier discharge directly from the drain line. These samples will be composed of the entire flow from the system for a period of several minutes. Feed samples shall be taken from the feed pump suction line after temporarily stopping the benchtop bioreactor feed, removing a connector, and squeezing the collapsible feed container. Store both influent and effluent samples at 4 °C immediately

after collection and analyze within 8 hours of collection.

8.2.1 Frequency of Sampling. During the test, sample and analyze the wastewater feed and the clarifier effluent at least six times. The sampling intervals shall be separated by at least 8 hours. During any individual sampling interval, sample the wastewater feed simultaneously with or immediately after the effluent sample. Calculate the relative standard deviation (RSD) of the amount removed (*i.e.*, effluent concentration—wastewater feed concentration). The RSD values shall be <15 percent. If an RSD value is >15 percent, continue sampling and analyzing influent and effluent sets of samples until the RSD values are within specifications.

8.2.2 Sampling After Exposure of System to Atmosphere. If, after starting sampling procedures, the benchtop bioreactor system is exposed to the atmosphere (due to leaks, maintenance, etc.), allow at least one hydraulic residence time to elapse before resuming sampling.

### *9.0 Quality Control*

9.1 Dissolved Oxygen. Fluctuation in dissolved oxygen concentration may occur for numerous reasons, including undetected gas leaks, increases and decreases in mixed liquor suspended solids resulting from cell growth and solids loss in the effluent stream, changes in diffuser performance, cycling of effluent flow rate, and overcorrection due to faulty or sluggish dissolved oxygen probe response. Control the dissolved oxygen concentration in the benchtop bioreactor by changing the proportion of oxygen in the circulating aeration gas. Should the dissolved oxygen concentration drift below the designated experimental condition, bleed a small amount of aeration gas from the system on the pressure side (i.e., immediately upstream of one of the diffusers). This will create a vacuum in the system, triggering the pressure sensitive relay to open the solenoid valve and admit oxygen to the system. Should the dissolved oxygen concentration drift above the designated experimental condition, slow or stop the oxygen input to the system until the dissolved oxygen concentration approaches the correct level.

9.2 Sludge Wasting.

9.2.1 Determine the suspended solids concentration (section 8.1.4) at the beginning of a test, and once per day thereafter during the test. If the test is completed within a two day period, determine the suspended solids concentration after the final sample set is taken. If the suspended solids concentration exceeds the specified concentration, remove a fraction of the sludge from the benchtop bioreactor. The required volume of mixed liquor to remove is determined as follows:

$$V_w = V_r\left(\frac{S_m - S_s}{S_m}\right) \qquad \text{Eq. 304A-2}$$

Where:

$V_w$ is the wasted volume (Liters),
$V_r$ is the volume of the benchtop bioreactor (Liters),
$S_m$ is the measured solids (g/L), and
$S_s$ is the specified solids (g/L).

9.2.2 Remove the mixed liquor from the benchtop bioreactor by loosening a clamp on the mixed liquor sampling tube and allowing the required volume to drain to a graduated flask. Clamp the tube when the correct volume has been wasted. Replace the volume of the liquid wasted by pouring the same volume of effluent back into the benchtop bioreactor. Dispose of the waste sludge properly.

9.3 Sludge Makeup. In the event that the suspended solids concentration is lower than the specifications, add makeup sludge back into the benchtop bioreactor. Determine the amount of sludge added by the following equation:

$$V_w = V_r\left(\frac{S_s - S_m}{S_w}\right) \qquad \text{Eq. 304A-3}$$

Where:

$V_w$ is the volume of sludge to add (Liters),
$V_r$ is the volume of the benchtop bioreactor (Liters),
$S_w$ is the solids in the makeup sludge (g/L),
$S_m$ is the measured solids (g/L), and $S_s$ is the specified solids (g/L).

*10.0 Calibration and Standardization*

10.1 Wastewater Pump Calibration. Determine the wastewater flow rate by collecting the system effluent for a time period of at least one hour, and measuring the volume with a graduated cylinder. Record the collection time period and volume collected. Determine flow rate. Adjust the pump speed to deliver the specified flow rate.

10.2 Calibration Standards. Prepare calibration standards from pure certified standards in an aqueous medium. Prepare and analyze three concentrations of calibration standards for each target component (or for a mixture of components) in triplicate daily throughout the analyses of the test samples. At each concentration level, a single calibration shall be within 5 percent of the average of the three calibration results. The low and medium calibration standards shall bracket the expected concentration of the effluent (treated) wastewater. The medium and high standards shall bracket the expected influent concentration.

*11.0 Analytical Procedures*

11.1 Analysis. If the identity of the compounds of interest in the wastewater is not known, a representative sample of the wastewater shall be analyzed in order to identify all of the compounds of interest present. A gas chromatography/mass spectrometry screening method is recommended.

11.1.1 After identifying the compounds of interest in the wastewater, develop and/or use one or more analytical techniques capable of measuring each of those compounds (more than one analytical technique may be required, depending on the characteristics of the wastewater). Test Method 18, found in appendix A of 40 CFR 60, may be used as a guideline in developing the analytical technique. Purge and trap techniques may be used for analysis providing the target components are sufficiently volatile to make this technique appropriate. The limit of quantitation for each compound shall be determined (see reference 1). If the effluent concentration of any target compound is below the limit of quantitation determined for that compound, the operation of the Method 304 unit may be altered to attempt to increase the effluent concentration above the limit of quantitation. Modifications to the method shall be approved prior to the test. The request should be addressed to Method 304 contact, Emissions Measurement Center, Mail Drop 19, U.S. Environmental Protection Agency, Research Triangle Park, NC 27711.

*12.0 Data Analysis and Calculations*

12.1 Nomenclature. The following symbols are used in the calculations.

$C_i$ = Average inlet feed concentration for a compound of interest, as analyzed (mg/L)

$C_o$ = Average outlet (effluent) concentration for a compound of interest, as analyzed (mg/L)

X = Biomass concentration, mixed liquor suspended solids (g/L)

t = Hydraulic residence time in the benchtop bioreactor (hours)

V = Volume of the benchtop bioreactor (L)

Q = Flow rate of wastewater into the benchtop bioreactor, average (L/hour)

12.2 Residence Time. The hydraulic residence time of the benchtop bioreactor is equal to the ratio of the volume of the benchtop bioreactor (L) to the flow rate (L/h):

$$t = \frac{V}{Q} \qquad \text{Eq. 304A-4}$$

12.3 Rate of Biodegradation. Calculate the rate of biodegradation for each component with the following equation:

$$\text{Rate}\left(\frac{mg}{L-h}\right) = \frac{C_i - C_o}{t} \qquad \text{Eq. 304A-5}$$

12.4 First-Order Biorate Constant. Calculate the first-order biorate constant (K1) for each component with the following equation:

$$K1\left(\frac{L}{g-h}\right) = \frac{C_i - C_o}{t\,C_o\,X} \qquad \text{Eq. 304A-6}$$

12.5 Relative Standard Deviation (RSD). Determine the standard deviation of both the influent and effluent sample concentrations (S) using the following equation:

$$RSD = \frac{100}{\overline{S}}\left(\sum_{i=1}^{n}\frac{\left(S_i - \overline{S}\right)^2}{(n-1)}\right)^{1/2} \qquad \text{Eq. 304A-7}$$

12.6 Determination of Percent Air Emissions and Percent Biodegraded. Use the results from this test method and follow the applicable procedures in appendix C of 40 CFR part 63, entitled, ''Determination of the Fraction Biodegraded ($F_{bio}$) in a Biological Treatment Unit'' to determine $F_{bio}$.

*13.0 Method Performance* [Reserved]

*14.0 Pollution Prevention* [Reserved]

*15.0 Waste Management* [Reserved]

*16.0 References*

1. ''Guidelines for data acquisition and data quality evaluation in Environmental Chemistry,'' Daniel MacDoughal, Analytical Chemistry, Volume 52, p. 2242, 1980.

2. Test Method 18, 40 CFR 60, appendix A.

3. Standard Methods for the Examination of Water and Wastewater, 16th Edition, Method 209C, Total Suspended Solids Dried at 103–105 °C, APHA, 1985.

4. Water7, Hazardous Waste Treatment, Storage, and Disposal Facilities (TSDF)—Air Emission Models, U.S. Environmental Protection Agency, EPA–450/3–87–026, Review Draft, November 1989.

5. Chemdat7, Hazardous Waste Treatment, Storage, and Disposal Facilities (TSDF)—Air Emission Models, U.S. Environmental Protection Agency, EPA–450/3–87–026, Review Draft, November 1989.

*17.0 Tables, Diagrams, Flowcharts, and Validation Data*

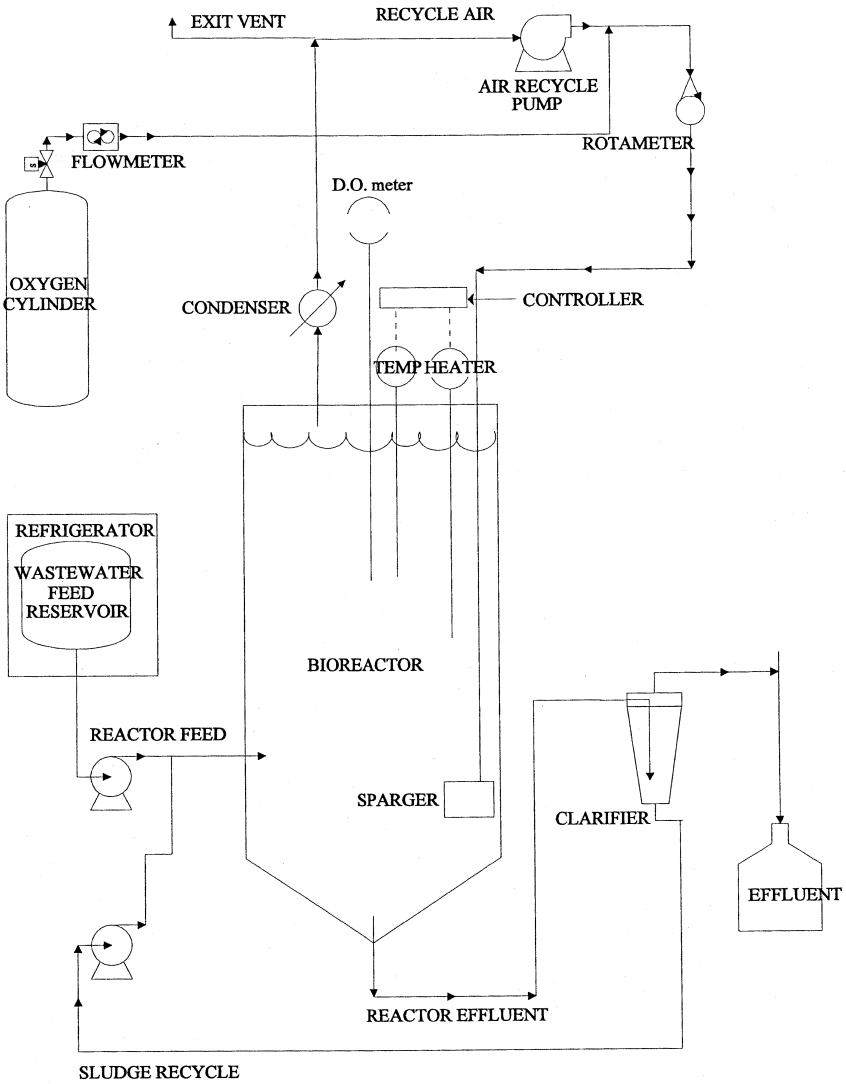


EPA METHOD 304A VENT BIOREACTOR SYSTEM

METHOD 304B: DETERMINATION OF BIODEGRADATION RATES OF ORGANIC COMPOUNDS (SCRUBBER OPTION)

*1.0 Scope and Application*

1.1 Applicability. This method is applicable for the determination of biodegradation rates of organic compounds in an activated sludge process. The test method is designed to evaluate the ability of an aerobic biological reaction system to degrade or destroy specific components in waste streams. The method may also be used to determine the effects of changes in wastewater composition on operation. The biodegradation rates determined by utilizing this method are not representative of a full-scale system. Full-scale systems embody biodegradation and air

emissions in competing reactions. This method measures biodegradation in absence of air emissions. The rates measured by this method shall be used in conjunction with the procedures listed in appendix C of this part to calculate the fraction emitted to the air versus the fraction biodegraded.

*2.0 Summary of Method*

2.1 A self-contained benchtop bioreactor system is assembled in the laboratory. A sample of mixed liquor is added and the waste stream is then fed continuously. The benchtop bioreactor is operated under conditions nearly identical to the target full-scale activated sludge process, except that air emissions are not a factor. The benchtop bioreactor temperature, dissolved oxygen concentration, average residence time in the reactor, waste composition, biomass concentration, and biomass composition of the target full-scale process are the parameters which are duplicated in the laboratory system. Biomass shall be removed from the target full-scale activated sludge unit and held for no more than 4 hours prior to use in the benchtop bioreactor. If antifoaming agents are used in the full-scale system, they shall also be used in the benchtop bioreactor. The feed flowing into and the effluent exiting the benchtop bioreactor are analyzed to determine the biodegradation rates of the target compounds. The choice of analytical methodology for measuring the compounds of interest at the inlet and outlet to the benchtop bioreactor are left to the discretion of the source, except where validated methods are available.

*3.0 Definitions* [Reserved]

*4.0 Interferences* [Reserved]

*5.0 Safety*

5.1 If explosive gases are produced as a byproduct of biodegradation and could realistically pose a hazard, closely monitor headspace concentration of these gases to ensure laboratory safety. Placement of the benchtop bioreactor system inside a laboratory hood is recommended regardless of byproducts produced.

*6.0 Equipment and Supplies*

NOTE: Figure 304B–1 illustrates a typical laboratory apparatus used to measure biodegradation rates. While the following description refers to Figure 304B–1, the EPA recognizes that alternative reactor configurations, such as alternative reactor shapes and locations of probes and the feed inlet, will also meet the intent of this method. Ensure that the benchtop bioreactor system is self-contained and isolated from the atmosphere by leak-checking fittings, tubing, etc.

6.1 Benchtop Bioreactor. The biological reaction is conducted in a biological oxidation reactor of at least 6-liters capacity. The benchtop bioreactor is sealed and equipped with internal probes for controlling and monitoring dissolved oxygen and internal temperature. The top of the benchtop bioreactor is equipped for aerators, gas flow ports, and instrumentation (while ensuring that no leaks to the atmosphere exist around the fittings).

6.2 Aeration gas. Aeration gas is added to the benchtop bioreactor through three diffusers, which are glass tubes that extend to the bottom fifth of the reactor depth. A pure oxygen pressurized cylinder is recommended in order to maintain the specified oxygen concentration. Install a blower (*e.g.*, Diaphragm Type, 15 SCFH capacity) to blow the aeration gas into the benchtop bioreactor diffusers. Measure the aeration gas flow rate with a rotameter (*e.g.*, 0–15 SCFH recommended). The aeration gas will rise through the benchtop bioreactor, dissolving oxygen into the mixture in the process. The aeration gas must provide sufficient agitation to keep the solids in suspension. Provide an exit for the aeration gas from the top flange of the benchtop bioreactor through a water-cooled (*e.g.*, Allihn-type) vertical condenser. Install the condenser through a gas-tight fitting in the benchtop bioreactor closure. Design the system so that at least 10 percent of the gas flows through an alkaline scrubber containing 175 mL of 45 percent by weight solution of potassium hydroxide (KOH) and 5 drops of 0.2 percent alizarin yellow dye. Route the balance of the gas through an adjustable scrubber bypass. Route all of the gas through a 1-L knock-out flask to remove entrained moisture and then to the intake of the blower. The blower recirculates the gas to the benchtop bioreactor.

6.3 Wastewater Feed. Supply the wastewater feed to the benchtop bioreactor in a collapsible low-density polyethylene container or collapsible liner in a container (*e.g.*, 20 L) equipped with a spigot cap (collapsible containers or liners of other material may be required due to the permeability of some volatile compounds through polyethylene). Obtain the wastewater feed by sampling the wastewater feed in the target process. A representative sample of wastewater shall be obtained from the piping leading to the aeration tank. This sample may be obtained from existing sampling valves at the discharge of the wastewater feed pump, or collected from a pipe discharging to the aeration tank, or by pumping from a well-mixed equalization tank upstream from the aeration tank. Alternatively, wastewater can be pumped continuously to the laboratory apparatus from a bleed stream taken from the equalization tank of the full-scale treatment system.

6.3.1 Refrigeration System. Keep the wastewater feed cool by ice or by refrigeration to 4 °C. If using a bleed stream from the

equalization tank, refrigeration is not required if the residence time in the bleed stream is less than five minutes.

6.3.2 Wastewater Feed Pump. The wastewater is pumped from the refrigerated container using a variable-speed peristaltic pump drive equipped with a peristaltic pump head. Add the feed solution to the benchtop bioreactor through a fitting on the top flange. Determine the rate of feed addition to provide a retention time in the benchtop bioreactor that is numerically equivalent to the retention time in the target full-scale system. The wastewater shall be fed at a rate sufficient to achieve 90 to 100 percent of the target full-scale system residence time.

6.3.3 Treated wastewater feed. The benchtop bioreactor effluent exits at the bottom of the reactor through a tube and proceeds to the clarifier.

6.4 Clarifier. The effluent flows to a separate closed clarifier that allows separation of biomass and effluent (*e.g.*, 2-liter pear-shaped glass separatory funnel, modified by removing the stopcock and adding a 25-mm OD glass tube at the bottom). Benchtop bioreactor effluent enters the clarifier through a tube inserted to a depth of 0.08 m (3 in.) through a stopper at the top of the clarifier. System effluent flows from a tube inserted through the stopper at the top of the clarifier to a drain (or sample bottle when sampling). The underflow from the clarifier leaves from the glass tube at the bottom of the clarifier. Flexible tubing connects this fitting to the sludge recycle pump. This pump is coupled to a variable speed pump drive. The discharge from this pump is returned through a tube inserted in a port on the side of the benchtop bioreactor. An additional port is provided near the bottom of the benchtop bioreactor for sampling the reactor contents. The mixed liquor from the benchtop bioreactor flows into the center of the clarifier. The clarified system effluent separates from the biomass and flows through an exit near the top of the clarifier. There shall be no headspace in the clarifier.

6.5 Temperature Control Apparatus. Capable of maintaining the system at a temperature equal to the temperature of the full-scale system. The average temperature should be maintained within ±2 °C of the set point.

6.5.1 Temperature Monitoring Device. A resistance type temperature probe or a thermocouple connected to a temperature readout with a resolution of 0.1 °C or better.

6.5.2 Benchtop Bioreactor Heater. The heater is connected to the temperature control device.

6.6 Oxygen Control System. Maintain the dissolved oxygen concentration at the levels present in the full-scale system. Target full-scale activated sludge systems with dissolved oxygen concentration below 2 mg/L are required to maintain the dissolved oxygen concentration in the benchtop bioreactor within 0.5 mg/L of the target dissolved oxygen level. Target full-scale activated sludge systems with dissolved oxygen concentration above 2 mg/L are required to maintain the dissolved oxygen concentration in the benchtop bioreactor within 1.5 mg/L of the target dissolved oxygen concentration; however, for target full-scale activated sludge systems with dissolved oxygen concentrations above 2 mg/L, the dissolved oxygen concentration in the benchtop bioreactor may not drop below 1.5 mg/L. If the benchtop bioreactor is outside the control range, the dissolved oxygen is noted and the reactor operation is adjusted.

6.6.1 Dissolved Oxygen Monitor. Dissolved oxygen is monitored with a polarographic probe (gas permeable membrane) connected to a dissolved oxygen meter (*e.g.*, 0 to 15 mg/L, 0 to 50 °C).

6.6.2 Benchtop Bioreactor Pressure Monitor. The benchtop bioreactor pressure is monitored through a port in the top flange of the reactor. This is connected to a gauge control with a span of 13-cm water vacuum to 13-cm water pressure or better. A relay is activated when the vacuum exceeds an adjustable setpoint which opens a solenoid valve (normally closed), admitting oxygen to the system. The vacuum setpoint controlling oxygen addition to the system shall be set at approximately 2.5 ±0.5 cm water and maintained at this setting except during brief periods when the dissolved oxygen concentration is adjusted.

6.7 Connecting Tubing. All connecting tubing shall be Teflon or equivalent in impermeability. The only exception to this specification is the tubing directly inside the pump head of the wastewater feed pump, which may be Viton, Silicone or another type of flexible tubing.

NOTE: Mention of trade names or products does not constitute endorsement by the U.S. Environmental Protection Agency.

### *7.0. Reagents and Standards*

7.1 Wastewater. Obtain a representative sample of wastewater at the inlet to the full-scale treatment plant if there is an existing full-scale treatment plant (See Section 6.3). If there is no existing full-scale treatment plant, obtain the wastewater sample as close to the point of determination as possible. Collect the sample by pumping the wastewater into the 20-L collapsible container. The loss of volatiles shall be minimized from the wastewater by collapsing the container before filling, by minimizing the time of filling, and by avoiding a headspace in the container after filling. If the wastewater requires the addition of nutrients to support the biomass growth and maintain biomass characteristics, those nutrients are added

and mixed with the container contents after the container is filled.

7.2 Biomass. Obtain the biomass or activated sludge used for rate constant determination in the bench-scale process from the existing full-scale process or from a representative biomass culture (*e.g.*, biomass that has been developed for a future full-scale process). This biomass is preferentially obtained from a thickened acclimated mixed liquor sample. Collect the sample either by bailing from the mixed liquor in the aeration tank with a weighted container, or by collecting aeration tank effluent at the effluent overflow weir. Transport the sample to the laboratory within no more than 4 hours of collection. Maintain the biomass concentration in the benchtop bioreactor at the level of the target full-scale system + 10 percent throughout the sampling period of the test method.

*8.0 Sample Collection, Preservation, Storage, and Transport*

8.1 Benchtop Bioreactor Operation. Charge the mixed liquor to the benchtop bioreactor, minimizing headspace over the liquid surface to minimize entrainment of mixed liquor in the circulating gas. Fasten the benchtop bioreactor headplate to the reactor over the liquid surface. Maintain the temperature of the contents of the benchtop bioreactor system at the temperature of the target full-scale system, ±2 °C, throughout the testing period. Monitor and record the temperature of the reactor contents at least to the nearest 0.1 °C.

8.1.1 Wastewater Storage. Collect the wastewater sample in the 20-L collapsible container. Store the container at 4 °C throughout the testing period. Connect the container to the benchtop bioreactor feed pump.

8.1.2 Wastewater Flow Rate.

8.1.2.1 The hydraulic residence time of the aeration tank is calculated as the ratio of the volume of the tank (L) to the flow rate (L/min). At the beginning of a test, the container shall be connected to the feed pump and solution shall be pumped to the benchtop bioreactor at the required flow rate to achieve the calculated hydraulic residence time of wastewater in the aeration tank.

$$Q_{test} = Q_{fs} \frac{L}{V_{fs}} \qquad \text{Eq. 304B-1}$$

Where:

$Q_{test}$ = wastewater flow rate (L/min)

$Q_{fs}$ = average flow rate of full-scale process (L/min)

$V_{fs}$ = volume of full-scale aeration tank (L)

8.1.2.2 The target flow rate in the test apparatus is the same as the flow rate in the target full-scale process multiplied by the ratio of benchtop bioreactor volume (*e.g.*, 6 L) to the volume of the full-scale aeration tank. The hydraulic residence time shall be maintained at 90 to 100 percent of the residence time maintained in the target full-scale unit. A nominal flow rate is set on the pump based on a pump calibration. Changes in the elasticity of the tubing in the pump head and the accumulation of material in the tubing affect this calibration. The nominal pumping rate shall be changed as necessary based on volumetric flow measurements. Discharge the benchtop bioreactor effluent to a wastewater storage, treatment, or disposal facility, except during sampling or flow measurement periods.

8.1.3 Sludge Recycle Rate. Set the sludge recycle rate at a rate sufficient to prevent accumulation in the bottom of the clarifier. Set the air circulation rate sufficient to maintain the biomass in suspension.

8.1.4 Benchtop Bioreactor Operation and Maintenance. Temperature, dissolved oxygen concentration, flow rate, and air circulation rate shall be measured and recorded three times throughout each day of testing. If other parameters (such as pH) are measured and maintained in the target full-scale unit, these parameters shall, where appropriate, be monitored and maintained to full-scale specifications in the benchtop bioreactor. At the beginning of each sampling period (section 8.2), sample the benchtop bioreactor contents for suspended solids analysis. Take this sample by loosening a clamp on a length of tubing attached to the lower side port. Determine the suspended solids gravimetrically by the Gooch crucible/glass fiber filter method for total suspended solids, in accordance with Standard Methods[3] or equivalent. When necessary, sludge shall be wasted from the lower side port of the benchtop bioreactor, and the volume that is wasted shall be replaced with an equal volume of the benchtop bioreactor effluent. Add thickened activated sludge mixed liquor as necessary to the benchtop bioreactor to increase the suspended solids concentration to the desired level. Pump this mixed liquor to the benchtop bioreactor through the upper side port (Item 24 in Figure 304B–1). Change the

membrane on the dissolved oxygen probe before starting the test. Calibrate the oxygen probe immediately before the start of the test and each time the membrane is changed. The scrubber solution shall be replaced each weekday with 175 mL 45 percent W/W KOH solution to which five drops of 0.2 percent alizarin yellow indicator in water have been added. The potassium hydroxide solution in the alkaline scrubber shall be changed if the alizarin yellow dye color changes.

8.1.5 Inspection and Correction Procedures. If the feed line tubing becomes clogged, replace with new tubing. If the feed flow rate is not within 5 percent of target flow any time the flow rate is measured, reset pump or check the flow measuring device and measure flow rate again until target flow rate is achieved.

8.2 Test Sampling. At least two and one half hydraulic residence times after the system has reached the targeted specifications shall be permitted to elapse before the first sample is taken. Effluent samples of the clarifier discharge (Item 20 in Figure 304B–1) and the influent wastewater feed are collected in 40-mL septum vials to which two drops of 1:10 hydrochloric acid (HCl) in water have been added. Sample the clarifier discharge directly from the drain line. These samples will be composed of the entire flow from the system for a period of several minutes. Feed samples shall be taken from the feed pump suction line after temporarily stopping the benchtop bioreactor feed, removing a connector, and squeezing the collapsible feed container. Store both influent and effluent samples at 4 °C immediately after collection and analyze within 8 hours of collection.

8.2.1 Frequency of Sampling. During the test, sample and analyze the wastewater feed and the clarifier effluent at least six times. The sampling intervals shall be separated by at least 8 hours. During any individual sampling interval, sample the wastewater feed simultaneously with or immediately after the effluent sample. Calculate the RSD of the amount removed (*i.e.*, effluent concentration—wastewater feed concentration). The RSD values shall be <15 percent. If an RSD value is >15 percent, continue sampling and analyzing influent and effluent sets of samples until the RSD values are within specifications.

8.2.2 Sampling After Exposure of System to Atmosphere. If, after starting sampling procedures, the benchtop bioreactor system is exposed to the atmosphere (due to leaks, maintenance, etc.), allow at least one hydraulic residence time to elapse before resuming sampling.

*9.0 Quality Control*

9.1 Dissolved Oxygen. Fluctuation in dissolved oxygen concentration may occur for numerous reasons, including undetected gas leaks, increases and decreases in mixed liquor suspended solids resulting from cell growth and solids loss in the effluent stream, changes in diffuser performance, cycling of effluent flow rate, and overcorrection due to faulty or sluggish dissolved oxygen probe response. Control the dissolved oxygen concentration in the benchtop bioreactor by changing the proportion of oxygen in the circulating aeration gas. Should the dissolved oxygen concentration drift below the designated experimental condition, bleed a small amount of aeration gas from the system on the pressure side (*i.e.*, immediately upstream of one of the diffusers). This will create a vacuum in the system, triggering the pressure sensitive relay to open the solenoid valve and admit oxygen to the system. Should the dissolved oxygen concentration drift above the designated experimental condition, slow or stop the oxygen input to the system until the dissolved oxygen concentration approaches the correct level.

9.2 Sludge Wasting.

9.2.1 Determine the suspended solids concentration (section 8.1.4) at the beginning of a test, and once per day thereafter during the test. If the test is completed within a two day period, determine the suspended solids concentration after the final sample set is taken. If the suspended solids concentration exceeds the specified concentration, remove a fraction of the sludge from the benchtop bioreactor. The required volume of mixed liquor to remove is determined as follows:

$$V_w = V_r\left(\frac{S_m - S_s}{S_m}\right) \qquad \text{Eq. 304B-2}$$

Where:

$V_w$ is the wasted volume (Liters),

$V_r$ is the volume of the benchtop bioreactor (Liters),

$S_m$ is the measured solids (g/L), and

$S_s$ is the specified solids (g/L).

9.2.2 Remove the mixed liquor from the benchtop bioreactor by loosening a clamp on the mixed liquor sampling tube and allowing the required volume to drain to a graduated

flask. Clamp the tube when the correct volume has been wasted. Replace the volume of the liquid wasted by pouring the same volume of effluent back into the benchtop bioreactor. Dispose of the waste sludge properly.

9.3 Sludge Makeup. In the event that the suspended solids concentration is lower than the specifications, add makeup sludge back into the benchtop bioreactor. Determine the amount of sludge added by the following equation:

$$V_w = V_r\left(\frac{S_s - S_m}{S_w}\right) \qquad \text{Eq. 304B-3}$$

Where:

$V_w$ is the volume of sludge to add (Liters),
$V_r$ is the volume of the benchtop bioreactor (Liters),
$S_w$ is the solids in the makeup sludge (g/L),
$S_m$ is the measured solids (g/L), and
$S_s$ is the specified solids (g/L).

*10.0 Calibration and Standardizations*

10.1 Wastewater Pump Calibration. Determine the wastewater flow rate by collecting the system effluent for a time period of at least one hour, and measuring the volume with a graduated cylinder. Record the collection time period and volume collected. Determine flow rate. Adjust the pump speed to deliver the specified flow rate.

10.2 Calibration Standards. Prepare calibration standards from pure certified standards in an aqueous medium. Prepare and analyze three concentrations of calibration standards for each target component (or for a mixture of components) in triplicate daily throughout the analyses of the test samples. At each concentration level, a single calibration shall be within 5 percent of the average of the three calibration results. The low and medium calibration standards shall bracket the expected concentration of the effluent (treated) wastewater. The medium and high standards shall bracket the expected influent concentration.

*11.0 Analytical Test Procedures*

11.1 Analysis. If the identity of the compounds of interest in the wastewater is not known, a representative sample of the wastewater shall be analyzed in order to identify all of the compounds of interest present. A gas chromatography/mass spectrometry screening method is recommended.

11.1.1 After identifying the compounds of interest in the wastewater, develop and/or use one or more analytical technique capable of measuring each of those compounds (more than one analytical technique may be required, depending on the characteristics of the wastewater). Method 18, found in appendix A of 40 CFR 60, may be used as a guideline in developing the analytical technique. Purge and trap techniques may be used for analysis providing the target components are sufficiently volatile to make this technique appropriate. The limit of quantitation for each compound shall be determined.[1] If the effluent concentration of any target compound is below the limit of quantitation determined for that compound, the operation of the Method 304 unit may be altered to attempt to increase the effluent concentration above the limit of quantitation. Modifications to the method shall be approved prior to the test. The request should be addressed to Method 304 contact, Emissions Measurement Center, Mail Drop 19, U.S. Environmental Protection Agency, Research Triangle Park, NC 27711.

*12.0 Data Analysis and Calculations*

12.1 Nomenclature. The following symbols are used in the calculations.

$C_i$ = Average inlet feed concentration for a compound of interest, as analyzed (mg/L)
$C_o$ = Average outlet (effluent) concentration for a compound of interest, as analyzed (mg/L)
X = Biomass concentration, mixed liquor suspended solids (g/L)
t = Hydraulic residence time in the benchtop bioreactor (hours)
V = Volume of the benchtop bioreactor (L)
Q = Flow rate of wastewater into the benchtop bioreactor, average (L/hour)

12.2 Residence Time. The hydraulic residence time of the benchtop bioreactor is equal to the ratio of the volume of the benchtop bioreactor (L) to the flow rate (L/h)

$$t = \frac{V}{Q} \qquad \text{Eq. 304B-4}$$

12.3 Rate of Biodegradation. Calculate the rate of biodegradation for each component with the following equation:

$$\text{Rate}\left(\frac{mg}{L-h}\right)=\frac{C_i-C_o}{t} \qquad \text{Eq. 304B-5}$$

12.4 First-Order Biorate Constant. Calculate the first-order biorate constant (K1) for each component with the following equation:

$$K1\left(\frac{L}{g-h}\right)=\frac{C_i-C_o}{tC_oX} \qquad \text{Eq. 304B-6}$$

12.5 Relative Standard Deviation (RSD). Determine the standard deviation of both the influent and effluent sample concentrations (S) using the following equation:

$$RSD=\frac{100}{\overline{S}}\left(\sum_{i=1}^{n}\frac{\left(S_i-\overline{S}\right)^2}{(n-1)}\right)^{1/2} \qquad \text{Eq. 304B-7}$$

12.6 Determination of Percent Air Emissions and Percent Biodegraded. Use the results from this test method and follow the applicable procedures in appendix C of 40 CFR Part 63, entitled, ''Determination of the Fraction Biodegraded ($F_{bio}$) in a Biological Treatment Unit'' to determine $F_{bio}$.

*13.0 Method Performance* [Reserved]

*14.0 Pollution Prevention* [Reserved]

*15.0 Waste Management* [Reserved]

*16.0 References*

1. ''Guidelines for data acquisition and data quality evaluation in Environmental Chemistry'', Daniel MacDoughal, Analytical Chemistry, Volume 52, p. 2242, 1980.

2. Test Method 18, 40 CFR 60, Appendix A.

3. Standard Methods for the Examination of Water and Wastewater, 16th Edition, Method 209C, Total Suspended Solids Dried at 103–105 °C, APHA, 1985.

4. Water—7, Hazardous Waste Treatment, Storage, and Disposal Facilities (TSDF)—Air Emission Models, U.S. Environmental Protection Agency, EPA–450/3–87–026, Review Draft, November 1989.

5. Chemdat7, Hazardous Waste Treatment, Storage, and Disposal Facilities (TSDF)—Air Emission Models, U.S. Environmental Protection Agency, EPA–450/3–87–026, Review Draft, November 1989.

*17.0 Tables, Diagrams, Flowcharts, and Validation Data*

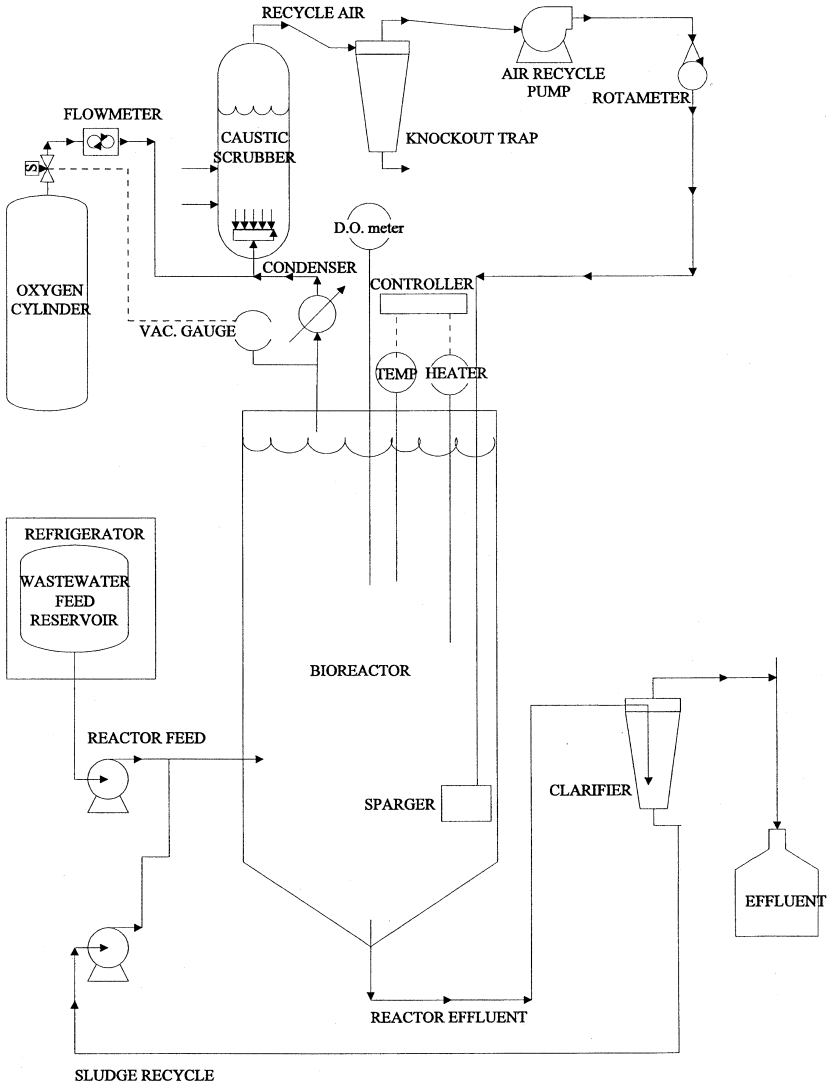


EPA METHOD 304B BIOREACTOR SYSTEM

METHOD 305: MEASUREMENT OF EMISSION POTENTIAL OF INDIVIDUAL VOLATILE ORGANIC COMPOUNDS IN WASTE

NOTE: This method does not include all of the specifications (*e.g.*, equipment and supplies) and procedures (*e.g.*, sampling and analytical) essential to its performance. Some material is incorporated by reference from other methods in 40 CFR Part 60, Appendix A. Therefore, to obtain reliable results, persons using this method should have a thorough knowledge of at least Method 25D.

*1.0 Scope and Application*

1.1 Analyte. Volatile Organics. No CAS No. assigned.

1.2 Applicability. This procedure is used to determine the emission potential of individual volatile organics (VOs) in waste.

1.3 Data Quality Objectives. Adherence to the requirements of this method will enhance the quality of the data obtained from air pollutant sampling methods.

*2.0 Summary of Method*

2.1 The heated purge conditions established by Method 25D (40 CFR Part 60, Appendix A) are used to remove VOs from a 10 gram sample of waste suspended in a 50/50 solution of polyethylene glycol (PEG) and water. The purged VOs are quantified by using the sample collection and analytical techniques (*e.g.* gas chromatography) appropriate for the VOs present in the waste. The recovery efficiency of the sample collection and analytical technique is determined for each waste matrix. A correction factor is determined for each compound (if acceptable recovery criteria requirements are met of 70 to 130 percent recovery for every target compound), and the measured waste concentration is corrected with the correction factor for each compound. A minimum of three replicate waste samples shall be analyzed.

*3.0 Definitions* [Reserved]

*4.0 Interferences* [Reserved]

*5.0 Safety*

5.1 Disclaimer. This method may involve hazardous materials, operations, and equipment. This test method may not address all of the safety problems associated with its use. It is the responsibility of the user of this test method to establish appropriate safety and health practices and to determine the applicability of regulatory limitations prior to performing this test method.

*6.0 Equipment and Supplies*

6.1 Method 25D Purge Apparatus.

6.1.1 Purge Chamber. The purge chamber shall accommodate the 10 gram sample of waste suspended in a matrix of 50 mL of PEG and 50 mL of deionized, hydrocarbon-free water. Three fittings are used on the glass chamber top. Two #7 Ace-threads are used for the purge gas inlet and outlet connections. A #50 Ace-thread is used to connect the top of the chamber to the base (see Figure 305–1). The base of the chamber has a side-arm equipped with a #22 Sovirel fitting to allow for easy sample introductions into the chamber. The dimensions of the chamber are shown in Figure 305–1.

6.1.2 Flow Distribution Device (FDD). The FDD enhances the gas-to-liquid contact for improved purging efficiency. The FDD is a 6 mm OD (0.2 in) by 30 cm (12 in) long glass tube equipped with four arm bubblers as shown in Figure 305–1. Each arm shall have an opening of 1 mm (0.04 in) in diameter.

6.1.3 Coalescing Filter. The coalescing filter serves to discourage aerosol formation of sample gas once it leaves the purge chamber. The glass filter has a fritted disc mounted 10 cm (3.9 in) from the bottom. Two #7 Ace-threads are used for the inlet and outlet connections. The dimensions of the chamber are shown in Figure 305–2.

6.1.4 Oven. A forced convection airflow oven capable of maintaining the purge chamber and coalescing filter at 75 ±2 °C (167 ±3.6 °F).

6.1.5 Toggle Valve. An on/off valve constructed from brass or stainless steel rated to 100 psig. This valve is placed in line between the purge nitrogen source and the flow controller.

6.1.6 Flow Controller. High-quality stainless steel flow controller capable of restricting a flow of nitrogen to 6 ±0.06 L/min (0.2 ±0.002 $ft^3$/min) at 40 psig.

6.1.7 Polyethylene Glycol Cleaning System.

6.1.7.1 Round-Bottom Flask. One liter, three-neck glass round-bottom flask for cleaning PEG. Standard taper 24/40 joints are mounted on each neck.

6.1.7.2 Heating Mantle. Capable of heating contents of the 1-L flask to 120 °C (248 °F).

6.1.7.3 Nitrogen Bubbler. Teflon® or glass tube, 0.25 in OD (6.35 mm).

6.1.7.4 Temperature Sensor. Partial immersion glass thermometer.

6.1.7.5 Hose Adapter. Glass with 24/40 standard tapered joint.

6.2 Volatile Organic Recovery System.

6.2.1 Splitter Valve (Optional). Stainless steel cross-pattern valve capable of splitting nominal flow rates from the purge flow of 6 L/min (0.2 $ft^3$/min). The valve shall be maintained at 75 + 2 °C (167 ±3.6 °F) in the heated zone and shall be placed downstream of the coalescing filter. It is recommended that 0.125 in OD (3.175 mm) tubing be used to direct the split vent flow from the heated zone. The back pressure caused by the 0.125 in OD (3.175 mm) tubing is critical for maintaining proper split valve operation.

NOTE: The splitter valve design is optional; it may be used in cases where the concentration of a pollutant would saturate the adsorbents.

6.2.2 Injection Port. Stainless steel ¼ in OD (6.35 mm) compression fitting tee with a 6 mm (0.2 in) septum fixed on the top port. The injection port is the point of entry for the recovery study solution. If using a gaseous standard to determine recovery efficiency, connect the gaseous standard to the injection port of the tee.

6.2.3 Knockout Trap (Optional but Recommended). A 25 mL capacity glass reservoir body with a full-stem impinger (to avoid leaks, a modified midget glass impinger with a screw cap and ball/socket clamps on the inlet and outlet is recommended). The empty

impinger is placed in an ice water bath between the injection port and the sorbent cartridge. Its purpose is to reduce the water content of the purge gas (saturated at 75 °C (167 °F)) before the sorbent cartridge.

6.2.4 Insulated Ice Bath. A 350 mL dewar or other type of insulated bath is used to maintain ice water around the knockout trap.

6.2.5 Sorbent Cartridges. Commercially available glass or stainless steel cartridge packed with one or more appropriate sorbents. The amount of adsorbent packed in the cartridge depends on the breakthrough volume of the test compounds but is limited by back pressure caused by the packing (not to exceed 7 psig). More than one sorbent cartridge placed in series may be necessary depending upon the mixture of the measured components.

6.2.6 Volumetric Glassware. Type A glass 10 mL volumetric flasks for measuring a final volume from the water catch in the knockout trap.

6.2.7 Thermal Desorption Unit. A clamshell type oven, used for the desorption of direct thermal desorption sorbent tubes. The oven shall be capable of increasing the temperature of the desorption tubes rapidly to recommended desorption temperature.

6.2.8 Ultrasonic Bath. Small bath used to agitate sorbent material and desorption solvent. Ice water shall be used in the bath because of heat transfer caused by operation of the bath.

6.2.9 Desorption Vials. Four-dram (15 mL) capacity borosilicate glass vials with Teflon-lined caps.

6.3 Analytical System. A gas chromatograph (GC) is commonly used to separate and quantify compounds from the sample collection and recovery procedure. Method 18 (40 CFR Part 60, Appendix A) may be used as a guideline for determining the appropriate GC column and GC detector based on the test compounds to be determined. Other types of analytical instrumentation may be used (HPLC) in lieu of GC systems as long as the recovery efficiency criteria of this method are met.

6.3.1 Gas Chromatograph (GC). The GC shall be equipped with a constant-temperature liquid injection port or a heated sampling loop/valve system, as appropriate. The GC oven shall be temperature-programmable over the useful range of the GC column. The choice of detectors is based on the test compounds to be determined.

6.3.2 GC Column. Select the appropriate GC column based on (1) literature review or previous experience, (2) polarity of the analytes, (3) capacity of the column, or (4) resolving power (*e.g.*, length, diameter, film thickness) required.

6.3.3 Data System. A programmable electronic integrator for recording, analyzing, and storing the signal generated by the detector.

### *7.0 Reagents and Standards*

7.1 Method 25D Purge Apparatus.

7.1.1 Polyethylene Glycol (PEG). Ninety-eight percent pure organic polymer with an average molecular weight of 400 g/mol. Volatile organics are removed from the PEG prior to use by heating to 120 ±5 °C (248 ±9 °F) and purging with pure nitrogen at 1 L/min (0.04 $ft^3$/min) for 2 hours. After purging and heating, the PEG is maintained at room temperature under a nitrogen purge maintained at 1 L/min (0.04 $ft^3$/min) until used. A typical apparatus used to clean the PEG is shown in Figure 305–3.

7.1.2 Water. Organic-free deionized water is required.

7.1.3 Nitrogen. High-purity nitrogen (less than 0.5 ppm total hydrocarbons) is used to remove test compounds from the purge matrix. The source of nitrogen shall be regulated continuously to 40 psig before the on/off toggle valve.

7.2 Volatile Organic Recovery System.

7.2.1 Water. Organic-free deionized water is required.

7.2.2 Desorption Solvent (when used). Appropriate high-purity (99.99 percent) solvent for desorption shall be used. Analysis shall be performed (utilizing the same analytical technique as that used in the analysis of the waste samples) on each lot to determine purity.

7.3 Analytical System. The gases required for GC operation shall be of the highest obtainable purity (hydrocarbon free). Consult the operating manual for recommended settings.

### *8.0 Sample Collection, Preservation, Storage, and Transport*

8.1 Assemble the glassware and associated fittings (see Figures 305–3 and 305–4, as appropriate) and leak-check the system (approximately 7 psig is the target pressure). After an initial leak check, mark the pressure gauge and use the initial checkpoint to monitor for leaks throughout subsequent analyses. If the pressure in the system drops below the target pressure at any time during analysis, that analysis shall be considered invalid.

8.2 Recovery Efficiency Determination. Determine the individual recovery efficiency (RE) for each of the target compounds in duplicate before the waste samples are analyzed. To determine the RE, generate a water blank (Section 11.1) and use the injection port to introduce a known volume of spike solution (or certified gaseous standard) containing all of the target compounds at the levels expected in the waste sample. Introduce the spike solution immediately after the nitrogen purge has been started (Section

8.3.2). Follow the procedures outlined in Section 8.3.3. Analyze the recovery efficiency samples using the techniques described in Section 11.2. Determine the recovery efficiency (Equation 305–1, Section 12.2) by comparing the amount of compound recovered to the theoretical amount spiked. Determine the RE twice for each compound; the relative standard deviation, (RSD) shall be ≤10 percent for each compound. If the RSD for any compound is not ≤10 percent, modify the sampling/analytical procedure and complete an RE study in duplicate, or continue determining RE until the RSD meets the acceptable criteria. The average RE shall be 0.70 ≤RE ≤1.30 for each compound. If the average RE does not meet these criteria, an alternative sample collection and/or analysis technique shall be developed and the recovery efficiency determination shall be repeated for that compound until the criteria are met for every target compound. Example modifications of the sampling/analytical system include changing the adsorbent material, changing the desorption solvent, utilizing direct thermal desorption of test compounds from the sorbent tubes, utilizing another analytical technique.

8.3 Sample Collection and Recovery.

8.3.1 The sample collection procedure in Method 25D shall be used to collect (into a preweighed vial) 10 g of waste into PEG, cool, and ship to the laboratory. Remove the sample container from the cooler and wipe the exterior to remove any ice or water. Weigh the container and sample to the nearest 0.01 g and record the weight. Pour the sample from the container into the purge flask. Rinse the sample container three times with approximately 6 mL of PEG (or the volume needed to total 50 mL of PEG in the purge flask), transferring the rinses to the purge flask. Add 50 mL of organic-free deionized water to the purge flask. Cap the purge flask tightly in between each rinse and after adding all the components into the flask.

8.3.2 Allow the oven to equilibrate to 75 ±2 °C (167 ±3.6 °F). Begin the sample recovery process by turning the toggle valve on, thus allowing a 6 L/min flow of pure nitrogen through the purge chamber.

8.3.3 Stop the purge after 30 min. Immediately remove the sorbent tube(s) from the apparatus and cap both ends. Remove the knockout trap and transfer the water catch to a 10 mL volumetric flask. Rinse the trap with organic-free deionized water and transfer the rinse to the volumetric flask. Dilute to the 10 mL mark with water. Transfer the water sample to a sample vial and store at 4 °C (39.2 °F) with zero headspace. The analysis of the contents of the water knockout trap is optional for this method. If the target compounds are water soluble, analysis of the water is recommended; meeting the recovery efficiency criteria in these cases would be difficult without adding the amount captured in the knockout trap.

*9.0 Quality Control*

9.1 Miscellaneous Quality Control Measures.

| Section | Quality control measure | Effect |
|---|---|---|
| 8.1 | Sampling equipment leak-check | Ensures accurate measurement of sample volume. |
| 8.2 | Recovery efficiency (RE) determination for each measured compound.. | Ensures accurate sample collection and analysis. |
| 8.3 | Calibration of analytical instrument with at least 3 calibration standards.. | Ensures linear measurement of compounds over the instrument span. |

*10.0 Calibration and Standardization*

10.1 The analytical instrument shall be calibrated with a minimum of three levels of standards for each compound whose concentrations bracket the concentration of test compounds from the sorbent tubes. Liquid calibration standards shall be used for calibration in the analysis of the solvent extracts. The liquid calibration standards shall be prepared in the desorption solvent matrix. The calibration standards may be prepared and injected individually or as a mixture. If thermal desorption and focusing (onto another sorbent or cryogen focusing) are used, a certified gaseous mixture or a series of gaseous standards shall be used for calibration of the instrument. The gaseous standards shall be focused and analyzed in the same manner as the samples.

10.2 The analytical system shall be certified free from contaminants before a calibration is performed (see Section 11.1). The calibration standards are used to determine the linearity of the analytical system. Perform an initial calibration and linearity check by analyzing the three calibration standards for each target compound in triplicate starting with the lowest level and continuing to the highest level. If the triplicate analyses do not agree within 5 percent of their average, additional analyses will be needed until the 5 percent criteria is met. Calculate the response factor (Equation 305–3, Section 12.4) from the average area counts of the injections for each concentration level. Average the response factors of the standards for each compound. The linearity of the detector is acceptable if the response

factor of each compound at a particular concentration is within 10 percent of the overall mean response factor for that compound. Analyze daily a mid-level calibration standard in duplicate and calculate a new response factor. Compare the daily response factor average to the average response factor calculated for the mid-level calibration during the initial linearity check; repeat the three-level calibration procedure if the daily average response factor differs from the initial linearity check mid-level response factor by more than 10 percent. Otherwise, proceed with the sample analysis.

*11.0 Analytical Procedure*

11.1 Water Blank Analysis. A water blank shall be analyzed daily to determine the cleanliness of the purge and recovery system. A water blank is generated by adding 60 mL of organic-free deionized water to 50 mL of PEG in the purge chamber. Treat the blank as described in Sections 8.3.2 and 8.3.3. The purpose of the water blank is to insure that no contaminants exist in the sampling and analytical apparatus which would interfere with the quantitation of the target compounds. If contaminants are present, locate the source of contamination, remove it, and repeat the water blank analysis.

11.2 Sample Analysis. Sample analysis in the context of this method refers to techniques to remove the target compounds from the sorbent tubes, separate them using a chromatography technique, and quantify them with an appropriate detector. Two types of sample extraction techniques typically used for sorbents include solvent desorption or direct thermal desorption of test compounds to a secondary focusing unit (either sorbent or cryogen based). The test compounds are then typically transferred to a GC system for analysis. Other analytical systems may be used (e.g., HPLC) in lieu of GC systems as long as the recovery efficiency criteria of this method are met.

11.2.1 Recover the test compounds from the sorbent tubes that require solvent desorption by transferring the adsorbent material to a sample vial containing the desorption solvent. The desorption solvent shall be the same as the solvent used to prepare calibration standards. The volume of solvent depends on the amount of adsorbed material to be desorbed (1.0 mL per 100 mg of adsorbent material) and also on the amount of test compounds present. Final volume adjustment and or dilution can be made so that the concentration of test compounds in the desorption solvent is bracketed by the concentration of the calibration solutions. Ultrasonicate the desorption solvent for 15 min in an ice bath. Allow the sample to sit for a period of time so that the adsorbent material can settle to the bottom of the vial. Transfer the solvent with a pasteur pipet (minimizing the amount of adsorbent material taken) to another vial and store at 4 °C (39.2 °F).

11.2.2 Analyze the desorption solvent or direct thermal desorption tubes from each sample using the same analytical parameters used for the calibration standard. Calculate the total weight detected for each compound (Equation 305–4, Section 12.5). The slope (area/amount) and y-intercept are calculated from the line bracketed between the two closest calibration points. Correct the concentration of each waste sample with the appropriate recovery efficiency factor and the split flow ratio (if used). The final concentration of each individual test compound is calculated by dividing the corrected measured weight for that compound by the weight of the original sample determined in Section 8.3.1 (Equation 305–5, Section 12.6).

11.2.3 Repeat the analysis for the three samples collected in Section 8.3. Report the corrected concentration of each of the waste samples, average waste concentration, and relative standard deviation (Equation 305–6, Section 12.7).

*12.0 Data Analysis and Calculations.*

12.1 Nomenclature.

$A_S$ = Mean area counts of test compound in standard.

$A_U$ = Mean area counts of test compound in sample desorption solvent.

b = Y-intercept of the line formed between the two closest calibration standards that bracket the concentration of the sample.

$C_T$ = Amount of test compound (μg) in calibration standard.

$C_F$ = Correction for adjusting final amount of sample detected for losses during individual sample runs.

$F_P$ = Nitrogen flow through the purge chamber (6 L/min).

$F_S$ = Nitrogen split flow directed to the sample recovery system (use 6 L/min if split flow design was not used).

PPM = Final concentration of test compound in waste sample [μg/g (which is equivalent to parts per million by weight (ppmw))].

RE = Recovery efficiency for adjusting final amount of sample detected for losses due to inefficient trapping and desorption techniques.

R.F. = Response factor for test compound, calculated from a calibration standard.

S = Slope of the line (area counts/$C_T$) formed between two closest calibration points that bracket the concentration of the sample.

$W_C$ = Weight of test compound expected to be recovered in spike solution based on theoretical amount (μg).

$W_E$ = Weight of vial and PEG (g).

$W_F$ = Weight of vial, PEG and waste sample (g).
$W_S$ = Weight of original waste sample (g).
$W_T$ = Corrected weight of test compound measured (μg) in sample.
$W_X$ = Weight of test compound measured during analysis of recovery efficiency spike samples (μg).

12.2 Recovery efficiency for determining trapping/desorption efficiency of individual test compounds in the spike solution, decimal value.

$$RE = \frac{W_X}{W_C} \qquad \text{Eq. 305-1}$$

12.3 Weight of waste sample (g).

$$W_S = W_F - W_E \qquad \text{Eq. 305-2}$$

12.4 Response factor for individual test compounds.

$$RF = \frac{C_T}{A_S} \qquad \text{Eq. 305-3}$$

12.5 Corrected weight of a test compound in the sample, in μg.

$$W_T = \frac{A_u - b}{S} \times \frac{1}{RE} \times \frac{F_p}{F_s} \qquad \text{Eq. 305-4}$$

12.6 Final concentration of a test compound in the sample in ppmw.

$$PPM = \frac{W_T}{W_S} \qquad \text{Eq. 305-5}$$

12.7 Relative standard deviation (RSD) calculation.

$$RSD = \frac{100}{\overline{PPM}} \sqrt{\frac{\sum_{i=1}^{n} \left(PPM_i - \overline{PPM}\right)^2}{n-1}} \qquad \text{Eq. 305-6}$$

*13.0 Method Performance* [Reserved]

*14.0 Pollution Prevention* [Reserved]

*15.0 Waste Management* [Reserved]

*16.0 References* [Reserved]

*17.0 Tables, Diagrams, Flowcharts, and Validation Data*

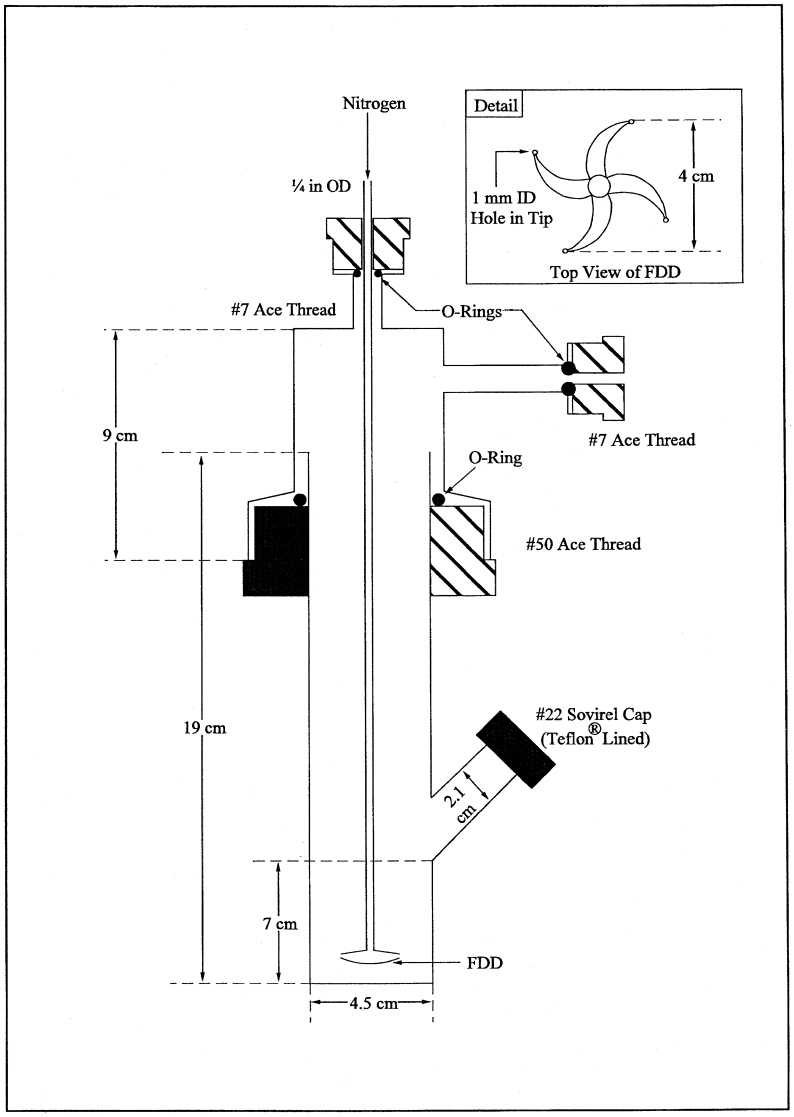


Figure 305-1. Schematic of Purge Chamber.

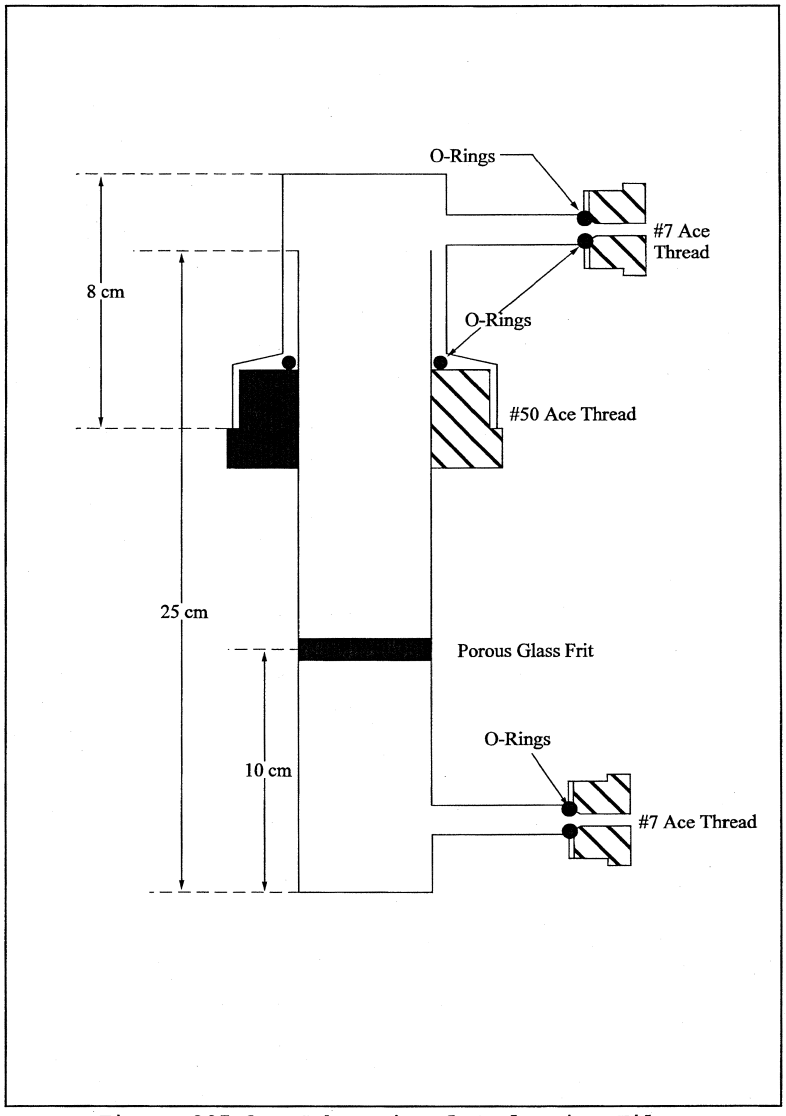


Figure 305-2. Schematic of Coalescing Filter.

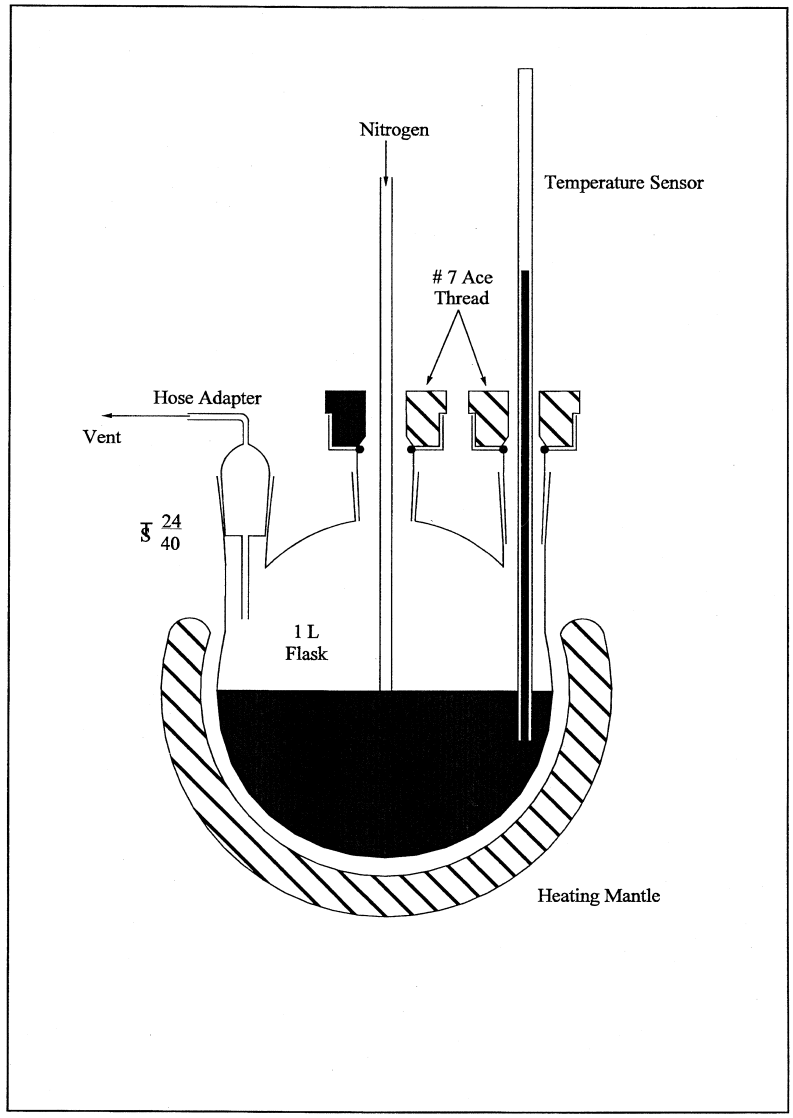


Figure 305-3. Schematic of PEG Cleaning System.

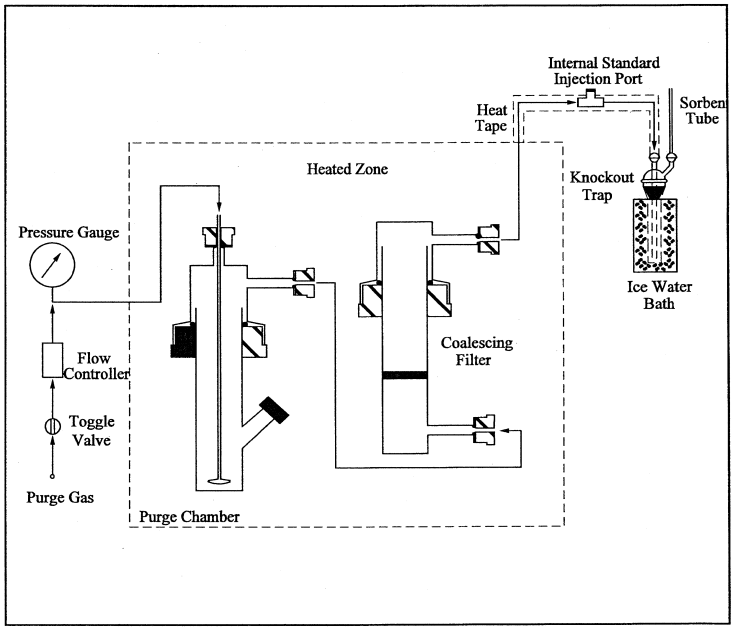


Figure 305-4. Schematic of Purge and Recovery Apparatus.

METHOD 306—DETERMINATION OF CHROMIUM EMISSIONS FROM DECORATIVE AND HARD CHROMIUM ELECTROPLATING AND CHROMIUM ANODIZING OPERATIONS—ISOKINETIC METHOD

NOTE: This method does not include all of the specifications (*e.g.*, equipment and supplies) and procedures (*e.g.*, sampling and analytical) essential to its performance. Some material is incorporated by reference from other methods in 40 CFR Part 60, Appendix A. Therefore, to obtain reliable results, persons using this method should have a thorough knowledge of at least Method 5.

*1.0 Scope and Application*

1.1 Analytes.

| Analyte | CAS No. | Sensitivity |
|---|---|---|
| Chromium | 7440–47–3 | See Sec. 13.2. |

1.2 Applicability. This method applies to the determination of chromium (Cr) in emissions from decorative and hard chrome electroplating facilities, chromium anodizing operations, and continuous chromium plating operations at iron and steel facilities.

1.3 Data Quality Objectives. [Reserved]

*2.0 Summary of Method*

2.1 Sampling. An emission sample is extracted isokinetically from the source using an unheated Method 5 sampling train (40 CFR Part 60, Appendix A), with a glass nozzle and probe liner, but with the filter omitted. The sample time shall be at least two hours. The Cr emissions are collected in an alkaline solution containing 0.1 N sodium hydroxide (NaOH) or 0.1 N sodium bicarbonate ($NaHCO_3$). The collected samples are recovered using an alkaline solution and are then transported to the laboratory for analysis.

2.2 Analysis.

2.2.1 Total chromium samples with high chromium concentrations (≥35 μg/L) may be analyzed using inductively coupled plasma emission spectrometry (ICP) at 267.72 nm.

NOTE: The ICP analysis is applicable for this method only when the solution analyzed has a Cr concentration greater than or equal to 35 μg/L or five times the method detection limit as determined according to appendix B in 40 CFR part 136. Similarly, inductively coupled plasma-mass spectroscopy (ICP–MS)

may be used for total chromium analysis provided the procedures for ICP–MS analysis described in Method 6020 or 6020A (EPA Office of Solid Waste, publication SW–846) are followed.

2.2.2 Alternatively, when lower total chromium concentrations (<35 μg/L) are encountered, a portion of the alkaline sample solution may be digested with nitric acid and analyzed by graphite furnace atomic absorption spectroscopy (GFAAS) at 357.9 nm.

2.2.3 If it is desirable to determine hexavalent chromium ($Cr^{+6}$) emissions, the samples may be analyzed using an ion chromatograph equipped with a post-column reactor (IC/PCR) and a visible wavelength detector. To increase sensitivity for trace levels of $Cr^{+6}$, a preconcentration system may be used in conjunction with the IC/PCR.

*3.0 Definitions*

3.1 *Total Chromium*—measured chromium content that includes both major chromium oxidation states ($Cr^{+3}$, $Cr^{+3}$).

3.2 *May*—Implies an optional operation.

3.3 *Digestion*—The analytical operation involving the complete (or nearly complete) dissolution of the sample in order to ensure the complete solubilization of the element (analyte) to be measured.

3.4 *Interferences*—Physical, chemical, or spectral phenomena that may produce a high or low bias in the analytical result.

3.5 *Analytical System*—All components of the analytical process including the sample digestion and measurement apparatus.

3.6 *Sample Recovery*—The quantitative transfer of sample from the collection apparatus to the sample preparation (digestion, etc.) apparatus. This term should not be confused with analytical recovery.

3.7 *Matrix Modifier*—A chemical modification to the sample during GFAAS determinations to ensure that the analyte is not lost during the measurement process (prior to the atomization stage)

3.8 *Calibration Reference Standards*—Quality control standards used to check the accuracy of the instrument calibration curve prior to sample analysis.

3.9 *Continuing Check Standard*—Quality control standards used to verify that unacceptable drift in the measurement system has not occurred.

3.10 *Calibration Blank*—A blank used to verify that there has been no unacceptable shift in the baseline either immediately following calibration or during the course of the analytical measurement.

3.11 *Interference Check*—An analytical/measurement operation that ascertains whether a measurable interference in the sample exists.

3.12 *Interelement Correction Factors*—Factors used to correct for interfering elements that produce a false signal (high bias).

3.13 *Duplicate Sample Analysis*—Either the repeat measurement of a single solution or the measurement of duplicate preparations of the same sample. It is important to be aware of which approach is required for a particular type of measurement. For example, no digestion is required for the ICP determination and the duplicate instrument measurement is therefore adequate whereas duplicate digestion/instrument measurements are required for GFAAS.

3.14 *Matrix Spiking*—Analytical spikes that have been added to the actual sample matrix either before (Section 9.2.5.2) or after (Section 9.1.6). Spikes added to the sample *prior* to a preparation technique (*e.g.*, digestion) allow for the assessment of an overall method accuracy while those added *after* only provide for the *measurement* accuracy determination.

*4.0 Interferences*

4.1 ICP Interferences.

4.1.1 ICP Spectral Interferences. Spectral interferences are caused by: overlap of a spectral line from another element; unresolved overlap of molecular band spectra; background contribution from continuous or recombination phenomena; and, stray light from the line emission of high-concentrated elements. Spectral overlap may be compensated for by correcting the raw data with a computer and measuring the interfering element. At the 267.72 nm Cr analytical wavelength, iron, manganese, and uranium are potential interfering elements. Background and stray light interferences can usually be compensated for by a background correction adjacent to the analytical line. Unresolved overlap requires the selection of an alternative chromium wavelength. Consult the instrument manufacturer's operation manual for interference correction procedures.

4.1.2 ICP Physical Interferences. High levels of dissolved solids in the samples may cause significant inaccuracies due to salt buildup at the nebulizer and torch tips. This problem can be controlled by diluting the sample or by extending the rinse times between sample analyses. Standards shall be prepared in the same solution matrix as the samples (*i.e.*, 0.1 N NaOH or 0.1 N $NaHCO_3$).

4.1.3 ICP Chemical Interferences. These include molecular compound formation, ionization effects and solute vaporization effects, and are usually not significant in the ICP procedure, especially if the standards and samples are matrix matched.

4.2 GFAAS Interferences.

4.2.1 GFAAS Chemical Interferences. Low concentrations of calcium and/or phosphate may cause interferences; at concentrations above 200 μg/L, calcium's effect is constant

and eliminates the effect of phosphate. Calcium nitrate is therefore added to the concentrated analyte to ensure a known constant effect. Other matrix modifiers recommended by the instrument manufacturer may also be considered.

4.2.2 GFAAS Cyanide Band Interferences. Nitrogen should not be used as the purge gas due to cyanide band interference.

4.2.3 GFAAS Spectral Interferences. Background correction may be required because of possible significant levels of nonspecific absorption and scattering at the 357.9 nm analytical wavelength.

4.2.4 GFAAS Background Interferences. Zeeman or Smith-Hieftje background correction is recommended for interferences resulting from high levels of dissolved solids in the alkaline impinger solutions.

4.3 IC/PCR Interferences.

4.3.1 IC/PCR Chemical Interferences. Components in the sample matrix may cause $Cr^{+6}$ to convert to trivalent chromium ($Cr^{+3}$) or cause $Cr^{+3}$ to convert to $Cr^{+6}$. The chromatographic separation of $Cr^{+6}$ using ion chromatography reduces the potential for other metals to interfere with the post column reaction. For the IC/PCR analysis, only compounds that coelute with $Cr^{+6}$ and affect the diphenylcarbazide reaction will cause interference.

4.3.2 IC/PCR Background Interferences. Periodic analyses of reagent water blanks are used to demonstrate that the analytical system is essentially free of contamination. Sample cross-contamination can occur when high-level and low-level samples or standards are analyzed alternately and can be eliminated by thorough purging of the sample loop. Purging of the sample can easily be achieved by increasing the injection volume to ten times the size of the sample loop.

### *5.0 Safety*

5.1 Disclaimer. This method may involve hazardous materials, operations, and equipment. This test method may not address all of the safety problems associated with its use. It is the responsibility of the user to establish appropriate safety and health practices and to determine the applicability of regulatory limitations prior to performing this test method.

5.2 Hexavalent chromium compounds have been listed as carcinogens although chromium (III) compounds show little or no toxicity. Chromium can be a skin and respiratory irritant.

### *6.0 Equipment and Supplies*

6.1 Sampling Train.

6.1.1 A schematic of the sampling train used in this method is shown in Figure 306–1. The train is the same as shown in Method 5, Section 6.0 (40 CFR Part 60, Appendix A) except that the probe liner is unheated, the particulate filter is omitted, and quartz or borosilicate glass must be used for the probe nozzle and liner in place of stainless steel.

6.1.2 Probe fittings of plastic such as Teflon, polypropylene, etc. are recommended over metal fittings to prevent contamination. If desired, a single combined probe nozzle and liner may be used, but such a single glass assembly is not a requirement of this methodology.

6.1.3 Use 0.1 N NaOH or 0.1 N $NaHCO_3$ in the impingers in place of water.

6.1.4 Operating and maintenance procedures for the sampling train are described in APTD–0576 of Method 5. Users should read the APTD–0576 document and adopt the outlined procedures. Alternative mercury-free thermometers may be used if the thermometers are, at a minimum, equivalent in terms of performance or suitably effective for the specific temperature measurement application.

6.1.5 Similar collection systems which have been approved by the Administrator may be used.

6.2 Sample Recovery. Same as Method 5, [40 CFR Part 60, Appendix A], with the following exceptions:

6.2.1 Probe-Liner and Probe-Nozzle Brushes. Brushes are not necessary for sample recovery. If a probe brush is used, it must be non-metallic.

6.2.2 Sample Recovery Solution. Use 0.1 N NaOH or 0.1 N $NaHCO_3$, whichever is used as the impinger absorbing solution, in place of acetone to recover the sample.

6.2.3 Sample Storage Containers. Polyethylene, with leak-free screw cap, 250 mL, 500 mL or 1,000 mL.

6.3 Analysis.

6.3.1 General. For analysis, the following equipment is needed.

6.3.1.1 Phillips Beakers. (Phillips beakers are preferred, but regular beakers may also be used.)

6.3.1.2 Hot Plate.

6.3.1.3 Volumetric Flasks. Class A, various sizes as appropriate.

6.3.1.4 Assorted Pipettes.

6.3.2 Analysis by ICP.

6.3.2.1 ICP Spectrometer. Computer-controlled emission spectrometer with background correction and radio frequency generator.

6.3.2.2 Argon Gas Supply. Welding grade or better.

6.3.3 Analysis by GFAAS.

6.3.3.1 Chromium Hollow Cathode Lamp or Electrodeless Discharge Lamp.

6.3.3.2 Graphite Furnace Atomic Absorption Spectrophotometer.

6.3.3.3 Furnace Autosampler.

6.3.4 Analysis by IC/PCR.

6.3.4.1 IC/PCR System. High performance liquid chromatograph pump, sample injection valve, post-column reagent delivery and

mixing system, and a visible detector, capable of operating at 520 nm-540 nm, all with a non-metallic (or inert) flow path. An electronic peak area mode is recommended, but other recording devices and integration techniques are acceptable provided the repeatability criteria and the linearity criteria for the calibration curve described in Section 10.4 can be satisfied. A sample loading system is required if preconcentration is employed.

6.3.4.2 Analytical Column. A high performance ion chromatograph (HPIC) non-metallic column with anion separation characteristics and a high loading capacity designed for separation of metal chelating compounds to prevent metal interference. Resolution described in Section 11.6 must be obtained. A non-metallic guard column with the same ion-exchange material is recommended.

6.3.4.3 Preconcentration Column (for older instruments). An HPIC non-metallic column with acceptable anion retention characteristics and sample loading rates must be used as described in Section 11.6.

6.3.4.4 Filtration Apparatus for IC/PCR.

6.3.4.4.1 Teflon, or equivalent, filter holder to accommodate 0.45-µm acetate, or equivalent, filter, if needed to remove insoluble particulate matter.

6.3.4.4.2 0.45-µm Filter Cartridge. For the removal of insoluble material. To be used just prior to sample injection/analysis.

*7.0 Reagents and Standards*

NOTE: Unless otherwise indicated, all reagents should conform to the specifications established by the Committee on Analytical Reagents of the American Chemical Society (ACS reagent grade). Where such specifications are not available, use the best available grade. Reagents should be checked by the appropriate analysis prior to field use to assure that contamination is below the analytical detection limit for the ICP or GFAAS total chromium analysis; and that contamination is below the analytical detection limit for $Cr^{+6}$ using IC/PCR for direct injection or, if selected, preconcentration.

7.1 Sampling.

7.1.1 Water. Reagent water that conforms to ASTM Specification D1193–77 or 91 Type II (incorporated by reference see §63.14). All references to water in the method refer to reagent water unless otherwise specified. It is recommended that water blanks be checked prior to preparing the sampling reagents to ensure that the Cr content is less than three (3) times the anticipated detection limit of the analytical method.

7.1.2 Sodium Hydroxide (NaOH) Absorbing Solution, 0.1 N. Dissolve 4.0 g of sodium hydroxide in 1 liter of water to obtain a pH of approximately 8.5.

7.1.3 Sodium Bicarbonate ($NaHCO_3$) Absorbing Solution, 0.1 N. Dissolve approximately 8.5 g of sodium bicarbonate in 1 liter of water to obtain a pH of approximately 8.3.

7.1.4 Chromium Contamination.

7.1.4.1 The absorbing solution shall not exceed the QC criteria noted in Section 7.1.1 (≤3 times the instrument detection limit).

7.1.4.2 When the $Cr^{+6}$ content in the field samples exceeds the blank concentration by at least a factor of ten (10), $Cr^{+6}$ blank concentrations ≥10 times the detection limit will be allowed.

NOTE: At sources with high concentrations of acids and/or $SO_2$, the concentration of NaOH or $NaHCO_3$ should be ≥0.5 N to insure that the pH of the solution remains at or above 8.5 for NaOH and 8.0 for $NaHCO_3$ during and after sampling.

7.1.5 Silica Gel. Same as in Method 5.

7.2 Sample Recovery.

7.2.1 0.1 N NaOH or 0.1 N $NaHCO_3$. Use the same solution for the sample recovery that is used for the impinger absorbing solution.

7.2.2 pH Indicator Strip, for IC/PCR. pH indicator capable of determining the pH of solutions between the pH range of 7 and 12, at 0.5 pH increments.

7.3 Sample Preparation and Analysis.

7.3.1 Nitric Acid ($HNO_3$), Concentrated, for GFAAS. Trace metals grade or better $HNO_3$ must be used for reagent preparation. The ACS reagent grade $HNO_3$ is acceptable for cleaning glassware.

7.3.2 $HNO_3$, 1.0% (v/v), for GFAAS. Prepare, by slowly stirring, 10 mL of concentrated $HNO_3$) into 800 mL of reagent water. Dilute to 1,000 mL with reagent water. The solution shall contain less than 0.001 mg Cr/L.

7.3.3 Calcium Nitrate $Ca(NO_3)_2$ Solution (10 µg Ca/mL) for GFAAS analysis. Prepare the solution by weighing 40.9 mg of $Ca(NO_3)_2$ into a 1 liter volumetric flask. Dilute with reagent water to 1 liter.

7.3.4 Matrix Modifier, for GFAAS. See instrument manufacturer's manual for suggested matrix modifier.

7.3.5 Chromatographic Eluent, for IC/PCR. The eluent used in the analytical system is ammonium sulfate based.

7.3.5.1 Prepare by adding 6.5 mL of 29 percent ammonium hydroxide ($NH_4OH$) and 33 g of ammonium sulfate ($(NH_4)_2SO_4$) to 500 mL of reagent water. Dilute to 1 liter with reagent water and mix well.

7.3.5.2 Other combinations of eluents and/or columns may be employed provided peak resolution, repeatability, linearity, and analytical sensitivity as described in Sections 9.3 and 11.6 are acceptable.

7.3.6 Post-Column Reagent, for IC/PCR. An effective post-column reagent for use with the chromatographic eluent described in Section 7.3.5 is a diphenylcarbazide (DPC)-based system. Dissolve 0.5 g of 1,5-

diphenylcarbazide in 100 mL of ACS grade methanol. Add 500 mL of reagent water containing 50 mL of 96 percent spectrophotometric grade sulfuric acid. Dilute to 1 liter with reagent water.

7.3.7 Chromium Standard Stock Solution (1000 mg/L). Procure a certified aqueous standard or dissolve 2.829 g of potassium dichromate ($K_2Cr_2O_7$), in reagent water and dilute to 1 liter.

7.3.8 Calibration Standards for ICP or IC/PCR. Prepare calibration standards for ICP or IC/PCR by diluting the Cr standard stock solution (Section 7.3.7) with 0.1 N NaOH or 0.1 N $NaHCO_3$, whichever is used as the impinger absorbing solution, to achieve a matrix similar to the actual field samples. Suggested levels are 0, 50, 100, and 200 µg Cr/L for ICP, and 0, 1, 5, and 10 µg $Cr^{+6}$/L for IC/PCR.

7.3.9 Calibration Standards for GFAAS. Chromium solutions for GFAAS calibration shall contain 1.0 percent (v/v) $HNO_3$. The zero standard shall be 1.0 percent (v/v) $HNO_3$. Calibration standards should be prepared daily by diluting the Cr standard stock solution (Section 7.3.7) with 1.0 percent $HNO_3$. Use at least four standards to make the calibration curve. Suggested levels are 0, 10, 50, and 100 µg Cr/L.

7.4 Glassware Cleaning Reagents.

7.4.1 $HNO_3$, Concentrated. ACS reagent grade or equivalent.

7.4.2 Water. Reagent water that conforms to ASTM Specification D1193–77 or 91 Type II.

7.4.3 $HNO_3$, 10 percent (v/v). Add by stirring 500 mL of concentrated $HNO_3$ into a flask containing approximately 4,000 mL of reagent water. Dilute to 5,000 mL with reagent water. Mix well. The reagent shall contain less than 2 µg Cr/L.

### *8.0 Sample Collection, Preservation, Holding Times, Storage, and Transport*

NOTE: Prior to sample collection, consideration should be given to the type of analysis ($Cr^{+6}$ or total Cr) that will be performed. Which analysis option(s) will be performed will determine which sample recovery and storage procedures will be required to process the sample.

8.1 Sample Collection. Same as Method 5 (40 CFR part 60, appendix A), with the following exceptions.

8.1.1 Omit the particulate filter and filter holder from the sampling train. Use a glass nozzle and probe liner instead of stainless steel. Do not heat the probe. Place 100 mL of 0.1 N NaOH or 0.1 N $NaHCO_3$ in each of the first two impingers, and record the data for each run on a data sheet such as shown in Figure 306–2.

8.1.2 Clean all glassware prior to sampling in hot soapy water designed for laboratory cleaning of glassware. Next, rinse the glassware three times with tap water, followed by three additional rinses with reagent water. Then soak the glassware in 10% (v/v) $HNO_3$ solution for a minimum of 4 hours, rinse three times with reagent water, and allow to air dry. Cover all glassware openings where contamination can occur with Parafilm, or equivalent, until the sampling train is assembled for sampling.

8.1.3 Train Operation. Follow the basic procedures outlined in Method 5 in conjunction with the following instructions. Train sampling rate shall not exceed 0.030 $m^3$/min (1.0 cfm) during a run.

8.2 Sample Recovery. Follow the basic procedures of Method 5, with the exceptions noted.

8.2.1 A particulate filter is not recovered from this train.

8.2.2 Tester shall select either the total Cr or $Cr^{+6}$ sample recovery option.

8.2.3 Samples to be analyzed for both total Cr and $Cr^{+6}$, shall be recovered using the $Cr^{+6}$ sample option (Section 8.2.6).

8.2.4 A field reagent blank shall be collected for either of the Cr or the $Cr^{+6}$ analysis. If both analyses (Cr and $Cr^{+6}$) are to be conducted on the samples, collect separate reagent blanks for each analysis.

NOTE: Since particulate matter is not usually present at chromium electroplating and/or chromium anodizing operations, it is not necessary to filter the $Cr^{+6}$ samples unless there is observed sediment in the collected solutions. If it is necessary to filter the $Cr^{+6}$ solutions, please refer to Method 0061, Determination of Hexavalent Chromium Emissions From Stationary Sources, Section 7.4, Sample Preparation in SW–846 (see Reference 1).

8.2.5 Total Cr Sample Option.

8.2.5.1 Container No. 1. Measure the volume of the liquid in the first, second, and third impingers and quantitatively transfer into a labeled sample container.

8.2.5.2 Use approximately 200 to 300 mL of the 0.1 N NaOH or 0.1 N $NaHCO_3$ absorbing solution to rinse the probe nozzle, probe liner, three impingers, and connecting glassware; add this rinse to Container No. 1.

8.2.6 $Cr^{+6}$ Sample Option.

8.2.6.1 Container No. 1. Measure and record the pH of the absorbing solution contained in the *first* impinger at the end of the sampling run using a pH indicator strip. The pH of the solution must be ≥8.5 for NaOH and ≥8.0 for $NaHCO_3$. If it is not, discard the collected sample, increase the normality of the NaOH or $NaHCO_3$ impinger absorbing solution to 0.5 N or to a solution normality approved by the Administrator and collect another air emission sample.

8.2.6.2 After determining the pH of the first impinger solution, combine and measure the volume of the liquid in the first, second, and third impingers and quantitatively transfer into the labeled sample container.

Use approximately 200 to 300 mL of the 0.1 N NaOH or 0.1 N $NaHCO_3$ absorbing solution to rinse the probe nozzle, probe liner, three impingers, and connecting glassware; add this rinse to Container No. 1.

8.2.7 Field Reagent Blank.

8.2.7.1 Container No. 2.

8.2.7.2 Place approximately 500 mL of the 0.1 N NaOH or 0.1 N $NaHCO_3$ absorbing solution into a labeled sample container.

8.3 Sample Preservation, Storage, and Transport.

8.3.1 Total Cr Sample Option. Samples to be analyzed for total Cr need not be refrigerated.

8.3.2 $Cr^{+6}$ Sample Option. Samples to be analyzed for $Cr^{+6}$ must be shipped and stored at 4 °C. Allow $Cr^{+6}$ samples to return to ambient temperature prior to analysis.

8.4 Sample Holding Times.

8.4.1 Total Cr Sample Option. Samples to be analyzed for total Cr shall be analyzed within 60 days of collection.

8.4.2 $Cr^{+6}$ Sample Option. Samples to be analyzed for $Cr^{+6}$ shall be analyzed within 14 days of collection.

*9.0 Quality Control*

9.1 ICP Quality Control.

9.1.1 ICP Calibration Reference Standards. Prepare a calibration reference standard using the same alkaline matrix as the calibration standards; it should be at least 10 times the instrumental detection limit.

9.1.1.1 This reference standard must be prepared from a different Cr stock solution source than that used for preparation of the calibration curve standards.

9.1.1.2 Prior to sample analysis, analyze at least one reference standard.

9.1.1.3 The calibration reference standard must be measured within 10 percent of it's true value for the curve to be considered valid.

9.1.1.4 The curve must be validated before sample analyses are performed.

9.1.2 ICP Continuing Check Standard.

9.1.2.1 Perform analysis of the check standard with the field samples as described in Section 11.2 (at least after every 10 samples, and at the end of the analytical run).

9.1.2.2 The check standard can either be the mid-range calibration standard or the reference standard. The results of the check standard shall agree within 10 percent of the expected value; if not, terminate the analyses, correct the problem, recalibrate the instrument, and rerun all samples analyzed subsequent to the last acceptable check standard analysis.

9.1.3 ICP Calibration Blank.

9.1.3.1 Perform analysis of the calibration blank with the field samples as described in Section 11.2 (at least after every 10 samples, and at the end of the analytical run).

9.1.3.2 The results of the calibration blank shall agree within three standard deviations of the mean blank value. If not, analyze the calibration blank two more times and average the results. If the average is not within three standard deviations of the background mean, terminate the analyses, correct the problem, recalibrate, and reanalyze all samples analyzed subsequent to the last acceptable calibration blank analysis.

9.1.4 ICP Interference Check. Prepare an interference check solution that contains known concentrations of interfering elements that will provide an adequate test of the correction factors in the event of potential spectral interferences.

9.1.4.1 Two potential interferences, iron and manganese, may be prepared as 1000 μg/mL and 200 μg/mL solutions, respectively. The solutions should be prepared in dilute $HNO_3$ (1–5 percent). Particular care must be used to ensure that the solutions and/or salts used to prepare the solutions are of ICP grade purity (*i.e.*, that no measurable Cr contamination exists in the salts/solutions). Commercially prepared interfering element check standards are available.

9.1.4.2 Verify the interelement correction factors every three months by analyzing the interference check solution. The correction factors are calculated according to the instrument manufacturer's directions. If the interelement correction factors are used properly, no false Cr should be detected.

9.1.4.3 Negative results with an absolute value greater than three (3) times the detection limit are usually the results of the background correction position being set incorrectly. Scan the spectral region to ensure that the correction position has not been placed on an interfering peak.

9.1.5 ICP Duplicate Sample Analysis. Perform one duplicate sample analysis for each compliance sample batch (3 runs).

9.1.5.1 As there is no sample preparation required for the ICP analysis, a duplicate analysis is defined as a repeat analysis of one of the field samples. The selected sample shall be analyzed using the same procedures that were used to analyze the original sample.

9.1.5.2 Duplicate sample analyses shall agree within 10 percent of the original measurement value.

9.1.5.3 Report the original analysis value for the sample and report the duplicate analysis value as the QC check value. If agreement is not achieved, perform the duplicate analysis again. If agreement is not achieved the second time, perform corrective action to identify and correct the problem before analyzing the sample for a third time.

9.1.6 ICP Matrix Spiking. Spiked samples shall be prepared and analyzed daily to ensure that there are no matrix effects, that samples and standards have been matrix-matched, and that the laboratory equipment is operating properly.

9.1.6.1 Spiked sample recovery analyses should indicate a recovery for the Cr spike of between 75 and 125 percent.

9.1.6.2 Cr levels in the spiked sample should provide final solution concentrations that are within the linear portion of the calibration curve, as well as, at a concentration level at least: equal to that of the original sample; and, ten (10) times the detection limit.

9.1.6.3 If the spiked sample concentration meets the stated criteria but exceeds the linear calibration range, the spiked sample must be diluted with the field absorbing solution.

9.1.6.4 If the recoveries for the Cr spiked samples do not meet the specified criteria, perform corrective action to identify and correct the problem prior to reanalyzing the samples.

9.1.7 ICP Field Reagent Blank.

9.1.7.1 Analyze a minimum of one matrix-matched field reagent blank (Section 8.2.4) per sample batch to determine if contamination or memory effects are occurring.

9.1.7.2 If contamination or memory effects are observed, perform corrective action to identify and correct the problem before reanalyzing the samples.

9.2 GFAAS Quality Control.

9.2.1 GFAAS Calibration Reference Standards. The calibration curve must be verified by using at least one calibration reference standard (made from a reference material or other independent standard material) at or near the mid-range of the calibration curve.

9.2.1.1 The calibration curve must be validated before sample analyses are performed.

9.2.1.2 The calibration reference standard must be measured within 10 percent of its true value for the curve to be considered valid.

9.2.2 GFAAS Continuing Check Standard.

9.2.2.1 Perform analysis of the check standard with the field samples as described in Section 11.4 (at least after every 10 samples, and at the end of the analytical run).

9.2.2.2 These standards are analyzed, in part, to monitor the life and performance of the graphite tube. Lack of reproducibility or a significant change in the signal for the check standard may indicate that the graphite tube should be replaced.

9.2.2.3 The check standard may be either the mid-range calibration standard or the reference standard.

9.2.2.4 The results of the check standard shall agree within 10 percent of the expected value.

9.2.2.5 If not, terminate the analyses, correct the problem, recalibrate the instrument, and reanalyze all samples analyzed subsequent to the last acceptable check standard analysis.

9.2.3 GFAAS Calibration Blank.

9.2.3.1 Perform analysis of the calibration blank with the field samples as described in Section 11.4 (at least after every 10 samples, and at the end of the analytical run).

9.2.3.2 The calibration blank is analyzed to monitor the life and performance of the graphite tube as well as the existence of any memory effects. Lack of reproducibility or a significant change in the signal, may indicate that the graphite tube should be replaced.

9.2.3.3 The results of the calibration blank shall agree within three standard deviations of the mean blank value.

9.2.3.4 If not, analyze the calibration blank two more times and average the results. If the average is not within three standard deviations of the background mean, terminate the analyses, correct the problem, recalibrate, and reanalyze all samples analyzed subsequent to the last acceptable calibration blank analysis.

9.2.4 GFAAS Duplicate Sample Analysis. Perform one duplicate sample analysis for each compliance sample batch (3 runs).

9.2.4.1 A digested aliquot of the selected sample is processed and analyzed using the identical procedures that were used for the whole sample preparation and analytical efforts.

9.2.4.2 Duplicate sample analyses results incorporating duplicate digestions shall agree within 20 percent for sample results exceeding ten (10) times the detection limit.

9.2.4.3 Report the original analysis value for the sample and report the duplicate analysis value as the QC check value.

9.2.4.4 If agreement is not achieved, perform the duplicate analysis again. If agreement is not achieved the second time, perform corrective action to identify and correct the problem before analyzing the sample for a third time.

9.2.5 GFAAS Matrix Spiking.

9.2.5.1 Spiked samples shall be prepared and analyzed daily to ensure that (1) correct procedures are being followed, (2) there are no matrix effects and (3) all equipment is operating properly.

9.2.5.2 Cr spikes are added prior to any sample preparation.

9.2.5.3 Cr levels in the spiked sample should provide final solution concentrations that are within the linear portion of the calibration curve, as well as, at a concentration level at least: equal to that of the original sample; and, ten (10) times the detection limit.

9.2.5.4 Spiked sample recovery analyses should indicate a recovery for the Cr spike of between 75 and 125 percent.

9.2.5.5 If the recoveries for the Cr spiked samples do not meet the specified criteria, perform corrective action to identify and correct the problem prior to reanalyzing the samples.

9.2.6 GFAAS Method of Standard Additions.

9.2.6.1 Method of Standard Additions. Perform procedures in Section 5.4 of Method 12 (40 CFR Part 60, Appendix A)

9.2.6.2 Whenever sample matrix problems are suspected and standard/sample matrix matching is not possible or whenever a new sample matrix is being analyzed, perform referenced procedures to determine if the method of standard additions is necessary.

9.2.7 GFAAS Field Reagent Blank.

9.2.7.1 Analyze a minimum of one matrix-matched field reagent blank (Section 8.2.4) per sample batch to determine if contamination or memory effects are occurring.

9.2.7.2 If contamination or memory effects are observed, perform corrective action to identify and correct the problem before reanalyzing the samples.

9.3 IC/PCR Quality Control.

9.3.1 IC/PCR Calibration Reference Standards.

9.3.1.1 Prepare a calibration reference standard at a concentration that is at or near the mid-point of the calibration curve using the same alkaline matrix as the calibration standards. This reference standard should be prepared from a different Cr stock solution than that used to prepare the calibration curve standards. The reference standard is used to verify the accuracy of the calibration curve.

9.3.1.2 The curve must be validated before sample analyses are performed. Prior to sample analysis, analyze at least one reference standard with an expected value within the calibration range.

9.3.1.3 The results of this reference standard analysis must be within 10 percent of the true value of the reference standard for the calibration curve to be considered valid.

9.3.2 IC/PCR Continuing Check Standard and Calibration Blank.

9.3.2.1 Perform analysis of the check standard and the calibration blank with the field samples as described in Section 11.6 (at least after every 10 samples, and at the end of the analytical run).

9.3.2.2 The result from the check standard must be within 10 percent of the expected value.

9.3.2.3 If the 10 percent criteria is exceeded, excessive drift and/or instrument degradation may have occurred, and must be corrected before further analyses can be performed.

9.3.2.4 The results of the calibration blank analyses must agree within three standard deviations of the mean blank value.

9.3.2.5 If not, analyze the calibration blank two more times and average the results.

9.3.2.6 If the average is not within three standard deviations of the background mean, terminate the analyses, correct the problem, recalibrate, and reanalyze all samples analyzed subsequent to the last acceptable calibration blank analysis.

9.3.3 IC/PCR Duplicate Sample Analysis.

9.3.3.1 Perform one duplicate sample analysis for each compliance sample batch (3 runs).

9.3.3.2 An aliquot of the selected sample is prepared and analyzed using procedures identical to those used for the emission samples (for example, filtration and/or, if necessary, preconcentration).

9.3.3.3 Duplicate sample injection results shall agree within 10 percent for sample results exceeding ten (10) times the detection limit.

9.3.3.4 Report the original analysis value for the sample and report the duplicate analysis value as the QC check value.

9.3.3.5 If agreement is not achieved, perform the duplicate analysis again.

9.3.3.6 If agreement is not achieved the second time, perform corrective action to identify and correct the problem prior to analyzing the sample for a third time.

9.3.4 ICP/PCR Matrix Spiking. Spiked samples shall be prepared and analyzed with each sample set to ensure that there are no matrix effects, that samples and standards have been matrix-matched, and that the equipment is operating properly.

9.3.4.1 Spiked sample recovery analysis should indicate a recovery of the $Cr^{+6}$ spike between 75 and 125 percent.

9.3.4.2 The spiked sample concentration should be within the linear portion of the calibration curve and should be equal to or greater than the concentration of the original sample. In addition, the spiked sample concentration should be at least ten (10) times the detection limit.

9.3.4.3 If the recoveries for the $Cr^{+6}$ spiked samples do not meet the specified criteria, perform corrective action to identify and correct the problem prior to reanalyzing the samples.

9.3.5 IC/PCR Field Reagent Blank.

9.3.5.1 Analyze a minimum of one matrix-matched field reagent blank (Section 8.2.4) per sample batch to determine if contamination or memory effects are occurring.

9.3.5.2 If contamination or memory effects are observed, perform corrective action to identify and correct the problem before reanalyzing the samples.

*10.0 Calibration and Standardization*

10.1 Sampling Train Calibration. Perform calibrations described in Method 5, (40 CFR part 60, appendix A). The alternate calibration procedures described in Method 5, may also be used.

10.2 ICP Calibration.

10.2.1 Calibrate the instrument according to the instrument manufacturer's recommended procedures, using a calibration blank and three standards for the initial calibration.

10.2.2 Calibration standards should be prepared fresh daily, as described in Section

7.3.8. Be sure that samples and calibration standards are matrix matched. Flush the system with the calibration blank between each standard.

10.2.3 Use the average intensity of multiple exposures (3 or more) for both standardization and sample analysis to reduce random error.

10.2.4 Employing linear regression, calculate the correlation coefficient .

10.2.5 The correlation coefficient must equal or exceed 0.995.

10.2.6 If linearity is not acceptable, prepare and rerun another set of calibration standards or reduce the range of the calibration standards, as necessary.

10.3 GFAAS Calibration.

10.3.1 For instruments that measure directly in concentration, set the instrument software to display the correct concentration, if applicable.

10.3.2 Curve must be linear in order to correctly perform the method of standard additions which is customarily performed automatically with most instrument computer-based data systems.

10.3.3 The calibration curve (direct calibration or standard additions) must be prepared daily with a minimum of a calibration blank and three standards that are prepared fresh daily.

10.3.4 The calibration curve acceptance criteria must equal or exceed 0.995.

10.3.5 If linearity is not acceptable, prepare and rerun another set of calibration standards or reduce the range of calibration standards, as necessary.

10.4 IC/PCR Calibration.

10.4.1 Prepare a calibration curve using the calibration blank and three calibration standards prepared fresh daily as described in Section 7.3.8.

10.4.2 The calibration curve acceptance criteria must equal or exceed 0.995.

10.4.3 If linearity is not acceptable, remake and/or rerun the calibration standards. If the calibration curve is still unacceptable, reduce the range of the curve.

10.4.4 Analyze the standards with the field samples as described in Section 11.6.

### *11.0 Analytical Procedures*

NOTE: The method determines the chromium concentration in μg Cr/mL. It is important that the analyst measure the field sample volume prior to analyzing the sample. This will allow for conversion of μg Cr/mL to μg Cr/sample.

11.1 ICP Sample Preparation.

11.1.1 The ICP analysis is performed directly on the alkaline impinger solution; acid digestion is not necessary, provided the samples and standards are matrix matched.

11.1.2 The ICP analysis should only be employed when the solution analyzed has a Cr concentration greater than 35 μg/L or five times the method detection limit as determined according to Appendix B in 40 CFR Part 136 or by other commonly accepted analytical procedures.

11.2 ICP Sample Analysis.

11.2.1 The ICP analysis is applicable for the determination of total chromium only.

11.2.2 ICP Blanks. Two types of blanks are required for the ICP analysis.

11.2.2.1 Calibration Blank. The calibration blank is used in establishing the calibration curve. For the calibration blank, use either 0.1 N NaOH or 0.1 N $NaHCO_3$, whichever is used for the impinger absorbing solution. The calibration blank can be prepared fresh in the laboratory; it does not have to be prepared from the same batch of solution that was used in the field. A sufficient quantity should be prepared to flush the system between standards and samples.

11.2.2.2 Field Reagent Blank. The field reagent blank is collected in the field during the testing program. The field reagent blank (Section 8.2.4) is an aliquot of the absorbing solution prepared in Section 7.1.2. The reagent blank is used to assess possible contamination resulting from sample processing.

11.2.3 ICP Instrument Adjustment.

11.2.3.1 Adjust the ICP instrument for proper operating parameters including wavelength, background correction settings (if necessary), and interfering element correction settings (if necessary).

11.2.3.2 The instrument must be allowed to become thermally stable before beginning measurements (usually requiring at least 30 min of operation prior to calibration). During this warmup period, the optical calibration and torch position optimization may be performed (consult the operator's manual).

11.2.4 ICP Instrument Calibration.

11.2.4.1 Calibrate the instrument according to the instrument manufacturer's recommended procedures, and the procedures specified in Section 10.2.

11.2.4.2 Prior to analyzing the field samples, reanalyze the highest calibration standard as if it were a sample.

11.2.4.3 Concentration values obtained should not deviate from the actual values or from the established control limits by more than 5 percent, whichever is lower (see Sections 9.1 and 10.2).

11.2.4.4 If they do, follow the recommendations of the instrument manufacturer to correct the problem.

11.2.5 ICP Operational Quality Control Procedures.

11.2.5.1 Flush the system with the calibration blank solution for at least 1 min before the analysis of each sample or standard.

11.2.5.2 Analyze the continuing check standard and the calibration blank after each batch of 10 samples.

11.2.5.3 Use the average intensity of multiple exposures for both standardization and sample analysis to reduce random error.

11.2.6 ICP Sample Dilution.

11.2.6.1 Dilute and reanalyze samples that are more concentrated than the linear calibration limit or use an alternate, less sensitive Cr wavelength for which quality control data have already been established.

11.2.6.2 When dilutions are performed, the appropriate factors must be applied to sample measurement results.

11.2.7 Reporting Analytical Results. All analytical results should be reported in µg Cr/mL using three significant figures. Field sample volumes (mL) must be reported also.

11.3 GFAAS Sample Preparation.

11.3.1 GFAAS Acid Digestion. An acid digestion of the alkaline impinger solution is required for the GFAAS analysis.

11.3.1.1 In a beaker, add 10 mL of concentrated $HNO_3$ to a 100 mL sample aliquot that has been well mixed. Cover the beaker with a watch glass. Place the beaker on a hot plate and reflux the sample to near dryness. Add another 5 mL of concentrated $HNO_3$ to complete the digestion. Again, carefully reflux the sample volume to near dryness. Rinse the beaker walls and watch glass with reagent water.

11.3.1.2 The final concentration of $HNO_3$ in the solution should be 1 percent (v/v).

11.3.1.3 Transfer the digested sample to a 50-mL volumetric flask. Add 0.5 mL of concentrated $HNO_3$ and 1 mL of the 10 µg/mL of $Ca(NO_3)_2$. Dilute to 50 mL with reagent water.

11.3.2 $HNO_3$ Concentration. A different final volume may be used based on the expected Cr concentration, but the $HNO_3$ concentration must be maintained at 1 percent (v/v).

11.4 GFAAS Sample Analysis.

11.4.1 The GFAAS analysis is applicable for the determination of total chromium only.

11.4.2 GFAAS Blanks. Two types of blanks are required for the GFAAS analysis.

11.4.2.1 Calibration Blank. The 1.0 percent $HNO_3$ is the calibration blank which is used in establishing the calibration curve.

11.4.2.2 Field Reagent Blank. An aliquot of the 0.1 N NaOH solution or the 0.1 N $NaHCO_3$ prepared in Section 7.1.2 is collected for the field reagent blank. The field reagent blank is used to assess possible contamination resulting from processing the sample.

11.4.2.2.1 The reagent blank must be subjected to the entire series of sample preparation and analytical procedures, including the acid digestion.

11.4.2.2.2 The reagent blank's final solution must contain the same acid concentration as the sample solutions.

11.4.3 GFAAS Instrument Adjustment.

11.4.3.1 The 357.9 nm wavelength line shall be used.

11.4.3.2 Follow the manufacturer's instructions for all other spectrophotometer operating parameters.

11.4.4 Furnace Operational Parameters. Parameters suggested by the manufacturer should be employed as guidelines.

11.4.4.1 Temperature-sensing mechanisms and temperature controllers can vary between instruments and/or with time; the validity of the furnace operating parameters must be periodically confirmed by systematically altering the furnace parameters while analyzing a standard. In this manner, losses of analyte due to higher-than-necessary temperature settings or losses in sensitivity due to less than optimum settings can be minimized.

11.4.4.2 Similar verification of furnace operating parameters may be required for complex sample matrices (consult instrument manual for additional information). Calibrate the GFAAS system following the procedures specified in Section 10.3.

11.4.5 GFAAS Operational Quality Control Procedures.

11.4.5.1 Introduce a measured aliquot of digested sample into the furnace and atomize.

11.4.5.2 If the measured concentration exceeds the calibration range, the sample should be diluted with the calibration blank solution (1.0 percent $HNO_3$) and reanalyzed.

11.4.5.3 Consult the operator's manual for suggested injection volumes. The use of multiple injections can improve accuracy and assist in detecting furnace pipetting errors.

11.4.5.4 Analyze a minimum of one matrix-matched reagent blank per sample batch to determine if contamination or any memory effects are occurring.

11.4.5.5 Analyze a calibration blank and a continuing check standard after approximately every batch of 10 sample injections.

11.4.6 GFAAS Sample Dilution.

11.4.6.1 Dilute and reanalyze samples that are more concentrated than the instrument calibration range.

11.4.6.2 If dilutions are performed, the appropriate factors must be applied to sample measurement results.

11.4.7 Reporting Analytical Results.

11.4.7.1 Calculate the Cr concentrations by the method of standard additions (see operator's manual) or, from direct calibration. All dilution and/or concentration factors must be used when calculating the results.

11.4.7.2 Analytical results should be reported in µg Cr/mL using three significant figures. Field sample volumes (mL) must be reported also.

11.5 IC/PCR Sample Preparation.

11.5.1 Sample pH. Measure and record the sample pH prior to analysis.

11.5.2 Sample Filtration. Prior to preconcentration and/or analysis, filter all field samples through a 0.45-µm filter. The

filtration step should be conducted just prior to sample injection/analysis.

11.5.2.1 Use a portion of the sample to rinse the syringe filtration unit and acetate filter and then collect the required volume of filtrate.

11.5.2.2 Retain the filter if total Cr is to be determined also.

11.5.3 Sample Preconcentration (older instruments).

11.5.3.1 For older instruments, a preconcentration system may be used in conjunction with the IC/PCR to increase sensitivity for trace levels of $Cr^{+6}$.

11.5.3.2 The preconcentration is accomplished by selectively retaining the analyte on a solid absorbent, followed by removal of the analyte from the absorbent (consult instrument manual).

11.5.3.3 For a manual system, position the injection valve so that the eluent displaces the concentrated $Cr^{+6}$ sample, transferring it from the preconcentration column and onto the IC anion separation column.

11.6 IC/PCR Sample Analyses.

11.6.1 The IC/PCR analysis is applicable for hexavalent chromium measurements only.

11.6.2 IC/PCR Blanks. Two types of blanks are required for the IC/PCR analysis.

11.6.2.1 Calibration Blank. The calibration blank is used in establishing the analytical curve. For the calibration blank, use either 0.1 N NaOH or 0.1 N $NaHCO_3$, whichever is used for the impinger solution. The calibration blank can be prepared fresh in the laboratory; it does not have to be prepared from the same batch of absorbing solution that is used in the field.

11.6.2.2 Field Reagent Blank. An aliquot of the 0.1 N NaOH solution or the 0.1 N $NaHCO_3$ solution prepared in Section 7.1.2 is collected for the field reagent blank. The field reagent blank is used to assess possible contamination resulting from processing the sample.

11.6.3 Stabilized Baseline. Prior to sample analysis, establish a stable baseline with the detector set at the required attenuation by setting the eluent and post-column reagent flow rates according to the manufacturers recommendations.

NOTE: As long as the ratio of eluent flow rate to PCR flow rate remains constant, the standard curve should remain linear. Inject a sample of reagent water to ensure that no $Cr^{+6}$ appears in the water blank.

11.6.4 Sample Injection Loop. Size of injection loop is based on standard/sample concentrations and the selected attenuator setting.

11.6.4.1 A 50-μL loop is normally sufficient for most higher concentrations.

11.6.4.2 The sample volume used to load the injection loop should be at least 10 times the loop size so that all tubing in contact with the sample is thoroughly flushed with the new sample to prevent cross contamination.

11.6.5 IC/PCR Instrument Calibration.

11.6.5.1 First, inject the calibration standards prepared, as described in Section 7.3.8 to correspond to the appropriate concentration range, starting with the lowest standard first.

11.6.5.2 Check the performance of the instrument and verify the calibration using data gathered from analyses of laboratory blanks, calibration standards, and a quality control sample.

11.6.5.3 Verify the calibration by analyzing a calibration reference standard. If the measured concentration exceeds the established value by more than 10 percent, perform a second analysis. If the measured concentration still exceeds the established value by more than 10 percent, terminate the analysis until the problem can be identified and corrected.

11.6.6 IC/PCR Instrument Operation.

11.6.6.1 Inject the calibration reference standard (as described in Section 9.3.1), followed by the field reagent blank (Section 8.2.4), and the field samples.

11.6.6.1.1 Standards (and QC standards) and samples are injected into the sample loop of the desired size (use a larger size loop for greater sensitivity). The $Cr^{+6}$ is collected on the resin bed of the column.

11.6.6.1.2 After separation from other sample components, the $Cr^{+6}$ forms a specific complex in the post-column reactor with the DPC reaction solution, and the complex is detected by visible absorbance at a maximum wavelength of 540 nm.

11.6.6.1.3 The amount of absorbance measured is proportional to the concentration of the $Cr^{+6}$ complex formed.

11.6.6.1.4 The IC retention time and the absorbance of the $Cr^{+6}$ complex with known $Cr^{+6}$ standards analyzed under identical conditions must be compared to provide both qualitative and quantitative analyses.

11.6.6.1.5 If a sample peak appears near the expected retention time of the $Cr^{+6}$ ion, spike the sample according to Section 9.3.4 to verify peak identity.

11.6.7 IC/PCR Operational Quality Control Procedures.

11.6.7.1 Samples should be at a pH ≥8.5 for NaOH and ≥8.0 if using $NaHCO_3$; document any discrepancies.

11.6.7.2 Refrigerated samples should be allowed to equilibrate to ambient temperature prior to preparation and analysis.

11.6.7.3 Repeat the injection of the calibration standards at the end of the analytical run to assess instrument drift. Measure areas or heights of the $Cr^{+6}$/DPC complex chromatogram peaks.

11.6.7.4 To ensure the precision of the sample injection (manual or autosampler), the response for the second set of injected

standards must be within 10 percent of the average response.

11.6.7.5 If the 10 percent criteria duplicate injection cannot be achieved, identify the source of the problem and rerun the calibration standards.

11.6.7.6 Use peak areas or peak heights from the injections of calibration standards to generate a linear calibration curve. From the calibration curve, determine the concentrations of the field samples.

11.6.8 IC/PCR Sample Dilution.

11.6.8.1 Samples having concentrations higher than the established calibration range must be diluted into the calibration range and re-analyzed.

11.6.8.2 If dilutions are performed, the appropriate factors must be applied to sample measurement results.

11.6.9 Reporting Analytical Results. Results should be reported in µg $Cr^{+6}$/mL using three significant figures. Field sample volumes (mL) must be reported also.

*12.0 Data Analysis and Calculations*

12.1 Pretest Calculations.

12.1.1 Pretest Protocol (Site Test Plan).

12.1.1.1 The pretest protocol should define and address the test data quality objectives (DQOs), with all assumptions, that will be required by the end user (enforcement authority); what data are needed? why are the data needed? how will the data be used? what are method detection limits? and what are estimated target analyte levels for the following test parameters.

12.1.1.1.1 Estimated source concentration for total chromium and/or $Cr^{+6}$.

12.1.1.1.2 Estimated minimum sampling time and/or volume required to meet method detection limit requirements (Appendix B 40 CFR Part 136) for measurement of total chromium and/or $Cr^{+6}$.

12.1.1.1.3 Demonstrate that planned sampling parameters will meet DQOs. The protocol must demonstrate that the planned sampling parameters calculated by the tester will meet the needs of the source and the enforcement authority.

12.1.1.2 The pre-test protocol should include information on equipment, logistics, personnel, process operation, and other resources necessary for an efficient and coordinated test.

12.1.1.3 At a minimum, the pre-test protocol should identify and be approved by the source, the tester, the analytical laboratory, and the regulatory enforcement authority. The tester should not proceed with the compliance testing before obtaining approval from the enforcement authority.

12.1.2 Post Test Calculations.

12.1.2.1 Perform the calculations, retaining one extra decimal figure beyond that of the acquired data. Round off figures after final calculations.

12.1.2.2 Nomenclature.

$C_S$ = Concentration of Cr in sample solution, µg Cr/mL.
$C_{cr}$ = Concentration of Cr in stack gas, dry basis, corrected to standard conditions, mg/dscm.
D = Digestion factor, dimension less.
F = Dilution factor, dimension less.
$M_{Cr}$ = Total Cr in each sample, µg.
$V_{ad}$ = Volume of sample aliquot after digestion, mL.
$V_{af}$ = Volume of sample aliquot after dilution, mL.
$V_{bd}$ = Volume of sample aliquot submitted to digestion, mL.
$V_{bf}$ = Volume of sample aliquot before dilution, mL.
$V_{mL}$ = Volume of impinger contents plus rinses, mL.
$V_{m(std)}$ = Volume of gas sample measured by the dry gas meter, corrected to standard conditions, dscm.

12.1.2.3 Dilution Factor. The dilution factor is the ratio of the volume of sample aliquot after dilution to the volume before dilution. This ratio is given by the following equation:

$$F = \frac{V_{af}}{V_{bf}} \qquad \text{Eq. 306-1}$$

12.1.2.4 Digestion Factor. The digestion factor is the ratio of the volume of sample aliquot after digestion to the volume before digestion. This ratio is given by Equation 306–2.

$$D = \frac{V_{ad}}{V_{bd}} \qquad \text{Eq. 306-2}$$

12.1.2.5 Total Cr in Sample. Calculate MCr, the total μg Cr in each sample, using the following equation:

$$M_{cr} = V_{mL} \times C_S \times F \times D \qquad \text{Eq. 306-3}$$

12.1.2.6 Average Dry Gas Meter Temperature and Average Orifice Pressure Drop. Same as Method 5.

12.1.2.7 Dry Gas Volume, Volume of Water Vapor, Moisture Content. Same as Method 5.

12.1.2.8 Cr Emission Concentration ($C_{Cr}$). Calculate $C_{Cr}$, the Cr concentration in the stack gas, in mg/dscm on a dry basis, corrected to standard conditions using the following equation:

$$C_{Cr} = \frac{M_{Cr}}{V_{m(std)}} \times 10^{-3} \frac{mg}{\mu g} \qquad \text{Eq. 306-4}$$

12.1.2.9 Isokinetic Variation, Acceptable Results. Same as Method 5.

*13.0 Method Performance*

13.1 Range. The recommended working range for all of the three analytical techniques starts at five times the analytical detection limit (see also Section 13.2.2). The upper limit of all three techniques can be extended indefinitely by appropriate dilution.

13.2 Sensitivity.

13.2.1 Analytical Sensitivity. The estimated instrumental detection limits listed are provided as a guide for an instrumental limit. The actual method detection limits are sample and instrument dependent and may vary as the sample matrix varies.

13.2.1.2 ICP Analytical Sensitivity. The minimum estimated detection limits for ICP, as reported in Method 6010A and the recently revised Method 6010B of SW–846 (Reference 1), are 7.0 μg Cr/L and 4.7 μg Cr/L, respectively.

13.2.1.3 GFAAS Analytical Sensitivity. The minimum estimated detection limit for GFAAS, as reported in Methods 7000A and 7191 of SW–846 (Reference 1), is 1 μg Cr/L.

13.2.1.4 IC/PCR Analytical Sensitivity. The minimum detection limit for IC/PCR with a preconcentrator, as reported in Methods 0061 and 7199 of SW–846 (Reference 1), is 0.05 μg $Cr^{+6}$/L.

1.3.2.1.5 Determination of Detection Limits. The laboratory performing the $Cr^{+6}$ measurements must determine the method detection limit on a quarterly basis using a suitable procedure such as that found in 40 CFR, Part 136, Appendix B. The determination should be made on samples in the appropriate alkaline matrix. Normally this involves the preparation (if applicable) and consecutive measurement of seven (7) separate aliquots of a sample with a concentration <5 times the expected detection limit. The detection limit is 3.14 times the standard deviation of these results.

13.2.2 In-stack Sensitivity. The in-stack sensitivity depends upon the analytical detection limit, the volume of stack gas sampled, the total volume of the impinger absorbing solution plus the rinses, and, in some cases, dilution or concentration factors from sample preparation. Using the analytical detection limits given in Sections 13.2.1.1, 13.2.1.2, and 13.2.1.3; a stack gas sample volume of 1.7 dscm; a total liquid sample volume of 500 mL; and the digestion concentration factor of ½ for the GFAAS analysis; the corresponding in-stack detection limits are 0.0014 mg Cr/dscm to 0.0021 mg Cr/dscm for ICP, 0.00015 mg Cr/dscm for GFAAS, and 0.000015 mg $Cr^{+6}$/dscm for IC/PCR with preconcentration.

NOTE: It is recommended that the concentration of Cr in the analytical solutions be at least five times the analytical detection limit to optimize sensitivity in the analyses. Using this guideline and the same assumptions for impinger sample volume, stack gas sample volume, and the digestion concentration factor for the GFAAS analysis (500 mL,1.7 dscm, and 1/2, respectively), the recommended minimum stack concentrations for optimum sensitivity are 0.0068 mg Cr/dscm to 0.0103 mg Cr/dscm for ICP, 0.00074 mg Cr/dscm for GFAAS, and 0.000074 mg $Cr^{+6}$/dscm for IC/PCR with preconcentration. If required, the in-stack detection limits can be improved by either increasing the stack gas sample volume, further reducing the volume of the digested sample for GFAAS, improving the analytical detection limits, or any combination of the three.

13.3 Precision.

13.3.1 The following precision data have been reported for the three analytical methods. In each case, when the sampling precision is combined with the reported analytical precision, the resulting overall precision may decrease.

13.3.2 Bias data is also reported for GFAAS.

13.4 ICP Precision.

13.4.1 As reported in Method 6010B of SW–846 (Reference 1), in an EPA round-robin Phase 1 study, seven laboratories applied the ICP technique to acid/distilled water matrices that had been spiked with various metal concentrates. For true values of 10, 50, and 150 µg Cr/L; the mean reported values were 10, 50, and 149 µg Cr/L; and the mean percent relative standard deviations were 18, 3.3, and 3.8 percent, respectively.

13.4.2 In another multi laboratory study cited in Method 6010B, a mean relative standard of 8.2 percent was reported for an aqueous sample concentration of approximately 3750 µg Cr/L.

13.5 GFAAS Precision. As reported in Method 7191 of SW–846 (Reference 1), in a single laboratory (EMSL), using Cincinnati, Ohio tap water spiked at concentrations of 19, 48, and 77 µg Cr/L, the standard deviations were ±0.1, ±0.2, and ±0.8, respectively. Recoveries at these levels were 97 percent, 101 percent, and 102 percent, respectively.

13.6 IC/PCR Precision. As reported in Methods 0061 and 7199 of SW–846 (Reference 1), the precision of IC/PCR with sample preconcentration is 5 to 10 percent. The overall precision for sewage sludge incinerators emitting 120 ng/dscm of $Cr^{+6}$ and 3.5 µg/dscm of total Cr was 25 percent and 9 percent, respectively; and for hazardous waste incinerators emitting 300 ng/dscm of $C^{+6}$ the precision was 20 percent.

### *14.0 Pollution Prevention*

14.1 The only materials used in this method that could be considered pollutants are the chromium standards used for instrument calibration and acids used in the cleaning of the collection and measurement containers/labware, in the preparation of standards, and in the acid digestion of samples. Both reagents can be stored in the same waste container.

14.2 Cleaning solutions containing acids should be prepared in volumes consistent with use to minimize the disposal of excessive volumes of acid.

14.3 To the extent possible, the containers/vessels used to collect and prepare samples should be cleaned and reused to minimize the generation of solid waste.

### *15.0 Waste Management*

15.1 It is the responsibility of the laboratory and the sampling team to comply with all federal, state, and local regulations governing waste management, particularly the discharge regulations, hazardous waste identification rules, and land disposal restrictions; and to protect the air, water, and land by minimizing and controlling all releases from field operations.

15.2 For further information on waste management, consult The Waste Management Manual for Laboratory Personnel and Less is Better—Laboratory Chemical Management for Waste Reduction, available from the American Chemical Society's Department of Government Relations and Science Policy, 1155 16th Street NW, Washington, DC 20036.

### *16.0 References*

1. ''Test Methods for Evaluating Solid Waste, Physical/Chemical Methods, SW–846, Third Edition,'' as amended by Updates I, II, IIA, IIB, and III. Document No. 955–001–000001. Available from Superintendent of Documents, U.S. Government Printing Office, Washington, DC, November 1986.

2. Cox, X.B., R.W. Linton, and F.E. Butler. Determination of Chromium Speciation in Environmental Particles—A Multi-technique Study of Ferrochrome Smelter Dust. Accepted for publication in Environmental Science and Technology.

3. Same as Section 17.0 of Method 5, References 2, 3, 4, 5, and 7.

4. California Air Resources Board, ''Determination of Total Chromium and Hexavalent Chromium Emissions from Stationary Sources.'' Method 425, September 12, 1990.

5. *The Merck Index*. Eleventh Edition. Merck & Co., Inc., 1989.

6. Walpole, R.E., and R.H. Myers. ''Probability and Statistics for Scientists and Engineering.'' 3rd Edition. MacMillan Publishing Co., NewYork, N.Y., 1985.

### *17.0 Tables, Diagrams, Flowcharts, and Validation Data*

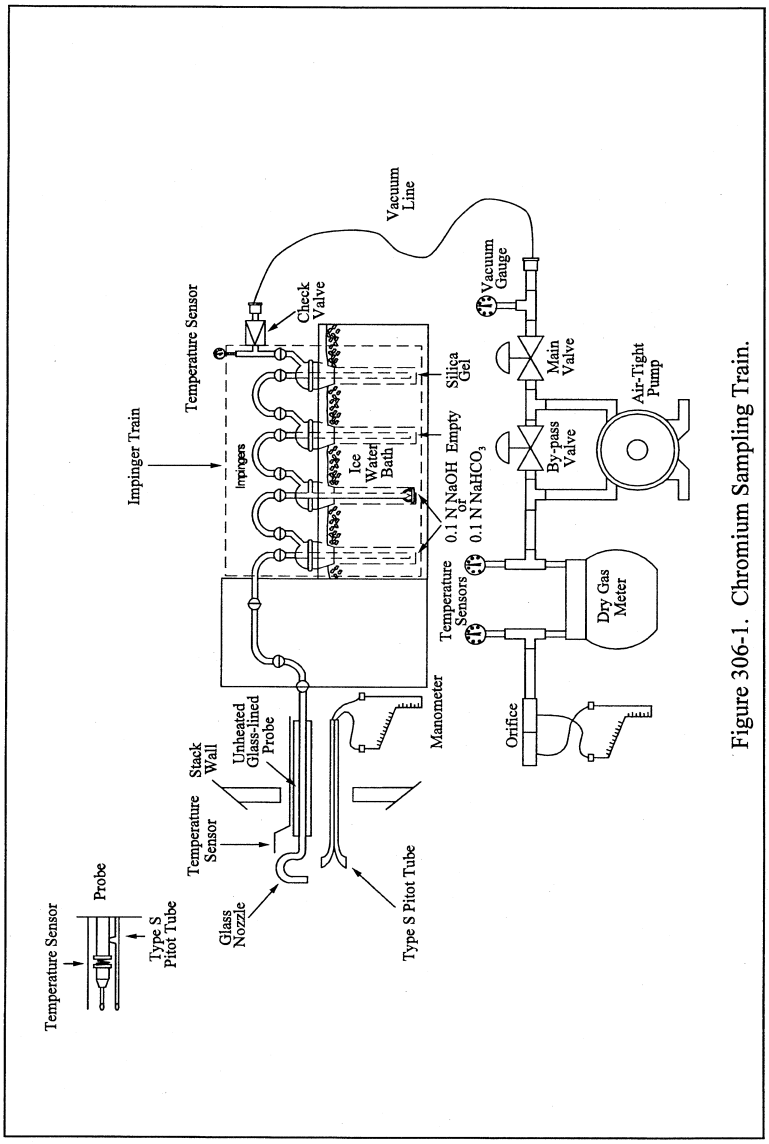


Figure 306-1. Chromium Sampling Train.

Plant _____
Location _____
Operator _____
Date _____
Run No. _____
Sample box No. _____
Meter box No. _____
Meter $\Delta H@$ _____
C factor _____
Pitot tube coefficient, $C_p$ _____

SCHEMATIC OF STACK CROSS SECTION

Ambient temperature _____
Barometric pressure _____
Assumed moisture, % _____
Probe length, (ft.) _____
Nozzle identification No. _____
Average calibrated nozzle diameter, (in.) _____
Leak rate, (cfm) _____
Static pressure, (in. Hg) _____

| Traverse point number | Sampling time | Vacuum | Stack temperature | Velocity head | Pressure differential across orifice meter | Gas meter reading | Gas sample temperature at dry gas meter | | Temperature of gas leaving condenser or last impinger |
|---|---|---|---|---|---|---|---|---|---|
| | | | | | | | Inlet | Outlet | |
| | min. | (in. Hg) | ($T_s$) (°F) | ($\Delta P_s$) (in. $H_2O$) | (in. $H_2O$) | ($ft^3$) | (°F) | (°F) | (°F) |
| | | | | | | | | | |
| | | | | | | | | | |
| | | | | | | | | | |
| | | | | | | | | | |
| | | | | | | | | | |
| | | | | | | | | | |
| | | | | | | | | | |
| | | | | | | | | | |
| Total | | | | | | | Avg. | Avg. | |
| Average | | | | | | | Avg. | | |

Figure 306-2. Chromium Field Data Sheet.

METHOD 306A—DETERMINATION OF CHROMIUM EMISSIONS FROM DECORATIVE AND HARD CHROMIUM ELECTROPLATING AND CHROMIUM ANODIZING OPERATIONS

NOTE: This method does not include all of the specifications (*e.g.*, equipment and supplies) and procedures (*e.g.*, sampling and analytical) essential to its performance. Some material is incorporated by reference from other methods in 40 CFR Part 60, Appendix A and in this part. Therefore, to obtain reliable results, persons using this method should have a thorough knowledge of at least Methods 5 and 306.

*1.0 Scope and Application*

1.1 Analyte. Chromium. CAS Number (7440–47–3).

1.2 Applicability.

1.2.1 This method applies to the determination of chromium (Cr) in emissions from decorative and hard chromium electroplating facilities, chromium anodizing operations, and continuous chromium plating at iron and steel facilities. The method is less expensive and less complex to conduct than Method 306. Correctly applied, the precision and bias of the sample results should be comparable to those obtained with the isokinetic Method 306. This method is applicable for the determination of air emissions under nominal ambient moisture, temperature, and pressure conditions.

1.2.2 The method is also applicable to electroplating and anodizing sources controlled by wet scrubbers.

1.3 Data Quality Objectives.

1.3.1 Pretest Protocol.

1.3.1.1 The pretest protocol should define and address the test data quality objectives (DQOs), with all assumptions, that will be required by the end user (enforcement authority); what data are needed? why are the data needed? how will data be used? what are method detection limits? and what are estimated target analyte levels for the following test parameters.

1.3.1.1.1 Estimated source concentration for total chromium and/or $Cr^{+6}$.

1.3.1.1.2 Estimated minimum sampling time and/or volume required to meet method detection limit requirements (Appendix B 40 CFR Part 136) for measurement of total chromium and/or $Cr^{+6}$.

1.3.1.1.3 Demonstrate that planned sampling parameters will meet DQOs. The protocol must demonstrate that the planned sampling parameters calculated by the tester will meet the needs of the source and the enforcement authority.

1.3.1.2 The pre-test protocol should include information on equipment, logistics, personnel, process operation, and other resources necessary for an efficient and coordinated performance test.

1.3.1.3 At a minimum, the pre-test protocol should identify and be approved by the source, the tester, the analytical laboratory, and the regulatory enforcement authority. The tester should not proceed with the compliance testing before obtaining approval from the enforcement authority.

*2.0 Summary of Method*

2.1 Sampling.

2.1.1 An emission sample is extracted from the source at a constant sampling rate determined by a critical orifice and collected in a sampling train composed of a probe and impingers. The proportional sampling time at the cross sectional traverse points is varied according to the stack gas velocity at each point. The total sample time must be at least two hours.

2.1.2 The chromium emission concentration is determined by the same analytical procedures described in Method 306: inductively-coupled plasma emission spectrometry (ICP), graphite furnace atomic absorption spectrometry (GFAAS), or ion chromatography with a post-column reactor (IC/PCR).

2.1.2.1 Total chromium samples with high chromium concentrations (≥35 μg/L) may be analyzed using inductively coupled plasma emission spectrometry (ICP) at 267.72 nm.

NOTE: The ICP analysis is applicable for this method only when the solution analyzed has a Cr concentration greater than or equal to 35 μg/L or five times the method detection limit as determined according to Appendix B in 40 CFR Part 136.

2.1.2.2 Alternatively, when lower total chromium concentrations (<35 μg/L) are encountered, a portion of the alkaline sample solution may be digested with nitric acid and analyzed by graphite furnace atomic absorption spectroscopy (GFAAS) at 357.9 nm.

2.1.2.3 If it is desirable to determine hexavalent chromium ($Cr^{+6}$) emissions, the samples may be analyzed using an ion chromatograph equipped with a post-column reactor (IC/PCR) and a visible wavelength detector. To increase sensitivity for trace levels of $Cr^{+6}$, a preconcentration system may be used in conjunction with the IC/PCR.

*3.0 Definitions*

3.1 *Total Chromium*—measured chromium content that includes both major chromium oxidation states (Cr + 3, Cr + 6).

3.2 *May*—Implies an optional operation.

3.3 *Digestion*—The analytical operation involving the complete (or nearly complete) dissolution of the sample in order to ensure the complete solubilization of the element (analyte) to be measured.

3.4 *Interferences*—Physical, chemical, or spectral phenomena that may produce a high or low bias in the analytical result.

3.5 *Analytical System*—All components of the analytical process including the sample digestion and measurement apparatus.

3.6 *Sample Recovery*—The quantitative transfer of sample from the collection apparatus to the sample preparation (digestion, etc.) apparatus. This term should not be confused with analytical recovery.

*4.0 Interferences*

4.1 Same as in Method 306, Section 4.0.

*5.0 Safety*

5.1 Disclaimer. This method may involve hazardous materials, operations, and equipment. This test method does not purport to address all of the safety issues associated with its use. It is the responsibility of the user to establish appropriate safety and health practices and to determine the applicability of regulatory limitations prior to performing this test method.

5.2 Chromium and some chromium compounds have been listed as carcinogens although Chromium (III) compounds show little or no toxicity. Chromium is a skin and respiratory irritant.

*6.0 Equipment and Supplies*

NOTE: Mention of trade names or specific products does not constitute endorsement by the Environmental Protection Agency.

6.1 Sampling Train. A schematic of the sampling train is shown in Figure 306A–1. The individual components of the train are available commercially, however, some fabrication and assembly are required.

6.1.1 Probe Nozzle/Tubing and Sheath.

6.1.1.1 Use approximately 6.4-mm (¼-in.) inside diameter (ID) glass or rigid plastic tubing approximately 20 cm (8 in.) in length with a short 90 degree bend at one end to form the sampling nozzle. Grind a slight taper on the nozzle end before making the bend. Attach the nozzle to flexible tubing of sufficient length to enable collection of a sample from the stack.

6.1.1.2 Use a straight piece of larger diameter rigid tubing (such as metal conduit or plastic water pipe) to form a sheath that begins about 2.5 cm (1 in.) from the 90 ° bend on the nozzle and encases and supports the flexible tubing.

6.1.2 Type S Pitot Tube. Same as Method 2, Section 6.1 (40 CFR Part 60, Appendix A).

6.1.3 Temperature Sensor.

6.1.3.1 A thermocouple, liquid-filled bulb thermometer, bimetallic thermometer, mercury-in-glass thermometer, or other sensor capable of measuring temperature to within 1.5 percent of the minimum absolute stack temperature.

6.1.3.2 The temperature sensor shall either be positioned near the center of the stack, or be attached to the pitot tube as directed in Section 6.3 of Method 2.

6.1.4 Sample Train Connectors.

6.1.4.1 Use thick wall flexible plastic tubing (polyethylene, polypropylene, or polyvinyl chloride) ~ 6.4-mm (¼-in.) to 9.5-mm (⅜-in.) ID to connect the train components.

6.1.4.2 A combination of rigid plastic tubing and thin wall flexible tubing may be used as long as tubing walls do not collapse when leak-checking the train. Metal tubing cannot be used.

6.1.5 Impingers. Three, one-quart capacity, glass canning jars with vacuum seal lids, or three Greenburg-Smith (GS) design impingers connected in series, or equivalent, may be used.

6.1.5.1 One-quart glass canning jar. Three separate jar containers are required: (1) the first jar contains the absorbing solution; (2) the second is empty and is used to collect any reagent carried over from the first container; and (3) the third contains the desiccant drying agent.

6.1.5.2 Canning Jar Connectors. The jar containers are connected by leak-tight inlet and outlet tubes installed in the lids of each container for assembly with the train. The tubes may be made of ~ 6.4 mm (¼-in.) ID glass or rigid plastic tubing. For the inlet tube of the first impinger, heat the glass or plastic tubing and draw until the tubing separates. Fabricate the necked tip to form an orifice tip that is approximately 2.4 mm (3⁄32-in.) ID.

6.1.5.2.1 When assembling the first container, place the orifice tip end of the tube approximately 4.8 mm (3⁄16-in.) above the inside bottom of the jar.

6.1.5.2.2 For the second container, the inlet tube need not be drawn and sized, but the tip should be approximately 25 mm (1 in.) above the bottom of the jar.

6.1.5.2.3 The inlet tube of the third container should extend to approximately 12.7 mm (½-in.) above the bottom of the jar.

6.1.5.2.4 Extend the outlet tube for each container approximately 50 mm (2 in.) above the jar lid and downward through the lid, approximately 12.7 mm (½-in.) beneath the bottom of the lid.

6.1.5.3 Greenburg-Smith Impingers. Three separate impingers of the Greenburg-Smith (GS) design as described in Section 6.0 of Method 5 are required. The first GS impinger shall have a standard tip (orifice/plate), and the second and third GS impingers shall be modified by replacing the orifice/plate tube with a 13 mm (½-in.) ID glass tube, having an unrestricted opening located 13 mm (½-in.) from the bottom of the outer flask.

6.1.5.4 Greenburg-Smith Connectors. The GS impingers shall be connected by leak-free ground glass ''U'' tube connectors or by leak-free non-contaminating flexible tubing. The first impinger shall contain the absorbing solution, the second is empty and the third contains the desiccant drying agent.

6.1.6 Manometer. Inclined/vertical type, or equivalent device, as described in Section 6.2 of Method 2 (40 CFR Part 60, Appendix A).

6.1.7 Critical Orifice. The critical orifice is a small restriction in the sample line that is located upstream of the vacuum pump. The orifice produces a constant sampling flow rate that is approximately 0.021 cubic meters per minute ($m^3$/min) or 0.75 cubic feet per minute (cfm).

6.1.7.1 The critical orifice can be constructed by sealing a 2.4-mm (3⁄32-in.) ID brass tube approximately 14.3 mm (9⁄16-in.) in length inside a second brass tube that is approximately 8 mm (5⁄16-in.) ID and 14.3-mm (9⁄16-in.) in length .

6.1.7.2 Materials other than brass can be used to construct the critical orifice as long as the flow through the sampling train can be maintained at approximately 0.021 cubic meter per minute (0.75) cfm.

6.1.8 Connecting Hardware. Standard pipe and fittings, 9.5-mm (⅜-in.), 6.4-mm (¼-in.)

or 3.2-mm (⅛-in.) ID, may be used to assemble the vacuum pump, dry gas meter and other sampling train components.

6.1.9 Vacuum Gauge. Capable of measuring approximately 760 mm $H_g$ (30 in. $H_g$) vacuum in 25.4 mm $H_G$ (1 in. $H_g$) increments. Locate vacuum gauge between the critical orifice and the vacuum pump.

6.1.10 Pump Oiler. A glass oil reservoir with a wick mounted at the vacuum pump inlet that lubricates the pump vanes. The oiler should be an in-line type and not vented to the atmosphere. See EMTIC Guideline Document No. GD-041.WPD for additional information.

6.1.11 Vacuum Pump. Gast Model 0522–V103–G18DX, or equivalent, capable of delivering at least 1.5 cfm at 15 in. $H_g$ vacuum.

6.1.12 Oil Trap/Muffler. An empty glass oil reservoir without wick mounted at the pump outlet to control the pump noise and prevent oil from reaching the dry gas meter.

6.1.13 By-pass Fine Adjust Valve (Optional). Needle valve assembly 6.4-mm (¼-in.), Whitey 1 RF 4–A, or equivalent, that allows for adjustment of the train vacuum.

6.1.13.1 A fine-adjustment valve is positioned in the optional pump by-pass system that allows the gas flow to recirculate through the pump. This by-pass system allows the tester to control/reduce the maximum leak-check vacuum pressure produced by the pump.

6.1.13.1.1 The tester must conduct the post test leak check at a vacuum equal to or greater than the maximum vacuum encountered during the sampling run.

6.1.13.1.2 The pump by-pass assembly is not required, but is recommended if the tester intends to leak-check the 306A train at the vacuum experienced during a run.

6.1.14 Dry Gas Meter. An Equimeter Model 110 test meter or, equivalent with temperature sensor(s) installed (inlet/outlet) to monitor the meter temperature. If only one temperature sensor is installed, locate the sensor at the outlet side of the meter. The dry gas meter must be capable of measuring the gaseous volume to within ±2% of the true volume.

NOTE: The Method 306 sampling train is also commercially available and may be used to perform the Method 306A tests. The sampling train may be assembled as specified in Method 306A with the sampling rate being operated at the delta $H_@$ specified for the calibrated orifice located in the meter box. The Method 306 train is then operated as described in Method 306A.

6.2 Barometer. Mercury aneroid barometer, or other barometer equivalent, capable of measuring atmospheric pressure to within ±2.5 mm $H_g$ (0.1 in. $H_g$).

6.2.1 A preliminary check of the barometer shall be made against a mercury-in-glass reference barometer or its equivalent.

6.2.2 Tester may elect to obtain the absolute barometric pressure from a nearby National Weather Service station.

6.2.2.1 The station value (which is the absolute barometric pressure) must be adjusted for elevation differences between the weather station and the sampling location. Either subtract 2.5 mm $H_g$ (0.1 in. $H_g$) from the station value per 30 m (100 ft) of elevation increase or add the same for an elevation decrease.

6.2.2.2 If the field barometer cannot be adjusted to agree within 0.1 in. $H_g$ of the reference barometric, repair or discard the unit. The barometer pressure measurement shall be recorded on the sampling data sheet.

6.3 Sample Recovery. Same as Method 5, Section 6.2 (40 CFR Part 60, Appendix A), with the following exceptions:

6.3.1 Probe-Liner and Probe-Nozzle Brushes. Brushes are not necessary for sample recovery. If a probe brush is used, it must be non-metallic.

6.3.2 Wash Bottles. Polyethylene wash bottle, for sample recovery absorbing solution.

6.3.3 Sample Recovery Solution. Use 0.1 N NaOH or 0.1 N $NaHCO_3$, whichever is used as the impinger absorbing solution, to replace the acetone.

6.3.4 Sample Storage Containers.

6.3.4.1 Glass Canning Jar. The first canning jar container of the sampling train may serve as the sample shipping container. A new lid and sealing plastic wrap shall be substituted for the container lid assembly.

6.3.4.2 Polyethylene or Glass Containers. Transfer the Greenburg-Smith impinger contents to precleaned polyethylene or glass containers. The samples shall be stored and shipped in 250-mL, 500-mL or 1000-mL polyethylene or glass containers with leak-free, non metal screw caps.

6.3.5 pH Indicator Strip, for $Cr^{+6}$ Samples. pH indicator strips, or equivalent, capable of determining the pH of solutions between the range of 7 and 12, at 0.5 pH increments.

6.3.6 Plastic Storage Containers. Air tight containers to store silica gel.

6.4 Analysis. Same as Method 306, Section 6.3.

*7.0 Reagents and Standards.*

NOTE: Unless otherwise indicated, all reagents shall conform to the specifications established by the Committee on Analytical Reagents of the American Chemical Society (ACS reagent grade). Where such specifications are not available, use the best available grade. It is recommended, but not required, that reagents be checked by the appropriate analysis prior to field use to assure that contamination is below the analytical detection limit for the ICP or GFAAS total chromium analysis; and that contamination is below the analytical detection limit for

$Cr^{+6}$ using IC/PCR for direct injection or, if selected, preconcentration.

7.1 Sampling.

7.1.1 Water. Reagent water that conforms to ASTM Specification D1193 Type II (incorporated by reference see §63.14). All references to water in the method refer to reagent water unless otherwise specified. It is recommended that water blanks be checked prior to preparing the sampling reagents to ensure that the Cr content is less than three (3) times the anticipated detection limit of the analytical method.

7.1.2 Sodium Hydroxide (NaOH) Absorbing Solution, 0.1 N. Dissolve 4.0 g of sodium hydroxide in 1 liter of water to obtain a pH of approximately 8.5.

7.1.3 Sodium Bicarbonate ($NaHCO_3$) Absorbing Solution, 0.1 N. Dissolve approximately 8.5 g of sodium bicarbonate in 1 liter of water to obtain a pH of approximately 8.3.

7.1.4 Chromium Contamination.

7.1.4.1 The absorbing solution shall not exceed the QC criteria noted in Method 306, Section 7.1.1 (≤3 times the instrument detection limit).

7.1.4.2 When the $Cr^{+6}$ content in the field samples exceeds the blank concentration by at least a factor of ten (10), $Cr^{+6}$ blank levels ≤10 times the detection limit will be allowed.

NOTE: At sources with high concentrations of acids and/or $SO_2$, the concentration of NaOH or $NaHCO_3$ should be ≥0.5 N to insure that the pH of the solution remains at or above 8.5 for NaOH and 8.0 for $NaHCO_3$ during and after sampling.

7.1.3 Desiccant. Silica Gel, 6–16 mesh, indicating type. Alternatively, other types of desiccants may be used, subject to the approval of the Administrator.

7.2 Sample Recovery. Same as Method 306, Section 7.2.

7.3 Sample Preparation and Analysis. Same as Method 306, Section 7.3.

7.4 Glassware Cleaning Reagents. Same as Method 306, Section 7.4.

*8.0 Sample Collection, Recovery, Preservation, Holding Times, Storage, and Transport*

NOTE: Prior to sample collection, consideration should be given as to the type of analysis ($Cr^{+6}$ or total Cr) that will be performed. Deciding which analysis will be performed will enable the tester to determine which appropriate sample recovery and storage procedures will be required to process the sample.

8.1 Sample Collection.

8.1.1 Pretest Preparation.

8.1.1.1 Selection of Measurement Site. Locate the sampling ports as specified in Section 11.0 of Method 1 (40 CFR Part 60, Appendix A).

8.1.1.2 Location of Traverse Points.

8.1.1.2.1 Locate the traverse points as specified in Section 11.0 of Method 1 (40 CFR Part 60, Appendix A). Use a total of 24 sampling points for round ducts and 24 or 25 points for rectangular ducts. Mark the pitot and sampling probe to identify the sample traversing points.

8.1.1.2.2 For round ducts less than 12 inches in diameter, use a total of 16 points.

8.1.1.3 Velocity Pressure Traverse. Perform an initial velocity traverse before obtaining samples. The Figure 306A–2 data sheet may be used to record velocity traverse data.

8.1.1.3.1 To demonstrate that the flow rate is constant over several days of testing, perform complete traverses at the beginning and end of each day's test effort, and calculate the deviation of the flow rate for each daily period. The beginning and end flow rates are considered constant if the deviation does not exceed 10 percent. If the flow rate exceeds the 10 percent criteria, either correct the inconsistent flow rate problem, or obtain the Administrator's approval for the test results.

8.1.1.3.2 Perform traverses as specified in Section 8.0 of Method 2, but record only the Δp (velocity pressure) values for each sampling point. If a mass emission rate is desired, stack velocity pressures shall be recorded before and after each test, and an average stack velocity pressure determined for the testing period.

8.1.1.4 Verification of Absence of Cyclonic Flow. Check for cyclonic flow during the initial traverse to verify that it does not exist. Perform the cyclonic flow check as specified in Section 11.4 of Method 1 (40 CFR Part 60, Appendix A).

8.1.1.4.1 If cyclonic flow is present, verify that the absolute average angle of the tangential flow does not exceed 20 degrees. If the average value exceeds 20 degrees at the sampling location, the flow condition in the stack is unacceptable for testing.

8.1.1.4.2 Alternative procedures, subject to approval of the Administrator, *e.g.*, installing straightening vanes to eliminate the cyclonic flow, must be implemented prior to conducting the testing.

8.1.1.5 Stack Gas Moisture Measurements. *Not required.* Measuring the moisture content is optional when a mass emission rate is to be calculated.

8.1.1.5.1 The tester may elect to either measure the actual stack gas moisture during the sampling run or utilize a nominal moisture value of 2 percent.

8.1.1.5.2 For additional information on determining sampling train moisture, please refer to Method 4 (40 CFR Part 60, Appendix A).

8.1.1.6 Stack Temperature Measurements. If a mass emission rate is to be calculated, a temperature sensor must be placed either near the center of the stack, or attached to the pitot tube as described in Section 8.3 of Method 2. Stack temperature measurements,

shall be recorded before and after each test, and an average stack temperature determined for the testing period.

8.1.1.7 Point Sampling Times. Since the sampling rate of the train (0.75 cfm) is maintained constant by the critical orifice, it is necessary to calculate specific sampling times for each traverse point in order to obtain a proportional sample.

8.1.1.7.1 If the sampling period (3 runs) is to be completed in a single day, the point sampling times shall be calculated only once.

8.1.1.7.2 If the sampling period is to occur over several days, the sampling times must be calculated daily using the initial velocity pressure data recorded for that day. Determine the average of the Δp values obtained during the velocity traverse (Figure 306A–2).

8.1.1.7.3 If the stack diameter is less than 12 inches, use 7.5 minutes in place of 5 minutes in the equation and 16 sampling points instead of 24 or 25 points. Calculate the sampling times for each traverse point using the following equation:

$$\text{Minutes at point n} = \frac{\sqrt{\Delta p \text{ at Point n}}}{\left(\sqrt{\Delta p}\right)_{avg}} \times 5 \text{ min.} \qquad \text{Eq. 306A-1}$$

Where:

n = Sampling point number.

Δp = Average pressure differential across pitot tube, mm $H_2O$ (in. $H_2O$).

$\Delta P_{avg}$ = Average of Δp values, mm $H_2O$ (in. $H_2O$).

NOTE: Convert the decimal fractions for minutes to seconds.

8.1.1.8 Pretest Preparation. It is recommended, but not required, that all items which will be in contact with the sample be cleaned prior to performing the testing to avoid possible sample contamination (positive chromium bias). These items include, but are not limited to: Sampling probe, connecting tubing, impingers, and jar containers.

8.1.1.8.1 Sample train components should be: (1) Rinsed with hot tap water; (2) washed with hot soapy water; (3) rinsed with tap water; (4) rinsed with reagent water; (5) soaked in a 10 percent (v/v) nitric acid solution for at least four hours; and (6) rinsed throughly with reagent water before use.

8.1.1.8.2 At a minimum, the tester should, rinse the probe, connecting tubing, and first and second impingers twice with either 0.1 N sodium hydroxide (NaOH) or 0.1 N sodium bicarbonate ($NaHCO_3$) and discard the rinse solution.

8.1.1.8.3 If separate sample shipping containers are to be used, these also should be precleaned using the specified cleaning procedures.

8.1.1.9 Preparation of Sampling Train. Assemble the sampling train as shown in Figure 306A–1. Secure the nozzle-liner assembly to the outer sheath to prevent movement when sampling.

8.1.1.9.1 Place 250 mL of 0.1 N NaOH or 0.1 N $NaHCO_3$ absorbing solution into the first jar container or impinger. The second jar/impinger is to remain empty. Place 6 to 16 mesh indicating silica gel, or equivalent desiccant into the third jar/impinger until the container is half full (~ 300 to 400 g).

8.1.1.9.2 Place a small cotton ball in the outlet exit tube of the third jar to collect small silica gel particles that may dislodge and impair the pump and/or gas meter.

8.1.1.10 Pretest Leak-Check. A pretest leak-check is recommended, but not required. If the tester opts to conduct the pretest leak-check, the following procedures shall be performed: (1) Place the jar/impinger containers into an ice bath and wait 10 minutes for the ice to cool the containers before performing the leak check and/or start sampling; (2) to perform the leak check, seal the nozzle using a piece of clear plastic wrap placed over the end of a finger and switch on the pump; and (3) the train system leak rate should not exceed 0.02 cfm at a vacuum of 380 mm Hg (15 in. Hg) or greater. If the leak rate does exceed the 0.02 cfm requirement, identify and repair the leak area and perform the leak check again.

NOTE: Use caution when releasing the vacuum following the leak check. Always allow air to slowly flow through the nozzle end of the train system while the pump is still operating. Switching off the pump with vacuum on the system may result in the silica gel being pulled into the second jar container.

8.1.1.11 Leak-Checks During Sample Run. If, during the sampling run, a component (e.g., jar container) exchange becomes necessary, a leak-check shall be conducted *immediately before* the component exchange is made. The leak-check shall be performed according to the procedure outlined in Section 8.1.1.10 of this method. If the leakage rate is found to be ≤0.02 cfm at the maximum operating vacuum, the results are acceptable. If,

however, a higher leak rate is obtained, either record the leakage rate and correct the sample volume as shown in Section 12.3 of Method 5 or void the sample and initiate a replacement run. Following the component change, leak-checks are optional, but are recommended as are the pretest leak-checks.

8.1.1.12 Post Test Leak Check. Remove the probe assembly and flexible tubing from the first jar/impinger container. Seal the inlet tube of the first container using clear plastic wrap and switch on the pump. The vacuum in the line between the pump and the critical orifice must be ≥15 in. Hg. Record the vacuum gauge measurement along with the leak rate observed on the train system.

8.1.1.12.1 If the leak rate does not exceed 0.02 cfm, the results are acceptable and no sample volume correction is necessary.

8.1.1.12.2 If, however, a higher leak rate is obtained (>0.02 cfm), the tester shall either record the leakage rate and correct the sample volume as shown in Section 12.3 of Method 5, or void the sampling run and initiate a replacement run. After completing the leak-check, slowly release the vacuum at the first container while the pump is still operating. Afterwards, switch-off the pump.

8.1.2 Sample Train Operation.

8.1.2.1 Data Recording. Record all pertinent process and sampling data on the data sheet (see Figure 306A–3). Ensure that the process operation is suitable for sample collection.

8.1.2.2 Starting the Test. Place the probe/nozzle into the duct at the first sampling point and switch on the pump. Start the sampling using the time interval calculated for the first point. When the first point sampling time has been completed, move to the second point and continue to sample for the time interval calculated for that point; sample each point on the traverse in this manner. Maintain ice around the sample containers during the run.

8.1.2.3 Critical Flow. The sample line between the critical orifice and the pump must operate at a vacuum of ≥380 mm Hg (≥15 in. Hg) in order for critical flow to be maintained. This vacuum must be monitored and documented using the vacuum gauge located between the critical orifice and the pump.

NOTE: Theoretically, critical flow for air occurs when the ratio of the orifice outlet absolute pressure to the orifice inlet absolute pressure is less than a factor of 0.53. This means that the system vacuum should be at least ≥356 mm Hg (≥14 in. Hg) at sea level and ~ 305 mm Hg (~ 12 in. Hg) at higher elevations.

8.1.2.4 Completion of Test.

8.1.2.4.1 Circular Stacks. Complete the first port traverse and switch off the pump. Testers may opt to perform a leak-check between the port changes to verify the leak rate however, this is not mandatory. Move the sampling train to the next sampling port and repeat the sequence. Be sure to record the final dry gas meter reading after completing the test run. After performing the post test leak check, disconnect the jar/impinger containers from the pump and meter assembly and transport the probe, connecting tubing, and containers to the sample recovery area.

8.1.2.4.2 Rectangle Stacks. Complete each port traverse as per the instructions provided in 8.1.2.4.1.

NOTE: If an approximate mass emission rate is to be calculated, measure and record the stack velocity pressure and temperature before and after the test run.

8.2 Sample Recovery. After the train has been transferred to the sample recovery area, disconnect the tubing that connects the jar/impingers. The tester shall select either the total Cr or $Cr^{+6}$ sample recovery option. Samples to be analyzed for both total Cr and $Cr^{+6}$ shall be recovered using the $Cr^{+6}$ sample option (Section 8.2.2).

NOTE: Collect a reagent blank sample for each of the total Cr or the $Cr^{+6}$ analytical options. If both analyses (Cr and $Cr^{+6}$) are to be conducted on the samples, collect separate reagent blanks for each analysis. Also, since particulate matter is not usually present at chromium electroplating and/or chromium anodizing operations, it is not necessary to filter the $Cr^{+6}$ samples unless there is observed sediment in the collected solutions. If it is necessary to filter the $Cr^{+6}$ solutions, please refer to Method 0061, Determination of Hexavalent Chromium Emissions from Stationary Sources, Section 7.4, Sample Preparation in SW–846 (see Reference 1).

8.2.1 Total Cr Sample Option.

8.2.1.1 Shipping Container No. 1. The first jar container may either be used to store and transport the sample, or if GS impingers are used, samples may be stored and shipped in precleaned 250-mL, 500-mL or 1000-mL polyethylene or glass bottles with leak-free, nonmetal screw caps.

8.2.1.1.1 Unscrew the lid from the first jar/impinger container.

8.2.1.1.2 Lift the inner tube assembly almost out of the container, and using the wash bottle containing fresh absorbing solution, rinse the outside of the tube that was immersed in the container solution; rinse the inside of the tube as well, by rinsing twice from the top of the tube down through the inner tube into the container.

8.2.1.2 Recover the contents of the second jar/impinger container by removing the lid and pouring any contents into the first shipping container.

8.2.1.2.1 Rinse twice, using fresh absorbing solution, the inner walls of the second container including the inside and outside of the inner tube.

8.2.1.2.2 Rinse the connecting tubing between the first and second sample containers with absorbing solution and place the rinses into the first container.

8.2.1.3 Position the nozzle, probe and connecting plastic tubing in a vertical position so that the tubing forms a ''U''.

8.2.1.3.1 Using the wash bottle, partially fill the tubing with fresh absorbing solution. Raise and lower the end of the plastic tubing several times to allow the solution to contact the internal surfaces. Do not allow the solution to overflow or part of the sample will be lost. Place the nozzle end of the probe over the mouth of the first container and elevate the plastic tubing so that the solution flows into the sample container.

8.2.1.3.2 Repeat the probe/tubing sample recovery procedure but allow the solution to flow out the opposite end of the plastic tubing into the sample container. Repeat the entire sample recovery procedure once again.

8.2.1.4 Use approximately 200 to 300 mL of the 0.1 N NaOH or 0.1 N $NaHCO_3$ absorbing solution during the rinsing of the probe nozzle, probe liner, sample containers, and connecting tubing.

8.2.1.5 Place a piece of clear plastic wrap over the mouth of the sample jar to seal the shipping container. Use a standard lid and band assembly to seal and secure the sample in the jar.

8.2.1.5.1 Label the jar clearly to identify its contents, sample number and date.

8.2.1.5.2 Mark the height of the liquid level on the container to identify any losses during shipping and handling.

8.2.1.5.3 Prepare a chain-of-custody sheet to accompany the sample to the laboratory.

8.2.2 $Cr^{+6}$ Sample Option.

8.2.2.1 Shipping Container No. 1. The first jar container may either be used to store and transport the sample, or if GS impingers are used, samples may be stored and shipped in precleaned 250-mL, 500-mL or 1000-mL polyethylene or glass bottles with leak-free nonmetal screw caps.

8.2.2.1.1 Unscrew and remove the lid from the first jar container.

8.2.2.1.2 Measure and record the pH of the solution in the first container by using a pH indicator strip. The pH of the solution must be ≥8.5 for NaOH and ≥8.0 for $NaHCO_3$. If not, discard the collected sample, increase the concentration of the NaOH or NaHCO3 absorbing solution to 0.5 M and collect another air emission sample.

8.2.2.2 After measuring the pH of the first container, follow sample recovery procedures described in Sections 8.2.1.1 through 8.2.1.5.

NOTE: Since particulate matter is not usually present at chromium electroplating and/or chromium anodizing facilities, it is not necessary to filter the $Cr^{+6}$ samples unless there is observed sediment in the collected solutions. If it is necessary to filter the $Cr^{+6}$ solutions, please refer to the EPA Method 0061, Determination of Hexavalent Chromium Emissions from Stationary Sources, Section 7.4, Sample Preparation in SW–846 (see Reference 5) for procedure.

8.2.3 Silica Gel Container. Observe the color of the indicating silica gel to determine if it has been completely spent and make a notation of its condition/color on the field data sheet. Do not use water or other liquids to remove and transfer the silica gel.

8.2.4 Total Cr and/or $Cr^{+6}$ Reagent Blank.

8.2.4.1 Shipping Container No. 2. Place approximately 500 mL of the 0.1 N NaOH or 0.1 N $NaHCO_3$ absorbing solution in a precleaned, labeled sample container and include with the field samples for analysis.

8.3 Sample Preservation, Storage, and Transport.

8.3.1 Total Cr Option. Samples that are to be analyzed for total Cr need not be refrigerated.

8.3.2 $Cr^{+6}$ Option. Samples that are to be analyzed for $Cr^{+6}$ must be shipped and stored at 4 °C (~40 °F).

NOTE: Allow $Cr^{+6}$ samples to return to ambient temperature prior to analysis.

8.4 Sample Holding Times.

8.4.1 Total Cr Option. Samples that are to be analyzed for total chromium must be analyzed within 60 days of collection.

8.4.2 $Cr^{+6}$ Option. Samples that are to be analyzed for $Cr^{+6}$ must be analyzed within 14 days of collection.

### *9.0 Quality Control*

9.1 Same as Method 306, Section 9.0.

### *10.0 Calibration and Standardization*

NOTE: Tester shall maintain a performance log of all calibration results.

10.1 Pitot Tube. The Type S pitot tube assembly shall be calibrated according to the procedures outlined in Section 10.1 of Method 2.

10.2 Temperature Sensor. Use the procedure in Section 10.3 of Method 2 to calibrate the in-stack temperature sensor.

10.3 Metering System.

10.3.1 Sample Train Dry Gas Meter Calibration. Calibrations may be performed as described in Section 16.2 of Method 5 by either the manufacturer, a firm who provides calibration services, or the tester.

10.3.2 Dry Gas Meter Calibration Coefficient ($Y_m$). The meter calibration coefficient ($Y_m$) must be determined prior to the initial use of the meter, and following each field test program. If the dry gas meter is new, the manufacturer will have specified the $Y_m$ value for the meter. This $Y_m$ value can be used as the pretest value for the first test. For subsequent tests, the tester must use the $Y_m$ value established during the pretest calibration.

10.3.3 Calibration Orifice. The manufacturer may have included a calibration orifice and a summary spreadsheet with the meter that may be used for calibration purposes. The spreadsheet will provide data necessary to determine the calibration for the orifice and meter (standard cubic feet volume, sample time, etc.). These data were produced when the initial $Y_m$ value was determined for the meter.

10.3.4 $Y_m$ Meter Value Verification or Meter Calibration.

10.3.4.1 The $Y_m$ meter value may be determined by replacing the sampling train critical orifice with the calibration orifice. Replace the critical orifice assembly by installing the calibration orifice in the same location. The inlet side of the calibration orifice is to be left open to the atmosphere and is *not* to be reconnected to the sample train during the calibration procedure.

10.3.4.2 If the vacuum pump is cold, switch on the pump and allow it to operate (become warm) for several minutes prior to starting the calibration. After stopping the pump, record the initial dry gas meter volume and meter temperature.

10.3.4.3 Perform the calibration for the number of minutes specified by the manufacturer's data sheet (usually 5 minutes). Stop the pump and record the final dry gas meter volume and temperature. Subtract the start volume from the stop volume to obtain the $V_m$ and average the meter temperatures ($t_m$).

10.3.5 $Y_m$ Value Calculation. $Y_m$ is the calculated value for the dry gas meter. Calculate $Y_m$ using the following equation:

$$Y_m = \frac{V_{m(std),mfg}}{V_m\left(\frac{T_{std}}{P_{std}}\right)\left(\frac{P_{bar}}{T_m}\right)}$$

$$Y_m = \frac{V_{m(std),mfg}\,T_m}{17.64\,V_m\,P_{bar}} \qquad \text{Eq. 306A - 2}$$

Where:

$P_{bar}$ = Barometric pressure at meter, mm Hg, (in. Hg).

$P_{std}$ = Standard absolute pressure,

Metric = 760 mm Hg.

English = 29.92 in. Hg.

$t_m$ = Average dry gas meter temperature, °C, (°F).

$T_m$ = Absolute average dry gas meter temperature,

Metric °K = 273 + tm (°C).

English °R = 460 + $t_m$ (°F).

$T_{std}$ = Standard absolute temperature,

Metric = 293 °K.

English = 528 °R.

$V_m$ = Volume of gas sample as measured (actual) by dry gas meter, dcm,(dcf).

$V_{m(std),mfg}$ = Volume of gas sample measured by manufacture's calibrated orifice and dry gas meter, corrected to standard conditions (pressure/temperature) dscm (dscf).

$Y_m$ = Dry gas meter calibration factor, (dimensionless).

10.3.6 $Y_m$ Comparison. Compare the $Y_m$ value provided by the manufacturer (Section 10.3.3) or the pretest $Y_m$ value to the post test $Y_m$ value using the following equation:

$$\frac{Y_m(\text{manufacturer's or pretest value})}{Y_m(\text{post - test value})} \qquad \text{Eq. 306A - 3}$$

10.3.6.1 If this ratio is between 0.95 and 1.05, the designated $Y_m$ value for the meter is acceptable for use in later calculations.

10.3.6.1.1 If the value is outside the specified range, the test series shall either be: 1) voided and the samples discarded; or 2) calculations for the test series shall be conducted using whichever meter coefficient value (i.e., manufacturers's/pretest $Y_m$ value or post test $Y_m$ value) produces the lowest sample volume.

10.3.6.1.2 If the post test dry gas meter $Y_m$ value differs by more than 5% as compared to the pretest value, either perform the calibration again to determine acceptability or return the meter to the manufacturer for recalibration.

10.3.6.1.3 The calibration may also be conducted as specified in Section 10.3 or Section 16.0 of Method 5 (40 CFR Part 60, Appendix A), except that it is only necessary to check the calibration at one flow rate of ~ 0.75 cfm.

10.3.6.1.4 The calibration of the dry gas meter must be verified after each field test program using the same procedures.

NOTE: The tester may elect to use the $Y_m$ post test value for the next pretest $Y_m$ value; e.g., Test 1 post test $Y_m$ value and Test 2 pretest $Y_m$ value would be the same.

10.4 Barometer. Calibrate against a mercury barometer that has been corrected for temperature and elevation.

10.5 ICP Spectrometer Calibration. Same as Method 306, Section 10.2.

10.6 GFAA Spectrometer Calibration. Same as Method 306, Section 10.3.

10.7 IC/PCR Calibration. Same as Method 306, Section 10.4.

*11.0 Analytical Procedures*

NOTE: The method determines the chromium concentration in µg Cr/mL. It is important that the analyst measure the volume of the field sample prior to analyzing the sample. This will allow for conversion of µg Cr/mL to µg Cr/sample.

11.1 Analysis. Refer to Method 306 for sample preparation and analysis procedures.

*12.0 Data Analysis and Calculations*

12.1 Calculations. Perform the calculations, retaining one extra decimal point beyond that of the acquired data. When reporting final results, round number of figures consistent with the original data.

12.2 Nomenclature.

A = Cross-sectional area of stack, $m_2$ ($ft_2$).

$B_{ws}$ = Water vapor in gas stream, proportion by volume, dimensionless (assume 2 percent moisture = 0.02).

$C_p$ = Pitot tube coefficient; ''S'' type pitot coefficient usually 0.840, dimensionless.

$C_S$ = Concentration of Cr in sample solution, µg Cr/mL.

$C_{Cr}$ = Concentration of Cr in stack gas, dry basis, corrected to standard conditions µg/dscm (gr/dscf).

d = Diameter of stack, m (ft).

D = Digestion factor, dimensionless.

ER = Approximate mass emission rate, mg/hr (lb/hr).

F = Dilution factor, dimensionless.

L = Length of a square or rectangular duct, m (ft).

$M_{Cr}$ = Total Cr in each sample, µg (gr).

$M_s$ = Molecular weight of wet stack gas, wet basis, g/g-mole, (lb/lb-mole); in a nominal gas stream at 2% moisture the value is 28.62.

$P_{bar}$ = Barometric pressure at sampling site, mm Hg (in. Hg).

$P_s$ = Absolute stack gas pressure; in this case, usually the same value as the barometric pressure, mm Hg (in. Hg).

$P_{std}$ = Standard absolute pressure:

Metric = 760 mm Hg.

English = 29.92 in. Hg.

$Q_{std}$ = Average stack gas volumetric flow, dry, corrected to standard conditions, dscm/hr (dscf/hr).

$t_m$ = Average dry gas meter temperature, °C (°F).

$T_m$ = Absolute average dry gas meter temperature:

Metric °K = 273 + $t_m$ (°C).

English °R = 460 + $t_m$ (°F).

$t_s$ = Average stack temperature, °C (°F).

$T_s$ = Absolute average stack gas temperature: Metric °K = 273 + $t_s$ (°C). English °R = 460 + $t_s$ (°F).

$T_{std}$ = Standard absolute temperature: Metric = 293 °K. English = 528 °R.

$V_{ad}$ = Volume of sample aliquot after digestion (mL).

$V_{af}$ = Volume of sample aliquot after dilution (mL).

$V_{bd}$ = Volume of sample aliquot submitted to digestion (mL).

$V_{bf}$ = Volume of sample aliquot before dilution (mL).

$V_m$ = Volume of gas sample as measured (actual, dry) by dry gas meter, dcm (dcf).

$V_{mL}$ = Volume of impinger contents plus rinses (mL).

$V_{m(std)}$ = Volume of gas sample measured by the dry gas meter, corrected to standard conditions (temperature/pressure), dscm (dscf).

$v_s$ = Stack gas average velocity, calculated by Method 2, Equation 2–9, m/sec (ft/sec).

W = Width of a square or rectangular duct, m (ft).

$Y_m$ = Dry gas meter calibration factor, (dimensionless).

Δp = Velocity head measured by the Type S pitot tube, cm $H_2O$ (in. $H_2O$).

$\Delta p_{avg}$ = Average of Δp values, mm $H_2O$ (in. $H_2O$).

12.3 Dilution Factor. The dilution factor is the ratio of the volume of sample aliquot after dilution to the volume before dilution. The dilution factor is usually calculated by the laboratory. This ratio is derived by the following equation:

$$F = \frac{V_{af}}{V_{bf}} \qquad \text{Eq. 306A - 4}$$

12.4 Digestion Factor. The digestion factor is the ratio of the volume of sample aliquot after digestion to the volume before digestion. The digestion factor is usually calculated by the laboratory. This ratio is derived by the following equation.

$$D = \frac{V_{ad}}{V_{bd}} \qquad \text{Eq. 306A - 5}$$

12.5 Total Cr in Sample. Calculate $M_{Cr}$, the total μg Cr in each sample, using the following equation:

$$M_{Cr} = V_{mL} \times C_S \times F \times D \qquad \text{Eq. 306A - 6}$$

12.6 Dry Gas Volume. Correct the sample volume measured by the dry gas meter to standard conditions (20 °C, 760 mm Hg or 68 °F, 29.92 in. Hg) using the following equation:

$$V_{m(std)} = V_m Y_m \left(\frac{T_{std}}{T_m}\right)\left(\frac{P_{bar}}{P_{std}}\right) = K_1 V_m Y_m \left(\frac{P_{bar}}{T_m}\right) \qquad \text{Eq. 306A - 7}$$

Where:

$K_1$ = Metric units—0.3855 °K/mm Hg.
English units—17.64 °R/in. Hg.

12.7 Cr Emission Concentration ($C_{Cr}$). Calculate $C_{Cr}$, the Cr concentration in the stack gas, in μg/dscm (μg/dscf) on a dry basis, corrected to standard conditions, using the following equation:

$$C_{Cr} = \frac{M_{Cr}}{V_{m(std)}} \qquad \text{Eq. 306A - 8}$$

NOTE: To convert μg/dscm (μg/dscf) to mg/dscm (mg/dscf), divide by 1000.

12.8 Stack Gas Velocity.

12.8.1 $K_p$ = Velocity equation constant:

$$\text{Metric } K_p = 34.97 \frac{m}{sec}\left[\frac{(g/g\text{-mole})(mm\ Hg)}{(^\circ K)(mm\ H_2O)}\right]^{1/2}$$

$$\text{English } K_p = 85.49 \frac{ft}{sec}\left[\frac{(lb/lb\text{-mole})(in.\ Hg)}{(^\circ R)(in.\ H_2O)}\right]^{1/2}$$

12.8.2 Average Stack Gas Velocity.

$$v_s = K_p C_p \left(\sqrt{\Delta p}\right)_{avg} \sqrt{\frac{T_{s(avg)}}{P_s M_s}}$$

$$= 34.97\ C_p \left(\sqrt{\Delta p}\right)_{avg} \sqrt{\frac{T_{s(avg)}}{P_s M_s}} \qquad \text{Eq. 306A-9}$$

12.9 Cross sectional area of stack.

$$A = \frac{\Pi d^2}{4} \text{ or } A = LW \qquad \text{Eq. 306A-10}$$

12.10 Average Stack Gas Dry Volumetric Flow Rate.

NOTE: The emission rate may be based on a nominal stack moisture content of 2 percent (0.02). To calculate an emission rate, the tester may elect to use either the nominal stack gas moisture value or the actual stack gas moisture collected during the sampling run.

Volumetric Flow Rate Equation:

$$Q_{std} = 3600\left(1 - B_{ws}\right) v_s A \left(\frac{T_{std}}{T_{s(avg)}}\right)\left(\frac{P_s}{P_{std}}\right) \qquad \text{Eq. 306A-11}$$

Where:

3600 = Conversion factor, sec/hr.

$$Q_{std} = 62{,}234\ v_s A \left( \frac{P_s}{T_{s(avg)}} \right) \qquad \text{Eq. 306A-12}$$

NOTE: To convert $Q_{std}$ from dscm/hr (dscf/hr) to dscm/min (dscf/min), divide $Q_{std}$ by 60.

12.11 Mass emission rate, mg/hr (lb/hr):

$$ER = C_{cr} \times Q_{std} \times 10^{-3}\ (mg/hr) \qquad \text{Eq. 306A-13}$$

$$ER = C_{cr} \times Q_{std} \times 1.43 \times 10^{-4}\ (lb/hr) \qquad \text{Eq. 306A-14}$$

*13.0 Method Performance*

13.1 Range. The recommended working range for all of the three analytical techniques starts at five times the analytical detection limit (see also Method 306, Section 13.2.2). The upper limit of all three techniques can be extended indefinitely by appropriate dilution.

13.2 Sensitivity.

13.2.1 Analytical Sensitivity. The estimated instrumental detection limits listed are provided as a guide for an instrumental limit. The actual method detection limits are sample and instrument dependent and may vary as the sample matrix varies.

13.2.1.1 ICP Analytical Sensitivity. The minimum estimated detection limits for ICP, as reported in Method 6010A and the recently revised Method 6010B of SW–846 (Reference 1), are 7.0 µg Cr/L and 4.7 µg Cr/L, respectively.

13.2.1.2 GFAAS Analytical Sensitivity. The minimum estimated detection limit for GFAAS, as reported in Methods 7000A and 7191 of SW–846 (Reference 1), is 1.0 µg Cr/L.

13.2.1.3 IC/PCR Analytical Sensitivity. The minimum detection limit for IC/PCR with a preconcentrator, as reported in Methods 0061 and 7199 of SW–846 (Reference 1), is 0.05 µg $Cr^{+6}$/L.

13.2.2 In-stack Sensitivity. The in-stack sensitivity depends upon the analytical detection limit, the volume of stack gas sampled, and the total volume of the impinger absorbing solution plus the rinses. Using the analytical detection limits given in Sections 13.2.1.1, 13.2.1.2, and 13.2.1.3; a stack gas sample volume of 1.7 dscm; and a total liquid sample volume of 500 mL; the corresponding in-stack detection limits are 0.0014 mg Cr/dscm to 0.0021 mg Cr/dscm for ICP, 0.00029 mg Cr/dscm for GFAAS, and 0.000015 mg $Cr^{+36}$/dscm for IC/PCR with preconcentration.

NOTE: It is recommended that the concentration of Cr in the analytical solutions be at least five times the analytical detection limit to optimize sensitivity in the analyses. Using this guideline and the same assumptions for impinger sample volume and stack gas sample volume (500 mL and 1.7 dscm, respectively), the recommended minimum stack concentrations for optimum sensitivity are 0.0068 mg Cr/dscm to 0.0103 mg Cr/dscm for ICP, 0.0015 mg Cr/dscm for GFAAS, and 0.000074 mg $Cr^{+6}$ dscm for IC/PCR with preconcentration. If required, the in-stack detection limits can be improved by either increasing the sampling time, the stack gas sample volume, reducing the volume of the digested sample for GFAAS, improving the analytical detection limits, or any combination of the three.

13.3 Precision.

13.3.1 The following precision data have been reported for the three analytical methods. In each case, when the sampling precision is combined with the reported analytical precision, the resulting overall precision may decrease.

13.3.2 Bias data is also reported for GFAAS.

13.4 ICP Precision.

13.4.1 As reported in Method 6010B of SW–846 (Reference 1), in an EPA round-robin Phase 1 study, seven laboratories applied the ICP technique to acid/distilled water matrices that had been spiked with various metal concentrates. For true values of 10, 50, and 150 µg Cr/L; the mean reported values were 10, 50, and 149 µg Cr/L; and the mean percent relative standard deviations were 18, 3.3, and 3.8 percent, respectively.

13.4.2 In another multilaboratory study cited in Method 6010B, a mean relative standard of 8.2 percent was reported for an aqueous sample concentration of approximately 3750 µg Cr/L.

13.5 GFAAS Precision. As reported in Method 7191 of SW–846 (Reference 1), in a single laboratory (EMSL), using Cincinnati, Ohio tap water spiked at concentrations of 19, 48, and 77 µg Cr/L, the standard deviations

were ±0.1, ±0.2, and ±0.8, respectively. Recoveries at these levels were 97 percent, 101 percent, and 102 percent, respectively.

13.6 IC/PCR Precision. As reported in Methods 0061 and 7199 of SW–846 (Reference 1), the precision of IC/PCR with sample preconcentration is 5 to 10 percent; the overall precision for sewage sludge incinerators emitting 120 ng/dscm of $Cr^{+6}$ and 3.5 μg/dscm of total Cr is 25 percent and 9 percent, respectively; and for hazardous waste incinerators emitting 300 ng/dscm of $Cr^{+6}$ the precision is 20 percent.

*14.0 Pollution Prevention*

14.1 The only materials used in this method that could be considered pollutants are the chromium standards used for instrument calibration and acids used in the cleaning of the collection and measurement containers/labware, in the preparation of standards, and in the acid digestion of samples. Both reagents can be stored in the same waste container.

14.2 Cleaning solutions containing acids should be prepared in volumes consistent with use to minimize the disposal of excessive volumes of acid.

14.3 To the extent possible, the containers/vessels used to collect and prepare samples should be cleaned and reused to minimize the generation of solid waste.

*15.0 Waste Management*

15.1 It is the responsibility of the laboratory and the sampling team to comply with all federal, state, and local regulations governing waste management, particularly the discharge regulations, hazardous waste identification rules, and land disposal restrictions; and to protect the air, water, and land by minimizing and controlling all releases from field operations.

15.2 For further information on waste management, consult The Waste Management Manual for Laboratory Personnel and Less is Better-Laboratory Chemical Management for Waste Reduction, available from the American Chemical Society's Department of Government Relations and Science Policy, 1155 16th Street NW, Washington, DC 20036.

*16.0 References*

1. F.R. Clay, Memo, Impinger Collection Efficiency—Mason Jars vs. Greenburg-Smith Impingers, Dec. 1989.

2. Segall, R.R., W.G. DeWees, F.R. Clay, and J.W. Brown. Development of Screening Methods for Use in Chromium Emissions Measurement and Regulations Enforcement. In: Proceedings of the 1989 EPA/A&WMA International Symposium-Measurement of Toxic and Related Air Pollutants, A&WMA Publication VIP–13, EPA Report No. 600/9–89–060, p. 785.

3. Clay, F.R., Chromium Sampling Method. In: Proceedings of the 1990 EPA/A&WMA International Symposium-Measurement of Toxic and Related Air Pollutants, A&WMA Publication VIP–17, EPA Report No. 600/9–90–026, p. 576.

4. Clay, F.R., Proposed Sampling Method 306A for the Determination of Hexavalent Chromium Emissions from Electroplating and Anodizing Facilities. In: Proceedings of the 1992 EPA/A&WMA International Symposium-Measurement of Toxic and Related Air Pollutants, A&WMA Publication VIP–25, EPA Report No. 600/R–92/131, p. 209.

5. Test Methods for Evaluating Solid Waste, Physical/Chemical Methods, SW–846, Third Edition as amended by Updates I, II, IIA, IIB, and III. Document No. 955–001–000001. Available from Superintendent of Documents, U.S. Government Printing Office, Washington, DC, November 1986.

*17.0 Tables, Diagrams, Flowcharts, and Validation Data*

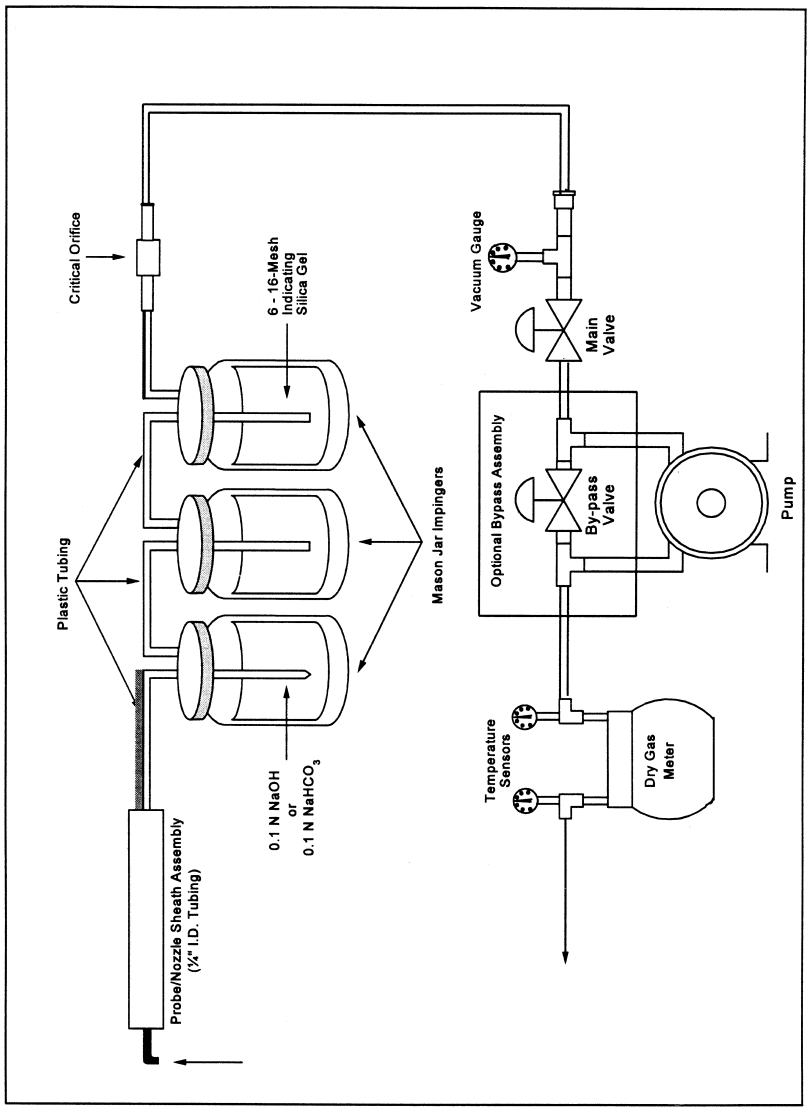


Figure 306A-1. Method 306A Sampling Train.

Plant _____

Date _____ Time _____

Location _____

Operator(s) _____

Begining stack temperature, °F _____

Ending stack temperature, °F _____

Average stack temperature, °F _____

Schematic of Points

Circle one:

Before Run 1 Before Run 2 Before Run 3 After Run No. ___

| Traverse Point Number | Cyclonic Flow Angle (Degrees) | $\Delta p$ | $\sqrt{\Delta p}$ | $\frac{\sqrt{\Delta p}}{\sqrt{\Delta p_{Avg}}}$ x 5 min = Numerical Minutes | Decimal Part of Minute x 60 = Seconds | Whole Minutes + Seconds = Sample Time |
|---|---|---|---|---|---|---|
| | | | | | | |
| | | | | | | |
| | | | | | | |

Plant _____
Sampling Site _____
Total Cr catch, M, $\mu g$ _____
Avg dry gas meter temp, $T_m$, °F _____
Meter correction factor, $Y_m$ _____
Meter volume, $V_m$, $ft^3$ _____
Barometric press, $P_{bar}$, in. Hg _____
Start clock time _____
Stop clock time _____

Date _____ Run Number _____
Operator _____
Stack radius, r, in. _____
Avg delta p, $\Delta$ p in., $H_2O$ _____
Stack temp, $T_s$, °F _____
Leak rate before run, cfm _____
Leak rate after run, cfm _____
Stop meter volume, $ft^3$ _____
Start meter volume, $ft^3$ _____

| POINT NO | SAMPLE (MIN/SEC) | GAS METER TEMP (F) | | CRITICAL ORIFICE VACUUM IN. HG |
|---|---|---|---|---|
| | | | | |
| | | | | |
| | | | | |
| | | | | |
| | | | | |
| | | | | |
| | | | | |
| | | | | |
| | | | | |
| | | | | |
| | | | | |
| | | | | |
| | | | | |
| | TOTAL | | | |
| | | AVG | | |

| POINT NO | SAMPLE (MIN/SEC) | GAS METER TEMP (F) | | CRITICAL ORIFICE VACUUM IN. HG |
|---|---|---|---|---|
| | | | | |
| | | | | |
| | | | | |
| | | | | |
| | | | | |
| | | | | |
| | | | | |
| | | | | |
| | | | | |
| | | | | |
| | | | | |
| | | | | |
| | | | | |
| | TOTAL | | | |
| | | AVG | | |

REMARKS _____

**Figure 306A-3. Chromium Constant Sampling Rate Field Data Sheet.**

METHOD 306B—SURFACE TENSION MEASUREMENT FOR TANKS USED AT DECORATIVE CHROMIUM ELECTROPLATING AND CHROMIUM ANODIZING FACILITIES

NOTE: This method does not include all of the specifications (*e.g.*, equipment and supplies) and procedures (*e.g.*, sampling and analytical) essential to its performance. Some material is incorporated by reference from other methods in 40 CFR Part 60, Appendix A and in this part. Therefore, to obtain reliable results, persons using this method should have a thorough knowledge of at least Methods 5 and 306.

*1.0 Scope and Application*

1.1 Analyte. Not applicable.

1.2 Applicability. This method is applicable to all chromium electroplating and chromium anodizing operations, and continuous chromium plating at iron and steel facilities where a wetting agent is used in the tank as the primary mechanism for reducing emissions from the surface of the plating solution.

*2.0 Summary of Method*

2.1 During an electroplating or anodizing operation, gas bubbles generated during the process rise to the surface of the liquid and burst. Upon bursting, tiny droplets of chromic acid become entrained in ambient air. The addition of a wetting agent to the tank bath reduces the surface tension of the liquid and diminishes the formation of these droplets.

2.2 This method determines the surface tension of the bath using a stalagmometer or a tensiometer to confirm that there is sufficient wetting agent present.

*3.0 Definitions* [Reserved]

*4.0 Interferences* [Reserved]

*5.0 Safety*

5.1 Disclaimer. This method may involve hazardous materials, operations, and equipment. This test method may not address all of the safety problems associated with its use. It is the responsibility of the user to establish appropriate safety and health practices and to determine the applicability of regulatory limitations prior to performing this test method.

*6.0 Equipment and Supplies*

6.1 Stalagmometer. Any commercially available stalagmometer or equivalent surface tension measuring device may be used to measure the surface tension of the plating or anodizing tank liquid provided the procedures specified in Section 11.1.2 are followed.

6.2 Tensiometer. A tensiometer may be used to measure the surface tension of the tank liquid provided the procedures specified in ASTM Method D 1331–89, Standard Test Methods for Surface and Interfacial Tension of Solutions of Surface Active Agents (incorporated by reference—see §63.14) are followed.

*7.0 Reagents and Standards* [Reserved]

*8.0 Sample Collection, Sample Recovery, Sample Preservation, Sample Holding Times, Storage, and Transport* [Reserved]

*9.0 Quality Control* [Reserved]

*10.0 Calibration and Standardization* [Reserved]

*11.0 Analytical Procedure*

11.1 Procedure. The surface tension of the tank bath may be measured using a tensiometer, stalagmometer, or any other equivalent surface tension measuring device for measuring surface tension in dynes per centimeter.

11.1.1 If a tensiometer is used, the procedures specified in ASTM Method D 1331–89 must be followed.

11.1.2 If a stalagmometer is used, the procedures specified in Sections 11.1.2.1 through 11.1.2.3 must be followed.

11.1.2.1 Check the stalagmometer for visual signs of damage. If the stalagmometer appears to be chipped, cracked, or otherwise in disrepair, the instrument shall not be used.

11.1.2.2 Using distilled or deionized water and following the procedures provided by the manufacturer, count the number of drops corresponding to the distilled/deionized water liquid volume between the upper and lower etched marks on the stalagmometer. If the number of drops for the distilled/deionized water is not within ±1 drop of the number indicated on the instrument, the stalagmometer must be cleaned, using the procedures specified in Section 11.1.3 of this method, before using the instrument to measure the surface tension of the tank liquid.

11.1.2.2.1 If the stalagmometer must be cleaned, as indicated in Section 11.1.2.2, repeat the procedure specified in Section 11.1.2.2 before proceeding.

11.1.2.2.2 If, after cleaning and performing the procedure in Section 11.1.2.2, the number of drops indicated for the distilled/deionized water is not within ±1 drop of the number indicated on the instrument, either use the number of drops corresponding to the distilled/deionized water volume as the reference number of drops, or replace the instrument.

11.1.2.3 Determine the surface tension of the tank liquid using the procedures specified by the manufacturer of the stalagmometer.

11.1.3 *Stalagmometer cleaning procedures.* The procedures specified in Sections 11.1.3.1 through 11.1.3.10 shall be used for cleaning a stalagmometer, as required by Section 11.1.2.2.

11.1.3.1 Set up the stalagmometer on its stand in a fume hood.

11.1.3.2 Place a clean 150 (mL) beaker underneath the stalagmometer and fill the beaker with reagent grade concentrated nitric acid.

11.1.3.3 Immerse the bottom tip of the stalagmometer (approximately 1 centimeter (0.5 inches)) into the beaker.

11.1.3.4 Squeeze the rubber bulb and pinch at the arrow up (1) position to collapse.

11.1.3.5 Place the bulb end securely on top end of stalagmometer and carefully draw the nitric acid by pinching the arrow up (1) position until the level is above the top etched line.

11.1.3.6 Allow the nitric acid to remain in stalagmometer for 5 minutes, then carefully remove the bulb, allowing the acid to completely drain.

11.1.3.7 Fill a clean 150 mL beaker with distilled or deionized water.

11.1.3.8 Using the rubber bulb per the instructions in Sections 11.1.3.4 and 11.1.3.5, rinse and drain stalagmometer with deionized or distilled water.

11.1.3.9 Fill a clean 150 mL beaker with isopropyl alcohol.

11.1.3.10 Again using the rubber bulb per the instructions in Sections 11.1.3.4 and 11.1.3.5, rinse and drain stalagmometer twice with isopropyl alcohol and allow the stalagmometer to dry completely.

11.2 Frequency of Measurements.

11.2.1 Measurements of the bath surface tension are performed using a progressive system which decreases the frequency of surface tension measurements required when the proper surface tension is maintained.

11.2.1.1 Initially, following the compliance date, surface tension measurements must be conducted once every 4 hours of tank operation for the first 40 hours of tank operation.

11.2.1.2 Once there are no exceedances during a period of 40 hours of tank operation, measurements may be conducted once every 8 hours of tank operation.

11.2.1.3 Once there are no exceedances during a second period of 40 consecutive hours of tank operation, measurements may be conducted once every 40 hours of tank operation on an on-going basis, until an exceedance occurs. The maximum time interval for measurements is once every 40 hours of tank operation.

11.2.2 If a measurement of the surface tension of the solution is above the 40 dynes per centimeter limit when measured using a stalagmometer, above 33 dynes per centimeter when measured using a tensiometer, or above an alternate surface tension limit established during the performance test, the time interval shall revert back to the original monitoring schedule of once every 4 hours. A subsequent decrease in frequency would then be allowed according to Section 11.2.1.

*12.0 Data Analysis and Calculations*

12.1 Log Book of Surface Tension Measurements and Fume Suppressant Additions.

12.1.1 The surface tension of the plating or anodizing tank bath must be measured as specified in Section 11.2.

12.1.2 The measurements must be recorded in the log book. In addition to the record of surface tension measurements, the frequency of fume suppressant maintenance additions and the amount of fume suppressant added during each maintenance addition must be recorded in the log book.

12.1.3 The log book will be readily available for inspection by regulatory personnel.

12.2 Instructions for Apparatus Used in Measuring Surface Tension.

12.2.1 Included with the log book must be a copy of the instructions for the apparatus used for measuring the surface tension of the plating or anodizing bath.

12.2.2 If a tensiometer is used, a copy of ASTM Method D 1331–89 must be included with the log book.

*13.0 Method Performance* [Reserved]

*14.0 Pollution Prevention* [Reserved]

*15.0 Waste Management* [Reserved]

*16.0 References* [Reserved]

*17.0 Tables, Diagrams, Flowcharts, and Validation Data* [Reserved]

## METHOD 307—DETERMINATION OF EMISSIONS FROM HALOGENATED SOLVENT VAPOR CLEANING MACHINES USING A LIQUID LEVEL PROCEDURE

*1. Applicability and Principle*

1.1 Applicability. This method is applicable to the determination of the halogenated solvent emissions from solvent vapor cleaners in the idling mode.

1.2 Principle. The solvent level in the solvent cleaning machine is measured using inclined liquid level indicators. The change in liquid level corresponds directly to the amount of solvent lost from the solvent cleaning machine.

*2. Apparatus*

NOTE: Mention of trade names or specific products does not constitute endorsement by the Environmental Protection Agency.

2.1 Inclined Liquid Level Indicator. A schematic of the inclined liquid level indicators used in this method is shown in figure 307–1; two inclined liquid level indicators having 0.05 centimeters divisions or smaller shall be used. The liquid level indicators shall be made of glass, Teflon, or any similar material that will not react with the solvent

being used. A 6-inch by 1-inch slope is recommended; however the slope may vary depending on the size and design of the solvent cleaning machine.

NOTE: It is important that the inclined liquid level indicators be constructed with ease of reading in mind. The inclined liquid level indicators should also be mounted so that they can be raised or lowered if necessary to suit the solvent cleaning machine size.

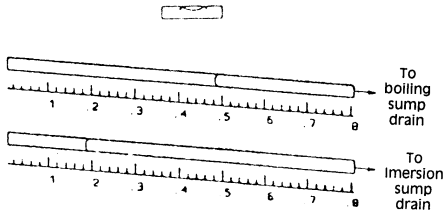


Figure 307-1. Inclined Liquid Level Indicator Apparatus.

2.2 Horizontal Indicator. Device to check the inclined liquid level indicators orientation relative to horizontal.

2.3 Velocity Meter. Hotwire and vane anemometers, or other devices capable of measuring the flow rates ranging from 0 to 15.2 meters per minute across the solvent cleaning machine.

*3. Procedure*

3.1 Connection of the Inclined Liquid Level Indicator. Connect one of the inclined liquid level indicators to the boiling sump drain and the other inclined liquid level indicator to the immersion sump drain using Teflon tubing and the appropriate fittings. A schematic diagram is shown in figure 307–2.

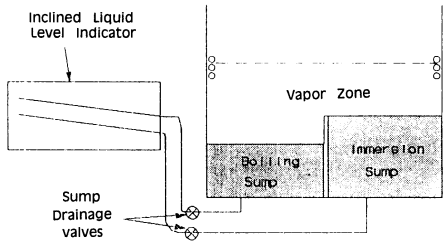


Figure 307-2. Solvent Cleaner Test Setup.

3.2 Positioning of Velocity Meter. Position the velocity meter so that it measures the flow rate of the air passing directly across the solvent cleaning machine.

3.3 Level the Inclined Liquid Level Indicators.

3.4 Initial Inclined Liquid Level Indicator Readings. Open the sump drainage valves. Allow the solvent cleaning machine to operate long enough for the vapor zone to form and the system to stabilize (check with manufacturer). Record the inclined liquid level indicators readings and the starting time on the data sheet. A sample data sheet is provided in figure 307–3.

Date _____

Run _____

Solvent type _____

Solvent density, g/m$^3$ (lb/ft$^3$) _____

Length of boiling sump ($S_B$), m (ft) _____

Width of boiling sump ($W_B$), m (ft) _____

Length of immersion sump ($S_I$), m (ft) _____

Width of immersion sump ($W_I$), m (ft) _____

Length of solvent vapor/air interface ($S_V$), m (ft) _____

Width of solvent vapor/air interface ($W_V$), m (ft) _____

| Clock time | Boiling sump reading | Immersion sump reading | Flow rate reading |
|---|---|---|---|
| | | | |

Figure 307–3. Data sheet.

3.5 Final Inclined Liquid Level Indicator Readings. At the end of the 16-hour test run, check to make sure the inclined liquid level indicators are level; if not, make the necessary adjustments. Record the final inclined liquid level indicators readings and time.

3.6 Determination of Solvent Vapor/Air Interface Area for Each Sump. Determine the area of the solvent/air interface of the individual sumps. Whenever possible, physically measure these dimensions, rather than using factory specifications. A schematic of the dimensions of a solvent cleaning machine is provided in figure 307–4.

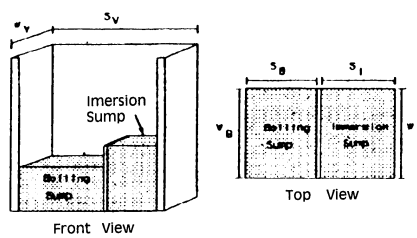


Figure 307-4. Solvent Cleaner Dimensions.

*4. Calculations*

4.1 Nomenclature.

$A_B$ = area of boiling sump interface, $m^2$ ($ft^2$).

$A_I$ = area of immersion sump interface, $m^2$ ($ft^2$).

$A_V$ = area of solvent/air interface, $m^2$ ($ft^2$).

E = emission rate, $kg/m^2$-hr ($lb/ft^2$-hr).

K = 100,000 cm . g/m . kg for metric units.

= 12 in./ft for English units.

$L_{BF}$ = final boiling sump inclined liquid level indicators reading, cm (in.).

$L_{Bi}$ = initial boiling sump inclined liquid level indicators reading, cm (in.).

$L_{If}$ = final immersion sump inclined liquid level indicators reading, cm (in.).

$L_{Ii}$ = initial immersion sump inclined liquid level indicators reading, cm (in.).

$S_B$ = length of the boiling sump, m (ft).

$S_I$ = length of the immersion sump, m (ft).

$S_V$ = length of the solvent vapor/air interface, m (ft).

$W_B$ = width of the boiling sump, m (ft).

$W_I$ = width of the immersion sump, m (ft).

$W_V$ = width of the solvent vapor/air interface, m (ft).

ρ = density of solvent, g/m3 (lb/ft3).

θ = test time, hr.

4.2 Area of Sump Interfaces. Calculate the areas of the boiling and immersion sump interfaces as follows:

$A_B = S_B W_B$ Eq. 307–1

$A_I = S_I W_I$ Eq. 307–2

4.3 Area of Solvent/Air Interface. Calculate the area of the solvent vapor/air interface as follows:

$A_V = S_V W_V$ Eq. 307–3

4.4 Emission Rate. Calculate the emission rate as follows:

$$E = \frac{\left(L_{B_f} - L_{B_i}\right)\rho A_B + \left(L_{I_f} - L_{I_i}\right)\rho A_I}{K A_V \theta}$$

Eq. 307 - 4

METHOD 308—PROCEDURE FOR DETERMINATION OF METHANOL EMISSION FROM STATIONARY SOURCES

*1.0 Scope and Application*

1.1 Analyte. Methanol. Chemical Abstract Service (CAS) No. 67–56–1.

1.2 Applicability. This method applies to the measurement of methanol emissions from specified stationary sources.

*2.0 Summary of Method*

A gas sample is extracted from the sampling point in the stack. The methanol is collected in deionized distilled water and adsorbed on silica gel. The sample is returned to the laboratory where the methanol in the water fraction is separated from other organic compounds with a gas chromatograph

(GC) and is then measured by a flame ionization detector (FID). The fraction adsorbed on silica gel is extracted with deionized distilled water and is then separated and measured by GC/FID.

*3.0 Definitions* [Reserved]

*4.0 Interferences* [Reserved]

*5.0 Safety*

5.1 Disclaimer. This method may involve hazardous materials, operations, and equipment. This test method does not purport to address all of the safety problems associated with its use. It is the responsibility of the user of this test method to establish appropriate safety and health practices and to determine the applicability of regulatory limitations before performing this test method.

5.2 Methanol Characteristics. Methanol is flammable and a dangerous fire and explosion risk. It is moderately toxic by ingestion and inhalation.

*6.0 Equipment and Supplies*

6.1 Sample Collection. The following items are required for sample collection:

6.1.1 Sampling Train. The sampling train is shown in Figure 308–1 and component parts are discussed below.

6.1.1.1 Probe. Teflon®, approximately 6-millimeter (mm) (0.24 inch) outside diameter.

6.1.1.2 Impinger. A 30-milliliter (ml) midget impinger. The impinger must be connected with leak-free glass connectors. Silicone grease may not be used to lubricate the connectors.

6.1.1.3 Adsorbent Tube. Glass tubes packed with the required amount of the specified adsorbent.

6.1.1.4 Valve. Needle valve, to regulate sample gas flow rate.

6.1.1.5 Pump. Leak-free diaphragm pump, or equivalent, to pull gas through the sampling train. Install a small surge tank between the pump and rate meter to eliminate the pulsation effect of the diaphragm pump on the rotameter.

6.1.1.6 Rate Meter. Rotameter, or equivalent, capable of measuring flow rate to within 2 percent of the selected flow rate of up to 1000 milliliter per minute (ml/min). Alternatively, the tester may use a critical orifice to set the flow rate.

6.1.1.7 Volume Meter. Dry gas meter (DGM), sufficiently accurate to measure the sample volume to within 2 percent, calibrated at the selected flow rate and conditions actually encountered during sampling, and equipped with a temperature sensor (dial thermometer, or equivalent) capable of measuring temperature accurately to within 3 °C (5.4 °F).

6.1.1.8 Barometer. Mercury (Hg), aneroid, or other barometer capable of measuring atmospheric pressure to within 2.5 mm (0.1 inch) Hg. See the NOTE in Method 5 (40 CFR part 60, appendix A), section 6.1.2.

6.1.1.9 Vacuum Gauge and Rotameter. At least 760-mm (30-inch) Hg gauge and 0- to 40-ml/min rotameter, to be used for leak-check of the sampling train.

6.2 Sample Recovery. The following items are required for sample recovery:

6.2.1 Wash Bottles. Polyethylene or glass, 500-ml, two.

6.2.2 Sample Vials. Glass, 40-ml, with Teflon®-lined septa, to store impinger samples (one per sample).

6.2.3 Graduated Cylinder. 100-ml size.

6.3 Analysis. The following are required for analysis:

6.3.1 Gas Chromatograph. GC with an FID, programmable temperature control, and heated liquid injection port.

6.3.2 Pump. Capable of pumping 100 ml/min. For flushing sample loop.

6.3.3 Flow Meter. To monitor accurately sample loop flow rate of 100 ml/min.

6.3.4 Regulators. Two-stage regulators used on gas cylinders for GC and for cylinder standards.

6.3.5 Recorder. To record, integrate, and store chromatograms.

6.3.6 Syringes. 1.0- and 10-microliter (l) size, calibrated, for injecting samples.

6.3.7 Tubing Fittings. Stainless steel, to plumb GC and gas cylinders.

6.3.8 Vials. Two 5.0-ml glass vials with screw caps fitted with Teflon®-lined septa for each sample.

6.3.9 Pipettes. Volumetric type, assorted sizes for preparing calibration standards.

6.3.10 Volumetric Flasks. Assorted sizes for preparing calibration standards.

6.3.11 Vials. Glass 40-ml with Teflon®-lined septa, to store calibration standards (one per standard).

*7.0 Reagents and Standards*

NOTE: Unless otherwise indicated, all reagents must conform to the specifications established by the Committee on Analytical Reagents of the American Chemical Society. Where such specifications are not available, use the best available grade.

7.1 Sampling. The following are required for sampling:

7.1.1 Water. Deionized distilled to conform to the American Society for Testing and Materials (ASTM) Specification D 1193–77, Type 3. At the option of the analyst, the potassium permanganate ($KMnO_4$) test for oxidizable organic matter may be omitted when high concentrations of organic matter are not expected to be present.

7.1.2 Silica Gel. Deactivated chromatographic grade 20/40 mesh silica gel packed in glass adsorbent tubes. The silica

gel is packed in two sections. The front section contains 520 milligrams (mg) of silica gel, and the back section contains 260 mg.

7.2 Analysis. The following are required for analysis:

7.2.1 Water. Same as specified in section 7.1.1.

7.2.2 [Reserved]

7.2.3 Methanol Stock Standard. Prepare a methanol stock standard by weighing 1 gram of methanol into a 100-ml volumetric flask. Dilute to 100 ml with water.

7.2.3.1 Methanol Working Standard. Prepare a methanol working standard by pipetting 1 ml of the methanol stock standard into a 100-ml volumetric flask. Dilute the solution to 100 ml with water.

7.2.3.2 Methanol Standards For Impinger Samples. Prepare a series of methanol standards by pipetting 1, 2, 5, 10, and 25 ml of methanol working standard solution respectively into five 50-ml volumetric flasks. Dilute the solutions to 50 ml with water. These standards will have 2, 4, 10, 20, and 50 μg/ml of methanol, respectively. After preparation, transfer the solutions to 40-ml glass vials capped with Teflon® septa and store the vials under refrigeration. Discard any excess solution.

7.2.3.3 Methanol Standards for Adsorbent Tube Samples. Prepare a series of methanol standards by first pipetting 10 ml of the methanol working standard into a 100-ml volumetric flask and diluting the contents to exactly 100 ml with deionized distilled water. This standard will contain 10 μg/ml of methanol. Pipette 5, 15, and 25 ml of this standard, respectively, into three 50-ml volumetric flasks. Dilute each solution to 50 ml with deionized distilled water. These standards will have 1, 3, and 5 μg/ml of methanol, respectively. Transfer all four standards into 40-ml glass vials capped with Teflon®-lined septa and store under refrigeration. Discard any excess solution.

7.2.4 GC Column. Capillary column, 30 meters (100 feet) long with an inside diameter (ID) of 0.53 mm (0.02 inch), coated with DB 624 to a film thickness of 3.0 micrometers, (μm) or an equivalent column. Alternatively, a 30-meter capillary column coated with polyethylene glycol to a film thickness of 1 μm such as AT-WAX or its equivalent.

7.2.5 Helium. Ultra high purity.

7.2.6 Hydrogen. Zero grade.

7.2.7 Oxygen. Zero grade.

### *8.0 Procedure*

8.1 Sampling. The following items are required for sampling:

8.1.1 Preparation of Collection Train. Measure 20 ml of water into the midget impinger. The adsorbent tube must contain 520 mg of silica gel in the front section and 260 mg of silica gel in the backup section. Assemble the train as shown in Figure 308–1. An optional, second impinger that is left empty may be placed in front of the water-containing impinger to act as a condensate trap. Place crushed ice and water around the impinger.

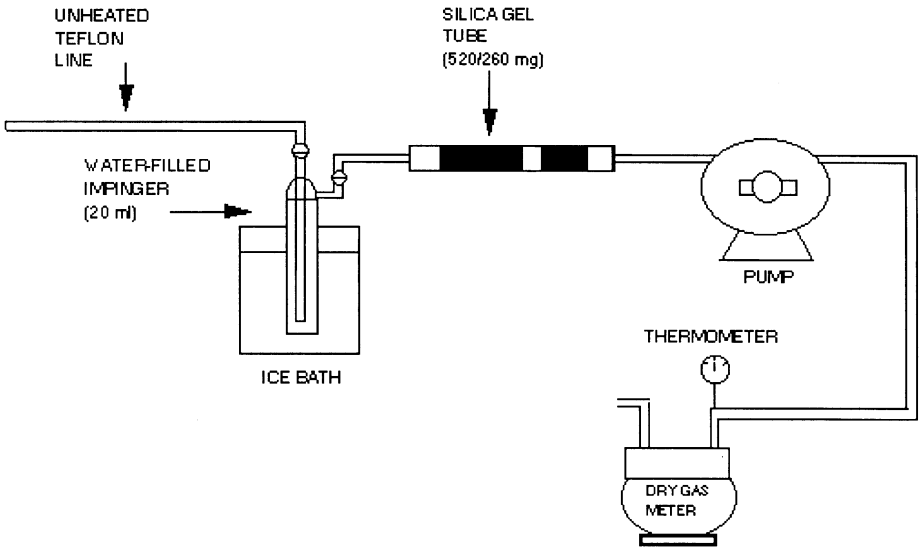


Figure 308.1. Sampling train schematic

8.1.2 Leak Check. A leak check before and after the sampling run is mandatory. The leak-check procedure is as follows:

Temporarily attach a suitable (*e.g.*, 0- to 40-ml/min) rotameter to the outlet of the DGM, and place a vacuum gauge at or near the probe inlet. Plug the probe inlet, pull a vacuum of at least 250 mm (10 inch) Hg or the highest vacuum experienced during the sampling run, and note the flow rate as indicated by the rotameter. A leakage rate in excess of 2 percent of the average sampling rate is acceptable.

NOTE: Carefully release the probe inlet plug before turning off the pump.

8.1.3 Sample Collection. Record the initial DGM reading and barometric pressure. To begin sampling, position the tip of the Teflon® tubing at the sampling point, connect the tubing to the impinger, and start the pump. Adjust the sample flow to a constant rate between 200 and 1000 ml/min as indicated by the rotameter. Maintain this constant rate (±10 percent) during the entire sampling run. Take readings (DGM, temperatures at DGM and at impinger outlet, and rate meter) at least every 5 minutes. Add more ice during the run to keep the temperature of the gases leaving the last impinger at 20 °C (68 °F) or less. At the conclusion of each run,

turn off the pump, remove the Teflon® tubing from the stack, and record the final readings. Conduct a leak check as in section 8.1.2. (This leak check is mandatory.) If a leak is found, void the test run or use procedures acceptable to the Administrator to adjust the sample volume for the leakage.

8.2 Sample Recovery. The following items are required for sample recovery:

8.2.1 Impinger. Disconnect the impinger. Pour the contents of the midget impinger into a graduated cylinder. Rinse the midget impinger and the connecting tubes with water, and add the rinses to the graduated cylinder. Record the sample volume. Transfer the sample to a glass vial and cap with a Teflon® septum. Discard any excess sample. Place the samples in an ice chest for shipment to the laboratory.

8.2.2. Adsorbent Tubes. Seal the silica gel adsorbent tubes and place them in an ice chest for shipment to the laboratory.

*9.0 Quality Control*

9.1 Miscellaneous Quality Control Measures. The following quality control measures are required:

| Section | Quality control measure | Effect |
|---|---|---|
| 8.1.2, 8.1.3, 10.1 | Sampling equipment leak check and calibration | Ensures accurate measurement of sample volume. |
| 10.2 | GC calibration | Ensures precision of GC analysis. |
| 13.0 | Methanol spike recovery check | Verifies all methanol in stack gas is being captured in impinge/adsorbent tube setup. |

*10.0 Calibration and Standardization*

10.1 Metering System. The following items are required for the metering system:

10.1.1 Initial Calibration.

10.1.1.1 Before its initial use in the field, first leak-check the metering system (drying tube, needle valve, pump, rotameter, and DGM) as follows: Place a vacuum gauge at the inlet to the drying tube, and pull a vacuum of 250 mm (10 inch) Hg; plug or pinch off the outlet of the flow meter, and then turn off the pump. The vacuum shall remain stable for at least 30 seconds. Carefully release the vacuum gauge before releasing the flow meter end.

10.1.1.2 Next, remove the drying tube, and calibrate the metering system (at the sampling flow rate specified by the method) as follows: Connect an appropriately sized wet test meter (e.g., 1 liter per revolution (0.035 cubic feet per revolution)) to the inlet of the drying tube. Make three independent calibrations runs, using at least five revolutions of the DGM per run. Calculate the calibration factor, Y (wet test meter calibration volume divided by the DGM volume, both volumes adjusted to the same reference temperature and pressure), for each run, and average the results. If any Y-value deviates by more than 2 percent from the average, the metering system is unacceptable for use. Otherwise, use the average as the calibration factor for subsequent test runs.

10.1.2 Posttest Calibration Check. After each field test series, conduct a calibration check as in section 10.1.1 above, except for the following variations: (a) The leak check is not to be conducted, (b) three, or more revolutions of the DGM may be used, and (c) only two independent runs need be made. If the calibration factor does not deviate by more than 5 percent from the initial calibration factor (determined in section 10.1.1), then the DGM volumes obtained during the test series are acceptable. If the calibration factor deviates by more than 5 percent, recalibrate the metering system as in section 10.1.1, and for the calculations, use the calibration factor (initial or recalibration) that yields the lower gas volume for each test run.

10.1.3 Temperature Sensors. Calibrate against mercury-in-glass thermometers. An alternative mercury-free thermometer may be used if the thermometer is, at a minimum, equivalent in terms of performance or suitably effective for the specific temperature measurement application.

10.1.4 Rotameter. The rotameter need not be calibrated, but should be cleaned and maintained according to the manufacturer's instruction.

10.1.5 Barometer. Calibrate against a mercury barometer.

10.2 Gas Chromatograph. The following procedures are required for the gas chromatograph:

10.2.1 Initial Calibration. Inject 1 µl of each of the standards prepared in sections 7.2.3.3 and 7.2.3.4 into the GC and record the response. Repeat the injections for each standard until two successive injections agree within 5 percent. Using the mean response for each calibration standard, prepare a linear least squares equation relating the response to the mass of methanol in the sample. Perform the calibration before analyzing each set of samples.

10.2.2 Continuing Calibration. At the beginning of each day, analyze the mid level calibration standard as described in section 10.5.1. The response from the daily analysis must agree with the response from the initial calibration within 10 percent. If it does not, the initial calibration must be repeated.

*11.0 Analytical Procedure*

11.1 Gas Chromatograph Operating Conditions. The following operating conditions are required for the GC:

11.1.1 Injector. Configured for capillary column, splitless, 200 °C (392 °F).

11.1.2 Carrier. Helium at 10 ml/min.

11.1.3 Oven. Initially at 45 °C for 3 minutes; then raise by 10 °C to 70 °C; then raise by 70 °C/min to 200 °C.

11.2 Impinger Sample. Inject 1 µl of the stored sample into the GC. Repeat the injection and average the results. If the sample response is above that of the highest calibration standard, either dilute the sample until it is in the measurement range of the calibration line or prepare additional calibration standards. If the sample response is below that of the lowest calibration standard, prepare additional calibration standards. If additional calibration standards are prepared, there shall be at least two that bracket the response of the sample. These standards should produce approximately 50 percent and 150 percent of the response of the sample.

11.3 Silica Gel Adsorbent Sample. The following items are required for the silica gel adsorbent samples:

11.3.1 Preparation of Samples. Extract the front and backup sections of the adsorbent tube separately. With a file, score the glass adsorbent tube in front of the first section of silica gel. Break the tube open. Remove and discard the glass wool. Transfer the first section of the silica gel to a 5-ml glass vial and stopper the vial. Remove the spacer between the first and second section of the adsorbent tube and discard it. Transfer the second section of silica gel to a separate 5-ml glass vial and stopper the vial.

11.3.2 Desorption of Samples. Add 3 ml of deionized distilled water to each of the stoppered vials and shake or vibrate the vials for 30 minutes.

11.3.3 Inject a 1-µl aliquot of the diluted sample from each vial into the GC. Repeat the injection and average the results. If the sample response is above that of the highest calibration standard, either dilute the sample until it is in the measurement range of the calibration line or prepare additional calibration standards. If the sample response is below that of the lowest calibration standard, prepare additional calibration standards. If additional calibration standards are prepared, there shall be at least two that bracket the response of the sample. These standards should produce approximately 50 percent and 150 percent of the response of the sample.

*12.0 Data Analysis and Calculations*

12.1 Nomenclature.

$C_{af}$ = Concentration of methanol in the front of the adsorbent tube, µg/ml.

$C_{ab}$ = Concentration of methanol in the back of the adsorbent tube, µg/ml.

$C_i$ = Concentration of methanol in the impinger portion of the sample train,µg/ml.

E = Mass emission rate of methanol, µg/hr (lb/hr).

$m_s$ = Total mass of compound measured in impinger and on adsorbent with spiked train (mg).

$m_u$ = Total mass of compound measured in impinger and on adsorbent with unspiked train (mg).

$m_v$ = Mass per volume of spiked compound measured (mg/L).

$M_{tot}$ = Total mass of methanol collected in the sample train, µg.

$P_{bar}$ = Barometric pressure at the exit orifice of the DGM, mm Hg (in. Hg).

$P_{std}$ = Standard absolute pressure, 760 mm Hg (29.92 in. Hg).

$Q_{std}$ = Dry volumetric stack gas flow rate corrected to standard conditions, dscm/hr (dscf/hr).

R = fraction of spiked compound recovered

s = theoretical concentration (ppm) of spiked target compound

$T_m$ = Average DGM absolute temperature, degrees K (°R).

$T_{std}$ = Standard absolute temperature, 293 degrees K (528 °R).

$V_{af}$ = Volume of front half adsorbent sample, ml.

$V_{ab}$ = Volume of back half adsorbent sample, ml.

$V_i$ = Volume of impinger sample, ml.

$V_m$ = Dry gas volume as measured by the DGM, dry cubic meters (dcm), dry cubic feet (dcf).

$V_{m(std)}$ = Dry gas volume measured by the DGM, corrected to standard conditions, dry standard cubic meters (dscm), dry standard cubic feet (dscf).

12.2 Mass of Methanol. Calculate the total mass of methanol collected in the sampling train using Equation 308–1.

$$M_{tot} = V_i C_i + V_{af} C_{af} + V_{ab} C_{ab} \qquad \text{Equation 308-1}$$

12.3 Dry Sample Gas Volume, Corrected to Standard Conditions. Calculate the volume of gas sampled at standard conditions using Equation 308–2.

$$V_m(std) = \frac{V_m Y T_{std} P_{bar}}{T_m P_{std}} \qquad \text{Equation 308 - 2}$$

12.4 Mass Emission Rate of Methanol. Calculate the mass emission rate of methanol using Equation 308–3.

$$E = \frac{M_{tot}\, Q_{std}}{V_{m\,(std)}} \qquad \text{Equation 308-3}$$

12.5 Recovery Fraction (R)

$$m_v = \frac{m_s}{V_s} - \frac{m_u}{V_u} \qquad \text{Equation 308-4}$$

$$R = \frac{m_v\, v_s}{s} \qquad \text{Equation 308-5}$$

*13.0 Method Performance*

Since a potential sample may contain a variety of compounds from various sources, a specific precision limit for the analysis of field samples is impractical. Precision in the range of 5 to 10 percent relative standard deviation (RSD) is typical for gas chromatographic techniques, but an experienced GC operator with a reliable instrument can readily achieve 5 percent RSD. For this method, the following combined GC/operator values are required.

(a) Precision. Calibration standards must meet the requirements in section 10.2.1 or 10.2.2 as applicable.

(b) Recovery. After developing an appropriate sampling and analytical system for the pollutants of interest, conduct the following spike recovery procedure at each sampling point where the method is being applied.

i. Methanol Spike. Set up two identical sampling trains. Collocate the two sampling probes in the stack. The probes shall be placed in the same horizontal plane, where the first probe tip is 2.5 cm from the outside edge of the other. One of the sampling trains shall be designated the spiked train and the other the unspiked train. Spike methanol into the impinger, and onto the adsorbent tube in the spiked train prior to sampling. The total mass of methanol shall be 40 to 60 percent of the mass expected to be collected with the unspiked train. Sample the stack gas into the two trains simultaneously. Analyze the impingers and adsorbents from the two trains utilizing identical analytical procedures and instrumentation. Determine the fraction of spiked methanol recovered (R) by combining the amount recovered in the impinger and in the adsorbent tube, using the equations in section 12.5. Recovery values must fall in the range: $0.70 \leq R \leq 1.30$. Report the R value in the test report.

ii. [Reserved]

*14.0 Pollution Prevention* [Reserved]

*15.0 Waste Management* [Reserved]

*16.0 Bibliography*

1. Rom, J.J. ''Maintenance, Calibration, and Operation of Isokinetic Source Sampling Equipment.'' Office of Air Programs, Environmental Protection Agency. Research Triangle Park, NC. APTD–0576 March 1972.

2. Annual Book of ASTM Standards. Part 31; Water, Atmospheric Analysis. American Society for Testing and Materials. Philadelphia, PA. 1974. pp. 40–42.

3. Westlin, P.R. and R.T. Shigehara. ''Procedure for Calibrating and Using Dry Gas Volume Meters as Calibration Standards.'' Source Evaluation Society Newsletter. *3* (1) :17–30. February 1978.

4. Yu, K.K. ''Evaluation of Moisture Effect on Dry Gas Meter Calibration.'' Source Evaluation Society Newsletter. *5* (1) :24–28. February 1980.

5. NIOSH Manual of Analytical Methods, Volume 2. U.S. Department of Health and

Human Services National Institute for Occupational Safety and Health. Center for Disease Control. 4676 Columbia Parkway, Cincinnati, OH 45226. (available from the Superintendent of Documents, Government Printing Office, Washington, DC 20402.)

6. Pinkerton, J.E. ''Method for Measuring Methanol in Pulp Mill Vent Gases.'' National Council of the Pulp and Paper Industry for Air and Stream Improvement, Inc., New York, NY.

*17.0 Tables, Diagrams, Flowcharts, and Validation Data* [Reserved]

METHOD 310A—DETERMINATION OF RESIDUAL HEXANE THROUGH GAS CHROMATOGRAPHY

*1.0 Scope and Application*

1.1 This method is used to analyze any crumb rubber or water samples for residual hexane content.

1.2 The sample is heated in a sealed bottle with an internal standard and the vapor is analyzed by gas chromatography.

*2.0 Summary of Method*

2.1 This method, utilizing a capillary column gas chromatograph with a flame ionization detector, determines the concentration of residual hexane in rubber crumb samples.

*3.0 Definitions*

3.1 The definitions are included in the text as needed.

*4.0 Interferences*

4.1 There are no known interferences.

*5.0 Safety*

5.1 It is the responsibility of the user of this procedure to establish safety and health practices applicable to their specific operation.

*6.0 Equipment and Supplies*

6.1 Gas Chromatograph with a flame ionization detector and data handling station equipped with a capillary column 30 meters long.

6.2 Chromatograph conditions for Sigma 1:

6.2.1 Helium pressure: 50# inlet A, 14# aux

6.2.2 Carrier flow: 25 cc/min

6.2.3 Range switch: 100x

6.2.4 DB: 1 capillary column

6.3 Chromatograph conditions for Hewlett-Packard GC:

6.3.1 Initial temperature: 40 °C

6.3.2 Initial time: 8 min

6.3.3 Rate: 0

6.3.4 Range: 2

6.3.5 DB: 1705 capillary column

6.4 Septum bottles and stoppers

6.5 Gas Syringe—0.5 cc

*7.0 Reagents and Standards*

7.1 Chloroform, 99.9 + %, A.S.C. HPLC grade

*8.0 Sample Collection, Preservation, and Storage*

8.1 A representative sample should be caught in a clean 8 oz. container with a secure lid.

8.2 The container should be labeled with sample identification, date and time.

*9.0 Quality Control*

9.1 The instrument is calibrated by injecting calibration solution (Section 10.2 of this method) five times.

9.2 The retention time for components of interest and relative response of monomer to the internal standard is determined.

9.3 Recovery efficiency must be determined once for each sample type and whenever modifications are made to the method.

9.3.1 Determine the percent hexane in three separate dried rubber crumb samples.

9.3.2 Weigh a portion of each crumb sample into separate sample bottles and add a known amount of hexane (10 microliters) by microliter syringe and 20 microliters of internal standard. Analyze each by the described procedure and calculate the percent recovery of the known added hexane.

9.3.3 Repeat the previous step using twice the hexane level (20 microliters), analyze and calculate the percent recovery of the known added hexane.

9.3.4 Set up two additional sets of samples using 10 microliters and 20 microliters of hexane as before, but add an amount of water equal to the dry crumb used. Analyze and calculate percent recovery to show the effect of free water on the results obtained.

9.3.5 A value of R between 0.70 and 1.30 is acceptable.

9.3.6 R shall be used to correct all reported results for each compound by dividing the measured results of each compound by the R for that compound for the same sample type.

*10.0 Calibration and Instrument Settings*

10.1 Calibrate the chromatograph using a standard made by injecting 10 µl of fresh hexane and 20 µl of chloroform into a sealed septum bottle. This standard will be 0.6 wt.% *total* hexane based on 1 gram of dry rubber.

10.2 Analyze the hexane used and calculate the percentage of each hexane isomer (2-methylpentane, 3-methylpentane, n-hexane, and methylcyclo-pentane). Enter these percentages into the method calibration table.

10.3 Heat the standard bottle for 30 minutes in a 105 °C oven.

10.4 Inject about 0.25 cc of vapor into the gas chromatograph and after the analysis is

finished, calibrate according to the procedures described by the instrument manufacturer.

*11.0 Procedure*

11.1 Using a cold mill set at a wide roller gap (125–150 mm), mill about 250 grams of crumb two times to homogenize the sample.

11.2 Weigh about 2 grams of wet crumb into a septum bottle and cap with a septum ring. Add 20 µl of chloroform with a syringe and place in a 105 °C oven for 45 minutes.

11.3 Run the moisture content on a separate portion of the sample and calculate the grams of dry rubber put into the septum bottle.

11.4 Set up the data station on the required method and enter the dry rubber weight in the sample weight field.

11.5 Inject a 0.25 cc vapor sample into the chromatograph and push the start button.

11.6 At the end of the analysis, the data station will print a report listing the concentration of each identified component.

11.7 To analyze water samples, pipet 5 ml of sample into the septum bottle, cap and add 20 µl of chloroform. Place in a 105 °C oven for 30 minutes.

11.8 Enter 5 grams into the sample weight field.

11.9 Inject a 0.25 cc vapor sample into the chromatograph and push the start button.

11.10 At the end of the analysis, the data station will print a report listing the concentration of each identified component.

*12.0 Data Analysis and Calculation*

12.1 For samples that are prepared as in section 11 of this method, ppm n-hexane is read directly from the computer.

12.2 The formulas for calculation of the results are as follows:

$ppm_{hexane} = (A_{hexane} \times R_{hexane})/(A_{is} \times R_{is})$

Where:

$A_{hexane}$ = area of hexane

$R_{hexane}$ = response of hexane

$A_{is}$ = area of the internal standard

$R_{is}$ = response of the internal standard

% hexane in crumb = ($ppm_{hexane}$/sample amount)100

12.3 Correct the results by the value of R (as determined in sections 9.3.4, 9.3.5, and 9.3.6 of this method).

*13.0 Method Performance*

13.1 The test has a standard deviation of 0.14 wt% at 0.66 wt% hexane. Spike recovery of 12 samples at two levels of hexane averaged 102.3%. Note: Recovery must be determined for each type of sample. The values given here are meant to be examples of method performance.

*14.0 Pollution Prevention*

14.1 Waste generation should be minimized where possible. Sample size should be an amount necessary to adequately run the analysis.

*15.0 Waste Management*

15.1 All waste shall be handled in accordance with federal and state environmental regulations.

*16.0 References and Publications*

16.1 DSM Copolymer Test Method T–3380.

## METHOD 310B—DETERMINATION OF RESIDUAL HEXANE THROUGH GAS CHROMATOGRAPHY

*1.0 Scope and Application*

| Analyte | CAS No. | Matrix | Method sensitivity (5.5g sample size) |
|---|---|---|---|
| Hexane | 110–54–3 | Rubber crumb | .01 wt%. |
| Applicable Termonomer | | Rubber crumb | .001 wt%. |

1.1 Data Quality Objectives:

In the production of ethylene-propylene terpolymer crumb rubber, the polymer is recovered from solution by flashing off the solvent with steam and hot water. The resulting water-crumb slurry is then pumped to the finishing units. Certain amounts of solvent (hexane being the most commonly used solvent) and diene monomer remain in the crumb. The analyst uses the following procedure to determine those amounts.

*2.0 Summary of Method*

2.1 The crumb rubber sample is dissolved in toluene to which heptane has been added as an internal standard. Acetone is then added to this solution to precipitate the crumb, and the supernatant is analyzed for hexane and diene by a gas chromatograph equipped with a flame ionization detector (FID).

*3.0 Definitions*

3.1 Included in text as needed.

*4.0 Interferences*

4.1 None known.

4.2 Benzene, introduced as a contaminant in the toluene solvent, elutes between methyl cyclopentane and cyclohexane. However, the benzene peak is completely resolved.

4.3 2,2-dimethyl pentane, a minor component of the hexane used in our process, elutes just prior to methyl cyclopentane. It is included as ''hexane'' in the analysis whether it is integrated separately or included in the methyl cyclopentane peak.

*5.0 Safety*

5.1 This procedure does not purport to address all of the safety concerns associated with its use. It is the responsibility of the user of this procedure to establish appropriate safety and health practices and determine the applicability of regulatory limitations prior to use.

5.2 Chemicals used in this analysis are flammable and hazardous (see specific toxicity information below). Avoid contact with sources of ignition during sample prep. All handling should be done beneath a hood. Playtex or nitrile gloves recommended.

5.3 Hexane is toxic by ingestion and inhalation. Vapor inhalation causes irritation of nasal and respiratory passages, headache, dizziness, nausea, central nervous system depression. Chronic overexposure can cause severe nerve damage. May cause irritation on contact with skin or eyes. May cause damage to kidneys.

5.4 Termonomer may be harmful by inhalation, ingestion, or skin absorption. Vapor or mist is irritating to the eyes, mucous membranes, and upper respiratory tract. Causes skin irritation.

5.5 Toluene is harmful or fatal if swallowed. Vapor harmful if inhaled. Symptoms: headache, dizziness, hallucinations, distorted perceptions, changes in motor activity, nausea, diarrhea, respiratory irritation, central nervous system depression, unconsciousness, liver, kidney and lung damage. Contact can cause severe eye irritation. May cause skin irritation. Causes irritation of eyes, nose, and throat.

5.6 Acetone, at high concentrations or prolonged overexposure, may cause headache, dizziness, irritation of eyes and respiratory tract, loss of strength, and narcosis. Eye contact causes severe irritation; skin contact may cause mild irritation. Concentrations of 20,000 ppm are immediately dangerous to life and health.

5.7 Heptane is harmful if inhaled or swallowed. May be harmful if absorbed through the skin. Vapor or mist is irritating to the eyes, mucous membranes, and upper respiratory tract. Prolonged or repeated exposure to skin causes defatting and dermatitis.

5.8 The steam oven used to dry the polymer in this procedure is set at 110 °C. Wear leather gloves when removing bottles from the oven.

*6.0 Equipment and Supplies*

6.1 4000-ml volumetric flask

6.2 100-ml volumetric pipette

6.3 1000-ml volumetric flask

6.4 8-oz. French Square sample bottles with plastic-lined caps

6.5 Top-loading balance

6.6 Laboratory shaker

6.7 Laboratory oven set at 110 °C (steam oven)

6.8 Gas chromatograph, Hewlett-Packard 5890A, or equivalent, interfaced with HP 7673A (or equivalent) autosampler (equipped with nanoliter adapter and robotic arm), and HP 3396 series II or 3392A (or equivalent) integrator/controller.

6.9 GC column, capillary type, 50m × 0.53mm, methyl silicone, 5 micron film thickness, Quadrex, or equivalent.

6.10 Computerized data acquisition system, such as CIS/CALS

6.11 Crimp-top sample vials and HP p/n 5181–1211 crimp caps, or screw-top autosampler vials and screw tops.

6.12 Glass syringes, 5-ml, with ''Luer-lock'' fitting

6.13 Filters, PTFE, .45 µm pore size, Gelman Acrodisc or equivalent, to fit on Luer-lock syringes (in 6.12, above).

*7.0 Reagents and Standards*

7.1 Reagent toluene, EM Science Omnisolv (or equivalent)

Purity Check: Prior to using any bottle of reagent toluene, analyze it according to section 11.2 of this method. Use the bottle only if hexane, heptane, and termonomer peak areas are less than 15 each (note that an area of 15 is equivalent to less than 0.01 wt% in a 10g sample).

7.2 Reagent acetone, EM Science Omnisolv HR-GC (or equivalent)

*Purity Check:* Prior to using any bottle of reagent acetone, analyze it according to section 11.2 of this method. Use the bottle only if hexane, heptane, and termonomer peak areas are less than 15 each.

7.3 Reagent heptane, Aldrich Chemical Gold Label, Cat #15,487–3 (or equivalent)

*Purity Check:* Prior to using any bottle of reagent heptane, analyze it according to section 11.2 of this method. Use the bottle only if hexane and termonomer peak areas are less than 5 each.

7.4 Internal standard solution—used as a concentrate for preparation of the more dilute Polymer Dissolving Solution. It contains 12.00g heptane/100ml of solution which is 120.0g per liter.

*Preparation of internal standard solution (polymer dissolving stock solution):*

| Action | Notes |
|---|---|
| 7.4.1 Tare a clean, dry 1-liter volumetric flask on the balance. Record the weight to three places. | If the 1-liter volumetric flask is too tall to fit in the balance case, you can shield the flask from drafts by inverting a paint bucket with a hole cut in the bottom over the balance cover. Allow the neck of the flask to project through the hole in the bucket. |
| 7.4.2 Weigh 120.00 g of n-heptane into the flask. Record the total weight of the flask and heptane as well as the weight of heptane added. | Use 99 + % n-heptane from Aldrich or Janssen Chimica. |
| 7.4.3 Fill the flask close to the mark with toluene, about 1 to 2″ below the mark. | Use EM Science Omnisolve toluene, Grade TX0737–1, or equivalent. |
| 7.4.4 Shake the flask vigorously to mix the contents ..... | Allow any bubbles to clear before proceeding to the next step. |
| 7.4.5 Top off the flask to the mark with toluene. Shake vigorously, as in section 7.4.4 of this method, to mix well. | |
| 7.4.6 Weigh the flask containing the solution on the three place balance record the weight | |
| 7.4.7 Transfer the contents of the flask to a 1 qt Boston round bottle. | Discard any excess solution |
| 7.4.8 Label the bottle with the identity of the contents, the weights of heptane and toluene used, the date of preparation and the preparer's name. | Be sure to include the words *"Hexane in Crumb Polymer Dissolving Stock Solution"* on the label. |
| 7.4.9 Refrigerate the completed blend for the use of the routine Technicians. | |

7.5 Polymer Dissolving Solution (''PDS'')—Heptane (as internal standard) in toluene. This solution contains 0.3g of heptane internal standard per 100 ml of solution.

7.5.1 Preparation of Polymer Dissolving Solution. Fill a 4,000-ml volumetric flask about ¾ full with toluene.

7.5.2 Add 100 ml of the internal standard solution (section 7.4 of this method) to the flask using the 100ml pipette.

7.5.3 Fill the flask to the mark with toluene. Discard any excess.

7.5.4 Add a large magnetic stirring bar to the flask and mix by stirring.

7.5.5 Transfer the polymer solvent solution to the one-gallon labeled container with 50ml volumetric dispenser attached.

7.5.6 Purity Check: Analyze according to section 11.2. *NOTE:* You must ''precipitate'' the sample with an equal part of acetone (thus duplicating actual test conditions—see section 11.1 of this method, sample prep) before analyzing. Analyze the reagent 3 times to quantify the $C_6$ and termonomer interferences. Inspect the results to ensure good agreement among the three runs (within 10%).

7.5.7 Tag the bottle with the following information:

POLYMER DISSOLVING SOLUTION FOR $C_6$ IN CRUMB ANALYSIS
PREPARER'S NAME
DATE
CALS FILE ID'S OF THE THREE ANALYSES FOR PURITY (from section 7.5.6 of this method)

7.6 Quality Control Solution: the quality control solution is prepared by adding specific amounts of mixed hexanes (barge hexane), n-nonane and termonomer to some polymer dissolving solution. Nonane elutes in the same approximate time region as termonomer and is used to quantify in that region because it has a longer shelf life. Termonomer, having a high tendency to polymerize, is used in the QC solution only to ensure that both termonomer isomers elute at the proper time.

First, a concentrated stock solution is prepared; the final QC solution can then be prepared by diluting the stock solution.

7.6.1 In preparation of stock solution, fill a 1-liter volumetric flask partially with polymer dissolving solution (PDS)—see section 7.5 of this method. Add 20.0 ml barge hexane, 5.0 ml n-nonane, and 3 ml termonomer. Finish filling the volumetric to the mark with PDS.

7.6.2 In preparation of quality control solution, dilute the quality control stock solution (above) precisely 1:10 with PDS, i.e. 10 ml of stock solution made up to 100 ml (volumetric flask) with PDS. Pour the solution into a 4 oz. Boston round bottle and store in the refrigerator.

### *8.0 Sample Collection, Preservation and Storage*

8.1 Line up facility to catch crumb samples. The facility is a special facility where the sample is drawn.

8.1.1 Ensure that the cock valve beneath facility is closed.

8.1.2 Line up the system from the slurry line cock valve to the cock valve at the nozzle on the stripper.

8.1.3 Allow the system to flush through facility for a period of 30 seconds.

8.2 Catch a slurry crumb sample.

8.2.1 Simultaneously close the cock valves upstream and downstream of facility.

8.2.2 Close the cock valve beneath the slurry line in service.

8.2.3 Line up the cooling tower water through the sample bomb water jacket to the sewer for a minimum of 30 minutes.

8.2.4 Place the sample catching basket beneath facility and open the cock valve underneath the bomb to retrieve the rubber crumb.

8.2.5 If no rubber falls by gravity into the basket, line up nitrogen to the bleeder upstream of the sample bomb and force the rubber into the basket.

8.2.6 Close the cock valve underneath the sample bomb.

8.3 Fill a plastic ''Whirl-pak'' sample bag with slurry crumb and send it to the lab immediately.

8.4 Once the sample reaches the lab, it should be prepped as soon as possible to avoid hexane loss through evaporation. Samples which have lain untouched for more than 30 minutes should be discarded.

*9.0 Quality Control*

Quality control is monitored via a computer program that tracks analyses of a prepared QC sample (from section 7.6.2 of this method). The QC sample result is entered daily into the program, which plots the result as a data point on a statistical chart. If the data point does not satisfy the ''in-control'' criteria (as defined by the lab quality facilitator), an ''out-of-control'' flag appears, mandating corrective action.

In addition, the area of the n-heptane peak is monitored so that any errors in making up the polymer dissolving solution will be caught and corrected. Refer to section 12.4 of this method.

9.1 Fill an autosampler vial with the quality control solution (from section 7.6.2 of this method) and analyze on the GC as normal (per section 11 of this method).

9.2 Add the concentrations of the 5 hexane isomers as they appear on the CALS printout. Also include the 2,2-dimethyl-pentane peak just ahead of the methyl cyclopentane (the fourth major isomer) peak in the event that the peak integration split this peak out. Do not include the benzene peak in the sum. Note the nonane concentration. Record both results (total hexane and nonane) in the QC computer program. If out of control, and GC appears to be functioning within normal parameters, reanalyze a fresh control sample. If the fresh QC is not in control, check stock solution for contaminants or make up a new QC sample with the toluene currently in use. If instrument remains out-of-control, more thorough GC troubleshooting may be needed.

Also, verify that the instrument has detected both isomers of termonomer (quantification not necessary—see section 7.0 of this method).

9.3 Recovery efficiency must be determined for high ethylene concentration, low ethylene concentration, E-P terpolymer, or oil extended samples and whenever modifications are made to the method. Recovery shall be between 70 and 130 percent. All test results must be corrected by the recovery efficiency value (R).

9.3.1 Approximately 10 grams of wet EPDM crumb (equivalent to about 5 grams of dry rubber) shall be added to six sample bottles containing 100 ml of hexane in crumb polymer dissolving solution (toluene containing 0.3 gram n-heptane/100 ml solution). The polymer shall be dissolved by agitating the bottles on a shaker for 4 hours. The polymer shall be precipitated using 100 ml acetone.

9.3.2 The supernatant liquid shall be decanted from the polymer. Care shall be taken to remove as much of the liquid phase from the sample as possible to minimize the effect of retained liquid phase upon the next cycle of the analysis. The supernatant liquid shall be analyzed by gas chromatography using an internal standard quantitation method with heptane as the internal standard.

9.3.3 The precipitated polymer from the steps described above shall be redissolved using toluene as the solvent. No heptane shall be added to the sample in the second dissolving step. The toluene solvent and acetone precipitant shall be determined to be free of interfering compounds.

9.3.4 The rubber which was dissolved in the toluene shall be precipitated with acetone as before, and the supernatant liquid decanted from the precipitated polymer. The liquid shall be analyzed by gas chromatography and the rubber phase dried in a steam-oven to determine the final polymer weight.

9.3.5 The ratios of the areas of the hexane peaks and of the heptane internal standard peak shall be calculated for each of the six samples in the two analysis cycles outlined above. The area ratios of the total hexane to heptane (R1) shall be determined for the two analysis cycles of the sample set. The ratio of the values of R1 from the second analysis cycle to the first cycle shall be determined to give a second ratio (R2).

*10.0 Calibration and Standardization*

The procedure for preparing a Quality Control sample with the internal standard in it is outlined in section 7.6 of this method.

10.1 The relative FID response factors for n-heptane, the internal standard, versus the various hexane isomers and termonomer are relatively constant and should seldom need to be altered. However Baseline construction is a most critical factor in the production of good data. For this reason, close attention should be paid to peak integration. Procedures for handling peak integration will depend upon the data system used.

10.2 If recalibration of the analysis is needed, make up a calibration blend of the

internal standard and the analytes as detailed below and analyze it using the analytical method used for the samples.

10.2.1 Weigh 5 g heptane into a tared scintillation vial to five places.

10.2.2 Add 0.2 ml termonomer to the vial and reweigh.

10.2.3 Add 0.5 ml hexane to the vial and reweigh.

10.2.4 Cap, and shake vigorously to mix.

10.2.5 Calculate the weights of termonomer and of hexane added and divide their weights by the weight of the n-heptane added. The result is the known of given value for the calibration.

10.2.6 Add 0.4 ml of this mixture to a mixture of 100 ml toluene and 100 ml of acetone. Cap and shake vigorously to mix.

10.2.7 Analyze the sample.

10.2.8 Divide the termonomer area and the total areas of the hexane peaks by the n-heptane area. This result is the ''found'' value for the calibration.

10.2.9 Divide the appropriate ''known'' value from 10.2.5 by the found value from 10.2.8. The result is the response factor for the analyte in question. Previous work has shown that the standard deviation of the calibration method is about 1% relative.

*11.0 Procedure*

11.1 SAMPLE PREPARATION

11.1.1 Tare an 8oz sample bottle—Tag attached, cap off; record weight and sample ID on tag in pencil.

11.1.2 Place crumb sample in bottle: RLA–3: 10 g (gives a dry wt. of ~5.5 g).

11.1.3 Dispense 100ml of PDS into each bottle. SAMPLE SHOULD BE PLACED INTO SOLUTION ASAP TO AVOID HEXANE LOSS—Using ''Dispensette'' pipettor. *Before dispensing, ''purge'' the dispensette (25% of its volume) into a waste bottle to eliminate any voids.*

11.1.4 Tightly cap bottles and load samples into shaker.

11.1.5 Insure that ''ON-OFF'' switch on the shaker itself is ''ON.''

11.1.6 Locate shaker timer. Insure that toggle switch atop timer control box is in the middle (''off'') position. If display reads ''04:00'' (4 hours), move toggle switch to the left position. Shaker should begin operating.

11.1.7 After shaker stops, add 100 ml acetone to each sample to precipitate polymer. Shake minimum of 5 minutes on shaker—Vistalon sample may not have fully dissolved; nevertheless, for purposes of consistency, 4 hours is the agreed-upon dissolving time.

11.1.8 Using a 5-ml glass Luer-lock syringe and Acrodisc filter, filter some of the supernatant liquid into an autosampler vial; crimp the vial and load it into the GC autosampler for analysis (section 11.2 of this method)—The samples are filtered to prevent polymer buildup in the GC. Clean the syringes in toluene.

11.1.9 Decant remaining supernatant into a hydrocarbon waste sink, being careful not to discard any of the polymer. Place bottle of precipitate into the steam oven and dry for six hours—Some grades of Vistalon produce very small particles in the precipitate, thus making complete decanting impossible without discarding some polymer. In this case, decant as much as possible and put into the oven as is, allowing the oven to drive off remaining supernatant (this practice is avoided for environmental reasons). WARNING: OVEN IS HOT—110 °C (230 °F).

11.1.10 Cool, weigh and record final weight of bottle.

11.2 GC ANALYSIS

11.2.1 Initiate the CALS computer channel.

11.2.2 Enter the correct instrument method into the GC's integrator.

11.2.3 Load sample vial(s) into autosampler.

11.2.4 Start the integrator.

11.2.5 When analysis is complete, plot CALS run to check baseline skim.

*12.0 Data Analysis and Calculations*

12.1 Add the concentrations of the hexane peaks as they appear on the CALS printout. Do not include the benzene peak in the sum.

12.2 Subtract any hexane interferences found in the PDS (see section 7.5.6 of this method); record the result.

12.3 Note the termonomer concentration on the CALS printout. Subtract any termonomer interference found in the PDS and record this result in a ''% termonomer by GC'' column in a logbook.

12.4 Record the area (from CALS printout) of the heptane internal standard peak in a ''C7 area'' column in the logbook. This helps track instrument performance over the long term.

12.5 After obtaining the final dry weight of polymer used (Section 11.1.10 of this method), record that result in a ''dry wt.'' column of the logbook (for oil extended polymer, the amount of oil extracted is added to the dry rubber weight).

12.6 Divide the %C6 by the dry weight to obtain the total PHR hexane in crumb. Similarly, divide the % termonomer by the dry weight to obtain the total PHR termonomer in crumb. Note that PHR is an abbreviation for ''parts per hundred''. Record both the hexane and termonomer results in the logbook.

12.7 Correct all results by the recovery efficiency value (R).

*13.0 Method Performance*

13.1 The method has been shown to provide 100% recovery of the hexane analyte. The method was found to give a 6% relative

standard deviation when the same six portions of the same sample were carried through the procedure. Note: These values are examples; each sample type, as specified in Section 9.3, must be tested for sample recovery.

*14.0 Pollution Prevention*

14.1 Dispose of all hydrocarbon liquids in the appropriate disposal sink system; never pour hydrocarbons down a water sink.

14.2 As discussed in section 11.1.9 of this method, the analyst can minimize venting hydrocarbon vapor to the atmosphere by decanting as much hydrocarbon liquid as possible before oven drying.

*15.0 Waste Management*

15.1 The Technician conducting the analysis should follow the proper waste management practices for their laboratory location.

*16.0 References*

16.1 Baton Rouge Chemical Plant Analytical Procedure no. BRCP 1302

16.2 Material Safety Data Sheets (from chemical vendors) for hexane, ENB, toluene, acetone, and heptane

METHOD 310C—DETERMINATION OF RESIDUAL N-HEXANE IN EPDM RUBBER THROUGH GAS CHROMATOGRAPHY

*1.0 Scope and Application*

1.1 This method describes a procedure for the determination of residual hexane in EPDM wet crumb rubber in the 0.01—2% range by solvent extraction of the hexane followed by gas chromatographic analysis where the hexane is detected by flame ionization and quantified via an internal standard.

1.2 This method may involve hazardous materials operations and equipment. This method does not purport to address all the safety problems associated with it use, if any. It is the responsibility of the user to consult and establish appropriate safety and health practices and determine the applicability of regulatory limitations prior to use.

*2.0 Summary*

2.1 Residual hexane contained in wet pieces of EPDM polymer is extracted with MIBK. A known amount of an internal standard (IS) is added to the extract which is subsequently analyzed via gas chromatography where the hexane and IS are separated and detected utilizing a megabore column and flame ionization detection (FID). From the response to the hexane and the IS, the amount of hexane in the EPDM polymer is calculated.

*3.0 Definitions*

3.1 Hexane—refers to n-hexane

3.2 Heptane—refers to n-heptane

3.3 MIBK—methyl isobutyl ketone (4 methyl 2—Pentanone)

*4.0 Interferences*

4.1 Material eluting at or near the hexane and/or the IS will cause erroneous results. Prior to extraction, solvent blanks must be analyzed to confirm the absence of interfering peaks.

*5.0 Safety*

5.1 Review Material Safety Data Sheets of the chemicals used in this method.

*6.0 Equipment and Supplies*

6.1 4 oz round glass jar with a wide mouth screw cap lid.

6.2 Vacuum oven.

6.3 50 ml pipettes.

6.4 A gas chromatograph with an auto sampler and a 50 meter, 0.53 ID, methyl silicone column with 5 micron phase thickness.

6.5 Shaker, large enough to hold 10, 4 oz. jars.

6.6 1000 and 4000 ml volumetric flasks.

6.7 Electronic integrator or equivalent data system.

6.8 GC autosampler vials.

6.9 50 uL syringe.

*7.0 Reagents and Standards*

7.1 Reagent grade Methyl-Iso-Butyl-Ketone (MIBK)

7.2 n-heptane, 99% + purity

7.3 n-hexane, 99% + purity

*8.0 Sample Collection*

8.1 Trap a sample of the EPDM crumb slurry in the sampling apparatus. Allow the crumb slurry to circulate through the sampling apparatus for 5 minutes; then close off the values at the bottom and top of the sampling apparatus, trapping the crumb slurry. Run cooling water through the water jacket for a minimum of 30 minutes. Expel the cooled crumb slurry into a sample catching basket. If the crumb does not fall by gravity, force it out with demineralized water or nitrogen. Send the crumb slurry to the lab for analysis.

*9.0 Quality Control*

9.1 The Royalene crumb sample is extracted three times with MIBK containing an internal standard. The hexane from each extraction is added together to obtain a total hexane content. The percent hexane in the first extraction is then calculated and used as the recovery factor for the analysis.

9.2 Follow this test method through section 11.4 of the method. After removing the sample of the first extraction to be run on the gas chromatograph, drain off the remainder of the extraction solvent, retaining the

crumb sample in the sample jar. Rinse the crumb with demineralized water to remove any MIBK left on the surface of the crumb. Repeat the extraction procedure with fresh MIBK with internal standard two more times.

9.3 After the third extraction, proceed to section 11.5 of this method and obtain the percent hexane in each extraction. Use the sample weight obtained in section 12.1 of this method to calculate the percent hexane in each of the extracts.

9.4 Add the percent hexane obtained from the three extractions for a total percent hexane in the sample.

9.5 Use the following equations to determine the recovery factor (R):

% Recovery of the first extraction = (% hexane in the first extract/total % hexane) × 100

Recovery Factor (R) = (% Hexane Recovered in the first extract)/100

*10.0 Calibration*

10.1 Preparation of Internal Standard (IS) solution:

Accuracy weigh 30 grams of n-heptane into a 1000 ml volumetric flask. Dilute to the mark with reagent grade MIBK. Label this Solution ''A''. Pipette 100 mls. of Solution A into a 4 liter volumetric flask. Fill the flask to the mark with reagent MIBK. Label this Solution ''B''. Solution ''B'' will have a concentration of 0.75 mg/ml of heptane.

10.2 Preparation of Hexane Standard Solution (HS):

Using a 50 uL syringe, weigh by difference, 20 mg of n-hexane into a 50 ml volumetric flask containing approximately 40 ml of Solution B. Fill the flask to the mark with Solution B and mix well.

10.3 Conditions for GC analysis of standards and samples:

Temperature:
Initial = 40 °C
Final = 150 °C
Injector = 160 °C
Detector = 280 °C
Program Rate = 5.0 °C/min

Initial Time = 5 minutes Final Time = 6 minutes

Flow Rate = 5.0 ml/min

Sensitivity = detector response must be adjusted to keep the hexane and IS on scale.

10.4 Fill an autosampler vial with the HS, analyze it three times and calculate a Hexane Relative Response Factor (RF) as follows:

$$RF = (A_{IS} \times C_{HS} \times P_{HS})/(A_{HS} \times C_{IS} \times P_{IS}) \quad (1)$$

Where:

$A_{IS}$ = Area of IS peak (Heptane)
$A_{HS}$ = Area of peak (Hexane Standard)
$C_{HS}$ = Mg of Hexane/50 ml HS
$C_{IS}$ = Mg of Heptane/50 ml IS Solution B
$P_{IS}$ = Purity of the IS n-heptane
$P_{HS}$ = Purity of the HS n-hexane

*11.0 Procedure*

11.1 Weight 10 grams of wet crumb into a tared (W1), wide mouth 4 oz. jar.

11.2 Pipette 50 ml of Solution B into the jar with the wet crumb rubber.

11.3 Screw the cap on tightly and place it on a shaker for 4 hours.

11.4 Remove the sample from the shaker and fill an autosampler vial with the MIBK extract.

11.5 Analyze the sample two times.

11.6 Analyze the HS twice, followed by the samples. Inject the HS twice at the end of each 10 samples or at the end of the run.

*12.0 Calculations*

12.1 Drain off the remainder of the MIBK extract from the polymer in the 4 oz. jar. Retain all the polymer in the jar. Place the uncovered jar and polymer in a heated vacuum oven until the polymer is dry. Reweigh the jar and polymer (W2) and calculate the dried sample weight of the polymer as follows:

Dried SW = W2—W1 (2)

12.2 Should the polymer be oil extended, pipette 10 ml of the MIBK extract into a tared evaporating dish (W1) and evaporate to dryness on a steam plate.

Reweigh the evaporating dish containing the extracted oil (W2). Calculate the oil content of the polymer as follows:

Gram of oil extracted = 5 (W2—W1) (3)

$$\% \text{ Hexane in polymer} = (A_s \times RF \times C_{IS} \times P_{IS})/(A_{IS} \times SW) \quad (4)$$

Where:

$A_s$ = Area of sample hexane sample peak.
$A_{IS}$ = Area of IS peak in sample.
$C_{IS}$ = Concentration of IS in 50 ml.
$P_{IS}$ = Purity of IS.
SW = Weight of dried rubber after extraction. (For oil extended polymer, the amount of oil extracted is added to the dry rubber weight).
% Corrected Hexane = (% Hexane in Polymer)/R (5)
R = Recovery factor determined in section 9 of this method.

*13.0 Method Performance*

13.1 Performance must be determined for each sample type by following the procedures in section 9 of this method.

*14.0 Waste Generation*

14.1 Waste generation should be minimized where possible.

*15.0 Waste Management*

15.1 All waste shall be handled in accordance with Federal and State environmental regulations.

*16.0 References* [Reserved]

METHOD 311—ANALYSIS OF HAZARDOUS AIR POLLUTANT COMPOUNDS IN PAINTS AND COATINGS BY DIRECT INJECTION INTO A GAS CHROMATOGRAPH

*1. Scope and Application*

1.1 Applicability. This method is applicable for determination of most compounds designated by the U.S. Environmental Protection Agency as volatile hazardous air pollutants (HAP's) (See Reference 1) that are contained in paints and coatings. Styrene, ethyl acrylate, and methyl methacrylate can be measured by ASTM D 4827–03. Formaldehyde can be measured by ASTM D 5910–05 or ASTM D 1979–91. Toluene diisocyanate can be measured in urethane prepolymers by ASTM D 3432–89. Method 311 applies only to those volatile HAP's which are added to the coating when it is manufactured, not to those that may form as the coating cures (reaction products or cure volatiles). A separate or modified test procedure must be used to measure these reaction products or cure volatiles in order to determine the total volatile HAP emissions from a coating. Cure volatiles are a significant component of the total HAP content of some coatings. The term ''coating'' used in this method shall be understood to mean paints and coatings.

1.2 Principle. The method uses the principle of gas chromatographic separation and quantification using a detector that responds to concentration differences. Because there are many potential analytical systems or sets of operating conditions that may represent useable methods for determining the concentrations of the compounds cited in Section 1.1 in the applicable matrices, all systems that employ this principle, but differ only in details of equipment and operation, may be used as alternative methods, provided that the prescribed quality control, calibration, and method performance requirements are met. Certified product data sheets (CPDS) may also include information relevant to the analysis of the coating sample including, but not limited to, separation column, oven temperature, carrier gas, injection port temperature, extraction solvent, and internal standard.

*2. Summary of Method*

Whole coating is added to dimethylformamide and a suitable internal standard compound is added. An aliquot of the sample mixture is injected onto a chromatographic column containing a stationary phase that separates the analytes from each other and from other volatile compounds contained in the sample. The concentrations of the analytes are determined by comparing the detector responses for the sample to the responses obtained using known concentrations of the analytes.

*3. Definitions* [Reserved]

*4. Interferences*

4.1 Coating samples of unknown composition may contain the compound used as the internal standard. Whether or not this is the case may be determined by following the procedures of Section 11 and deleting the addition of the internal standard specified in Section 11.5.3. If necessary, a different internal standard may be used.

4.2 The GC column and operating conditions developed for one coating formulation may not ensure adequate resolution of target analytes for other coating formulations. Some formulations may contain nontarget analytes that coelute with target analytes. If there is any doubt about the identification or resolution of any gas chromatograph (GC) peak, it may be necessary to analyze the sample using a different GC column or different GC operating conditions.

4.3 Cross-contamination may occur whenever high-level and low-level samples are analyzed sequentially. The order of sample analyses specified in Section 11.7 is designed to minimize this problem.

4.4 Cross-contamination may also occur if the devices used to transfer coating during the sample preparation process or for injecting the sample into the GC are not adequately cleaned between uses. All such devices should be cleaned with acetone or other suitable solvent and checked for plugs or cracks before and after each use.

*5. Safety*

5.1 Many solvents used in coatings are hazardous. Precautions should be taken to avoid unnecessary inhalation and skin or eye contact. This method may involve hazardous materials, operations, and equipment. This test method does not purport to address all of the safety problems associated with its use. It is the responsibility of the user of this test method to establish appropriate safety and health practices and to determine the applicability of regulatory limitations in regards to the performance of this test method.

5.2 Dimethylformamide is harmful if inhaled or absorbed through the skin. The user should obtain relevant health and safety information from the manufacturer. Dimethylformamide should be used only with adequate ventilation. Avoid contact with skin, eyes, and clothing. In case of contact, immediately flush skin or eyes with plenty of water for at least 15 minutes. If eyes are affected, consult a physician. Remove and wash contaminated clothing before reuse.

5.3 User's manuals for the gas chromatograph and other related equipment

should be consulted for specific precautions to be taken related to their use.

*6. Equipment and Supplies*

NOTE: Certified product data sheets (CPDS) may also include information relevant to the analysis of the coating sample including, but not limited to, separation column, oven temperature, carrier gas, injection port temperature, extraction solvent, and internal standard.

6.1 Sample Collection.

6.1.1 Sampling Containers. Dual-seal sampling containers, four to eight fluid ounce capacity, should be used to collect the samples. Glass sample bottles or plastic containers with volatile organic compound (VOC) impermeable walls must be used for corrosive substances (*e.g.*, etch primers and certain coating catalysts such as methyl ethyl ketone (MEK) peroxide). Sample containers, caps, and inner seal liners must be inert to the compounds in the sample and must be selected on a case-by-case basis.

6.1.1.1 Other routine sampling supplies needed include waterproof marking pens, tubing, scrappers/spatulas, clean rags, paper towels, cooler/ice, long handle tongs, and mixing/stirring paddles.

6.1.2 Personal safety equipment needed includes eye protection, respiratory protection, a hard hat, gloves, steel toe shoes, etc.

6.1.3 Shipping supplies needed include shipping boxes, packing material, shipping labels, strapping tape, etc.

6.1.4 Data recording forms and labels needed include coating data sheets and sample can labels.

NOTE: The actual requirements will depend upon the conditions existing at the source sampled.

6.2 Laboratory Equipment and Supplies.

6.2.1 Gas Chromatograph (GC). Any instrument equipped with a flame ionization detector and capable of being temperature programmed may be used. Optionally, other types of detectors (e.g., a mass spectrometer), and any necessary interfaces, may be used provided that the detector system yields an appropriate and reproducible response to the analytes in the injected sample. Autosampler injection may be used, if available.

6.2.2 Recorder. If available, an electronic data station or integrator may be used to record the gas chromatogram and associated data. If a strip chart recorder is used, it must meet the following criteria: A 1 to 10 millivolt (mV) linear response with a full scale response time of 2 seconds or less and a maximum noise level of ±0.03 percent of full scale. Other types of recorders may be used as appropriate to the specific detector installed provided that the recorder has a full scale response time of 2 seconds or less and a maximum noise level of ±0.03 percent of full scale.

6.2.3 Column. The column must be constructed of materials that do not react with components of the sample (*e.g.*, fused silica, stainless steel, glass). The column should be of appropriate physical dimensions (*e.g.*, length, internal diameter) and contain sufficient suitable stationary phase to allow separation of the analytes. DB–5, DB-Wax, and FFAP columns are commonly used for paint analysis; however, it is the responsibility of each analyst to select appropriate columns and stationary phases.

6.2.4 Tube and Tube Fittings. Supplies to connect the GC and gas cylinders.

6.2.5 Pressure Regulators. Devices used to regulate the pressure between gas cylinders and the GC.

6.2.6 Flow Meter. A device used to determine the carrier gas flow rate through the GC. Either a digital flow meter or a soap film bubble meter may be used to measure gas flow rates.

6.2.7 Septa. Seals on the GC injection port through which liquid or gas samples can be injected using a syringe.

6.2.8 Liquid Charging Devices. Devices used to inject samples into the GC such as clean and graduated 1, 5, and 10 microliter (µl) capacity syringes.

6.2.9 Vials. Containers that can be sealed with a septum in which samples may be prepared or stored. The recommended size is 25 ml capacity. Mininert® valves have been found satisfactory and are available from Pierce Chemical Company, Rockford, Illinois.

6.2.10 Balance. Device used to determine the weights of standards and samples. An analytical balance capable of accurately weighing to 0.0001 g is required.

*7. Reagents and Standards*

7.1 Purity of Reagents. Reagent grade chemicals shall be used in all tests. Unless otherwise specified, all reagents shall conform to the specifications of the Committee on Analytical Reagents of the American Chemical Society, where such specifications are available. Other grades may be used provided it is first ascertained that the reagent is of sufficient purity to permit its use without lessening the accuracy of determination.

7.2 Carrier Gas. Helium carrier gas shall have a purity of 99.995 percent or higher. High purity nitrogen may also be used. Other carrier gases that are appropriate for the column system and analyte may also be used. Ultra-high purity grade hydrogen gas and zero-grade air shall be used for the flame ionization detector.

7.3 Dimethylformamide (DMF). Solvent for all standards and samples. Some other suitable solvent may be used if DMF is not compatible with the sample or coelutes with a target analyte.

NOTE: DMF may coelute with ethylbenzene or p-xylene under the conditions described in the note under Section 6.2.3.

7.4 Internal Standard Materials. The internal standard material is used in the quantitation of the analytes for this method. It shall be gas chromatography spectrophotometric quality or, if this grade is not available, the highest quality available. Obtain the assay for the internal standard material and maintain at that purity during use. The recommended internal standard material is 1-propanol; however, selection of an appropriate internal standard material for the particular coating and GC conditions used is the responsibility of each analyst.

7.5 Reference Standard Materials. The reference standard materials are the chemicals cited in Section 1.1 which are of known identity and purity and which are used to assist in the identification and quantification of the analytes of this method. They shall be the highest quality available. Obtain the assays for the reference standard materials and maintain at those purities during use.

7.6 Stock Reference Standards. Stock reference standards are dilutions of the reference standard materials that may be used on a daily basis to prepare calibration standards, calibration check standards, and quality control check standards. Stock reference standards may be prepared from the reference standard materials or purchased as certified solutions.

7.6.1 Stock reference standards should be prepared in dimethylformamide for each analyte expected in the coating samples to be analyzed. The concentrations of analytes in the stock reference standards are not specified but must be adequate to prepare the calibration standards required in the method. A stock reference standard may contain more than one analyte provided all analytes are chemically compatible and no analytes coelute. The actual concentrations prepared must be known to within 0.1 percent (e.g., 0.1000 ±0.0001 g/g solution). The following procedure is suggested. Place about 35 ml of dimethylformamide into a tared ground-glass stoppered 50 ml volumetric flask. Weigh the flask to the nearest 0.1 mg. Add 12.5 g of the reference standard material and reweigh the flask. Dilute to volume with dimethylformamide and reweigh. Stopper the flask and mix the contents by inverting the flask several times. Calculate the concentration in grams per gram of solution from the net gain in weights, correcting for the assayed purity of the reference standard material.

NOTE: Although a glass-stoppered volumetric flask is convenient, any suitable glass container may be used because stock reference standards are prepared by weight.

7.6.2 Transfer the stock reference standard solution into one or more Teflon-sealed screw-cap bottles. Store, with minimal headspace, at −10 °C to 0 °C and protect from light.

7.6.3 Prepare fresh stock reference standards every six months, or sooner if analysis results from daily calibration check standards indicate a problem. Fresh stock reference standards for very volatile HAP's may have to be prepared more frequently.

7.7 Calibration Standards. Calibration standards are used to determine the response of the detector to known amounts of reference material. Calibration standards must be prepared at a minimum of three concentration levels from the stock reference standards (see Section 7.6). Prepare the calibration standards in dimethylformamide (see Section 7.3). The lowest concentration standard should contain a concentration of analyte equivalent either to a concentration of no more than 0.01% of the analyte in a coating or to a concentration that is lower than the actual concentration of the analyte in the coating, whichever concentration is higher. The highest concentration standard should contain a concentration of analyte equivalent to slightly more than the highest concentration expected for the analyte in a coating. The remaining calibration standard should contain a concentration of analyte roughly at the midpoint of the range defined by the lowest and highest concentration calibration standards. The concentration range of the standards should thus correspond to the expected range of analyte concentrations in the prepared coating samples (see Section 11.5). Each calibration standard should contain each analyte for detection by this method expected in the actual coating samples (e.g., some or all of the compounds listed in Section 1.1 may be included). Each calibration standard should also contain an appropriate amount of internal standard material (response for the internal standard material is within 25 to 75 percent of full scale on the attenuation setting for the particular reference standard concentration level). Calibration Standards should be stored for 1 week only in sealed vials with minimal headspace. If the stock reference standards were prepared as specified in Section 7.6, the calibration standards may be prepared by either weighing each addition of the stock reference standard or by adding known volumes of the stock reference standard and calculating the mass of the standard reference material added. Alternative 1 (Section 7.7.1) specifies the procedure to be followed when the stock reference standard is added by volume. Alternative 2 (Section 7.7.2) specifies the procedure to be followed when the stock reference standard is added by weight.

NOTE: To assist with determining the appropriate amount of internal standard to

add, as required here and in other sections of this method, the analyst may find it advantageous to prepare a curve showing the area response versus the amount of internal standard injected into the GC.

7.7.1 Preparation Alternative 1. Determine the amount of each stock reference standard and dimethylformamide solvent needed to prepare approximately 25 ml of the specific calibration concentration level desired. To a tared 25 ml vial that can be sealed with a crimp-on or Mininert® valve, add the total amount of dimethylformamide calculated to be needed. As quickly as practical, add the calculated amount of each stock reference standard using new pipets (or pipet tips) for each stock reference standard. Reweigh the vial and seal it. Using the known weights of the standard reference materials per ml in the stock reference standards, the volumes added, and the total weight of all reagents added to the vial, calculate the weight percent of each standard reference material in the calibration standard prepared. Repeat this process for each calibration standard to be prepared.

7.7.2 Preparation Alternative 2. Determine the amount of each stock reference standard and dimethylformamide solvent needed to prepare approximately 25 ml of the specific calibration concentration level desired. To a tared 25 ml vial that can be sealed with a crimp-on or Mininert® valve, add the total amount of dimethylformamide calculated to be needed. As quickly as practical, add the calculated amount of a stock reference standard using a new pipet (or pipet tip) and reweigh the vial. Repeat this process for each stock reference standard to be added. Seal the vial after obtaining the final weight. Using the known weight percents of the standard reference materials in the stock reference standards, the weights of the stock reference standards added, and the total weight of all reagents added to the vial, calculate the weight percent of each standard reference material in the calibration standard prepared. Repeat this process for each calibration standard to be prepared.

*8. Sample Collection, Preservation, Transport, and Storage*

8.1 Copies of material safety data sheets (MSDS's) for each sample should be obtained prior to sampling. The MSDS's contain information on the ingredients, and physical and chemical properties data. The MSDS's also contain recommendations for proper handling or required safety precautions. Certified product data sheets (CPDS) may also include information relevant to the analysis of the coating sample including, but not limited to, separation column, oven temperature, carrier gas, injection port temperature, extraction solvent, and internal standard.

8.2 A copy of the blender's worksheet can be requested to obtain data on the exact coating being sampled. A blank coating data sheet form (see Section 18) may also be used. The manufacturer's formulation information from the product data sheet should also be obtained.

8.3 Prior to sample collection, thoroughly mix the coating to ensure that a representative, homogeneous sample is obtained. It is preferred that this be accomplished using a coating can shaker or similar device; however, when necessary, this may be accomplished using mechanical agitation or circulation systems.

8.3.1 Water-thinned coatings tend to incorporate or entrain air bubbles if stirred too vigorously; mix these types of coatings slowly and only as long as necessary to homogenize.

8.3.2 Each component of multicomponent coatings that harden when mixed must be sampled separately. The component mix ratios must be obtained at the facility at the time of sampling and submitted to the analytical laboratory.

8.4 Sample Collection. Samples must be collected in a manner that prevents or minimizes loss of volatile components and that does not contaminate the coating reservoir. A suggested procedure is as follows. Select a sample collection container which has a capacity at least 25 percent greater than the container in which the sample is to be transported. Make sure both sample containers are clean and dry. Using clean, long-handled tongs, turn the sample collection container upside down and lower it into the coating reservoir. The mouth of the sample collection container should be at approximately the midpoint of the reservoir (do not take the sample from the top surface). Turn the sample collection container over and slowly bring it to the top of the coating reservoir. Rapidly pour the collected coating into the sample container, filling it completely. It is important to fill the sample container completely to avoid any loss of volatiles due to volatilization into the headspace. Return any unused coating to the reservoir or dispose as appropriate.

NOTE: If a company requests a set of samples for its own analysis, a separate set of samples, using new sample containers, should be taken at the same time.

8.5 Once the sample is collected, place the sample container on a firm surface and insert the inner seal in the container by placing the seal inside the rim of the container, inverting a screw cap, and pressing down on the screw cap which will evenly force the inner seal into the container for a tight fit. Using clean towels or rags, remove all residual coating material from the outside of the sample container after inserting the inner seal. Screw the cap onto the container.

8.5.1 Affix a sample label (see Section 18) clearly identifying the sample, date collected, and person collecting the sample.

8.5.2 Prepare the sample for transportation to the laboratory. The sample should be maintained at the coating's recommended storage temperature specified on the Material Safety Data Sheet, or, if no temperature is specified, the sample should be maintained within the range of 5 °C to 38 °C.

8.9 The shipping container should adhere to U.S. Department of Transportation specification DOT 12–B. Coating samples are considered hazardous materials; appropriate shipping procedures should be followed.

*9. Quality Control*

9.1 Laboratories using this method should operate a formal quality control program. The minimum requirements of the program should consist of an initial demonstration of laboratory capability and an ongoing analysis of blanks and quality control samples to evaluate and document quality data. The laboratory must maintain records to document the quality of the data generated. When results indicate atypical method performance, a quality control check standard (see Section 9.4) must be analyzed to confirm that the measurements were performed in an in-control mode of operation.

9.2 Before processing any samples, the analyst must demonstrate, through analysis of a reagent blank, that there are no interferences from the analytical system, glassware, and reagents that would bias the sample analysis results. Each time a set of analytical samples is processed or there is a change in reagents, a reagent blank should be processed as a safeguard against chronic laboratory contamination. The blank samples should be carried through all stages of the sample preparation and measurement steps.

9.3 Required instrument quality control parameters are found in the following sections:

9.3.1 Baseline stability must be demonstrated to be ≤5 percent of full scale using the procedures given in Section 10.1.

9.3.2 The GC calibration is not valid unless the retention time (RT) for each analyte at each concentration is within ±0.05 min of the retention time measured for that analyte in the stock standard.

9.3.3 The retention time (RT) of any sample analyte must be within ±0.05 min of the average RT of the analyte in the calibration standards for the analyte to be considered tentatively identified.

9.3.4 The GC system must be calibrated as specified in Section 10.2.

9.3.5 A one-point daily calibration check must be performed as specified in Section 10.3.

9.4 To establish the ability to generate results having acceptable accuracy and precision, the analyst must perform the following operations.

9.4.1 Prepare a quality control check standard (QCCS) containing each analyte expected in the coating samples at a concentration expected to result in a response between 25 percent and 75 percent of the limits of the calibration curve when the sample is prepared as described in Section 11.5. The QCCS may be prepared from reference standard materials or purchased as certified solutions. If prepared in the laboratory, the QCCS must be prepared independently from the calibration standards.

9.4.2 Analyze three aliquots of the QCCS according to the method beginning in Section 11.5.3 and calculate the weight percent of each analyte using Equation 1, Section 12.

9.4.3 Calculate the mean weight percent ($\bar{X}$) for each analyte from the three results obtained in Section 9.4.2.

9.4.4 Calculate the percent accuracy for each analyte using the known concentrations (Ti) in the QCCS using Equation 3, Section 12.

9.4.5 Calculate the percent relative standard deviation (percent RSD) for each analyte using Equation 7, Section 12, substituting the appropriate values for the relative response factors (RRF's) in said equation.

9.4.6 If the percent accuracy (Section 9.4.4) for all analytes is within the range 90 percent to 110 percent and the percent RSD (Section 9.4.5) for all analytes is ≤20 percent, system performance is acceptable and sample analysis may begin. If these criteria are not met for any analyte, then system performance is not acceptable for that analyte and the test must be repeated for those analytes only. Repeated failures indicate a general problem with the measurement system that must be located and corrected. In this case, the entire test, beginning at Section 9.4.1, must be repeated after the problem is corrected.

9.5 Great care must be exercised to maintain the integrity of all standards. It is recommended that all standards be stored at −10 °C to 0 °C in screw-cap amber glass bottles with Teflon liners.

9.6 Unless otherwise specified, all weights are to be recorded within 0.1 mg.

*10. Calibration and Standardization.*

10.1 Column Baseline Drift. Before each calibration and series of determinations and before the daily calibration check, condition the column using procedures developed by the laboratory or as specified by the column supplier. Operate the GC at initial (i.e., before sample injection) conditions on the lowest attenuation to be used during sample analysis. Adjust the recorder pen to zero on the chart and obtain a baseline for at least one minute. Initiate the GC operating cycle that would be used for sample analysis. On the recorder chart, mark the pen position at

the end of the simulated sample analysis cycle. Baseline drift is defined as the absolute difference in the pen positions at the beginning and end of the cycle in the direction perpendicular to the chart movement. Calculate the percent baseline drift by dividing the baseline drift by the chart width representing full-scale deflection and multiply the result by 100.

10.2 Calibration of GC. Bring all stock standards and calibration standards to room temperature while establishing the GC at the determined operating conditions.

10.2.1 Retention Times (RT's) for Individual Compounds.

NOTE: The procedures of this subsection are required only for the initial calibration. However, it is good laboratory practice to follow these procedures for some or all analytes before each calibration. The procedures were written for chromatograms output to a strip chart recorder. More modern instruments (e.g., integrators and electronic data stations) determine and print out or display retention times automatically.

The RT for each analyte should be determined before calibration. This provides a positive identification for each peak observed from the calibration standards. Inject an appropriate volume (see note in Section 11.5.2) of one of the stock reference standards into the gas chromatograph and record on the chart the pen position at the time of the injection (see Section 7.6.1). Dilute an aliquot of the stock reference standard as required in dimethylformamide to achieve a concentration that will result in an on-scale response. Operate the gas chromatograph according to the determined procedures. Select the peak(s) that correspond to the analyte(s) [and internal standard, if used] and measure the retention time(s). If a chart recorder is used, measure the distance(s) on the chart from the injection point to the peak maxima. These distances, divided by the chart speed, are defined as the RT's of the analytes in question. Repeat this process for each of the stock reference standard solutions.

NOTE: If gas chromatography with mass spectrometer detection (GC-MS) is used, a stock reference standard may contain a group of analytes, provided all analytes are adequately separated during the analysis. Mass spectral library matching can be used to identify the analyte associated with each peak in the gas chromatogram. The retention time for the analyte then becomes the retention time of its peak in the chromatogram.

10.2.2 Calibration. The GC must be calibrated using a minimum of three concentration levels of each potential analyte. (See Section 7.7 for instructions on preparation of the calibration standards.) Beginning with the lowest concentration level calibration standard, carry out the analysis procedure as described beginning in Section 11.7. Repeat the procedure for each progressively higher concentration level until all calibration standards have been analyzed.

10.2.2.1 Calculate the RT's for the internal standard and for each analyte in the calibration standards at each concentration level as described in Section 10.2.1. The RT's for the internal standard must not vary by more than 0.10 minutes. Identify each analyte by comparison of the RT's for peak maxima to the RT's determined in Section 10.2.1.

10.2.2.2 Compare the retention times (RT's) for each potential analyte in the calibration standards for each concentration level to the retention times determined in Section 10.2.1. The calibration is not valid unless all RT's for all analytes meet the criteria given in Section 9.3.2.

10.2.2.3 Tabulate the area responses and the concentrations for the internal standard and each analyte in the calibration standards. Calculate the response factor for the internal standard ($RF_{is}$) and the response factor for each compound relative to the internal standard (RRF) for each concentration level using Equations 5 and 6, Section 12.

10.2.2.4 Using the RRF's from the calibration, calculate the percent relative standard deviation (percent RSD) for each analyte in the calibration standard using Equation 7, Section 12. The percent RSD for each individual calibration analyte must be *less* than 15 percent. This criterion must be met in order for the calibration to be valid. If the criterion is met, the mean RRF's determined above are to be used until the next calibration.

10.3 Daily Calibration Checks. The calibration curve (Section 10.2.2) must be checked and verified at least once each day that samples are analyzed. This is accomplished by analyzing a calibration standard that is at a concentration near the midpoint of the working range and performing the checks in Sections 10.3.1, 10.3.2, and 10.3.3.

10.3.1 For each analyte in the calibration standard, calculate the percent difference in the RRF from the last calibration using Equation 8, Section 12. If the percent difference for each calibration analyte is less than 10 percent, the last calibration curve is assumed to be valid. If the percent difference for any analyte is greater than 5 percent, the analyst should consider this a warning limit. If the percent difference for any one calibration analyte exceeds 10 percent, corrective action must be taken. If no source of the problem can be determined after corrective action has been taken, a new three-point (minimum) calibration must be generated. This criterion must be met before quantitative analysis begins.

10.3.2 If the $RF_{is}$ for the internal standard changes by more than ±20 percent from the last daily calibration check, the system

must be inspected for malfunctions and corrections made as appropriate.

10.3.3 The retention times for the internal standard and all calibration check analytes must be evaluated. If the retention time for the internal standard or for any calibration check analyte changes by more than 0.10 min from the last calibration, the system must be inspected for malfunctions and corrections made as required.

*11. Procedure*

11.1 All samples and standards must be allowed to warm to room temperature before analysis. Observe the given order of ingredient addition to minimize loss of volatiles.

11.2 Bring the GC system to the determined operating conditions and condition the column as described in Section 10.1.

NOTE: The temperature of the injection port may be an especially critical parameter. Information about the proper temperature may be found on the CPDS.

11.3 Perform the daily calibration checks as described in Section 10.3. Samples are not to be analyzed until the criteria in Section 10.3 are met.

11.4 Place the as-received coating sample on a paint shaker, or similar device, and shake the sample for a minimum of 5 minutes to achieve homogenization.

11.5 NOTE: The steps in this section must be performed rapidly and without interruption to avoid loss of volatile organics. These steps must be performed in a laboratory hood free from solvent vapors. All weights must be recorded to the nearest 0.1 mg.

11.5.1 Add 16 g of dimethylformamide to each of two tared vials (A and B) capable of being septum sealed.

11.5.2 To each vial add a weight of coating that will result in the response for the major constituent being in the upper half of the linear range of the calibration curve.

NOTE: The magnitude of the response obviously depends on the amount of sample injected into the GC as specified in Section 11.8. This volume must be the same as used for preparation of the calibration curve, otherwise shifts in compound retention times may occur. If a sample is prepared that results in a response outside the limits of the calibration curve, new samples must be prepared; changing the volume injected to bring the response within the calibration curve limits is not permitted.

11.5.3 Add a weight of internal standard to each vial (A and B) that will result in the response for the internal standard being between 25 percent and 75 percent of the linear range of the calibration curve.

11.5.4 Seal the vials with crimp-on or Mininert® septum seals.

11.6 Shake the vials containing the prepared coating samples for 60 seconds. Allow the vials to stand undisturbed for ten minutes. If solids have not settled out on the bottom after 10 minutes, then centrifuge at 1,000 rpm for 5 minutes. The analyst also has the option of injecting the sample without allowing the solids to settle.

11.7 Analyses should be conducted in the following order: daily calibration check sample, method blank, up to 10 injections from sample vials (*i.e.*, one injection each from up to five pairs of vials, which corresponds to analysis of 5 coating samples).

11.8 Inject the prescribed volume of supernatant from the calibration check sample, the method blank, and the sample vials onto the chromatographic column and record the chromatograms while operating the system under the specified operating conditions.

NOTE: The analyst has the option of injecting the unseparated sample.

*12. Data Analysis and Calculations*

12.1 Qualitative Analysis. An analyte (e.g., those cited in Section 1.1) is considered tentatively identified if two criteria are satisfied: (1) elution of the sample analyte within ±0.05 min of the average GC retention time of the same analyte in the calibration standard; and (2) either (a) confirmation of the identity of the compound by spectral matching on a gas chromatograph equipped with a mass selective detector or (b) elution of the sample analyte within ±0.05 min of the average GC retention time of the same analyte in the calibration standard analyzed on a dissimilar GC column.

12.1.1 The RT of the sample analyte must meet the criteria specified in Section 9.3.3.

12.1.2 When doubt exists as to the identification of a peak or the resolution of two or more components possibly comprising one peak, additional confirmatory techniques (listed in Section 12.1) must be used.

12.2 Quantitative Analysis. When an analyte has been identified, the quantification of that compound will be based on the internal standard technique.

12.2.1 A single analysis consists of one injection from each of two sample vials (A and B) prepared using the same coating. Calculate the concentration of each identified analyte in the sample as follows:

$$HAP_{wt\%} = 100 \times \frac{(A_x)(W_{is})}{(A_{is})(\overline{RRF_x})(W_x)} \qquad \text{Eq. (1)}$$

where:

$HAP_{wt\%}$ = weight percent of the analyte in coating.
$A_x$ = Area response of the analyte in the sample.
$W_{is}$ = Weight of internal standard added to sample, g.
$A_{is}$ = Area response of the internal standard in the sample.
$\overline{RRF_x}$ = Mean relative response factor for the analyte in the calibration standards.
$W_x$ = Weight of coating added to the sample solution, g.

12.2.2 Report results for duplicate analysis (sample vials A and B) without correction.

12.3 Precision Data. Calculate the percent difference between the measured concentrations of each analyte in vials A and B as follows.

12.3.1 Calculate the weight percent of the analyte in each of the two sample vials as described in Section 12.2.1.

12.3.2 Calculate the percent difference for each analyte as:

$$\%Dif_i = 100 \times \frac{|A_i - B_i|}{\frac{(A_i + B_i)}{2}} \qquad \text{Eq. (2)}$$

where $A_i$ and $B_i$ are the measured concentrations of the analyte in vials A and B.

12.4 Calculate the percent accuracy for analytes in the QCCS (See Section 9.4) as follows:

$$\%\ Accuracy_x = 100 \times \frac{\overline{X}_x}{T_x} \qquad \text{Eq. (3)}$$

where $X_x$ is the mean measured value and $T_x$ is the known true value of the analyte in the QCCS.

12.5 Obtain retention times (RT's) from data station or integrator or, for chromatograms from a chart recorder, calculate the RT's for analytes in the calibration standards (See Section 10.2.2.2) as follows:

$$RT = \frac{\text{Distance from injection to peak maximum}}{\text{Recorder chart speed}} \qquad \text{Eq. (4)}$$

12.6 Calculate the response factor for the internal standard (See Section 10.2.2.3) as follows:

$$RF_{is} = \frac{A_{is}}{C_{is}} \qquad \text{Eq. (5)}$$

where:

$A_{is}$ = Area response of the internal standard.

$C_{is}$ = Weight percent of the internal standard.

12.7 Calculate the relative response factors for analytes in the calibration standards (See Section 10.2.2.3) as follows:

where:

$$RRF_x = \frac{A_x}{RF_{is}\ C_x} \qquad \text{Eq. (6)}$$

$RRF_x$ = Relative response factor for an individual analyte.

$A_x$ = Area response of the analyte being measured.

$C_x$ = Weight percent of the analyte being measured.

12.8 Calculate the percent relative standard deviation of the relative response factors for analytes in the calibration standards (See Section 10.2.2.4) as follows:

$$\%RSD = 100 \times \frac{\sqrt{\frac{\sum_{i=1}^{n}\left(RRF_x - \overline{RRF_x}\right)^2}{n-1}}}{\overline{RRF_x}} \qquad \text{Eq. (7)}$$

where:

n = Number of calibration concentration levels used for an analyte.
$RRF_x$ = Individual RRF for an analyte.
$\overline{RRF_x}$ = Mean of all RRF′s for an analyte.

12.9 Calculate the percent difference in the relative response factors between the calibration curve and the daily calibration checks (See Section 10.3) as follows:

$$\%\ \text{Difference} = \frac{\left|\overline{RRF_x} - RRF_c\right|}{\overline{RRF_x}} \times 100 \qquad \text{Eq. (8)}$$

where:

$\overline{RRF}$ = mean relative response factor from last calibration.
RRF = relative response factor from calibration check standard.

*13. Measurement of Reaction Byproducts That are HAP* [Reserved]

*14. Method Performance* [Reserved]

*15. Pollution Prevention* [Reserved]

*16. Waste Management*

16.1 The coating samples and laboratory standards and reagents may contain compounds which require management as hazardous waste. It is the laboratory's responsibility to ensure all wastes are managed in accordance with all applicable laws and regulations.

16.2 To avoid excessive laboratory waste, obtain only enough sample for laboratory analysis.

16.3 It is recommended that discarded waste coating solids, used rags, used paper towels, and other nonglass or nonsharp waste materials be placed in a plastic bag before disposal. A separate container, designated ''For Sharp Objects Only,'' is recommended for collection of discarded glassware and other sharp-edge items used in the laboratory. It is recommended that unused or excess samples and reagents be placed in a solvent-resistant plastic or metal container with a lid or cover designed for flammable liquids. This container should not be stored in the area where analytical work is performed. It is recommended that a record be kept of all compounds placed in the container for identification of the contents upon disposal.

*17. References*

1. Clean Air Act Amendments, Public Law 101–549, Titles I–XI, November, 1990.
2. Standard Test Method for Water Content of Water-Reducible Paints by Direct Injection into a Gas Chromatograph. ASTM Designation D3792–79.
3. Standard Practice for Sampling Liquid Paints and Related Pigment Coatings. ASTM Designation D3925–81.
4. Standard Test Method for Determination of Dichloromethane and 1,1,1-Trichloroethane in Paints and Coatings by Direct Injection into a Gas Chromatograph. ASTM Designation D4457–02.

5. Standard Test Method for Determining the Unreacted Monomer Content of Latexes Using Capillary Column Gas Chromatography. ASTM Designation D4827–03.

6. Standard Test Method for Determining Unreacted Monomer Content of Latexes Using Gas-Liquid Chromatography, ASTM Designation D4747–02.

7. Method 301—''Field Validation of Pollutant Measurement Methods from Various Waste Media,'' 40 CFR 63, Appendix A.

8. ''Reagent Chemicals, American Chemical Society Specifications,'' American Chemical Society, Washington, DC. For suggestions on the testing of reagents not listed by the American Chemical Society, see ''Reagent Chemicals and Standards'' by Joseph Rosin, D. Van Nostrand Co., Inc., New York, NY and the ''United States Pharmacopeia.''

*18. Tables, Diagrams, Flowcharts, and Validation Data*

Agency: _____
Inspector: _____
Date/Time: _____
Sample ID#: _____
Source ID: _____
Coating Name/Type: _____
Plant Witness: _____
Type Analysis Required: _____
Special Handling: _____

Sample Container Label

Coating Data

Date: _____
Source: _____

| Data | Sample ID No. | Sample ID No. |
|---|---|---|
| Coating: | | |
| Supplier Name | | |
| Name and Color of Coating | | |
| Type of Coating (primer, clearcoat, etc.) | | |
| Identification Number for Coating | | |
| Coating Density (lbs/gal) | | |
| Total Volatiles Content (wt percent) | | |
| Water Content (wt percent) | | |
| Exempt Solvents Content (wt percent) | | |
| VOC Content (wt percent) | | |
| Solids Content (vol percent) | | |
| Diluent Properties: | | |
| Name. | | |
| Identification Number | | |
| Diluent Solvent Density (lbs/gal) | | |
| VOC Content (wt percent) | | |
| Water Content (wt percent) | | |
| Exempt Solvent Content (wt percent) | | |
| Diluent/Solvent Ratio (gal diluent solvent/gal coating) | | |

Stock Reference Standard

Name of Reference Material: _____
Supplier Name: _____
Lot Number: _____
Purity: _____
Name of Solvent Material: *Dimethylformamide* _____
Supplier Name: _____
Lot Number: _____
Purity: _____
Date Prepared: _____
Prepared By: _____
Notebook/page no.: _____

PREPARATION INFORMATION

1. Weight Empty Flask ..... _____,g
2. Weight Plus DMF ..... _____,g
3. Weight Plus Reference Material. _____,g
4. Weight After Made to Volume. _____,g

PREPARATION INFORMATION—Continued

5. Weight DMF (lines 2–1 + 3–4). _____,g
6. Weight Ref. Material (lines 3–2). _____,g
7. Corrected Weight of Reference Material (line 6 times purity). _____,g
8. Fraction Reference Material in Standard (Line 7 ÷ Line 5) soln. _____,g/g
9. Total Volume of Standard Solution. _____, ml
10. Weight Reference Material per ml of Solution (Line 7 ÷ Line 9). _____,g/ml

Laboratory ID No. for this Standard. _____
Expiration Date for this Standard. _____

CALIBRATION STANDARD

Date Prepared: _____

Date Expires: _____

Prepared By: _____

Notebook/page: _____

Calibration Standard Identification No.: _____

PREPARATION INFORMATION

Final Weight Flask Plus Reagents. _____, g

Weight Empty Flask ..... _____, g

Total Weight Of Reagents ..... _____, g

| Analyte name [a] | Stock reference standard ID No. | Amount of stock reference standard added (by volume or by weight) | | | | Calculated weight analyte added, g | Weight percent analyte in calibration standard [b] |
|---|---|---|---|---|---|---|---|
| | | Volume added, ml | Amount in standard, g/ml | Weight added, g | Amount in standard, g/g soln | | |
| . | | | | | | | |
| . | | | | | | | |
| . | | | | | | | |
| . | | | | | | | |
| . | | | | | | | |
| . | | | | | | | |
| . | | | | | | | |
| . | | | | | | | |
| . | | | | | | | |
| . | | | | | | | |

[a] Include internal standard(s).
[b] Weight percent = weight analyte added ÷ total weight of reagents.

Quality Control Check Standard _____

Date Prepared: _____

Date Expires: _____

Prepared By: _____

Notebook/page: _____

Quality Control Check Standard Identification No.:

PREPARATION INFORMATION

Final Weight Flask Plus Reagents. _____,g

Weight Empty Flask ..... _____,g

Total Weight Of Reagents ..... _____,g

| Analyte name [a] | Stock reference standard ID No. | Amount of stock reference standard added (by volume or by weight) | | | | Calculated weight analyte added, g | Weight percent analyte in QCC standard [b] |
|---|---|---|---|---|---|---|---|
| | | Volume added, ml | Amount in standard, g/ml | Weight added, g | Amount in standard, g/g soln | | |
| . | | | | | | | |
| . | | | | | | | |
| . | | | | | | | |
| . | | | | | | | |
| . | | | | | | | |
| . | | | | | | | |
| . | | | | | | | |
| . | | | | | | | |
| . | | | | | | | |
| . | | | | | | | |

[a] Include internal Standard(s).
[b] Weight percent = weight analyte added ÷ total weight of reagents.

Quality Control Check Standard Analysis

Date OCCS Analyzed: _____

OCCS Identification No. _____

Analyst: _____

QCC Expiration Date: _____

ANALYSIS RESULTS

| Analyte | Weight percent determined | | | Mean Wt percent | Percent accuracx | Percent RSD | Meets criteria in Section 9.4.6 | |
|---|---|---|---|---|---|---|---|---|
| | Run 1 | Run 2 | Run 3 | | | | Percent accuracy | Percent RSD |
| . | | | | | | | | |
| . | | | | | | | | |
| . | | | | | | | | |

ANALYSIS RESULTS—Continued

| Analyte | Weight percent determined | | | Mean Wt percent | Percent accuracx | Percent RSD | Meets criteria in Section 9.4.6 | |
|---|---|---|---|---|---|---|---|---|
| | Run 1 | Run 2 | Run 3 | | | | Percent accuracy | Percent RSD |
| . . . . . | | | | | | | | |

Calibration of Gas Chromatograph Calibrated By: _____

Calibration Date: _____

PART 1—RETENTION TIMES FOR INDIVIDUAL ANALYTES

| Analyte | Stock standard. ID No. | Recorder chart speed | | Distance from injection point to peak maximum | | Retention time, minutes [a] |
|---|---|---|---|---|---|---|
| | | Inches/min. | cm/min. | Inches | Centimeters | |
| . . . . . | | | | | | |

[a] Retention time = distance to peak maxima ÷ chart speed.

CALIBRATION OF GAS CHROMATOGRAPH Calibrated By: _____

Calibration Date: _____

PART 2—ANALYSIS OF CALIBRATION STANDARDS

| Analyte | Calib. STD ID No. | Calib. STD ID No. | Calib. STD ID No. |
|---|---|---|---|
| Name: | | | |
| Conc. in STD | | | |
| Area Response | | | |
| RT | | | |
| Name: | | | |
| Conc. in STD | | | |
| Area Response | | | |
| RT | | | |
| Name: | | | |
| Conc. in STD | | | |
| Area Response | | | |
| RT | | | |
| Name: | | | |
| Conc. in STD | | | |
| Area Response | | | |
| RT | | | |
| Name: | | | |
| Conc. in STD | | | |
| Area Response | | | |
| RT | | | |
| Name: | | | |
| Conc. in STD | | | |
| Area Response | | | |
| RT | | | |

PART 2—ANALYSIS OF CALIBRATION STANDARDS—Continued

| Analyte | Calib. STD ID No. | Calib. STD ID No. | Calib. STD ID No. |
|---|---|---|---|
| Name: | | | |
| Conc. in STD | | | |
| Area Response | | | |
| RT | | | |
| Name: | | | |
| Conc. in STD | | | |
| Area Response | | | |
| RT | | | |
| Internal Standard Name: | | | |
| Conc. in STD | | | |
| Area Response | | | |
| RT | | | |

Calibration of Gas Chromatograph Calibrated By: _____

Calibration Date: _____

PART 3—DATA ANALYSIS FOR CALIBRATION STANDARDS

| Analyte | Calib. STD ID | Calib. STD ID | Calib. STD ID | Mean | percent RSD of RF | Is RT within ±0.05 min of RT for stock? (Y/N) | Is percent RSD <30% (Y/N) |
|---|---|---|---|---|---|---|---|
| Name: | | | | | | | |
| RT | | | | | | | |
| RF | | | | | | | |
| Name: | | | | | | | |
| RT | | | | | | | |
| RF | | | | | | | |
| Name: | | | | | | | |
| RT | | | | | | | |
| RF | | | | | | | |
| Name: | | | | | | | |
| RT | | | | | | | |
| RF | | | | | | | |
| Name: | | | | | | | |
| RT | | | | | | | |
| RF | | | | | | | |
| Name: | | | | | | | |
| RT | | | | | | | |
| RF | | | | | | | |
| Name: | | | | | | | |
| RT | | | | | | | |
| RF | | | | | | | |

Daily Calibration Check Analyst: _____

Date: _____ Calibration Check Standard ID No.:

Expiration Date: _____

| Analyte | Retention Time (RT) | | | Response Factor (RF) | | |
|---|---|---|---|---|---|---|
| | Last | This | Difference [a] | Last | This | Difference [b] |
| . | | | | | | |
| . | | | | | | |
| . | | | | | | |
| . | | | | | | |
| . | | | | | | |
| . | | | | | | |
| . | | | | | | |
| . | | | | | | |
| . | | | | | | |
| . | | | | | | |
| . | | | | | | |

[a] Retention time (RT) change (difference) must be less than ±0.10 minutes.

[b] Response factor (RF) change (difference) must be less than 20 percent for each analyte and for the internal standard.

Sample Analysis

Vial A ID No.: _____

Vial B ID No.: _____

Analyzed By: _____

Date: _____

| Sample preparation information | Vial A (g) | Vial B (g) |
|---|---|---|
| Measured: | | |
| wt empty via. | | |
| wt plus DMF. | | |
| wt plus sample. | | |
| wt plus internal. | | |
| standard. | | |
| Calculated: | | |
| wt DMF. | | |
| wt sample. | | |
| wt internal standard. | | |

ANALYSIS RESULTS: DUPLICATE SAMPLES

| Analyte | Area response | | RF | Wt percent in sample | | |
|---|---|---|---|---|---|---|
| | Vial A | Vial B | | Vial A | Vial B | Average |
| . | | | | | | |
| . | | | | | | |
| . | | | | | | |
| . | | | | | | |
| . | | | | | | |
| . | | | | | | |
| . | | | | | | |
| . | | | | | | |
| . | | | | | | |
| . | | | | | | |
| . | | | | | | |
| . | | | | | | |
| Internal Standard. | | | | | | |

METHOD 312A—DETERMINATION OF STYRENE IN LATEX STYRENE-BUTADIENE RUBBER, THROUGH GAS CHROMATOGRAPHY

*1. Scope and Application*

1.1 This method describes a procedure for determining parts per million (ppm) styrene monomer (CAS No. 100–42–5) in aqueous samples, including latex samples and styrene stripper water.

1.2 The sample is separated in a gas chromatograph equipped with a packed column and a flame ionization detector.

*2.0 Summary of Method*

2.1 This method utilizes a packed column gas chromatograph with a flame ionization detector to determine the concentration of residual styrene in styrene butadiene rubber (SBR) latex samples.

*3.0 Definitions*

3.1 The definitions are included in the text as needed.

*4.0 Interferences*

4.1 In order to reduce matrix effects and emulsify the styrene, similar styrene free latex is added to the internal standard. There are no known interferences.

4.2 The operating parameters are selected to obtain resolution necessary to determine styrene monomer concentrations in latex.

*5.0 Safety*

5.1 It is the responsibility of the user of this procedure to establish appropriate safety and health practices.

*6.0 Equipment and Supplies*

6.1 Adjustable bottle-top dispenser, set to deliver 3 ml. (for internal standard), Brinkmann Dispensette, or equivalent.

6.2 Pipettor, set to 10 ml., Oxford Macroset, or equivalent.

6.3 Volumetric flask, 100-ml, with stopper.

6.4 Hewlett Packard Model 5710A dual channel gas chromatograph equipped with flame ionization detector.

6.4.1 11 ft. × ⅛ in. stainless steel column packed with 10% TCEP on 100/120 mesh Chromosorb P, or equivalent.

6.4.2 Perkin Elmer Model 023 strip chart recorder, or equivalent.

6.5 Helium carrier gas, zero grade.

6.6 Liquid syringe, 25-µl.

6.7 Digital MicroVAX 3100 computer with VG Multichrom software, or equivalent data handling system.

6.6 Wire Screens, circular, 70-mm, 80-mesh diamond weave.

6.7 DEHA—(N,N-Diethyl hydroxylamine), 97 + % purity, CAS No. 3710–84–7

6.8 p-Dioxane, CAS No. 123–91–1

*7.0 Reagents and Standards*

7.1 Internal standard preparation.

7.1.1 Pipette 5 ml p-dioxane into a 1000-ml volumetric flask and fill to the mark with distilled water and mix thoroughly.

7.2 Calibration solution preparation.

7.2.1 Pipette 10 ml styrene-free latex (eg: NBR latex) into a 100-ml volumetric flask.

7.2.2 Add 3 ml internal standard (section 7.1.1 of this method).

7.2.3 Weigh exactly 10 µl fresh styrene and record the weight.

7.2.4 Inject the styrene into the flask and mix well.

7.2.5 Add 2 drops of DEHA, fill to the mark with water and mix well again.

7.2.6 Calculate concentration of the calibration solution as follows:

mg/l styrene = (mg styrene added)/0.1 L

*8.0 Sample Collection, Preservation, and Storage*

8.1 A representative SBR emulsion sample should be caught in a clean, dry 6-oz. teflon lined glass container. Close it properly to assure no sample leakage.

8.2 The container should be labeled with sample identification, date and time.

*9.0 Quality Control*

9.1 The instrument is calibrated by injecting calibration solution (Section 7.2 of this method) five times.

9.2 The retention time for components of interest and relative response of monomer to the internal standard is determined.

9.3 Recovery efficiency must be determined once for each sample type and whenever modifications are made to the method.

9.3.1 A set of six latex samples shall be collected. Two samples shall be prepared for analysis from each sample. Each sample shall be analyzed in duplicate.

9.3.2 The second set of six latex samples shall be analyzed in duplicate before spiking each sample with approximately 1000 ppm styrene. The spiked samples shall be analyzed in duplicate.

9.3.3 For each hydrocarbon, calculate the average recovery efficiency (R) using the following equations:

where:

$R=\Sigma(R_n)/6$

where:

$R_n = (c_{ns} - c_v)/S_n$

n = sample number

$c_{ns}$ = concentration of compound measured in spiked sample number n.

$c_{nu}$ = concentration of compound measured in unspiked sample number n.

$S_n$ = theoretical concentration of compound spiked into sample n.

9.3.4 A value of R between 0.70 and 1.30 is acceptable.

9.3.5 R is used to correct all reported results for each compound by dividing the measured results of each compound by the R for that compound for the same sample type.

*10.0 Calibration and Instrument Settings*

10.1 Injection port temperature, 250 °C.

10.2 Oven temperature, 110 °C, isothermal.

10.3 Carrier gas flow, 25 cc/min.

10.4 Detector temperature, 250 °C.

10.5 Range, 1X.

*11.0 Procedure*

11.1 Turn on recorder and adjust baseline to zero.

11.2 Prepare sample.

11.2.1 For latex samples, add 3 ml Internal Standard (section 7.1 of this method) to a 100-ml volumetric flask. Pipet 10 ml sample into the flask using the Oxford pipettor, dilute to the 100-ml mark with water, and shake well.

11.2.2 For water samples, add 3 ml Internal Standard (section 7.1 of this method) to a 100-ml volumetric flask and fill to the mark with sample. Shake well.

11.3 Flush syringe with sample.

11.4 Carefully inject 2 µl of sample into the gas chromatograph column injection port and press the start button.

11.5 When the run is complete the computer will print a report of the analysis.

*12.0 Data Analysis and Calculation*

12.1 For samples that are prepared as in section 11.2.1 of this method:

ppm styrene = A × D

Where:

A = ''ppm'' readout from computer

D = dilution factor (10 for latex samples)

12.2 For samples that are prepared as in section 11.2.2 of this method, ppm styrene is read directly from the computer.

*13.0 Method Performance*

13.1 This test has a standard deviation (1) of 3.3 ppm at 100 ppm styrene. The average Spike Recovery from six samples at 1000 ppm Styrene was 96.7 percent. The test method was validated using 926 ppm styrene standard. Six analysis of the same standard provided average 97.7 percent recovery. Note:

These are example recoveries and do not replace quality assurance procedures in this method.

*14.0 Pollution Prevention*

14.1 Waste generation should be minimized where possible. Sample size should be an amount necessary to adequately run the analysis.

*15.0 Waste Management*

15.1 All waste shall be handled in accordance with Federal and State environmental regulations.

*16.0 References and Publications*

16.1 40 CFR 63 Appendix A—Method 301 Test Methods Field Validation of Pollutant Measurement

16.2 DSM Copolymer Test Method T–3060, dated October 19, 1995, entitled: *Determination of Residual Styrene in Latex*, Leonard, C.D., Vora, N.M.*et al*

METHOD 312B—DETERMINATION OF RESIDUAL STYRENE IN STYRENE-BUTADIENE (SBR) RUBBER LATEX BY CAPILLARY GAS CHROMATOGRAPHY

*1.0 Scope*

1.1 This method is applicable to SBR latex solutions.

1.2 This method quantitatively determines residual styrene concentrations in SBR latex solutions at levels from 80 to 1200 ppm.

*2.0 Principle of Method*

2.1 A weighed sample of a latex solution is coagulated with an ethyl alcohol (EtOH) solution containing a specific amount of alpha-methyl styrene (AMS) as the internal standard. The extract of this coagulation is then injected into a gas chromatograph and separated into individual components. Quantification is achieved by the method of internal standardization.

*3.0 Definitions*

3.1 The definitions are included in the text as needed.

*4.0 Interferences* [Reserved]

*5.0 Safety*

5.1 This method may involve hazardous materials, operations, and equipment. This method does not purport to address all of the safety problems associated with its use. It is the responsibility of the user of this method to establish appropriate safety and health practices and determine the applicability of regulatory limitations prior to use.

*6.0 Equipment and Supplies*

6.1 Analytical balance, 160 g capacity, and 0.1 mg resolution

6.2 Bottles, 2-oz capacity, with poly-cap screw lids

6.3 Mechanical shaker

6.4 Syringe, 10-ul capacity

6.5 Gas chromatograph, Hewlett Packard model 5890A, or equivalent, configured with FID with a megabore jet, splitless injector packed with silanized glass wool.

6.5.1 Establish the following gas chromatographic conditions, and allow the system to thoroughly equilibrate before use.

Injection technique = Splitless
Injector temperature = 225 deg C
Oven temperature = 70 deg C (isothermal)
Detector: temperature = 300 deg C
range = 5
attenuation = 0
Carrier gas: helium = 47 ml/min
Detector gases: hydrogen = 30 ml/min
air = 270 ml/min
make-up = 0 ml/min
Analysis time: = 3.2 min at the specified carrier gas flow rate and column temperature.

6.6 Gas chromatographic column, DB–1, 30 M X 0.53 ID, or equivalent, with a 1.5 micron film thickness.

6.7 Data collection system, Perkin-Elmer/Nelson Series Turbochrom 4 Series 900 Interface, or equivalent.

6.8 Pipet, automatic dispensing, 50-ml capacity, and 2-liter reservoir.

6.9 Flasks, volumetric, class A, 100-ml and 1000-ml capacity.

6.10 Pipet, volumetric delivery, 10-ml capacity, class A.

*7.0 Chemicals and Reagents*

CHEMICALS:

7.1 Styrene, C8H8, 99 + %, CAS 100–42–5

7.2 Alpha methyl styrene, C9H10, 99%, CAS 98–83–9

7.3 Ethyl alcohol, C2H5OH, denatured formula 2B, CAS 64–17–5

REAGENTS:

7.4 Internal Standard Stock Solution: 5.0 mg/ml AMS in ethyl alcohol.

7.4.1 Into a 100-ml volumetric flask, weigh 0.50 g of AMS to the nearest 0.1 mg.

7.4.2 Dilute to the mark with ethyl alcohol. This solution will contain 5.0 mg/ml AMS in ethyl alcohol and will be labeled the AMS STOCK SOLUTION.

7.5 Internal Standard Working Solution: 2500 ug/50 ml of AMS in ethyl alcohol.

7.5.1 Using a 10 ml volumetric pipet, quantitatively transfer 10.0 ml of the AMS STOCK SOLUTION into a 1000-ml volumetric flask.

7.5.2 Dilute to the mark with ethyl alcohol. This solution will contain 2500 ug/50ml of AMS in ethyl alcohol and will be labeled the AMS WORKING SOLUTION.

7.5.3 Transfer the AMS WORKING SOLUTION to the automatic dispensing pipet reservoir.

7.6 Styrene Stock Solution: 5.0 mg/ml styrene in ethyl alcohol.

7.6.1 Into a 100-ml volumetric flask, weigh 0.50 g of styrene to the nearest 0.1 mg.

7.6.2 Dilute to the mark with ethyl alcohol. This solution will contain 5.0 mg/ml styrene in ethyl alcohol and will be labeled the STYRENE STOCK SOLUTION.

7.7 Styrene Working Solution: 5000 ug/10 ml of styrene in ethyl alcohol.

7.7.1 Using a 10-ml volumetric pipet, quantitatively transfer 10.0 ml of the STYRENE STOCK SOLUTION into a 100-ml volumetric flask.

7.7.2 Dilute to the mark with ethyl alcohol. This solution will contain 5000 ug/10 ml of styrene in ethyl alcohol and will be labeled the STYRENE WORKING SOLUTION.

*8.0 Sample Collection, Preservation and Storage*

8.1 Label a 2-oz sample poly-cap lid with the identity, date and time of the sample to be obtained.

8.2 At the sample location, open sample valve for at least 15 seconds to ensure that the sampling pipe has been properly flushed with fresh sample.

8.3 Fill the sample jar to the top (no headspace) with sample, then cap it tightly.

8.4 Deliver sample to the Laboratory for testing within one hour of sampling.

8.5 Laboratory testing will be done within two hours of the sampling time.

8.6 No special storage conditions are required unless the storage time exceeds 2 hours in which case refrigeration of the sample is recommended.

*9.0 Quality Control*

9.1 For each sample type, 12 samples of SBR latex shall be obtained from the process for the recovery study. Half the vials and caps shall be tared, labeled ''spiked'', and numbered 1 through 6. The other vials are labeled ''unspiked'' and need not be tared, but are also numbered 1 through 6.

9.2 The six vials labeled ''spiked'' shall be spiked with an amount of styrene to approximate 50% of the solution's expected residual styrene level.

9.3 The spiked samples shall be shaken for several hours and allowed to cool to room temperature before analysis.

9.4 The six samples of unspiked solution shall be coagulated and a mean styrene value shall be determined, along with the standard deviation, and the percent relative standard deviation.

9.5 The six samples of the spiked solution shall be coagulated and the results of the analyses shall be determined using the following equations:

$M_r = M_s - M_u$

$R = M_r/S$

where:

$M_u$ = Mean value of styrene in the unspiked sample

$M_s$ = Measured amount of styrene in the spiked sample

$M_r$ = Measured amount of the spiked compound

S = Amount of styrene added to the spiked sample

R = Fraction of spiked styrene recovered

9.6 A value of R between 0.70 and 1.30 is acceptable.

9.7 R is used to correct all reported results for each compound by dividing the measured results of each compound by the R for that compound for the same sample type.

*10.0 Calibration*

10.1 Using a 10-ml volumetric pipet, quantitatively transfer 10.0 ml of the STYRENE WORKING SOLUTION (section 7.7.2 of this method) into a 2-oz bottle.

10.2 Using the AMS WORKING SOLUTION equipped with the automatic dispensing pipet (section 7.5.3 of this method), transfer 50.0 ml of the internal standard solution into the 2-oz bottle.

10.3 Cap the 2-oz bottle and swirl. This is the calibration standard, which contains 5000 µg of styrene and 2500 µg of AMS.

10.4 Using the conditions prescribed (section 6.5 of this method), chromatograph 1 µl of the calibration standard.

10.5 Obtain the peak areas and calculate the relative response factor as described in the calculations section (section 12.1 of this method).

*11.0 Procedure*

11.1 Into a tared 2-oz bottle, weigh 10.0 g of latex to the nearest 0.1 g.

11.2 Using the AMS WORKING SOLUTION equipped with the automatic dispensing pipet (section 7.5.3 of this method), transfer 50.0 ml of the internal standard solution into the 2-oz bottle.

11.3 Cap the bottle. Using a mechanical shaker, shake the bottle for at least one minute or until coagulation of the latex is complete as indicated by a clear solvent.

11.4 Using the conditions prescribed (section 6.5 of this method), chromatograph 1 ul of the liquor.

11.5 Obtain the peak areas and calculate the concentration of styrene in the latex as described in the calculations section (Section 12.2 of this method).

*12.0 Calculations*

12.1 Calibration:

$RF = (W_x \times A_{is}) / (W_{is} \times A_x)$

where:

RF = the relative response factor for styrene

$W_x$ = the weight (ug) of styrene

$A_{is}$ = the area of AMS
$W_{is}$ = the weight (ug) of AMS
$A_x$ = the area of styrene
12.2 Procedure:

$ppm_{styrene} = (A_x\ RF \times W_{is}) / (A_{is} \times W_s)$

where:

$ppm_{styrene}$ = parts per million of styrene in the latex
$A_x$ = the area of styrene
RF = the response factor for styrene
$W_{is}$ = the weight (ug) of AMS
$A_{is}$ = the area of AMS
$W_s$ = the weight (g) of the latex sample

12.3 Correct for recovery (R) as determined by section 9.0 of this method.

*13.0 Precision*

13.1 Precision for the method was determined at the 80, 144, 590, and 1160 ppm levels. The standard deviations were 0.8, 1.5, 5 and 9 ppm respectively. The percent relative standard deviations (%RSD) were 1% or less at all levels. Five degrees of freedom were used for all precision data except at the 80 ppm level, where nine degrees of freedom were used. Note: These are example results and do not replace quality assurance procedures in this method.

*14.0 Pollution Prevention*

14.1 Waste generation should be minimized where possible. Sample size should be an amount necessary to adequately run the analysis.

*15.0 Waste Management*

15.1 Discard liquid chemical waste into the chemical waste drum.

15.2 Discard latex sample waste into the latex waste drum.

15.3 Discard polymer waste into the polymer waste container.

*16.0 References*

16.1 This method is based on Goodyear Chemical Division Test Method E–889.

METHOD 312C—DETERMINATION OF RESIDUAL STYRENE IN SBR LATEX PRODUCED BY EMULSION POLYMERIZATION

*1.0 Scope*

1.1 This method is applicable for determining the amount of residual styrene in SBR latex as produced in the emulsion polymerization process.

*2.0 Principle of Method*

2.1 A weighed sample of latex is coagulated in 2-propanol which contains alpha-methyl styrene as an Internal Standard. The extract from the coagulation will contain the alpha-methyl styrene as the Internal Standard and the residual styrene from the latex. The extract is analyzed by a Gas Chromatograph. Percent styrene is calculated by relating the area of the styrene peak to the area of the Internal Standard peak of known concentration.

*3.0 Definitions*

3.1 The definitions are included in the text as needed.

*4.0 Interferences* [Reserved]

*5.0 Safety*

5.1 When using solvents, avoid contact with skin and eyes. Wear hand and eye protection. Wash thoroughly after use.

5.2 Avoid overexposure to solvent vapors. Handle only in well ventilated areas.

*6.0 Equipment and Supplies*

6.1 *Gas Chromatograph*—Hewlett Packard 5890, Series II with flame ionization detector, or equivalent.

*Column*—HP 19095F–123, 30m × 0.53mm, or equivalent. Substrate HP FFAP (cross-linked) film thickness 1 micrometer. Glass injector port liners with silanized glass wool plug.

*Integrator*—HP 3396, Series II, or equivalent.

6.2 Wrist action shaker
6.3 Automatic dispenser
6.4 Automatic pipet, calibrated to deliver 5.0 ±0.01 grams of latex
6.5 Four-ounce wide-mouth bottles with foil lined lids
6.6 Crimp cap vials, 2ml, teflon lined septa
6.7 Disposable pipets
6.8 Qualitative filter paper
6.9 Cap crimper
6.10 Analytical balance
6.11 10ml pipette
6.12 Two-inch funnel

*7.0 Reagents and Standards*

7.1 2-Propanol (HP2C grade)
7.2 Alpha methyl styrene (99 + % purity)
7.3 Styrene (99 + % purity)
7.4 Zero air
7.5 Hydrogen (chromatographic grade)
7.6 Helium
7.7 Internal Standard preparation

7.7.1 Weigh 5.000–5.005 grams of alpha-methyl styrene into a 100ml volumetric flask and bring to mark with 2-propanol to make Stock ''A'' Solution.

NOTE: Shelf life—6 months.

7.7.2 Pipette 10ml of Stock ''A'' Solution into a 100ml volumetric flask and bring to mark with 2-propanol to prepare Stock ''B'' Solution.

7.7.3 Pipette 10ml of the Stock ''B'' solution to a 1000ml volumetric flask and bring to the mark with 2-propanol. This will be the Internal Standard Solution (0.00005 grams/ml).

7.8 Certification of Internal Standard—Each batch of Stock ''B'' Solution will be certified to confirm concentration.

7.8.1 Prepare a Standard Styrene Control Solution in 2-propanol by the following method:

7.8.1.1 Weigh 5.000 ±.005g of styrene to a 100ml volumetric flask and fill to mark with 2-propanol to make Styrene Stock ''A'' Solution.

7.8.1.2 Pipette 10ml of Styrene Stock ''A'' Solution to a 100ml volumetric flask and fill to mark with 2-propanol to make Styrene Stock ''B'' Solution.

7.8.1.3 Pipette 10ml of Styrene Stock ''B'' soluion to a 250ml volumtric flask and fill to mark wtih 2-propanol to make the Certification Solution.

7.8.2 Certify Alpha-Methyl Styrene Stock ''B'' Solution.

7.8.2.1 Pipette 5ml of the Certification Solution and 25ml of the Alpha Methyl Styrene Internal Standard Solution to a 4-oz. bottle, cap and shake well.

7.8.2.2 Analyze the resulting mixture by GC using the residual styrene method. (11.4–11.6 of this method)

7.8.2.3 Calculate the weight of alpha methyl styrene present in the 25ml aliquat of the new Alpha Methyl Styrene Standard by the following equation:

$W_x = F_x \, xW_{is}(A_x/A_{is})$

Where

$A_x$ = Peak area of alpha methyl styrene

$A_{is}$ = Peak area of styrene

$W_x$ = Weight of alpha methyl styrene

$W_{is}$ = Weight of styrene (.00100)

$F_x$ = Analyzed response factor = 1

The Alpha Methyl Styrene Stock Solution used to prepare the Internal Standard Solution may be considered certified if the weight of alpha methyl styrene analyzed by this method is within the range of .00121g to .00129g.

*8.0 Sampling*

8.1 Collect a latex sample in a capped container. Cap the bottle and identify the sample as to location and time.

8.2 Deliver sample to Laboratory for testing within one hour.

8.3 Laboratory will test within two hours.

8.4 No special storage conditions are required.

*9.0 Quality Control*

9.1 The laboratory is required to operate a formal quality control program. This consists of an initial demonstration of the capability of the method as well as ongoing analysis of standards, blanks, and spiked samples to demonstrate continued performance.

9.1.1 When the method is first set up, a calibration is run and the recovery efficiency for each type of sample must be determined.

9.1.2 If new types of samples are being analyzed, then recovery efficiency for each new type of sample must be determined. New type includes any change, such as polymer type, physical form or a significant change in the composition of the matrix.

9.2 Recovery efficiency must be determined once for each sample type and whenever modifications are made to the method.

9.2.1 In determining the recovery efficiency, the quadruplet sampling system shall be used. Six sets of samples (for a total of 24) shall be taken. In each quadruplet set, half of the samples (two out of the four) shall be spiked with styrene.

9.2.2 Prepare the samples as described in section 8 of this method. To the vials labeled ''spiked'', add a known amount of styrene that is expected to be present in the latex.

9.2.3 Run the spiked and unspiked samples in the normal manner. Record the concentrations of styrene reported for each pair of spiked and unspiked samples with the same vial number.

9.2.4 For each hydrocarbon, calculate the average recovery efficiency (R) using the following equation:

$R=\Sigma(R_n)/12$

Where: n = sample number

$R_n = (M_s - M_u)/S$

$M_s$ = total mass of compound (styrene) measured in spiked sample (μg)

$M_u$ = total mass of compound (styrene) measured in unspiked sample (μg)

S = theoretical mass of compound (styrene) spiked into sample (μg)

R = fraction of spiked compound (styrene) recovered

9.2.5 A different R value should be obtained for each sample type. A value of R between 0.70 and 1.30 is acceptable.

9.2.6 R is used to correct all reported results for each compound by dividing the measured results of each compound by the R for that compound for the same sample type.

*10.0 Calibration*

A styrene control sample will be tested weekly to confirm the FID response and calibration.

10.1 Using the Styrene Certification Solution prepared in 7.8.1, perform test analysis as described in 7.8.2 using the equation in 7.8.2.3 to calculate results.

10.2 Calculate the weight of styrene in the styrene control sample using the following equation:

$W_{sty} = (F_x \, xA_{sty} \, xW_{is})A_{is}$

The instrument can be considered calibrated if the weight of the styrene analyzed is within range of 0.00097–0.00103gms.

*11.0 Procedure*

11.1 Using an auto pipet, add 25ml of Internal Standard Solution to a 4 oz. wide-mouth bottle.

11.2 Using a calibrated auto pipet, add 5.0 ±0.01g latex to the bottle containing the 25ml of Internal Standard Solution.

11.3 Cap the bottle and place on the wrist action shaker. Shake the sample for a minimum of five minutes using the timer on the shaker. Remove from shaker.

11.4 Using a disposable pipet, fill the 2ml sample vial with the clear alcohol extract. (If the extract is not clear, it should be filtered using a funnel and filter paper.) Cap and seal the vial.

11.5 Place the sample in the autosampler tray and start the GC and Integrator. The sample will be injected into the GC by the auto-injector, and the Integrator will print the results.

11.6 *Gas Chromatograph Conditions*

Oven Temp—70 °C
Injector Temp—225 °C
Detector Temp—275 °C
Helium Pressure—500 KPA
Column Head Pressure—70 KPA
Makeup Gas—30 ml/min.
Column—HP 19095F—123, 30m × 0.53mm Substrate: HP—FFAP (cross-linked) 1 micrometer film thickness

*12.0 Calculations*

12.1 The integrator is programmed to do the following calculation at the end of the analysis:

$$\%ResidualStyrene = (A_x\ XW_{is})/(A_{is}\ XW_x)XF_x\ X100$$

Where:
$A_x$ = Peak area of styrene
$A_{is}$ = Peak area of internal standard
$W_x$ = Weight of sample = 5g
$W_{is}$ = Weight of internal std. = 0.00125g
$F_x$ = Analyzed response factor = 1.0

12.2 The response factor is determined by analyzing a solution of 0.02g of styrene and 0.02g of alpha methyl styrene in 100ml of 2-propanol. Calculate the factor by the following equation:

$$F_x = (W_x\ xA_{is})/(W_{is}\ xA_x)$$

Where:
$W_x$ = Weight of styrene
$A_x$ = Peak area of styrene
$W_{is}$ = Weight of alpha methyl styrene
$A_{is}$ = Peak area of alpha methyl styrene

*13.0 Method Performance*

13.1 Performance must be determined for each sample type by following the procedures in section 9 of this method.

*14.0 Waste Generation*

14.1 Waste generation should be minimized where possible.

*15.0 Waste Management*

15.1 All waste shall be handled in accordance with Federal and State environmental regulations.

*16.0 References* [Reserved]

METHOD 313A—DETERMINATION OF RESIDUAL HYDROCARBONS IN RUBBER CRUMB

*1.0 Scope and Application*

1.1 This method determines residual toluene and styrene in stripper crumb of the of the following types of rubber: polybutadiene (PBR) and styrene/butadiene rubber (SBR), both derived from solution polymerization processes that utilize toluene as the polymerization solvent.

1.2 The method is applicable to a wide range of concentrations of toluene and styrene provided that calibration standards cover the desired range. It is applicable at least over the range of 0.01 to 10.0 % residual toluene and from 0.1 to 3.0 % residual styrene. It is probably applicable over a wider range, but this must be verified prior to use.

1.3 The method may also be applicable to other process samples as long as they are of a similar composition to stripper crumb. See section 3.1 of this method for a description of stripper crumb.

*2.0 Summary of Method*

2.1 The wet crumb is placed in a sealed vial and run on a headspace sampler which heats the vial to a specified temperature for a specific time and then injects a known volume of vapor into a capillary GC. The concentration of each component in the vapor is proportional to the level of that component in the crumb sample and does not depend on water content of the crumb.

2.2 Identification of each component is performed by comparing the retention times to those of known standards.

2.3 Results are calculated by the external standard method since injections are all performed in an identical manner. The response for each component is compared with that obtained from dosed samples of crumb.

2.4 Measured results of each compound are corrected by dividing each by the average recovery efficiency determined for the same compound in the same sample type.

*3.0 Definitions*

3.1 Stripper crumb refers to pieces of rubber resulting from the steam stripping of a toluene solution of the same polymer in a water slurry. The primary component of this will be polymer with lesser amounts of entrained water and residual toluene and other hydrocarbons. The amounts of hydrocarbons present must be such that the crumb is a solid material, generally less that 10 % of the dry rubber weight.

*4.0 Interferences*

4.1 Contamination is not normally a problem since samples are sealed into vials immediately on sampling.

4.2 Cross contamination in the headspace sampler should not be a problem if the correct sampler settings are used. This should be verified by running a blank sample immediately following a normal or high sample. Settings may be modified if necessary if this proves to be a problem, or a blank sample may be inserted between samples.

4.3 Interferences may occur if volatile hydrocarbons are present which have retention times close to that of the components of interest. Since the solvent makeup of the processes involved are normally fairly well defined this should not be a problem. If it is found to be the case, switching to a different chromatographic column will probably resolve the situation.

*5.0 Safety*

5.1 The chemicals specified in this method should all be handled according to standard laboratory practices as well as any special precautions that may be listed in the MSDS for that compound.

5.2 Sampling of strippers or other process streams may involve high pressures and temperatures or may have the potential for exposure to chemical fumes. Only personnel who have been trained in the specific sampling procedures required for that process should perform this operation. An understanding of the process involved is necessary. Proper personal protective equipment should be worn. Any sampling devices should be inspected prior to use. A detailed sampling procedure which specifies exactly how to obtain the sample must be written and followed.

*6.0 Equipment and Supplies*

6.1 Hewlett Packard (HP) 7694 Headspace sampler, or equivalent, with the following conditions:

Times (min.): GC cycle time 6.0 , vial equilibration 30.0 , pressurization 0.25 , loop fill 0.25, loop equilibration 0.05 , inject 0.25

Temperatures (deg C): oven 70, loop 80, transfer line 90

Pressurization gas: He @ 16 psi

6.2 HP 5890 Series II capillary gas chromatograph, or equivalent, with the following conditions:

Column: Supelco SPB–1, or equivalent, 15m × .25mm × .25 μ film

Carrier: He @ 6 psi

Run time: 4 minutes

Oven: 70 deg C isothermal

Injector: 200 deg C split ratio 50:1

Detector: FID @ 220 deg C

6.3 HP Chemstation consisting of computer, printer and Chemstation software, or an equivalent chromatographic data system.

6.4 20 ml headspace vials with caps and septa.

6.5 Headspace vial crimper.

6.6 Microliter pipetting syringes.

6.7 Drying oven at 100 deg C vented into cold trap or other means of trapping hydrocarbons released.

6.8 Laboratory shaker or tumbler suitable for the headspace vials.

6.9 Personal protective equipment required for sampling the process such as rubber gloves and face and eye protection.

*7.0 Reagents and Standards*

7.1 Toluene, 99.9 + % purity, HPLC grade.

7.2 Styrene, 99.9 + % purity, HPLC grade.

7.3 Dry rubber of same type as the stripper crumb samples.

*8.0 Sample Collection, Preservation and Storage*

8.1 Collect a sample of crumb in a manner appropriate for the process equipment being sampled.

8.1.1 If conditions permit, this may be done by passing a stream of the crumb slurry through a strainer, thus separating the crumb from the water. Allow the water to drain freely, do not attempt to squeeze any water from the crumb. Results will not depend on the exact water content of the samples. Immediately place several pieces of crumb directly into a headspace vial. This should be done with rubber gloves to protect the hands from both the heat and from contact with residual hydrocarbons. The vial should be between ¼ and ⅓ full. Results do not depend on sample size as long as there is sufficient sample to reach an equilibrium vapor pressure in the headspace of the vial. Cap and seal the vial. Prepare each sample at least in duplicate. This is to minimize the effect of the variation that naturally occurs in the composition of non homogeneous crumb. The free water is not analyzed by this method and should be disposed of appropriately along with any unused rubber crumb.

8.1.2 Alternatively the process can be sampled in a specially constructed sealed bomb which can then be transported to the laboratory. The bomb is then cooled to ambient temperature by applying a stream of running water. The bomb can then be opened and the crumb separated from the water and the vials filled as described in section 8.1.1 of this method. The bomb may be stored up to 8 hours prior to transferring the crumb into vials.

8.2 The sealed headspace vials may be run immediately or may be stored up to 72 hours prior to running. It is possible that even longer storage times may be acceptable, but this must be verified for the particular type of sample being analyzed (see section 9.2.3 of

this method). The main concern here is that some types of rubber eventually may flow, thus compacting the crumb so that the surface area is reduced. This may have some effect on the headspace equilibration.

*9.0 Quality Control*

9.1 The laboratory is required to operate a formal quality control program. This consists of an initial demonstration of the capability of the method as well as ongoing analysis of standards, blanks and spiked samples to demonstrate continued performance.

9.1.1 When the method is first set up a calibration is run (described in section 10 of this method) and an initial demonstration of method capability is performed (described in section 9.2 of this method). Also recovery efficiency for each type of sample must be determined (see section 9.4 of this method).

9.1.2 It is permissible to modify this method in order to improve separations or make other improvements, provided that all performance specifications are met. Each time a modification to the method is made it is necessary to repeat the calibration (section 10 of this method), the demonstration of method performance (section 9.2 of this method) and the recovery efficiency for each type of sample (section 9.4 of this method).

9.1.3 Ongoing performance should be monitored by running a spiked rubber standard. If this test fails to demonstrate that the analysis is in control, then corrective action must be taken. This method is described in section 9.3 of this method.

9.1.4 If new types of samples are being analyzed then recovery efficiency for each new type of sample must be determined. New type includes any change, such as polymer type, physical form or a significant change in the composition of the matrix.

9.2 Initial demonstration of method capability to establish the accuracy and precision of the method. This is to be run following the calibration described in section 10 of this method.

9.2.1 Prepare a series of identical spiked rubber standards as described in section 9.3 of this method. A sufficient number to determine statistical information on the test should be run. Ten may be a suitable number, depending on the quality control methodology used at the laboratory running the tests. These are run in the same manner as unknown samples (see section 11 of this method).

9.2.2 Determine mean and standard deviation for the results. Use these to determine the capability of the method and to calculate suitable control limits for the ongoing performance check which will utilize the same standards.

9.2.3 Prepare several additional spiked rubber standards and run 2 each day to determine the suitability of storage of the samples for 24, 48 and 72 hours or longer if longer storage times are desired.

9.3 A spiked rubber standard should be run on a regular basis to verify system performance. This would probably be done daily if samples are run daily. This is prepared in the same manner as the calibration standards (section 10.1 of this method), except that only one concentration of toluene and styrene is prepared. Choose concentrations of toluene and styrene that fall in the middle of the range expected in the stripper crumb and then do not change these unless there is a major change in the composition of the unknowns. If it becomes necessary to change the composition of this standard the initial performance demonstration must be repeated with the new standard (section 9.2 of this method).

9.3.1 Each day prepare one spiked rubber standard to be run the following day. The dry rubber may be prepared in bulk and stored for any length of time consistent with the shelf life of the product. The addition of water and hydrocarbons must be performed daily and all the steps described under section 10.1 of this method must be followed.

9.3.2 Run the spiked rubber standard prepared the previous day. Record the results and plot on an appropriate control chart or other means of determining statistical control.

9.3.3 If the results for the standard indicate that the test is out of control then corrective action must be taken. This may include a check on procedures, instrument settings, maintenance or recalibration. Samples may be stored (see section 8.2 of this method) until compliance is demonstrated.

9.4 Recovery efficiency must be determined once for each sample type and whenever modifications are made to the method.

9.4.1 For each sample type collect 12 samples from the process (section 8.1 of this method). This should be done when the process is operating in a normal manner and residual hydrocarbon levels are in the normal range. Half the vials and caps should be tared, labeled ''spiked'' and numbered 1 through 6. The other vials are labeled ''unspiked'' and need not be tared but are also numbered 1 through 6. Immediately on sampling, the vials should be capped to prevent loss of volatiles. Allow all the samples to cool completely to ambient temperature. Reweigh each of the vials labeled ''spiked'' to determine the weight of wet crumb inside.

9.4.2 The dry weight of rubber present in the wet crumb is estimated by multiplying the weight of wet crumb by the fraction of nonvolatiles typical for the sample. If this is not known, an additional quantity of crumb may be sampled, weighed, dried in an oven and reweighed to determine the fraction of volatiles and nonvolatiles prior to starting this procedure.

9.4.3 To the vials labeled ''spiked'' add an amount of a mixture of toluene and styrene that is between 40 and 60 % of the amount expected in the crumb. This is done by removing the cap, adding the mixture by syringe, touching the tip of the needle to the sample in order to remove the drop and then immediately recapping the vials. The mixture is not added through the septum, because a punctured septum may leak and vent vapors as the vial is heated. The weights of toluene and styrene added may be calculated from the volumes of the mixture added, its composition and density, or may be determined by the weight of the vials and caps prior to and after addition. The exact dry weight of rubber present and the concentration of residual toluene and styrene are not known at this time so an exact calculation of the concentration of hydrocarbons is not possible until the test is completed.

9.4.4 Place all the vials onto a shaker or tumbler for 24 ±2 hours. This is essential in order for the hydrocarbons to be evenly distributed and completely absorbed into the rubber. If this is not followed the toluene and styrene will be mostly at the surface of the rubber and high results will be obtained.

9.4.5 Remove the vials from the shaker and tap them so that all the crumb settles to the bottom of the vials. Allow them to stand for 1 hour prior to analysis to allow any liquid to drain fully to the bottom.

9.4.6 Run the spiked and unspiked samples in the normal manner. Record the concentrations of toluene and styrene reported for each pair of spiked and unspiked samples with the same vial number.

9.4.7 Open each of the vials labeled ''spiked'', remove all the rubber crumb and place it into a tarred drying pan. Place in a 100 deg C oven for two hours, cool and reweigh. Subtract the weight of the tare to give the dry weight of rubber in each spiked vial. Calculate the concentration of toluene and styrene spiked into each vial as percent of dry rubber weight. This will be slightly different for each vial since the weights of dry rubber will be different.

9.4.8 For each hydrocarbon calculate the average recovery efficiency (R) using the following equations:

$R = R_\Sigma(P_n)/6$ (average of the 6 individual $R_n$ values)

Where:

$R_n = (C_{ns}—C_{nu}) / S_n$

Where:

n = vial number

Cns = concentration of compound measured in spiked sample number n.

Cnu = concentration of compound measured in unspiked sample number n.

Sn = theoretical concentration of compound spiked into sample n calculated in step 9.4.7

9.4.9 A different R value should be obtained for each compound (styrene and toluene) and for each sample type.

9.4.10 A value of R between 0.70 and 1.30 is acceptable.

9.4.11 R is used to correct all reported results for each compound by dividing the measured results of each compound by the R for that compound for the same sample type (see section 12.2 of this method.)

*10.0 Calibration*

10.1 Calibration standards are prepared by dosing known amounts of the hydrocarbons of interest into vials containing known amounts of rubber and water.

10.1.1 Cut a sufficient quantity of dry rubber of the same type as will be analyzed into pieces about the same size as that of the crumb. Place these in a single layer on a piece of aluminum foil or other suitable surface and place into a forced air oven at 100 °C for four hours. This is to remove any residual hydrocarbons that may be present. This step may be performed in advance.

10.1.2 Into each of a series of vials add 3.0 g of the dry rubber.

10.1.3 Into each vial add 1.0 ml distilled water or an amount that is close to the amount that will be present in the unknowns. The exact amount of water present does not have much effect on the analysis, but it is necessary to have a saturated environment. The water will also aid in the uniform distribution of the spiked hydrocarbons over the surface of the rubber after the vials are placed on the shaker (in step 10.1.5 of this method).

10.1.4 Into each vial add varying amounts of toluene and styrene by microliter syringe and cap the vials immediately to prevent loss. The tip of the needle should be carefully touched to the rubber in order to transfer the last drop to the rubber. Toluene and styrene may first be mixed together in suitable proportions and added together if desired. The weights of toluene and styrene added may be calculated from the volumes of the mixture added, its composition and density, or may be determined by the weight of the vials and caps prior to and after addition. Concentrations of added hydrocarbons are calculated as percent of the dry rubber weight. At least 5 standards should be prepared with the amounts of hydrocarbons added being calculated to cover the entire range possible in the unknowns. Retain two samples with no added hydrocarbons as blanks.

10.1.5 Place all the vials onto a shaker or tumbler for 24 ±2 hours. This is essential in order for the hydrocarbons to be evenly distributed and completely absorbed into the rubber. If this is not followed the toluene and styrene will be mostly at the surface of the rubber and high results will be obtained.

10.1.6 Remove the vials from the shaker and tap them so that all the crumb settles to the bottom of the vials. Allow them to stand for 1 hour prior to analysis to allow any liquid to drain fully to the bottom.

10.2 Run the standards and blanks in the same manner as described for unknowns (section 11 of this method), starting with a blank, then in order of increasing hydrocarbon content and ending with the other blank.

10.3 Verify that the blanks are sufficiently free from toluene and styrene or any interfering hydrocarbons.

10.3.1 It is possible that trace levels may be present even in dry product. If levels are high enough that they will interfere with the calibration then the drying procedure in section 10.1.1 of this method should be reviewed and modified as needed to ensure that suitable standards can be prepared.

10.3.2 It is possible that the final blank is contaminated by the previous standard. If this is the case review and modify the sampler parameters as needed to eliminate this problem. If necessary it is possible to run blank samples between regular samples in order to reduce this problem, though it should not be necessary if the sampler is properly set up.

10.4 Enter the amounts of toluene and styrene added to each of the samples (as calculated in section 10.1.4 of this method) into the calibration table and perform a calibration utilizing the external standard method of analysis.

10.5 At low concentrations the calibration should be close to linear. If a wide range of levels are to be determined it may be desirable to apply a nonlinear calibration to get the best fit.

*11.0 Procedure*

11.1 Place the vials in the tray of the headspace sampler. Enter the starting and ending positions through the console of the sampler. For unknown samples each is run in duplicate to minimize the effect of variations in crumb composition. If excessive variation is noted it may be desirable to run more than two of each sample.

11.2 Make sure the correct method is loaded on the Chemstation. Turn on the gas flows and light the FID flame.

11.3 Start the sequence on the Chemstation. Press the START button on the headspace unit. The samples will be automatically injected after equilibrating for 30 minutes in the oven. As each sample is completed the Chemstation will calculate and print out the results as percent toluene and styrene in the crumb based on the dry weight of rubber.

*12.0 Data Analysis and Calculations*

12.1 For each set of duplicate samples calculate the average of the measured concentration of toluene and styrene. If more than two replicates of each sample are run calculate the average over all replicates.

12.2 For each sample correct the measured amounts of toluene and styrene using the following equation:

Corrected Result = $C_m/R$

Where:

$C_m$ = Average measured concentration for that compound.

R = Recovery efficiency for that compound in the same sample type (see section 9.4 of this method)

12.3 Report the recovery efficiency (R) and the corrected results of toluene and styrene for each sample.

*13.0 Method Performance*

13.1 This method can be very sensitive and reproducible. The actual performance depends largely on the exact nature of the samples being analyzed. Actual performance must be determined by each laboratory for each sample type.

13.2 The main source of variation is the actual variation in the composition of non homogeneous crumb in a stripping system and the small sample sizes employed here. It therefore is the responsibility of each laboratory to determine the optimum number of replicates of each sample required to obtain accurate results.

*14.0 Pollution Prevention*

14.1 Samples should be kept sealed when possible in order to prevent evaporation of hydrocarbons.

14.2 When drying of samples is required it should be done in an oven which vents into a suitable device that can trap the hydrocarbons released.

14.3 Dispose of samples as described in section 15.

*15.0 Waste Management*

15.1 Excess stripper crumb and water as well as the contents of the used sample vials should be properly disposed of in accordance with local and federal regulations.

15.2 Preferably this will be accomplished by having a system of returning unused and spent samples to the process.

*16.0 References*

16.1 ''HP 7694 Headspace Sampler—Operating and Service Manual'', Hewlett-Packard Company, publication number G1290–90310, June 1993.

METHOD 313B—THE DETERMINATION OF RESIDUAL HYDROCARBON IN SOLUTION POLYMERS BY CAPILLARY GAS CHROMATOGRAPHY

*1.0 Scope*

1.1 This method is applicable to solution polymerized polybutadiene (PBD).

1.2 This method quantitatively determines n-hexane in wet crumb polymer at levels from 0.08 to 0.15% by weight.

1.3 This method may be extended to the determination of other hydrocarbons in solution produced polymers with proper experimentation and documentation.

*2.0 Principle of Method*

2.1 A weighed sample of polymer is dissolved in chloroform and the cement is coagulated with an isopropyl alcohol solution containing a specific amount of alpha-methyl styrene (AMS) as the internal standard. The extract of this coagulation is then injected into a gas chromatograph and separated into individual components. Quantification is achieved by the method of internal standardization.

*3.0 Definitions*

3.1 The definitions are included in the text as needed.

*4.0 Interferences* [Reserved]

*5.0 Safety*

5.1 This method may involve hazardous materials, operations, and equipment. This method does not purport to address all of the safety problems associated with its use. It is the responsibility of the user of this method to establish appropriate safety and health practices and determine the applicability of regulatory limitations prior to use.

*6.0 Equipment and Supplies*

6.1 Analytical balance, 160 g capacity, 0.1 mg resolution

6.2 Bottles, 2-oz capacity with poly-cap screw lids

6.3 Mechanical shaker

6.4 Syringe, 10–ul capacity

6.5 Syringe, 2.5–ml capacity, with 22 gauge 1.25 inch needle, PP/PE material, disposable

6.6 Gas chromatograph, Hewlett-Packard model 5890, or equivalent, configured with FID, split injector packed with silanized glass wool.

6.6.1 Establish the following gas chromatographic conditions, and allow the system to thoroughly equilibrate before use.

6.6.2 Injector parameters:

Injection technique = Split
Injector split flow = 86 ml/min
Injector temperature = 225 deg C

6.6.3 Oven temperature program:
Initial temperature = 40 deg C
Initial time = 6 min
Program rate = 10 deg C/min
Upper limit temperature = 175 deg C
Upper limit interval = 10 min

6.6.4 Detector parameters:
Detector temperature = 300 deg C
Hydrogen flow = 30 ml/min
Air flow = 350 ml/min
Nitrogen make up = 26 ml/min

6.7 Gas chromatographic columns: SE–54 (5%-phenyl) (1%-vinyl)-methylpolysiloxane, 15 M × 0.53 mm ID with a 1.2 micron film thickness, and a Carbowax 20M (polyethylene glycol), 15 M × 0.53 mm ID with a 1.2 micron film thickness.

6.7.1 Column assembly: using a 0.53 mm ID butt connector union, join the 15 M × 0.53 mm SE–54 column to the 15 M × 0.53 mm Carbowax 20M. The SE–54 column will be inserted into the injector and the Carbowax 20M inserted into the detector after they have been joined.

6.7.2 Column parameters:

Helium flow = 2.8 ml/min
Helium headpressure = 2 psig

6.8 Centrifuge

6.9 Data collection system, Hewlett-Packard Model 3396, or equivalent

6.10 Pipet, 25–ml capacity, automatic dispensing, and 2 liter reservoir

6.11 Pipet, 2–ml capacity, volumetric delivery, class A

6.12 Flasks, 100 and 1000-ml capacity, volumetric, class A

6.13 Vial, serum, 50-ml capacity, red rubber septa and crimp ring seals

6.14 Sample collection basket fabricated out of wire mesh to allow for drainage

*7.0 Chemicals and Reagents*

CHEMICALS:

7.1 alpha-Methyl Styrene, C9H10, 99 + % purity, CAS 98–83–9

7.2 n-Hexane, C6H14, 99 + % purity, CAS 110–54–3

7.3 Isopropyl alcohol, C3H8O 99.5 + % purity, reagent grade, CAS 67–63–0

7.4 Chloroform, CHCl3, 99% min., CAS 67–66–3

REAGENTS:

7.5 Internal Standard Stock Solution: 10 mg/25 ml AMS in isopropyl alcohol.

7.5.1 Into a 25-ml beaker, weigh 0.4 g of AMS to the nearest 0.1 mg.

7.5.2 Quantitatively transfer this AMS into a 1-L volumetric flask. Dilute to the mark with isopropyl alcohol.

7.5.3 Transfer this solution to the automatic dispensing pipet reservoir. This will be labeled the AMS STOCK SOLUTION.

7.6 n-Hexane Stock Solution: 13mg/2ml hexane in isopropyl alcohol.

7.6.1 Into a 100-ml volumetric flask, weigh 0.65 g of n-hexane to the nearest 0.1 mg.

7.6.2 Dilute to the mark with isopropyl alcohol. This solution will be labeled the n-HEXANE STOCK SOLUTION.

*8.0 Sample Collection, Preservation and Storage*

8.1 A sampling device similar to Figure 1 is used to collect a non-vented crumb rubber sample at a location that is after the stripping operation but before the sample is exposed to the atmosphere.

8.2 The crumb rubber is allowed to cool before opening the sampling device and removing the sample.

8.3 The sampling device is opened and the crumb rubber sample is collected in the sampling basket.

8.4 One pound of crumb rubber sample is placed into a polyethylene bag. The bag is labeled with the time, date and sample location.

8.5 The sample should be delivered to the laboratory for testing within one hour of sampling.

8.6 Laboratory testing will be done within 3 hours of the sampling time.

8.7 No special storage conditions are required unless the storage time exceeds 3 hours in which case refrigeration of the samples is recommended.

*9.0 Quality Control*

9.1 For each sample type, 12 samples shall be obtained from the process for the recovery study. Half of the vials and caps shall be tared, labeled ''spiked'', and numbered 1 through 6. The other vials shall be labeled ''unspiked'' and need not be tared, but are also numbered 1 through 6.

9.2 Determine the % moisture content of the crumb sample. After determining the % moisture content, the correction factor for calculating the dry crumb weight can be determined by using the equation in section 12.2 of this method.

9.3 Run the spiked and unspiked samples in the normal manner. Record the concentrations of the n-hexane content of the mixed hexane reported for each pair of spiked and unspiked samples.

9.4 For the recovery study, each sample of crumb shall be dissolved in chloroform containing a known amount of mixed hexane solvent.

9.5 For each hydrocarbon, calculate the recovery efficiency (R) using the following equations:

$M_r = M_s - M_u$

$R = M_r/S$

Where:

$M_u$ = Measured amount of compound in the unspiked sample

$M_s$ = Measured amount of compound in the spiked sample

$M_r$ = Measured amount of the spiked compound

S = Amount of compound added to the spiked sample

R = Fraction of spiked compound recovered

9.6 Normally a value of R between 0.70 and 1.30 is acceptable.

9.7 R is used to correct all reported results for each compound by dividing the measured results of each compound by the R for that compound for the same sample type.

*10.0 Calibration*

10.1 Using the AMS STOCK SOLUTION equipped with the automatic dispensing pipet (7.5.3 of this method), transfer 25.0 ml of the internal standard solution into an uncapped 50-ml serum vial.

10.2 Using a 2.0 ml volumetric pipet, quantitatively transfer 2.0 ml of the n-HEXANE STOCK SOLUTION (7.6.2 of this method) into the 50-ml serum vial and cap. This solution will be labeled the CALIBRATION SOLUTION.

10.3 Using the conditions prescribed (6.6 of this method), inject 1 µl of the supernate.

10.4 Obtain the peak areas and calculate the response factor as described in the calculations section (12.1 of this method).

*11.0 Procedure*

11.1 Determination of Dry Polymer Weight

11.1.1 Remove wet crumb from the polyethylene bag and place on paper towels to absorb excess surface moisture.

11.1.2 Cut small slices or cubes from the center of the crumb sample to improve sample uniformity and further eliminate surface moisture.

11.1.3 A suitable gravimetric measurement should be made on a sample of this wet crumb to determine the correction factor needed to calculate the dry polymer weight.

11.2 Determination of n-Hexane in Wet Crumb

11.2.1 Remove wet crumb from the polyethylene bag and place on paper towels to absorb excess surface moisture.

11.2.2 Cut small slices or cubes from the center of the crumb sample to improve sample uniformity and further eliminate surface moisture.

11.2.3 Into a tared 2 oz bottle, weigh 1.5 g of wet polymer to the nearest 0.1 mg.

11.2.4 Add 25 ml of chloroform to the 2 oz bottle and cap.

11.2.5 Using a mechanical shaker, shake the bottle until the polymer dissolves.

11.2.6 Using the autodispensing pipet, add 25.0 ml of the AMS STOCK SOLUTION (7.5.3 of this method) to the dissolved polymer solution and cap.

11.2.7 Using a mechanical shaker, shake the bottle for 10 minutes to coagulate the dissolved polymer.

11.2.8 Centrifuge the sample for 3 minutes at 2000 rpm.

11.2.9 Using the conditions prescribed (6.6 of this method), chromatograph 1 µl of the supernate.

11.2.10 Obtain the peak areas and calculate the concentration of the component of interest as described in the calculations (12.2 of this method).

*12.0 Calculations*

12.1 Calibration:

$RF_x = (W_x \times A_{is}) / (W_{is} \times A_x)$

Where:

$RF_x$ = the relative response factor for n-hexane

$W_x$ = the weight (g) of n-hexane in the CALIBRATION SOLUTION

$A_{is}$ = the area of AMS

$W_{is}$ = the weight (g) of AMS in the CALIBRATION SOLUTION

$A_x$ = the area of n-hexane

12.2 Procedure:

12.2.1 Correction Factor for calculating dry crumb weight.

F = 1—(% moisture / 100)

Where:

F = Correction factor for calculating dry crumb weight

% moisture determined by appropriate method

12.2.2 Moisture adjustment for chromatographic determination.

$W_s = F \times W_c$

Where:

$W_s$ = the weight (g) of the dry polymer corrected for moisture

F = Correction factor for calculating dry crumb weight

$W_c$ = the weight (g) of the wet crumb in section 9.6

12.2.3 Concentration (ppm) of hexane in the wet crumb.

$ppm_x = (A_x * RF_x * W_{is} * 10000) / (A_{is} * W_s)$

Where:

$ppm_x$ = parts per million of n-hexane in the polymer

$A_x$ = the area of n-hexane

$RF_x$ = the relative response factor for n-hexane

$W_{is}$ = the weight (g) of AMS in the sample solution

$A_{is}$ = the area of AMS

$W_s$ = the weight (g) of the dry polymer corrected for moisture

*13.0 Method Performance*

13.1 Precision for the method was determined at the 0.08% level.

The standard deviation was 0.01 and the percent relative standard deviation (RSD) was 16.3 % with five degrees of freedom.

*14.0 Waste Generation*

14.1 Waste generation should be minimized where possible.

*15.0 Waste Management*

15.1 Discard liquid chemical waste into the chemical waste drum.

15.2 Discard polymer waste into the polymer waste container.

*16.0 References*

16.1 This method is based on Goodyear Chemical Division Test Method E–964.

## METHOD 315—DETERMINATION OF PARTICULATE AND METHYLENE CHLORIDE EXTRACTABLE MATTER (MCEM) FROM SELECTED SOURCES AT PRIMARY ALUMINUM PRODUCTION FACILITIES

NOTE: This method does not include all of the specifications (e.g., equipment and supplies) and procedures (e.g., sampling and analytical) essential to its performance. Some material is incorporated by reference from other methods in this part. Therefore, to obtain reliable results, persons using this method should have a thorough knowledge of at least the following additional test methods: Method 1, Method 2, Method 3, and Method 5 of 40 CFR part 60, appendix A.

*1.0 Scope and Application*

1.1 Analytes. Particulate matter (PM). No CAS number assigned. Methylene chloride extractable matter (MCEM). No CAS number assigned.

1.2 Applicability. This method is applicable for the simultaneous determination of PM and MCEM when specified in an applicable regulation. This method was developed by consensus with the Aluminum Association and the U.S. Environmental Protection Agency (EPA) and has limited precision estimates for MCEM; it should have similar precision to Method 5 for PM in 40 CFR part 60, appendix A since the procedures are similar for PM.

1.3 Data quality objectives. Adherence to the requirements of this method will enhance the quality of the data obtained from air pollutant sampling methods.

*2.0 Summary of Method*

Particulate matter and MCEM are withdrawn isokinetically from the source. PM is collected on a glass fiber filter maintained at a temperature in the range of 120 ±14 °C (248 ±25 °F) or such other temperature as specified by an applicable subpart of the standards or approved by the Administrator for a particular application. The PM mass, which includes any material that condenses on the

probe and is subsequently removed in an acetone rinse or on the filter at or above the filtration temperature, is determined gravimetrically after removal of uncombined water. MCEM is then determined by adding a methylene chloride rinse of the probe and filter holder, extracting the condensable hydrocarbons collected in the impinger water, adding an acetone rinse followed by a methylene chloride rinse of the sampling train components after the filter and before the silica gel impinger, and determining residue gravimetrically after evaporating the solvents.

*3.0 Definitions* [Reserved]

*4.0 Interferences* [Reserved]

*5.0 Safety*

This method may involve hazardous materials, operations, and equipment. This method does not purport to address all of the safety problems associated with its use. It is the responsibility of the user of this method to establish appropriate safety and health practices and determine the applicability of regulatory limitations prior to performing this test method.

*6.0 Equipment and Supplies*

NOTE: Mention of trade names or specific products does not constitute endorsement by the EPA.

6.1 Sample collection. The following items are required for sample collection:

6.1.1 Sampling train. A schematic of the sampling train used in this method is shown in Figure 5–1, Method 5, 40 CFR part 60, appendix A–3. Complete construction details are given in APTD–0581 (Reference 2 in section 17.0 of this method); commercial models of this train are also available. For changes from APTD–0581 and for allowable modifications of the train shown in Figure 5–1, Method 5, 40 CFR part 60, appendix A–3, see the following subsections.

NOTE: The operating and maintenance procedures for the sampling train are described in APTD–0576 (Reference 3 in section 17.0 of this method). Since correct usage is important in obtaining valid results, all users should read APTD–0576 and adopt the operating and maintenance procedures outlined in it, unless otherwise specified herein. Alternative mercury-free thermometers may be used if the thermometers are, at a minimum, equivalent in terms of performance or suitably effective for the specific temperature measurement application. The use of grease for sealing sampling train components is not recommended because many greases are soluble in methylene chloride. The sampling train consists of the following components:

6.1.1.1 Probe nozzle. Glass or glass lined with sharp, tapered leading edge. The angle of taper shall be ≤30 °, and the taper shall be on the outside to preserve a constant internal diameter. The probe nozzle shall be of the button-hook or elbow design, unless otherwise specified by the Administrator. Other materials of construction may be used, subject to the approval of the Administrator. A range of nozzle sizes suitable for isokinetic sampling should be available. Typical nozzle sizes range from 0.32 to 1.27 cm (⅛ to ½ in.) inside diameter (ID) in increments of 0.16 cm (1⁄16 in.). Larger nozzle sizes are also available if higher volume sampling trains are used. Each nozzle shall be calibrated according to the procedures outlined in section 10.0 of this method.

6.1.1.2 Probe liner. Borosilicate or quartz glass tubing with a heating system capable of maintaining a probe gas temperature at the exit end during sampling of 120 ±14 °C (248 ±25 °F), or such other temperature as specified by an applicable subpart of the standards or approved by the Administrator for a particular application. Because the actual temperature at the outlet of the probe is not usually monitored during sampling, probes constructed according to APTD–0581 and using the calibration curves of APTD–0576 (or calibrated according to the procedure outlined in APTD–0576) will be considered acceptable. Either borosilicate or quartz glass probe liners may be used for stack temperatures up to about 480 °C (900 °F); quartz liners shall be used for temperatures between 480 and 900 °C (900 and 1,650 °F). Both types of liners may be used at higher temperatures than specified for short periods of time, subject to the approval of the Administrator. The softening temperature for borosilicate glass is 820 °C (1,500 °F) and for quartz glass it is 1,500 °C (2,700 °F).

6.1.1.3 Pitot tube. Type S, as described in section 6.1 of Method 2, 40 CFR part 60, appendix A, or other device approved by the Administrator. The pitot tube shall be attached to the probe (as shown in Figure 5–1 of Method 5, 40 CFR part 60, appendix A) to allow constant monitoring of the stack gas velocity. The impact (high pressure) opening plane of the pitot tube shall be even with or above the nozzle entry plane (see Method 2, Figure 2–6b, 40 CFR part 60, appendix A) during sampling. The Type S pitot tube assembly shall have a known coefficient, determined as outlined in section 10.0 of Method 2, 40 CFR part 60, appendix A.

6.1.1.4 Differential pressure gauge. Inclined manometer or equivalent device (two), as described in section 6.2 of Method 2, 40 CFR part 60, appendix A. One manometer shall be used for velocity head (Dp) readings, and the other, for orifice differential pressure readings.

6.1.1.5 Filter holder. Borosilicate glass, with a glass frit filter support and a silicone rubber gasket. The holder design shall provide a positive seal against leakage from the

outside or around the filter. The holder shall be attached immediately at the outlet of the probe (or cyclone, if used).

6.1.1.6 Filter heating system. Any heating system capable of maintaining a temperature around the filter holder of 120 ±14 °C (248 ±25 °F) during sampling, or such other temperature as specified by an applicable subpart of the standards or approved by the Administrator for a particular application. Alternatively, the tester may opt to operate the equipment at a temperature lower than that specified. A temperature gauge capable of measuring temperature to within 3 °C (5.4 °F) shall be installed so that the temperature around the filter holder can be regulated and monitored during sampling. Heating systems other than the one shown in APTD–0581 may be used.

6.1.1.7 Temperature sensor. A temperature sensor capable of measuring temperature to within ±3 °C (5.4 °F) shall be installed so that the sensing tip of the temperature sensor is in direct contact with the sample gas, and the temperature around the filter holder can be regulated and monitored during sampling.

6.1.1.8 Condenser. The following system shall be used to determine the stack gas moisture content: four glass impingers connected in series with leak-free ground glass fittings. The first, third, and fourth impingers shall be of the Greenburg-Smith design, modified by replacing the tip with a 1.3 cm (1/2 in.) ID glass tube extending to about 1.3 cm (1/2 in.) from the bottom of the flask. The second impinger shall be of the Greenburg-Smith design with the standard tip. The first and second impingers shall contain known quantities of water (section 8.3.1 of this method), the third shall be empty, and the fourth shall contain a known weight of silica gel or equivalent desiccant. A temperature sensor capable of measuring temperature to within 1 °C (2 °F) shall be placed at the outlet of the fourth impinger for monitoring.

6.1.1.9 Metering system. Vacuum gauge, leak-free pump, temperature sensors capable of measuring temperature to within 3 °C (5.4 °F), dry gas meter (DGM) capable of measuring volume to within 2 percent, and related equipment, as shown in Figure 5–1 of Method 5, 40 CFR part 60, appendix A. Other metering systems capable of maintaining sampling rates within 10 percent of isokinetic and of determining sample volumes to within 2 percent may be used, subject to the approval of the Administrator. When the metering system is used in conjunction with a pitot tube, the system shall allow periodic checks of isokinetic rates.

6.1.1.10 Sampling trains using metering systems designed for higher flow rates than that described in APTD–0581 or APTD–0576 may be used provided that the specifications of this method are met.

6.1.2 Barometer. Mercury, aneroid, or other barometer capable of measuring atmospheric pressure to within 2.5 mm (0.1 in.) Hg.

NOTE: The barometric reading may be obtained from a nearby National Weather Service station. In this case, the station value (which is the absolute barometric pressure) shall be requested and an adjustment for elevation differences between the weather station and sampling point shall be made at a rate of minus 2.5 mm (0.1 in) Hg per 30 m (100 ft) elevation increase or plus 2.5 mm (0.1 in) Hg per 30 m (100 ft) elevation decrease.

6.1.3 Gas density determination equipment. Temperature sensor and pressure gauge, as described in sections 6.3 and 6.4 of Method 2, 40 CFR part 60, appendix A, and gas analyzer, if necessary, as described in Method 3, 40 CFR part 60, appendix A. The temperature sensor shall, preferably, be permanently attached to the pitot tube or sampling probe in a fixed configuration, such that the tip of the sensor extends beyond the leading edge of the probe sheath and does not touch any metal. Alternatively, the sensor may be attached just prior to use in the field. Note, however, that if the temperature sensor is attached in the field, the sensor must be placed in an interference-free arrangement with respect to the Type S pitot tube openings (see Method 2, Figure 2–4, 40 CFR part 60, appendix A). As a second alternative, if a difference of not more than 1 percent in the average velocity measurement is to be introduced, the temperature sensor need not be attached to the probe or pitot tube. (This alternative is subject to the approval of the Administrator.)

6.2 Sample recovery. The following items are required for sample recovery:

6.2.1 Probe-liner and probe-nozzle brushes. Nylon or Teflon® bristle brushes with stainless steel wire handles. The probe brush shall have extensions (at least as long as the probe) constructed of stainless steel, nylon, Teflon®, or similarly inert material. The brushes shall be properly sized and shaped to brush out the probe liner and nozzle.

6.2.2 Wash bottles. Glass wash bottles are recommended. Polyethylene or tetrafluoroethylene (TFE) wash bottles may be used, but they may introduce a positive bias due to contamination from the bottle. It is recommended that acetone not be stored in polyethylene or TFE bottles for longer than a month.

6.2.3 Glass sample storage containers. Chemically resistant, borosilicate glass bottles, for acetone and methylene chloride washes and impinger water, 500 ml or 1,000 ml. Screw-cap liners shall either be rubber-backed Teflon® or shall be constructed so as to be leak-free and resistant to chemical attack by acetone or methylene chloride. (Narrow-mouth glass bottles have been found to

be less prone to leakage.) Alternatively, polyethylene bottles may be used.

6.2.4 Petri dishes. For filter samples, glass, unless otherwise specified by the Administrator.

6.2.5 Graduated cylinder and/or balance. To measure condensed water, acetone wash and methylene chloride wash used during field recovery of the samples, to within 1 ml or 1 g. Graduated cylinders shall have subdivisions no greater than 2 ml. Most laboratory balances are capable of weighing to the nearest 0.5 g or less. Any such balance is suitable for use here and in section 6.3.4 of this method.

6.2.6 Plastic storage containers. Air-tight containers to store silica gel.

6.2.7 Funnel and rubber policeman. To aid in transfer of silica gel to container; not necessary if silica gel is weighed in the field.

6.2.8 Funnel. Glass or polyethylene, to aid in sample recovery.

6.3 Sample analysis. The following equipment is required for sample analysis:

6.3.1 Glass or Teflon® weighing dishes.

6.3.2 Desiccator. It is recommended that fresh desiccant be used to minimize the chance for positive bias due to absorption of organic material during drying.

6.3.3 Analytical balance. To measure to within 0.1 mg.

6.3.4 Balance. To measure to within 0.5 g.

6.3.5 Beakers. 250 ml.

6.3.6 Hygrometer. To measure the relative humidity of the laboratory environment.

6.3.7 Temperature sensor. To measure the temperature of the laboratory environment.

6.3.8 Buchner fritted funnel. 30 ml size, fine (<50 micron)-porosity fritted glass.

6.3.9 Pressure filtration apparatus.

6.3.10 Aluminum dish. Flat bottom, smooth sides, and flanged top, 18 mm deep and with an inside diameter of approximately 60 mm.

*7.0 Reagents and Standards*

7.1 Sample collection. The following reagents are required for sample collection:

7.1.1 Filters. Glass fiber filters, without organic binder, exhibiting at least 99.95 percent efficiency (<0.05 percent penetration) on 0.3 micron dioctyl phthalate smoke particles. The filter efficiency test shall be conducted in accordance with ASTM Method D 2986–95A (incorporated by reference in §63.841 of this part). Test data from the supplier's quality control program are sufficient for this purpose. In sources containing $S0_2$ or $S0_3$, the filter material must be of a type that is unreactive to $S0_2$ or $S0_3$. Reference 10 in section 17.0 of this method may be used to select the appropriate filter.

7.1.2 Silica gel. Indicating type, 6 to 16 mesh. If previously used, dry at 175 °C (350 °F) for 2 hours. New silica gel may be used as received. Alternatively, other types of desiccants (equivalent or better) may be used, subject to the approval of the Administrator.

7.1.3 Water. When analysis of the material caught in the impingers is required, deionized distilled water shall be used. Run blanks prior to field use to eliminate a high blank on test samples.

7.1.4 Crushed ice.

7.1.5 Stopcock grease. Acetone-insoluble, heat-stable silicone grease. This is not necessary if screw-on connectors with Teflon'' sleeves, or similar, are used. Alternatively, other types of stopcock grease may be used, subject to the approval of the Administrator. [Caution: Many stopcock greases are methylene chloride-soluble. Use sparingly and carefully remove prior to recovery to prevent contamination of the MCEM analysis.]

7.2 Sample recovery. The following reagents are required for sample recovery:

7.2.1 Acetone. Acetone with blank values <1 ppm, by weight residue, is required. Acetone blanks may be run prior to field use, and only acetone with low blank values may be used. In no case shall a blank value of greater than 1E–06 of the weight of acetone used be subtracted from the sample weight.

NOTE: This is more restrictive than Method 5, 40 CFR part 60, appendix A. At least one vendor (Supelco Incorporated located in Bellefonte, Pennsylvania) lists <1 mg/l as residue for its Environmental Analysis Solvents.

7.2.2 Methylene chloride. Methylene chloride with a blank value <1.5 ppm, by weight, residue. Methylene chloride blanks may be run prior to field use, and only methylene chloride with low blank values may be used. In no case shall a blank value of greater than 1.6E–06 of the weight of methylene chloride used be subtracted from the sample weight.

NOTE: A least one vendor quotes <1 mg/l for Environmental Analysis Solvents-grade methylene chloride.

7.3 Sample analysis. The following reagents are required for sample analysis:

7.3.1 Acetone. Same as in section 7.2.1 of this method.

7.3.2 Desiccant. Anhydrous calcium sulfate, indicating type. Alternatively, other types of desiccants may be used, subject to the approval of the Administrator.

7.3.3 Methylene chloride. Same as in section 7.2.2 of this method.

*8.0 Sample Collection, Preservation, Storage, and Transport*

NOTE: The complexity of this method is such that, in order to obtain reliable results, testers should be trained and experienced with the test procedures.

8.1 Pretest preparation. It is suggested that sampling equipment be maintained according to the procedures described in

APTD–0576. Alternative mercury-free thermometers may be used if the thermometers are at a minimum equivalent in terms of performance or suitably effective for the specific temperature measurement application.

8.1.1 Weigh several 200 g to 300 g portions of silica gel in airtight containers to the nearest 0.5 g. Record on each container the total weight of the silica gel plus container. As an alternative, the silica gel need not be preweighed but may be weighed directly in its impinger or sampling holder just prior to train assembly.

8.1.2 A batch of glass fiber filters, no more than 50 at a time, should placed in a soxhlet extraction apparatus and extracted using methylene chloride for at least 16 hours. After extraction, check filters visually against light for irregularities, flaws, or pinhole leaks. Label the shipping containers (glass or plastic petri dishes), and keep the filters in these containers at all times except during sampling and weighing.

8.1.3 Desiccate the filters at 20 ±5.6 °C (68 ±10 °F) and ambient pressure for at least 24 hours and weigh at intervals of at least 6 hours to a constant weight, i.e., <0.5 mg change from previous weighing; record results to the nearest 0.1 mg. During each weighing the filter must not be exposed to the laboratory atmosphere for longer than 2 minutes and a relative humidity above 50 percent. Alternatively (unless otherwise specified by the Administrator), the filters may be oven-dried at 104 °C (220 °F) for 2 to 3 hours, desiccated for 2 hours, and weighed. Procedures other than those described, which account for relative humidity effects, may be used, subject to the approval of the Administrator.

8.2 Preliminary determinations.

8.2.1 Select the sampling site and the minimum number of sampling points according to Method 1, 40 CFR part 60, appendix A or as specified by the Administrator. Determine the stack pressure, temperature, and the range of velocity heads using Method 2, 40 CFR part 60, appendix A; it is recommended that a leak check of the pitot lines (see section 8.1 of Method 2, 40 CFR part 60, appendix A) be performed. Determine the moisture content using Approximation Method 4 (section 1.2 of Method 4, 40 CFR part 60, appendix A) or its alternatives to make isokinetic sampling rate settings. Determine the stack gas dry molecular weight, as described in section 8.6 of Method 2, 40 CFR part 60, appendix A; if integrated Method 3 sampling is used for molecular weight determination, the integrated bag sample shall be taken simultaneously with, and for the same total length of time as, the particulate sample run.

8.2.2 Select a nozzle size based on the range of velocity heads such that it is not necessary to change the nozzle size in order to maintain isokinetic sampling rates. During the run, do not change the nozzle size. Ensure that the proper differential pressure gauge is chosen for the range of velocity heads encountered (see section 8.2 of Method 2, 40 CFR part 60, appendix A).

8.2.3 Select a suitable probe liner and probe length such that all traverse points can be sampled. For large stacks, consider sampling from opposite sides of the stack to reduce the required probe length.

8.2.4 Select a total sampling time greater than or equal to the minimum total sampling time specified in the test procedures for the specific industry such that: (1) The sampling time per point is not less than 2 minutes (or some greater time interval as specified by the Administrator); and (2) the sample volume taken (corrected to standard conditions) will exceed the required minimum total gas sample volume. The latter is based on an approximate average sampling rate.

8.2.5 The sampling time at each point shall be the same. It is recommended that the number of minutes sampled at each point be an integer or an integer plus one-half minute, in order to eliminate timekeeping errors.

8.2.6 In some circumstances (e.g., batch cycles), it may be necessary to sample for shorter times at the traverse points and to obtain smaller gas sample volumes. In these cases, the Administrator's approval must first be obtained.

8.3 Preparation of sampling train.

8.3.1 During preparation and assembly of the sampling train, keep all openings where contamination can occur covered until just prior to assembly or until sampling is about to begin. Place 100 ml of water in each of the first two impingers, leave the third impinger empty, and transfer approximately 200 to 300 g of preweighed silica gel from its container to the fourth impinger. More silica gel may be used, but care should be taken to ensure that it is not entrained and carried out from the impinger during sampling. Place the container in a clean place for later use in the sample recovery. Alternatively, the weight of the silica gel plus impinger may be determined to the nearest 0.5 g and recorded.

8.3.2 Using a tweezer or clean disposable surgical gloves, place a labeled (identified) and weighed filter in the filter holder. Be sure that the filter is properly centered and the gasket properly placed so as to prevent the sample gas stream from circumventing the filter. Check the filter for tears after assembly is completed.

8.3.3 When glass liners are used, install the selected nozzle using a Viton A 0-ring when stack temperatures are less than 260 °C (500 °F) and an asbestos string gasket when temperatures are higher. See APTD–0576 for details. Mark the probe with heat-resistant tape or by some other method to denote the

proper distance into the stack or duct for each sampling point.

8.3.4 Set up the train as in Figure 5-1 of Method 5, 40 CFR part 60, appendix A, using (if necessary) a very light coat of silicone grease on all ground glass joints, greasing only the outer portion (see APTD–0576) to avoid possibility of contamination by the silicone grease. Subject to the approval of the Administrator, a glass cyclone may be used between the probe and filter holder when the total particulate catch is expected to exceed 100 mg or when water droplets are present in the stack gas.

8.3.5 Place crushed ice around the impingers.

8.4 Leak-check procedures.

8.4.1 Leak check of metering system shown in Figure 5-1 of Method 5, 40 CFR part 60, appendix A. That portion of the sampling train from the pump to the orifice meter should be leak-checked prior to initial use and after each shipment. Leakage after the pump will result in less volume being recorded than is actually sampled. The following procedure is suggested (see Figure 5–2 of Method 5, 40 CFR part 60, appendix A): Close the main valve on the meter box. Insert a one-hole rubber stopper with rubber tubing attached into the orifice exhaust pipe. Disconnect and vent the low side of the orifice manometer. Close off the low side orifice tap. Pressurize the system to 13 to 18 cm (5 to 7 in.) water column by blowing into the rubber tubing. Pinch off the tubing, and observe the manometer for 1 minute. A loss of pressure on the manometer indicates a leak in the meter box; leaks, if present, must be corrected.

8.4.2 Pretest leak check. A pretest leak-check is recommended but not required. If the pretest leak-check is conducted, the following procedure should be used.

8.4.2.1 After the sampling train has been assembled, turn on and set the filter and probe heating systems to the desired operating temperatures. Allow time for the temperatures to stabilize. If a Viton A 0-ring or other leak-free connection is used in assembling the probe nozzle to the probe liner, leak-check the train at the sampling site by plugging the nozzle and pulling a 380 mm (15 in.) Hg vacuum.

NOTE: A lower vacuum may be used, provided that it is not exceeded during the test.

8.4.2.2 If an asbestos string is used, do not connect the probe to the train during the leak check. Instead, leak-check the train by first plugging the inlet to the filter holder (cyclone, if applicable) and pulling a 380 mm (15 in.) Hg vacuum. (See NOTE in section 8.4.2.1 of this method). Then connect the probe to the train and perform the leak check at approximately 25 mm (1 in.) Hg vacuum; alternatively, the probe may be leak-checked with the rest of the sampling train, in one step, at 380 mm (15 in.) Hg vacuum. Leakage rates in excess of 4 percent of the average sampling rate or 0.00057 $m^3$/min (0.02 cfm), whichever is less, are unacceptable.

8.4.2.3 The following leak check instructions for the sampling train described in APTD–0576 and APTD–0581 may be helpful. Start the pump with the bypass valve fully open and the coarse adjust valve completely closed. Partially open the coarse adjust valve and slowly close the bypass valve until the desired vacuum is reached. *Do not* reverse the direction of the bypass valve, as this will cause water to back up into the filter holder. If the desired vacuum is exceeded, either leak-check at this higher vacuum or end the leak check as shown below and start over.

8.4.2.4 When the leak check is completed, first slowly remove the plug from the inlet to the probe, filter holder, or cyclone (if applicable) and immediately turn off the vacuum pump. This prevents the water in the impingers from being forced backward into the filter holder and the silica gel from being entrained backward into the third impinger.

8.4.3 Leak checks during sample run. If, during the sampling run, a component (e.g., filter assembly or impinger) change becomes necessary, a leak check shall be conducted immediately before the change is made. The leak check shall be done according to the procedure outlined in section 8.4.2 of this method, except that it shall be done at a vacuum equal to or greater than the maximum value recorded up to that point in the test. If the leakage rate is found to be no greater than 0.00057 $m^3$/min (0.02 cfm) or 4 percent of the average sampling rate (whichever is less), the results are acceptable, and no correction will need to be applied to the total volume of dry gas metered; if, however, a higher leakage rate is obtained, either record the leakage rate and plan to correct the sample volume as shown in section 12.3 of this method or void the sample run.

NOTE: Immediately after component changes, leak checks are optional; if such leak checks are done, the procedure outlined in section 8.4.2 of this method should be used.

8.4.4 Post-test leak check. A leak check is mandatory at the conclusion of each sampling run. The leak check shall be performed in accordance with the procedures outlined in section 8.4.2 of this method, except that it shall be conducted at a vacuum equal to or greater than the maximum value reached during the sampling run. If the leakage rate is found to be no greater than 0.00057 $m^3$/min (0.02 cfm) or 4 percent of the average sampling rate (whichever is less), the results are acceptable, and no correction need be applied to the total volume of dry gas metered. If, however, a higher leakage rate is obtained, either record the leakage rate and correct

the sample volume, as shown in section 12.4 of this method, or void the sampling run.

8.5 Sampling train operation. During the sampling run, maintain an isokinetic sampling rate (within 10 percent of true isokinetic unless otherwise specified by the Administrator) and a temperature around the filter of 120 14 °C (248 25 °F), or such other temperature as specified by an applicable subpart of the standards or approved by the Administrator.

8.5.1 For each run, record the data required on a data sheet such as the one shown in Figure 5–2 of Method 5, 40 CFR part 60, appendix A. Be sure to record the initial reading. Record the DGM readings at the beginning and end of each sampling time increment, when changes in flow rates are made, before and after each leak-check, and when sampling is halted. Take other readings indicated by Figure 5–2 of Method 5, 40 CFR part 60, appendix A at least once at each sample point during each time increment and additional readings when significant changes (20 percent variation in velocity head readings) necessitate additional adjustments in flow rate. Level and zero the manometer. Because the manometer level and zero may drift due to vibrations and temperature changes, make periodic checks during the traverse.

8.5.2 Clean the portholes prior to the test run to minimize the chance of sampling deposited material. To begin sampling, remove the nozzle cap and verify that the filter and probe heating systems are up to temperature and that the pitot tube and probe are properly positioned. Position the nozzle at the first traverse point with the tip pointing directly into the gas stream. Immediately start the pump and adjust the flow to isokinetic conditions. Nomographs are available, which aid in the rapid adjustment of the isokinetic sampling rate without excessive computations. These nomographs are designed for use when the Type S pitot tube coefficient ($C_p$) is 0.85 # 0.02 and the stack gas equivalent density (dry molecular weight) is 29 ±4. APTD–0576 details the procedure for using the nomographs. If $C_p$ and $M_d$ are outside the above-stated ranges, do not use the nomographs unless appropriate steps (see Reference 7 in section 17.0 of this method) are taken to compensate for the deviations.

8.5.3 When the stack is under significant negative pressure (height of impinger stem), close the coarse adjust valve before inserting the probe into the stack to prevent water from backing into the filter holder. If necessary, the pump may be turned on with the coarse adjust valve closed.

8.5.4 When the probe is in position, block off the openings around the probe and porthole to prevent unrepresentative dilution of the gas stream.

8.5.5 Traverse the stack cross-section, as required by Method 1, 40 CFR part 60, appendix A or as specified by the Administrator, being careful not to bump the probe nozzle into the stack walls when sampling near the walls or when removing or inserting the probe through the portholes; this minimizes the chance of extracting deposited material.

8.5.6 During the test run, make periodic adjustments to keep the temperature around the filter holder at the proper level; add more ice and, if necessary, salt to maintain a temperature of less than 20 °C (68 °F) at the condenser/silica gel outlet. Also, periodically check the level and zero of the manometer.

8.5.7 If the pressure drop across the filter becomes too high, making isokinetic sampling difficult to maintain, the filter may be replaced in the midst of the sample run. It is recommended that another complete filter assembly be used rather than attempting to change the filter itself. Before a new filter assembly is installed, conduct a leak check (see section 8.4.3 of this method). The total PM weight shall include the summation of the filter assembly catches.

8.5.8 A single train shall be used for the entire sample run, except in cases where simultaneous sampling is required in two or more separate ducts or at two or more different locations within the same duct, or in cases where equipment failure necessitates a change of trains. In all other situations, the use of two or more trains will be subject to the approval of the Administrator.

NOTE: When two or more trains are used, separate analyses of the front-half and (if applicable) impinger catches from each train shall be performed, unless identical nozzle sizes were used in all trains, in which case the front-half catches from the individual trains may be combined (as may the impinger catches) and one analysis of the front-half catch and one analysis of the impinger catch may be performed.

8.5.9 At the end of the sample run, turn off the coarse adjust valve, remove the probe and nozzle from the stack, turn off the pump, record the final DGM reading, and then conduct a post-test leak check, as outlined in section 8.4.4 of this method. Also leak-check the pitot lines as described in section 8.1 of Method 2, 40 CFR part 60, appendix A. The lines must pass this leak check in order to validate the velocity head data.

8.6 Calculation of percent isokinetic. Calculate percent isokinetic (see Calculations, section 12.12 of this method) to determine whether a run was valid or another test run should be made. If there was difficulty in maintaining isokinetic rates because of source conditions, consult the Administrator for possible variance on the isokinetic rates.

8.7 Sample recovery.

8.7.1 Proper cleanup procedure begins as soon as the probe is removed from the stack at the end of the sampling period. Allow the probe to cool.

8.7.2 When the probe can be safely handled, wipe off all external PM near the tip of the probe nozzle and place a cap over it to prevent losing or gaining PM. Do not cap off the probe tip tightly while the sampling train is cooling down. This would create a vacuum in the filter holder, thus drawing water from the impingers into the filter holder.

8.7.3 Before moving the sample train to the cleanup site, remove the probe from the sample train, wipe off the silicone grease, and cap the open outlet of the probe. Be careful not to lose any condensate that might be present. Wipe off the silicone grease from the filter inlet where the probe was fastened and cap it. Remove the umbilical cord from the last impinger and cap the impinger. If a flexible line is used between the first impinger or condenser and the filter holder, disconnect the line at the filter holder and let any condensed water or liquid drain into the impingers or condenser. After wiping off the silicone grease, cap off the filter holder outlet and impinger inlet. Ground-glass stoppers, plastic caps, or serum caps may be used to close these openings.

8.7.4 Transfer the probe and filter-impinger assembly to the cleanup area. This area should be clean and protected from the wind so that the chances of contaminating or losing the sample will be minimized.

8.7.5 Save a portion of the acetone and methylene chloride used for cleanup as blanks. Take 200 ml of each solvent directly from the wash bottle being used and place it in glass sample containers labeled ''acetone blank'' and ''methylene chloride blank,'' respectively.

8.7.6 Inspect the train prior to and during disassembly and note any abnormal conditions. Treat the samples as follows:

8.7.6.1 Container No. 1. Carefully remove the filter from the filter holder, and place it in its identified petri dish container. Use a pair of tweezers and/or clean disposable surgical gloves to handle the filter. If it is necessary to fold the filter, do so such that the PM cake is inside the fold. Using a dry nylon bristle brush and/or a sharp-edged blade, carefully transfer to the petri dish any PM and/or filter fibers that adhere to the filter holder gasket. Seal the container.

8.7.6.2 Container No. 2. Taking care to see that dust on the outside of the probe or other exterior surfaces does not get into the sample, quantitatively recover PM or any condensate from the probe nozzle, probe fitting, probe liner, and front half of the filter holder by washing these components with acetone and placing the wash in a glass container. Perform the acetone rinse as follows:

8.7.6.2.1 Carefully remove the probe nozzle and clean the inside surface by rinsing with acetone from a wash bottle and brushing with a nylon bristle brush. Brush until the acetone rinse shows no visible particles, after which make a final rinse of the inside surface with acetone.

8.7.6.2.2 Brush and rinse the inside parts of the Swagelok fitting with acetone in a similar way until no visible particles remain.

8.7.6.2.3 Rinse the probe liner with acetone by tilting and rotating the probe while squirting acetone into its upper end so that all inside surfaces are wetted with acetone. Let the acetone drain from the lower end into the sample container. A funnel (glass or polyethylene) may be used to aid in transferring liquid washes to the container. Follow the acetone rinse with a probe brush. Hold the probe in an inclined position, squirt acetone into the upper end as the probe brush is being pushed with a twisting action through the probe, hold a sample container under the lower end of the probe, and catch any acetone and PM that is brushed from the probe. Run the brush through the probe three times or more until no visible PM is carried out with the acetone or until none remains in the probe liner on visual inspection. With stainless steel or other metal probes, run the brush through in the above-described manner at least six times, since metal probes have small crevices in which PM can be entrapped. Rinse the brush with acetone and quantitatively collect these washings in the sample container. After the brushing, make a final acetone rinse of the probe as described above.

8.7.6.2.4 It is recommended that two people clean the probe to minimize sample losses. Between sampling runs, keep brushes clean and protected from contamination.

8.7.6.2.5 After ensuring that all joints have been wiped clean of silicone grease, clean the inside of the front half of the filter holder by rubbing the surfaces with a nylon bristle brush and rinsing with acetone. Rinse each surface three times or more if needed to remove visible particulate. Make a final rinse of the brush and filter holder. Carefully rinse out the glass cyclone also (if applicable).

8.7.6.2.6 After rinsing the nozzle, probe, and front half of the filter holder with acetone, repeat the entire procedure with methylene chloride and save in a separate No. 2M container.

8.7.6.2.7 After acetone and methylene chloride washings and PM have been collected in the proper sample containers, tighten the lid on the sample containers so that acetone and methylene chloride will not leak out when it is shipped to the laboratory. Mark the height of the fluid level to determine whether leakage occurs during transport. Label each container to identify clearly its contents.

8.7.6.3 Container No. 3. Note the color of the indicating silica gel to determine whether it has been completely spent, and make a notation of its condition. Transfer the silica gel from the fourth impinger to its original container and seal the container. A funnel may make it easier to pour the silica gel

without spilling. A rubber policeman may be used as an aid in removing the silica gel from the impinger. It is not necessary to remove the small amount of dust particles that may adhere to the impinger wall and are difficult to remove. Since the gain in weight is to be used for moisture calculations, do not use any water or other liquids to transfer the silica gel. If a balance is available in the field, follow the procedure for Container No. 3 in section 11.2.3 of this method.

8.7.6.4 Impinger water. Treat the impingers as follows:

8.7.6.4.1 Make a notation of any color or film in the liquid catch. Measure the liquid that is in the first three impingers to within 1 ml by using a graduated cylinder or by weighing it to within 0.5 g by using a balance (if one is available). Record the volume or weight of liquid present. This information is required to calculate the moisture content of the effluent gas.

8.7.6.4.2 Following the determination of the volume of liquid present, rinse the back half of the train with water, add it to the impinger catch, and store it in a container labeled 3W (water).

8.7.6.4.3 Following the water rinse, rinse the back half of the train with acetone to remove the excess water to enhance subsequent organic recovery with methylene chloride and quantitatively recover to a container labeled 3S (solvent) followed by at least three sequential rinsings with aliquots of methylene chloride. Quantitatively recover to the same container labeled 3S. Record separately the amount of both acetone and methylene chloride used to the nearest 1 ml or 0.5g.

NOTE: Because the subsequent analytical finish is gravimetric, it is okay to recover both solvents to the same container. This would not be recommended if other analytical finishes were required.

8.8 Sample transport. Whenever possible, containers should be shipped in such a way that they remain upright at all times.

*9.0 Quality Control*

9.1 Miscellaneous quality control measures.

| Section | Quality control measure | Effect |
|---|---|---|
| 8.4, 10.1–10.6. | Sampling and equipment leak check and calibration. | Ensure accurate measurement of stack gas flow rate, sample volume. |

9.2 Volume metering system checks. The following quality control procedures are suggested to check the volume metering system calibration values at the field test site prior to sample collection. These procedures are optional.

9.2.1 Meter orifice check. Using the calibration data obtained during the calibration procedure described in section 10.3 of this method, determine the $\Delta H_a$ for the metering system orifice. The $\Delta H_a$ is the orifice pressure differential in units of in. $H_20$ that correlates to 0.75 cfm of air at 528 °R and 29.92 in. Hg. The $\Delta H_a$ is calculated as follows:

$$\Delta H_a = 0..0319\ \Delta H \frac{T_m \Theta^2}{P_{bar} Y^2 V_m^2}$$

Where

0.0319 = (0.0567 in. Hg/ °R)(0.75 cfm)$^2$;

$\Delta H$ = Average pressure differential across the orifice meter, in. $H_20$;

$T_m$ = Absolute average DGM temperature, °R;

$\Theta$ = Total sampling time, min;

$P_{bar}$ = Barometric pressure, in. Hg;

Y = DGM calibration factor, dimensionless;

$V_m$ = Volume of gas sample as measured by DGM, dcf.

9.2.1.1 Before beginning the field test (a set of three runs usually constitutes a field test), operate the metering system (i.e., pump, volume meter, and orifice) at the $\Delta H_a$ pressure differential for 10 minutes. Record the volume collected, the DGM temperature, and the barometric pressure. Calculate a DGM calibration check value, $Y_c$, as follows:

$$Y_c = \frac{10}{V_m}\left[\frac{0.0319\ T_m}{P_{bar}}\right]^{\frac{1}{2}}$$

Where

$Y_c$ = DGM calibration check value, dimensionless;

10 = Run time, min.

9.2.1.2 Compare the $Y_c$ value with the dry gas meter calibration factor Y to determine that: 0.97 Y <$Y_c$ <1.03Y. If the $Y_c$ value is not within this range, the volume metering system should be investigated before beginning the test.

9.2.2 Calibrated critical orifice. A calibrated critical orifice, calibrated against a wet test meter or spirometer and designed to

be inserted at the inlet of the sampling meter box, may be used as a quality control check by following the procedure of section 16.2 of this method.

*10.0 Calibration and Standardization*

NOTE: Maintain a laboratory log of all calibrations.

10.1 Probe nozzle. Probe nozzles shall be calibrated before their initial use in the field. Using a micrometer, measure the ID of the nozzle to the nearest 0.025 mm (0.001 in.). Make three separate measurements using different diameters each time, and obtain the average of the measurements. The difference between the high and low numbers shall not exceed 0.1 mm (0.004 in.). When nozzles become nicked, dented, or corroded, they shall be reshaped, sharpened, and recalibrated before use. Each nozzle shall be permanently and uniquely identified.

10.2 Pitot tube assembly. The Type S pitot tube assembly shall be calibrated according to the procedure outlined in section 10.1 of Method 2, 40 CFR part 60, appendix A.

10.3 Metering system.

10.3.1 Calibration prior to use. Before its initial use in the field, the metering system shall be calibrated as follows: Connect the metering system inlet to the outlet of a wet test meter that is accurate to within 1 percent. Refer to Figure 5–5 of Method 5, 40 CFR part 60, appendix A. The wet test meter should have a capacity of 30 liters/revolution (1 $ft^3$/rev). A spirometer of 400 liters (14 $ft^3$) or more capacity, or equivalent, may be used for this calibration, although a wet test meter is usually more practical. The wet test meter should be periodically calibrated with a spirometer or a liquid displacement meter to ensure the accuracy of the wet test meter. Spirometers or wet test meters of other sizes may be used, provided that the specified accuracies of the procedure are maintained. Run the metering system pump for about 15 minutes with the orifice manometer indicating a median reading, as expected in field use, to allow the pump to warm up and to permit the interior surface of the wet test meter to be thoroughly wetted. Then, at each of a minimum of three orifice manometer settings, pass an exact quantity of gas through the wet test meter and note the gas volume indicated by the DGM. Also note the barometric pressure and the temperatures of the wet test meter, the inlet of the DGM, and the outlet of the DGM. Select the highest and lowest orifice settings to bracket the expected field operating range of the orifice. Use a minimum volume of 0.15 $m^3$ (5 cf) at all orifice settings. Record all the data on a form similar to Figure 5–6 of Method 5, 40 CFR part 60, appendix A, and calculate Y (the DGM calibration factor) and $\Delta H_a$ (the orifice calibration factor) at each orifice setting, as shown on Figure 5–6 of Method 5, 40 CFR part 60, appendix A. Allowable tolerances for individual Y and $\Delta H_a$ values are given in Figure 5–6 of Method 5, 40 CFR part 60, appendix A. Use the average of the Y values in the calculations in section 12 of this method.

10.3.1.1 Before calibrating the metering system, it is suggested that a leak check be conducted. For metering systems having diaphragm pumps, the normal leak check procedure will not detect leakages within the pump. For these cases the following leak check procedure is suggested: make a 10-minute calibration run at 0.00057 $m^3$/min (0.02 cfm); at the end of the run, take the difference of the measured wet test meter and DGM volumes; divide the difference by 10 to get the leak rate. The leak rate should not exceed 0.00057 $m^3$/min (0.02 cfm).

10.3.2 Calibration after use. After each field use, the calibration of the metering system shall be checked by performing three calibration runs at a single, intermediate orifice setting (based on the previous field test) with the vacuum set at the maximum value reached during the test series. To adjust the vacuum, insert a valve between the wet test meter and the inlet of the metering system. Calculate the average value of the DGM calibration factor. If the value has changed by more than 5 percent, recalibrate the meter over the full range of orifice settings, as previously detailed.

NOTE: Alternative procedures, e.g., rechecking the orifice meter coefficient, may be used, subject to the approval of the Administrator.

10.3.3 Acceptable variation in calibration. If the DGM coefficient values obtained before and after a test series differ by more than 5 percent, either the test series shall be voided or calculations for the test series shall be performed using whichever meter coefficient value (i.e., before or after) gives the lower value of total sample volume.

10.4 Probe heater calibration. Use a heat source to generate air heated to selected temperatures that approximate those expected to occur in the sources to be sampled. Pass this air through the probe at a typical sample flow rate while measuring the probe inlet and outlet temperatures at various probe heater settings. For each air temperature generated, construct a graph of probe heating system setting versus probe outlet temperature. The procedure outlined in APTD–0576 can also be used. Probes constructed according to APTD–0581 need not be calibrated if the calibration curves in APTD–0576 are used. Also, probes with outlet temperature monitoring capabilities do not require calibration.

NOTE: The probe heating system shall be calibrated before its initial use in the field.

10.5 Temperature sensors. Use the procedure in Section 10.3 of Method 2, 40 CFR part

60, appendix A–1 to calibrate in-stack temperature sensors. Dial thermometers, such as are used for the DGM and condenser outlet, shall be calibrated against mercury-in-glass thermometers. An alternative mercury-free thermometer may be used if the thermometer is, at a minimum, equivalent in terms of performance or suitably effective for the specific temperature measurement application.

10.6 Barometer. Calibrate against a mercury barometer.

*11.0 Analytical Procedure*

11.1 Record the data required on a sheet such as the one shown in Figure 315–1 of this method.

11.2 Handle each sample container as follows:

11.2.1 Container No. 1.

11.2.1.1 PM analysis. Leave the contents in the shipping container or transfer the filter and any loose PM from the sample container to a tared glass weighing dish. Desiccate for 24 hours in a desiccator containing anhydrous calcium sulfate. Weigh to a constant weight and report the results to the nearest 0.1 mg. For purposes of this section, the term ''constant weight'' means a difference of no more than 0.5 mg or 1 percent of total weight less tare weight, whichever is greater, between two consecutive weighings, with no less than 6 hours of desiccation time between weighings (overnight desiccation is a common practice). If a third weighing is required and it agrees within ±0.5 mg, then the results of the second weighing should be used. For quality assurance purposes, record and report each individual weighing; if more than three weighings are required, note this in the results for the subsequent MCEM results.

11.2.1.2 MCEM analysis. Transfer the filter and contents quantitatively into a beaker. Add 100 ml of methylene chloride and cover with aluminum foil. Sonicate for 3 minutes then allow to stand for 20 minutes. Set up the filtration apparatus. Decant the solution into a clean Buchner fritted funnel. Immediately pressure filter the solution through the tube into another clean, dry beaker. Continue decanting and pressure filtration until all the solvent is transferred. Rinse the beaker and filter with 10 to 20 ml methylene chloride, decant into the Buchner fritted funnel and pressure filter. Place the beaker on a low-temperature hot plate (maximum 40 °C) and slowly evaporate almost to dryness. Transfer the remaining last few milliliters of solution quantitatively from the beaker (using at least three aliquots of methylene chloride rinse) to a tared clean dry aluminum dish and evaporate to complete dryness. Remove from heat once solvent is evaporated. Reweigh the dish after a 30-minute equilibrium in the balance room and determine the weight to the nearest 0.1 mg. Conduct a methylene chloride blank run in an identical fashion.

11.2.2 Container No. 2.

11.2.2.1 PM analysis. Note the level of liquid in the container, and confirm on the analysis sheet whether leakage occurred during transport. If a noticeable amount of leakage has occurred, either void the sample or use methods, subject to the approval of the Administrator, to correct the final results. Measure the liquid in this container either volumetrically to ±1 ml or gravimetrically to 1 ±0.5 g. Transfer the contents to a tared 250 ml beaker and evaporate to dryness at ambient temperature and pressure. Desiccate for 24 hours, and weigh to a constant weight. Report the results to the nearest 0.1 mg.

11.2.2.2 MCEM analysis. Add 25 ml methylene chloride to the beaker and cover with aluminum foil. Sonicate for 3 minutes then allow to stand for 20 minutes; combine with contents of Container No. 2M and pressure filter and evaporate as described for Container 1 in section 11.2.1.2 of this method.

*Notes for MCEM Analysis*

1. Light finger pressure only is necessary on 24/40 adaptor. A Chemplast adapter #15055–240 has been found satisfactory.

2. Avoid aluminum dishes made with fluted sides, as these may promote solvent ''creep,'' resulting in possible sample loss.

3. If multiple samples are being run, rinse the Buchner fritted funnel twice between samples with 5 ml solvent using pressure filtration. After the second rinse, continue the flow of air until the glass frit is completely dry. Clean the Buchner fritted funnels thoroughly after filtering five or six samples.

11.2.3 Container No. 3. Weigh the spent silica gel (or silica gel plus impinger) to the nearest 0.5 g using a balance. This step may be conducted in the field.

11.2.4 Container 3W (impinger water).

11.2.4.1 MCEM analysis. Transfer the solution into a 1,000 ml separatory funnel quantitatively with methylene chloride washes. Add enough solvent to total approximately 50 ml, if necessary. Shake the funnel for 1 minute, allow the phases to separate, and drain the solvent layer into a 250 ml beaker. Repeat the extraction twice. Evaporate with low heat (less than 40 °C) until near dryness. Transfer the remaining few milliliters of solvent quantitatively with small solvent washes into a clean, dry, tared aluminum dish and evaporate to dryness. Remove from heat once solvent is evaporated. Reweigh the dish after a 30-minute equilibration in the balance room and determine the weight to the nearest 0.1 mg.

11.2.5 Container 3S (solvent).

11.2.5.1 MCEM analysis. Transfer the mixed solvent to 250 ml beaker(s). Evaporate and weigh following the procedures detailed for container 3W in section 11.2.4 of this method.

11.2.6 Blank containers. Measure the distilled water, acetone, or methylene chloride in each container either volumetrically or gravimetrically. Transfer the ''solvent'' to a tared 250 ml beaker, and evaporate to dryness at ambient temperature and pressure. (Conduct a solvent blank on the distilled deionized water blank in an identical fashion to that described in section 11.2.4.1 of this method.) Desiccate for 24 hours, and weigh to a constant weight. Report the results to the nearest 0.1 mg.

NOTE: The contents of Containers No. 2, 3W, and 3M as well as the blank containers may be evaporated at temperatures higher than ambient. If evaporation is done at an elevated temperature, the temperature must be below the boiling point of the solvent; also, to prevent ''bumping,'' the evaporation process must be closely supervised, and the contents of the beaker must be swirled occasionally to maintain an even temperature. Use extreme care, as acetone and methylene chloride are highly flammable and have a low flash point.

*12.0 Data Analysis and Calculations*

12.1 Carry out calculations, retaining at least one extra decimal figure beyond that of the acquired data. Round off figures after the final calculation. Other forms of the equations may be used as long as they give equivalent results.

12.2 Nomenclature.

$A_n$ = Cross-sectional area of nozzle, $m^3$ ($ft^3$).
$B_{ws}$ = Water vapor in the gas stream, proportion by volume.
$C_a$ = Acetone blank residue concentration, mg/g.
$C_s$ = Concentration of particulate matter in stack gas, dry basis, corrected to standard conditions, g/dscm (g/dscf).
I = Percent of isokinetic sampling.
$L_a$ = Maximum acceptable leakage rate for either a pretest leak check or for a leak check following a component change; equal to 0.00057 $m^3$/min (0.02 cfm) or 4 percent of the average sampling rate, whichever is less.
$L_i$ = Individual leakage rate observed during the leak check conducted prior to the ''$i^{th}$'' component change (I = 1, 2, 3...n), $m^3$/min (cfm).
$L_p$ = Leakage rate observed during the post-test leak check, $m^3$/min (cfm).
$m_a$ = Mass of residue of acetone after evaporation, mg.
$m_n$ = Total amount of particulate matter collected, mg.
$M_w$ = Molecular weight of water, 18.0 g/g-mole (18.0 lb/lb-mole).
$P_{bar}$ = Barometric pressure at the sampling site, mm Hg (in Hg).
$P_s$ = Absolute stack gas pressure, mm Hg (in. Hg).
$P_{std}$ = Standard absolute pressure, 760 mm Hg (29.92 in. Hg).
R = Ideal gas constant, 0.06236 [(mm Hg)($m^3$)]/[(°K) (g-mole)] '61' 21.85 [(in. Hg)($ft^3$)]/[(°R)(lb-mole)'61' ].
$T_m$ = Absolute average dry gas meter (DGM) temperature (see Figure 5–2 of Method 5, 40 CFR part 60, appendix A), °K (°R).
$T_s$ = Absolute average stack gas temperature (see Figure 5–2 of Method 5, 40 CFR part 60, appendix A), °K(°R).
$T_{std}$ = Standard absolute temperature, 293 °K (528 °R).
$V_a$ = Volume of acetone blank, ml.
$V_{aw}$ = Volume of acetone used in wash, ml.
$V_t$ = Volume of methylene chloride blank, ml.
$V_{tw}$ = Volume of methylene chloride used in wash, ml.
$V_{lc}$ = Total volume liquid collected in impingers and silica gel (see Figure 5–3 of Method 5, 40 CFR part 60, appendix A), ml.
$V_m$ = Volume of gas sample as measured by dry gas meter, dcm (dcf).
$V_{m(std)}$ = Volume of gas sample measured by the dry gas meter, corrected to standard conditions, dscm (dscf).
$V_{w(std)}$ = Volume of water vapor in the gas sample, corrected to standard conditions, scm (scf).
$V_s$ = Stack gas velocity, calculated by Equation 2–9 in Method 2, 40 CFR part 60, appendix A, using data obtained from Method 5, 40 CFR part 60, appendix A, m/sec (ft/sec).
$W_a$ = Weight of residue in acetone wash, mg.
Y = Dry gas meter calibration factor.
$\Delta H$ = Average pressure differential across the orifice meter (see Figure 5–2 of Method 5, 40 CFR part 60, appendix A), mm $H_2O$ (in $H_2O$).
$\rho_a$ = Density of acetone, 785.1 mg/ml (or see label on bottle).
$\rho_w$ = Density of water, 0.9982 g/ml (0.002201 lb/ml).
$\rho_t$ = Density of methylene chloride, 1316.8 mg/ml (or see label on bottle).
$\Theta$ = Total sampling time, min.
$\Theta_1$ = Sampling time interval, from the beginning of a run until the first component change, min.
$\Theta_I$ = Sampling time interval, between two successive component changes, beginning with the interval between the first and second changes, min.
$\Theta_p$ = Sampling time interval, from the final ($n^{th}$) component change until the end of the sampling run, min.
13.6 = Specific gravity of mercury.
60 = Sec/min.
100 = Conversion to percent.

12.3 Average dry gas meter temperature and average orifice pressure drop. See data sheet (Figure 5–2 of Method 5, 40 CFR part 60, appendix A).

12.4 Dry gas volume. Correct the sample volume measured by the dry gas meter to standard conditions (20 °C, 760 mm Hg or 68 °F, 29.92 in Hg) by using Equation 315–1.

$$V = V_m Y \frac{T_{std}\left(P_{bar} + \frac{\Delta H}{13.6}\right)}{T_m P_{std}} = V = K_1 V_m Y \frac{P_{bar} + \left(\frac{\Delta H}{13.6}\right)}{T_m} \qquad \text{Eq. 315-1}$$

Where

$K_1$ = 0.3858 °K/mm Hg for metric units,
= 17.64 °R/in Hg for English units.

NOTE: Equation 315–1 can be used as written unless the leakage rate observed during any of the mandatory leak checks (i.e., the post-test leak check or leak checks conducted prior to component changes) exceeds $L_a$. If $L_p$ or $L_i$ exceeds $L_a$, Equation 315–1 must be modified as follows:

(a) Case I. No component changes made during sampling run. In this case, replace $V_m$ in Equation 315–1 with the expression:

$[V_m—(L_p—L_a)\ \Theta]$

(b) Case II. One or more component changes made during the sampling run. In this case, replace $V_m$ in Equation 315–1 by the expression:

$$\left[V_m - \left(L_1 - L_a\right)\Theta_1 - \sum_{i=2}^{n}\left(L_i - L_a\right)\Theta_i - \left(L_p - L_a\right)\Theta_p\right]$$

and substitute only for those leakage rates ($L_i$ or $L_p$) which exceed $L_a$.

12.5 Volume of water vapor condensed.

$$V_{w(std)} = V_{1c}\frac{\rho_w R T_{std}}{M_w P_{std}} = K_2 V_{1c} \qquad \text{Eq. 315-2}$$

Where

$K_2$ = 0.001333 $m^3$/ml for metric units;
= 0.04706 $ft^3$/ml for English units.

12.6 Moisture content.

$$B_{ws} = \frac{V_{w(std)}}{V_{m(std)} + V_{w(std)}} \qquad \text{Eq. 315-3}$$

NOTE: In saturated or water droplet-laden gas streams, two calculations of the moisture content of the stack gas shall be made, one from the impinger analysis (Equation 315-3), and a second from the assumption of saturated conditions. The lower of the two values of $B_{ws}$ shall be considered correct. The procedure for determining the moisture content based upon assumption of saturated conditions is given in section 4.0 of Method 4, 40 CFR part 60, appendix A. For the purposes of this method, the average stack gas temperature from Figure 5–2 of Method 5, 40 CFR part 60, appendix A may be used to make this determination, provided that the accuracy of the in-stack temperature sensor is ±1 °C (2 °F).

12.7 Acetone blank concentration.

$$C_a = \frac{M_a}{V_a \rho_a} \qquad \text{Eq. 315-4}$$

12.8 Acetone wash blank.

$W_a = C_a\ V_{aw}\ \rho a$ *Eq. 315–5*

12.9 Total particulate weight. Determine the total PM catch from the sum of the weights obtained from Containers l and 2 less the acetone blank associated with these two containers (see Figure 315–1).

NOTE: Refer to section 8.5.8 of this method to assist in calculation of results involving two or more filter assemblies or two or more sampling trains.

12.10 Particulate concentration.

$c_s = K_3\ m_n/V_{m(std)}$ Eq. 315–6

where

K = 0.001 g/mg for metric units;

= 0.0154 gr/mg for English units.

12.11 Conversion factors.

| From | To | Multiply by |
|---|---|---|
| $ft^3$ | $m^3$ | 0.02832 |
| gr | mg | 64.80004 |
| $gr/ft^3$ | $mg/m^3$ | 2288.4 |
| mg | g | 0.001 |
| gr | lb | $1.429 \times 10^{-4}$ |

12.12 Isokinetic variation.

12.12.1 Calculation from raw data.

$$I = \frac{100\, T_s \left| K_4 V_{1c} + \left(\frac{V_m Y}{T_m}\right)\left(P_{bar} + \frac{\Delta H}{13.6}\right)\right.}{60\, \Theta\, V_s P_s A_n} \qquad \text{Eq. 315-7}$$

where

$K_4$ = 0.003454 [(mm Hg)($m^3$)]/[(m1)(°K)] for metric units;

= 0.002669 [(in Hg)($ft^3$)]/[(m1)(°R)] for English units.

12.12.2 Calculation from intermediate values.

$$I = \frac{T_s V_{m(std)} P_{std}\, 100}{T_{std} V_s\, \Theta\, A_n P_s\, 60\left(1 - B_{ws}\right)} = K_5 \frac{T_s V_{m(std)}}{P_s V_s A_n\, \Theta\left(1 - B_{ws}\right)} \qquad \text{Eq. 315-8}$$

where

$K_5$ = 4.320 for metric units;

= 0.09450 for English units.

12.12.3 Acceptable results. If 90 percent ≤I ≤110 percent, the results are acceptable. If the PM or MCEM results are low in comparison to the standard, and ''I'' is over 110 percent or less than 90 percent, the Administrator may opt to accept the results. Reference 4 in the Bibliography may be used to make acceptability judgments. If ''I'' is judged to be unacceptable, reject the results, and repeat the test.

12.13 Stack gas velocity and volumetric flow rate. Calculate the average stack gas velocity and volumetric flow rate, if needed, using data obtained in this method and the equations in sections 5.2 and 5.3 of Method 2, 40 CFR part 60, appendix A.

12.14 MCEM results. Determine the MCEM concentration from the results from Containers 1, 2, 2M, 3W, and 3S less the acetone, methylene chloride, and filter blanks value as determined in the following equation:

$m_{mcem} = Sm_{total} - w_a - w_t - f_b$

*13.0 Method Performance* [Reserved]

*14.0 Pollution Prevention* [Reserved]

*15.0 Waste Management* [Reserved]

*16.0 Alternative Procedures*

16.1 Dry gas meter as a calibration standard. A DGM may be used as a calibration standard for volume measurements in place of the wet test meter specified in section 16.1 of this method, provided that it is calibrated initially and recalibrated periodically as follows:

16.1.1 Standard dry gas meter calibration.

16.1.1.1. The DGM to be calibrated and used as a secondary reference meter should be of high quality and have an appropriately sized capacity, e.g., 3 liters/rev (0.1 $ft^3$/rev). A spirometer (400 liters or more capacity), or equivalent, may be used for this calibration, although a wet test meter is usually more practical. The wet test meter should have a capacity of 30 liters/rev (1 $ft^3$/rev) and be capable of measuring volume to within 1.0 percent; wet test meters should be checked against a spirometer or a liquid displacement meter to ensure the accuracy of the wet test meter. Spirometers or wet test meters of other sizes may be used, provided that the specified accuracies of the procedure are maintained.

16.1.1.2 Set up the components as shown in Figure 5–7 of Method 5, 40 CFR part 60, appendix A. A spirometer, or equivalent, may be used in place of the wet test meter in the system. Run the pump for at least 5 minutes at a flow rate of about 10 liters/min (0.35 cfm) to condition the interior surface of the wet test meter. The pressure drop indicated by the manometer at the inlet side of the DGM should be minimized (no greater than 100 mm $H_2O$ [4 in. $H_2O$] at a flow rate of 30 liters/min [1 cfm]). This can be accomplished by using

large-diameter tubing connections and straight pipe fittings.

16.1.1.3 Collect the data as shown in the example data sheet (see Figure 5–8 of Method 5, 40 CFR part 60, appendix A). Make triplicate runs at each of the flow rates and at no less than five different flow rates. The range of flow rates should be between 10 and 34 liters/min (0.35 and 1.2 cfm) or over the expected operating range.

16.1.1.4 Calculate flow rate, Q, for each run using the wet test meter volume, $V_w$, and the run time, q. Calculate the DGM coefficient, $Y_{ds}$, for each run. These calculations are as follows:

$$Q = K_1 \frac{P_{bar} V_w}{(t_w + t_{std})\Theta} \qquad \text{Eq. 315-9}$$

$$Y_{ds} = \frac{V_w (T_{ds} + T_{std}) P_{bar}}{V_{ds}(T_w + T_{std})\left(P_{bar} + \frac{\Delta p}{13.6}\right)} \qquad \text{Eq. 315-10}$$

Where

$K_1$ = 0.3858 for international system of units (SI); 17.64 for English units;

$P_{bar}$ = Barometric pressure, mm Hg (in Hg);

$V_w$ = Wet test meter volume, liter ($ft^3$);

$t_w$ = Average wet test meter temperature, °C (°F);

$t_{std}$ = 273 °C for SI units; 460 °F for English units;

$\Theta$ = Run time, min;

$t_{ds}$ = Average dry gas meter temperature, °C (°F);

$V_{ds}$ = Dry gas meter volume, liter ($ft^3$);

$\Delta p$ = Dry gas meter inlet differential pressure, mm $H_2O$ (in $H_2O$).

16.1.1.5 Compare the three $Y_{ds}$ values at each of the flow rates and determine the maximum and minimum values. The difference between the maximum and minimum values at each flow rate should be no greater than 0.030. Extra sets of triplicate runs may be made in order to complete this requirement. In addition, the meter coefficients should be between 0.95 and 1.05. If these specifications cannot be met in three sets of successive triplicate runs, the meter is not suitable as a calibration standard and should not be used as such. If these specifications are met, average the three $Y_{ds}$ values at each flow rate resulting in five average meter coefficients, $Y_{ds}$.

16.1.1.6 Prepare a curve of meter coefficient, $Y_{ds}$, versus flow rate, Q, for the DGM. This curve shall be used as a reference when the meter is used to calibrate other DGMs and to determine whether recalibration is required.

16.1.2 Standard dry gas meter recalibration.

16.1.2.1 Recalibrate the standard DGM against a wet test meter or spirometer annually or after every 200 hours of operation, whichever comes first. This requirement is valid provided the standard DGM is kept in a laboratory and, if transported, cared for as any other laboratory instrument. Abuse to the standard meter may cause a change in the calibration and will require more frequent recalibrations.

16.1.2.2 As an alternative to full recalibration, a two-point calibration check may be made. Follow the same procedure and equipment arrangement as for a full recalibration, but run the meter at only two flow rates (suggested rates are 14 and 28 liters/min [0.5 and 1.0 cfm]). Calculate the meter coefficients for these two points, and compare the values with the meter calibration curve. If the two coefficients are within 1.5 percent of the calibration curve values at the same flow rates, the meter need not be recalibrated until the next date for a recalibration check.

6.2 Critical orifices as calibration standards. Critical orifices may be used as calibration standards in place of the wet test meter specified in section 10.3 of this method, provided that they are selected, calibrated, and used as follows:

16.2.1 Selection of critical orifices.

16.2.1.1 The procedure that follows describes the use of hypodermic needles or stainless steel needle tubing that has been found suitable for use as critical orifices. Other materials and critical orifice designs may be used provided the orifices act as true critical orifices; i.e., a critical vacuum can be obtained, as described in section 7.2.2.2.3 of Method 5, 40 CFR part 60, appendix A. Select five critical orifices that are appropriately sized to cover the range of flow rates between 10 and 34 liters/min or the expected operating range. Two of the critical orifices should bracket the expected operating range. A minimum of three critical orifices will be needed to calibrate a Method 5 DGM; the other two critical orifices can serve as spares and provide better selection for bracketing the range of operating flow

rates. The needle sizes and tubing lengths shown in Table 315–1 give the approximate flow rates indicated in the table.

16.2.1.2 These needles can be adapted to a Method 5 type sampling train as follows: Insert a serum bottle stopper, 13 × 20 mm sleeve type, into a 0.5 in Swagelok quick connect. Insert the needle into the stopper as shown in Figure 5–9 of Method 5, 40 CFR part 60, appendix A.

16.2.2 Critical orifice calibration. The procedure described in this section uses the Method 5 meter box configuration with a DGM as described in section 6.1.1.9 of this method to calibrate the critical orifices. Other schemes may be used, subject to the approval of the Administrator.

16.2.2.1 Calibration of meter box. The critical orifices must be calibrated in the same configuration as they will be used; i.e., there should be no connections to the inlet of the orifice.

16.2.2.1.1 Before calibrating the meter box, leak-check the system as follows: Fully open the coarse adjust valve and completely close the bypass valve. Plug the inlet. Then turn on the pump and determine whether there is any leakage. The leakage rate shall be zero; i.e., no detectable movement of the DGM dial shall be seen for 1 minute.

16.2.2.1.2 Check also for leakages in that portion of the sampling train between the pump and the orifice meter. See section 5.6 of Method 5, 40 CFR part 60, appendix A for the procedure; make any corrections, if necessary. If leakage is detected, check for cracked gaskets, loose fittings, worn 0-rings, etc. and make the necessary repairs.

16.2.2.1.3 After determining that the meter box is leakless, calibrate the meter box according to the procedure given in section 5.3 of Method 5, 40 CFR part 60, appendix A. Make sure that the wet test meter meets the requirements stated in section 7.1.1.1 of Method 5, 40 CFR part 60, appendix A. Check the water level in the wet test meter. Record the DGM calibration factor, Y.

16.2.2.2 Calibration of critical orifices. Set up the apparatus as shown in Figure 5–10 of Method 5, 40 CFR part 60, appendix A.

16.2.2.2.1 Allow a warm-up time of 15 minutes. This step is important to equilibrate the temperature conditions through the DGM.

16.2.2.2.2 Leak-check the system as in section 7.2.2.1.1 of Method 5, 40 CFR part 60, appendix A. The leakage rate shall be zero.

16.2.2.2.3 Before calibrating the critical orifice, determine its suitability and the appropriate operating vacuum as follows: turn on the pump, fully open the coarse adjust valve, and adjust the bypass valve to give a vacuum reading corresponding to about half of atmospheric pressure. Observe the meter box orifice manometer reading, DH. Slowly increase the vacuum reading until a stable reading is obtained on the meter box orifice manometer. Record the critical vacuum for each orifice. Orifices that do not reach a critical value shall not be used.

16.2.2.2.4 Obtain the barometric pressure using a barometer as described in section 6.1.2 of this method. Record the barometric pressure, $P_{bar}$, in mm Hg (in. Hg).

16.2.2.2.5 Conduct duplicate runs at a vacuum of 25 to 50 mm Hg (1 to 2 in. Hg) above the critical vacuum. The runs shall be at least 5 minutes each. The DGM volume readings shall be in increments of complete revolutions of the DGM. As a guideline, the times should not differ by more than 3.0 seconds (this includes allowance for changes in the DGM temperatures) to achieve ±0.5 percent in K′. Record the information listed in Figure 5–11 of Method 5, 40 CFR part 60, appendix A.

16.2.2.2.6 Calculate K′ using Equation 315–11.

$$K' = \frac{K_1 V_m Y \left(P_{bar} + \frac{\Delta H}{13.6}\right) T_{amb}^{\frac{1}{2}}}{P_{bar} T_m \Theta} \qquad \text{Eq. 315-11}$$

where

K′ = Critical orifice coefficient, [m³)(°K)½]/[(mm Hg)(min)] [(ft³)(°R)½)]/[(in. Hg)(min)]

$T_{amb}$ = Absolute ambient temperature, °K (°R).

16.2.2.2.7 Average the K′ values. The individual K′ values should not differ by more than ±0.5 percent from the average.

16.2.3 Using the critical orifices as calibration standards.

16.2.3.1 Record the barometric pressure.

16.2.3.2 Calibrate the metering system according to the procedure outlined in sections 7.2.2.2.1 to 7.2.2.2.5 of Method 5, 40 CFR part 60, appendix A. Record the information listed in Figure 5–12 of Method 5, 40 CFR part 60, appendix A.

16.2.3.3 Calculate the standard volumes of air passed through the DGM and the critical orifices, and calculate the DGM calibration factor, Y, using the equations below:

$V_{m(std)} = K_1 V_m [P_{bar} + (\Delta H/13.6)]/T_m$ *Eq. 315–12*

$V_{cr(std)} = K' (P_{bar} \Theta)/T_{amb}^{1/2}$ *Eq. 315–13*

$Y = V_{cr(std)}/V_{m(std)}$ *Eq. 315–14*

where

$V_{cr(std)}$ = Volume of gas sample passed through the critical orifice, corrected to standard conditions, dscm (dscf).

K′ = 0.3858 °K/mm Hg for metric units

= 17.64 °R/in Hg for English units.

16.2.3.4 Average the DGM calibration values for each of the flow rates. The calibration factor, Y, at each of the flow rates should not differ by more than ±2 percent from the average.

16.2.3.5 To determine the need for recalibrating the critical orifices, compare the DGM Y factors obtained from two adjacent orifices each time a DGM is calibrated; for example, when checking orifice 13/2.5, use orifices 12/10.2 and 13/5.1. If any critical orifice yields a DGM Y factor differing by more than 2 percent from the others, recalibrate the critical orifice according to section 7.2.2.2 of Method 5, 40 CFR part 60, appendix A.

*17.0 References*

1. Addendum to Specifications for Incinerator Testing at Federal Facilities. PHS, NCAPC. December 6, 1967.

2. Martin, Robert M. Construction Details of Isokinetic Source-Sampling Equipment. Environmental Protection Agency. Research Triangle Park, NC. APTD–0581. April 1971.

3. Rom, Jerome J. Maintenance, Calibration, and Operation of Isokinetic Source Sampling Equipment. Environmental Protection Agency. Research Triangle Park, NC. APTD–0576. March 1972.

4. Smith, W.S., R.T. Shigehara, and W.F. Todd. A Method of Interpreting Stack Sampling Data. Paper Presented at the 63rd Annual Meeting of the Air Pollution Control Association, St. Louis, MO. June 14–19, 1970.

5. Smith, W.S., et al. Stack Gas Sampling Improved and Simplified With New Equipment. APCA Paper No. 67–119. 1967.

6. Specifications for Incinerator Testing at Federal Facilities. PHS, NCAPC. 1967.

7. Shigehara, R.T. Adjustment in the EPA Nomograph for Different Pitot Tube Coefficients and Dry Molecular Weights. Stack Sampling News *2*:4–11. October 1974.

8. Vollaro, R.F. A Survey of Commercially Available Instrumentation for the Measurement of Low-Range Gas Velocities. U.S. Environmental Protection Agency, Emission Measurement Branch. Research Triangle Park, NC. November 1976 (unpublished paper).

9. Annual Book of ASTM Standards. Part 26. Gaseous Fuels; Coal and Coke; Atmospheric Analysis. American Society for Testing and Materials. Philadelphia, PA. 1974. pp. 617–622.

10. Felix, L.G., G.I. Clinard, G.E. Lacy, and J.D. McCain. Inertial Cascade Impactor Substrate Media for Flue Gas Sampling. U.S. Environmental Protection Agency. Research Triangle Park, NC 27711. Publication No. EPA–600/7–77–060. June 1977. 83 p.

11. Westlin, P.R., and R.T. Shigehara. Procedure for Calibrating and Using Dry Gas Volume Meters as Calibration Standards. Source Evaluation Society Newsletter. *3* (1):17–30. February 1978.

12. Lodge, J.P., Jr., J.B. Pate, B.E. Ammons, and G.A. Swanson. The Use of Hypodermic Needles as Critical Orifices in Air Sampling. J. Air Pollution Control Association. *16*:197–200. 1966.

18.0 Tables, Diagrams, Flowcharts, and Validation Data

TABLE 315–1. FLOW RATES FOR VARIOUS NEEDLE SIZES AND TUBE LENGTHS.

| Gauge/length (cm) | Flow rate (liters/min) | Gauge/length (cm) | Flow rate (liters/min) |
|---|---|---|---|
| 12/7.6 | 32.56 | 14/2.5 | 19.54 |
| 12/10.2 | 30.02 | 14/5.1 | 17.27 |
| 13/2.5 | 25.77 | 14/7.6 | 16.14 |
| 13/5.1 | 23.50 | 15/3.2 | 14.16 |
| 13/7.6 | 22.37 | 15/7.6 | 11.61 |
| 13/10.2 | 20.67 | 115/10.2 | 10.48 |

**Figure 315-1. Particulate and MCEM Analyses**

| **Particulate Analysis** | | | |
|---|---|---|---|
| Plant | | | |
| Date | | | |
| Run No. | | | |
| Filter No. | | | |
| Amount liquid lost during transport | | | |
| Acetone blank volume (ml) | | | |
| Acetone blank concentration (Eq. 315-4) (mg/mg) | | | |
| Acetone wash blank (Eq. 315-5) (mg) | | | |
| | **Final weight (mg)** | **Tare weight (mg)** | **Weight gain (mg)** |
| Container No. 1 | | | |
| Container No. 2 | | | |
| Total | | | |
| Less Acetone blank | | | |
| Weight of particulate matter | | | |
| | Final volume (mg) | Initial volume (mg) | Liquid collected (mg) |
| **Moisture Analysis** | | | |
| Impingers | Note 1 | Note 1 | |
| Silica gel | | | |
| Total | | | |
| NOTE 1: Convert volume of water to weight by multiplying by the density of water (1 g/ml). | | | |

| **Container No.** | **Final weight (mg)** | **Tare of aluminum dish (mg)** | **Weight gain** | **Acetone wash volume (ml)** | **Methylene chloride wash volume (ml)** |
|---|---|---|---|---|---|
| **MCEM Analysis** | | | | | |
| 1 | | | | | |
| 2 + 2M | | | | | |
| 3W | | | | | |

| | | | | | |
|---|---|---|---|---|---|
| 3S | | | | | |
| Total | | | $\Sigma m_{total}$ | $0V_{aw}$ | $\Sigma V_{tw}$ |

| | |
|---|---|
| Less acetone wash blank (mg) (not to exceed 1 mg/l of acetone used) | $w_a = c_a p_a \Sigma V_{aw}$ |
| Less methylene chloride wash blank (mg) (not to exceed 1.5 mg/l of methylene chloride used) | $w_t = c_t p_t \Sigma V_{tw}$ |
| Less filter blank (mg) (not to exceed 0.5 mg/filter) | $F_b$ |
| MCEM weight (mg) | $m_{MCEOM} = \Sigma m_{total} - w_a - w_t - f_b$ |

METHOD 316—SAMPLING AND ANALYSIS FOR FORMALDEHYDE EMISSIONS FROM STATIONARY SOURCES IN THE MINERAL WOOL AND WOOL FIBERGLASS INDUSTRIES

*1.0 Scope and Application*

This method is applicable to the determination of formaldehyde, CAS Registry number 50–00–0, from stationary sources in the mineral wool and wool fiber glass industries. High purity water is used to collect the formaldehyde. The formaldehyde concentrations in the stack samples are determined using the modified pararosaniline method. Formaldehyde can be detected as low as $8.8 \times 10^{-10}$ lbs/cu ft (11.3 ppbv) or as high as $1.8 \times 10^{-3}$ lbs/cu ft (23,000,000 ppbv), at standard conditions over a 1-hour sampling period, sampling approximately 30 cu ft.

*2.0 Summary of Method*

Gaseous and particulate pollutants are withdrawn isokinetically from an emission source and are collected in high purity water. Formaldehyde present in the emissions is highly soluble in high purity water. The high purity water containing formaldehyde is then analyzed using the modified pararosaniline method. Formaldehyde in the sample reacts with acidic pararosaniline, and the sodium sulfite, forming a purple chromophore. The intensity of the purple color, measured spectrophotometrically, provides an accurate and precise measure of the formaldehyde concentration in the sample.

*3.0 Definitions*

See the definitions in the General Provisions of this Subpart.

*4.0 Interferences*

Sulfite and cyanide in solution interfere with the pararosaniline method. A procedure to overcome the interference by each compound has been described by Miksch, et al.

*5.0 Safety* [Reserved]

*6.0 Apparatus and Materials*

6.1 A schematic of the sampling train is shown in Figure 1. This sampling train configuration is adapted from EPA Method 5, 40 CFR part 60, appendix A, procedures.

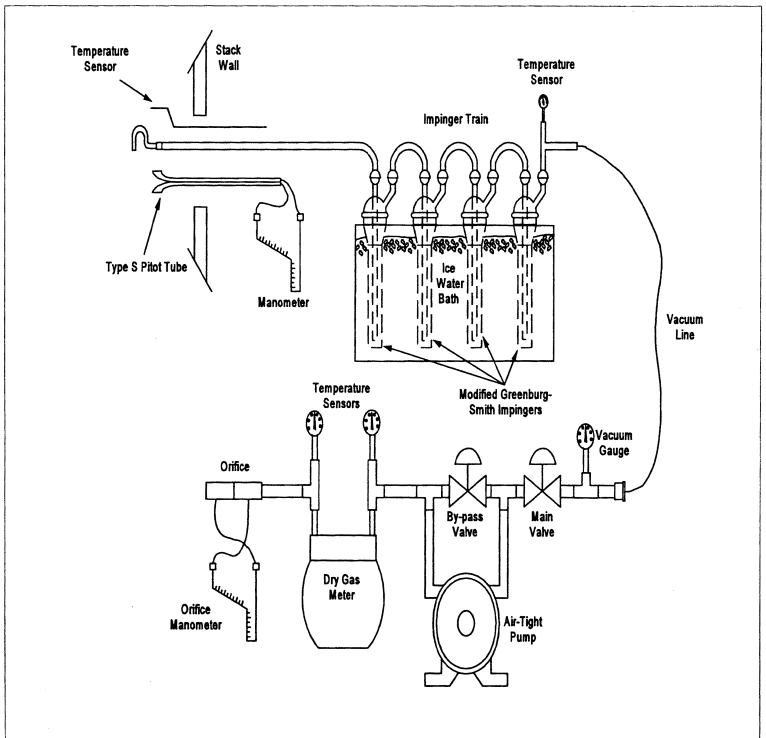


Figure 1. Sampling Train.

The sampling train consists of the following components: probe nozzle, probe liner, pitot tube, differential pressure gauge, impingers, metering system, barometer, and gas density determination equipment.

6.1.1 Probe Nozzle: Quartz, glass, or stainless steel with sharp, tapered (30 ° angle) leading edge. The taper shall be on the outside to preserve a constant inner diameter. The nozzle shall be buttonhook or elbow design. A range of nozzle sizes suitable for isokinetic sampling should be available in increments of 0.15 cm (1/16 in), e.g., 0.32 to 1.27 cm (1/8 to 1/2 in), or larger if higher volume sampling trains are used. Each nozzle shall be calibrated according to the procedure outlined in Section 10.1.

6.1.2 Probe Liner: Borosilicate glass or quartz shall be used for the probe liner. The probe shall be maintained at a temperature of 120 °C ±14 °C (248 °F ±25 °F).

6.1.3 Pitot Tube: The pitot tube shall be Type S, as described in Section 2.1 of EPA Method 2, 40 CFR part 60, appendix A, or any other appropriate device. The pitot tube shall be attached to the probe to allow constant monitoring of the stack gas velocity. The impact (high pressure) opening plane of the pitot tube shall be even with or above the nozzle entry plane (see Figure 2–6b, EPA Method 2, 40 CFR part 60, appendix A) during sampling. The Type S pitot tube assembly shall have a known coefficient, determined as outlined in Section 4 of EPA Method 2, 40 CFR part 60, appendix A.

6.1.4 Differential Pressure Gauge: The differential pressure gauge shall be an inclined manometer or equivalent device as described in Section 2.2 of EPA Method 2, 40 CFR part 60, appendix A. One manometer shall be used for velocity-head reading and the other for orifice differential pressure readings.

6.1.5 Impingers: The sampling train requires a minimum of four impingers, connected as shown in Figure 1, with ground glass (or equivalent) vacuum-tight fittings. For the first, third, and fourth impingers, use the Greenburg-Smith design, modified by replacing the tip with a 1.3 cm inside diameters (1/2 in) glass tube extending to 1.3 cm (1/2 in) from the bottom of the flask. For the second impinger, use a Greenburg-Smith impinger with the standard tip. Place a thermometer capable of measuring temperature

to within 1 °C (2 °F) at the outlet of the fourth impinger for monitoring purposes.

6.1.6 Metering System: The necessary components are a vacuum gauge, leak-free pump, thermometers capable of measuring temperatures within 3 °C (5.4 °F), dry-gas meter capable of measuring volume to within 1 percent, and related equipment as shown in Figure 1. At a minimum, the pump should be capable of 4 cfm free flow, and the dry gas meter should have a recording capacity of 0–999.9 cu ft with a resolution of 0.005 cu ft. Other metering systems may be used which are capable of maintaining sample volumes to within 2 percent. The metering system may be used in conjunction with a pitot tube to enable checks of isokinetic sampling rates.

6.1.7 Barometer: The barometer may be mercury, aneroid, or other barometer capable of measuring atmospheric pressure to within 2.5 mm Hg (0.1 in Hg). In many cases, the barometric reading may be obtained from a nearby National Weather Service Station, in which case the station value (which is the absolute barometric pressure) is requested and an adjustment for elevation differences between the weather station and sampling point is applied at a rate of minus 2.5 mm Hg (0.1 in Hg) per 30 m (100 ft) elevation increase (rate is plus 2.5 mm Hg per 30 m (100 ft) of elevation decrease).

6.1.8 Gas Density Determination Equipment: Temperature sensor and pressure gauge (as described in Sections 2.3 and 2.3 of EPA Method 2, 40 CFR part 60, appendix A), and gas analyzer, if necessary (as described in EPA Method 3, 40 CFR part 60, appendix A). The temperature sensor ideally should be permanently attached to the pitot tube or sampling probe in a fixed configuration such that the top of the sensor extends beyond the leading edge of the probe sheath and does not touch any metal. Alternatively, the sensor may be attached just prior to use in the field. Note, however, that if the temperature sensor is attached in the field, the sensor must be placed in an interference-free arrangement with respect to the Type S pitot openings (see Figure 2–7, EPA Method 2, 40 CFR part 60, appendix A). As a second alternative, if a difference of no more than 1 percent in the average velocity measurement is to be introduced, the temperature gauge need not be attached to the probe or pitot tube.

6.2 Sample Recovery

6.2.1 Probe Liner: Probe nozzle and brushes; bristle brushes with stainless steel wire handles are required. The probe brush shall have extensions of stainless steel, Teflon™, or inert material at least as long as the probe. The brushes shall be properly sized and shaped to brush out the probe liner, the probe nozzle, and the impingers.

6.2.2 Wash Bottles: One wash bottle is required. Polyethylene, Teflon™, or glass wash bottles may be used for sample recovery.

6.2.3 Graduated Cylinder and/or Balance: A graduated cylinder or balance is required to measure condensed water to the nearest 1 ml or 1 g. Graduated cylinders shall have division not >2 ml. Laboratory balances capable of weighing to ±0.5 g are required.

6.2.4 Polyethylene Storage Containers: 500 ml wide-mouth polyethylene bottles are required to store impinger water samples.

6.2.5 Rubber Policeman and Funnel: A rubber policeman and funnel are required to aid the transfer of material into and out of containers in the field.

6.3 Sample Analysis

6.3.1 Spectrophotometer—B&L 70, 710, 2000, etc., or equivalent; 1 cm pathlength cuvette holder.

6.3.2 Disposable polystyrene cuvettes, pathlengh 1 cm, volume of about 4.5 ml.

6.3.3 Pipettors—Fixed-volume Oxford pipet (250 µl; 500 µl; 1000 µl); adjustable volume Oxford or equivalent pipettor 1–5 ml model, set to 2.50 ml.

6.3.4 Pipet tips for pipettors above.

6.3.5 Parafilm, 2 ° wide; cut into about 1'' squares.

*7.0 Reagents*

7.1 High purity water: All references to water in this method refer to high purity water (ASTM Type I water or equivalent). The water purity will dictate the lower limits of formaldehyde quantification.

7.2 Silica Gel: Silica gel shall be indicting type, 6–16 mesh. If the silica gel has been used previously, dry at 175 °C (350 °F) for 2 hours before using. New silica gel may be used as received. Alternatively, other types of desiccants (equivalent or better) may be used.

7.3 Crushed Ice: Quantities ranging from 10–50 lbs may be necessary during a sampling run, depending upon ambient temperature. Samples which have been taken must be stored and shipped cold; sufficient ice for this purpose must be allowed.

7.4 Quaternary ammonium compound stock solution: Prepare a stock solution of dodecyltrimethylammonium chloride (98 percent minimum assay, reagent grade) by dissolving 1.0 gram in 1000 ml water. This solution contains nominally 1000 µg/ml quaternary ammonium compound, and is used as a biocide for some sources which are prone to microbial contamination.

7.5 Pararosaniline: Weigh 0.16 grams pararosaniline (free base; assay of 95 percent or greater, C.I. 42500; Sigma P7632 has been found to be acceptable) into a 100 ml flask. Exercise care, since pararosaniline is a dye and will stain. Using a wash bottle with high-purity water, rinse the walls of the flask. Add no more than 25 ml water. Then,

carefully add 20 ml of concentrated hydrochloric acid to the flask. The flask will become warm after the addition of acid. Add a magnetic stir bar to the flask, cap, and place on a magnetic stirrer for approximately 4 hours. Then, add additional water so the total volume is 100 ml. This solution is stable for several months when stored tightly capped at room temperature.

7.6 Sodium sulfite: Weigh 0.10 grams anhydrous sodium sulfite into a 100 ml flask. Dilute to the mark with high purity water. Invert 15–20 times to mix and dissolve the sodium sulfite. This solution must be prepared fresh every day.

7.7 Formaldehyde standard solution: Pipet exactly 2.70 ml of 37 percent formaldehyde solution into a 1000 ml volumetric flask which contains about 500 ml of high-purity water. Dilute to the mark with high-purity water. This solution contains nominally 1000 µg/ml of formaldehyde, and is used to prepare the working formaldehyde standards. The exact formaldehyde concentration may be determined if needed by suitable modification of the sodium sulfite method (Reference: J.F. Walker, Formaldehyde (Third Edition), 1964.). The 1000 µg/ml formaldehyde stock solution is stable for at least a year if kept tightly closed, with the neck of the flask sealed with Parafilm. Store at room temperature.

7.8 Working formaldehyde standards: Pipet exactly 10.0 ml of the 1000 µg/ml formaldehyde stock solution into a 100 ml volumetric flask which is about half full of high-purity water. Dilute to the mark with high-purity water, and invert 15–20 times to mix thoroughly. This solution contains nominally 100 µg/ml formaldehyde. Prepare the working standards from this 100 µg/ml standard solution and using the Oxford pipets:

| Working standard, µ/mL | µL or 100 µg/mL solution | Volumetric flask volume (dilute to mark with water) |
|---|---|---|
| 0.250 | 250 | 100 |
| 0.500 | 500 | 100 |
| 1.00 | 1000 | 100 |
| 2.00 | 2000 | 100 |
| 3.00 | 1500 | 50 |

The 100 µg/ml stock solution is stable for 4 weeks if kept refrigerated between analyses. The working standards (0.25–3.00 µg/ml) should be prepared fresh every day, consistent with good laboratory practice for trace analysis. If the laboratory water is not of sufficient purity, it may be necessary to prepare the working standards every day. The laboratory must establish that the working standards are stable—DO NOT assume that your working standards are stable for more than a day unless you have verified this by actual testing for several series of working standards.

*8.0 Sample Collection*

8.1 Because of the complexity of this method, field personnel should be trained in and experienced with the test procedures in order to obtain reliable results.

8.2 Laboratory Preparation

8.2.1 All the components shall be maintained and calibrated according to the procedure described in APTD–0576, unless otherwise specified.

8.2.2 Weigh several 200 to 300 g portions of silica gel in airtight containers to the nearest 0.5 g. Record on each container the total weight of the silica gel plus containers. As an alternative to preweighing the silica gel, it may instead be weighed directly in the impinger or sampling holder just prior to train assembly.

8.3 Preliminary Field Determinations

8.3.1 Select the sampling site and the minimum number of sampling points according to EPA Method 1, 40 CFR part 60, appendix A, or other relevant criteria. Determine the stack pressure, temperature, and range of velocity heads using EPA Method 2, 40 CFR part 60, appendix A. A leak-check of the pitot lines according to Section 3.1 of EPA Method 2, 40 CFR part 60, appendix A, must be performed. Determine the stack gas moisture content using EPA Approximation Method 4,40 CFR part 60, appendix A, or its alternatives to establish estimates of isokinetic sampling rate settings. Determine the stack gas dry molecular weight, as described in EPA Method 2, 40 CFR part 60, appendix A, Section 3.6. If integrated EPA Method 3, 40 CFR part 60, appendix A, sampling is used for molecular weight determination, the integrated bag sample shall be taken simultaneously with, and for the same total length of time as, the sample run.

8.3.2 Select a nozzle size based on the range of velocity heads so that it is not necessary to change the nozzle size in order to maintain isokinetic sampling rates below 28 l/min (1.0 cfm). During the run do not change the nozzle. Ensure that the proper differential pressure gauge is chosen for the range of velocity heads encountered (see Section 2.2 of EPA Method 2, 40 CFR part 60, appendix A).

8.3.3 Select a suitable probe liner and probe length so that all traverse points can be sampled. For large stacks, to reduce the length of the probe, consider sampling from opposite sides of the stack.

8.3.4 A minimum of 30 cu ft of sample volume is suggested for emission sources with stack concentrations not greater than 23,000,000 ppbv. Additional sample volume shall be collected as necessitated by the capacity of the water reagent and analytical detection limit constraint. Reduced sample volume may be collected as long as the final concentration of formaldehyde in the stack

sample is greater than 10 (ten) times the detection limit.

8.3.5 Determine the total length of sampling time needed to obtain the identified minimum volume by comparing the anticipated average sampling rate with the volume requirement. Allocate the same time to all traverse points defined by EPA Method 1, 40 CFR part 60, appendix A. To avoid timekeeping errors, the length of time sampled at each traverse point should be an integer or an integer plus 0.5 min.

8.3.6 In some circumstances (e.g., batch cycles) it may be necessary to sample for shorter times at the traverse points and to obtain smaller gas-volume samples. In these cases, careful documentation must be maintained in order to allow accurate calculations of concentrations.

8.4 Preparation of Collection Train

8.4.1 During preparation and assembly of the sampling train, keep all openings where contamination can occur covered with Teflon™ film or aluminum foil until just prior to assembly or until sampling is about to begin.

8.4.2 Place 100 ml of water in each of the first two impingers, and leave the third impinger empty. If additional capacity is required for high expected concentrations of formaldehyde in the stack gas, 200 ml of water per impinger may be used or additional impingers may be used for sampling. Transfer approximately 200 to 300 g of preweighed silica gel from its container to the fourth impinger. Care should be taken to ensure that the silica gel is not entrained and carried out from the impinger during sampling. Place the silica gel container in a clean place for later use in the sample recovery. Alternatively, the weight of the silica gel plus impinger may be determined to the nearest 0.5 g and recorded.

8.4.3 With a glass or quartz liner, install the selected nozzle using a Viton-A O-ring when stack temperatures are <260 °C (500 °F) and a woven glass-fiber gasket when temperatures are higher. See APTD–0576 for details. Other connection systems utilizing either 316 stainless steel or Teflon™ ferrules may be used. Mark the probe with heat-resistant tape or by some other method to denote the proper distance into the stack or duct for each sampling point.

8.4.4 Assemble the train as shown in Figure 1. During assembly, a very light coating of silicone grease may be used on ground-glass joints of the impingers, but the silicone grease should be limited to the outer portion (see APTD–0576) of the ground-glass joints to minimize silicone grease contamination. If necessary, Teflon™ tape may be used to seal leaks. Connect all temperature sensors to an appropriate potentiometer/display unit. Check all temperature sensors at ambient temperatures.

8.4.5 Place crushed ice all around the impingers.

8.4.6 Turn on and set the probe heating system at the desired operating temperature. Allow time for the temperature to stabilize.

8.5 Leak-Check Procedures

8.5.1 Pre-test Leak-check: Recommended, but not required. If the tester elects to conduct the pre-test leak-check, the following procedure shall be used.

8.5.1.1 After the sampling train has been assembled, turn on and set probe heating system at the desired operating temperature. Allow time for the temperature to stabilize. If a Viton-a O-ring or other leak-free connection is used in assembling the probe nozzle to the probe liner, leak-check the train at the sampling site by plugging the nozzle and pulling a 381 mm Hg (15 in Hg) vacuum.

NOTE: A lower vacuum may be used, provided that the lower vacuum is not exceeded during the test.

If a woven glass fiber gasket is used, do not connect the probe to the train during the leak-check. Instead, leak-check the train by first attaching a carbon-filled leak-check impinger to the inlet and then plugging the inlet and pulling a 381 mm Hg (15 in Hg) vacuum. (A lower vacuum may be used if this lower vacuum is not exceeded during the test.) Next connect the probe to the train and leak-check at about 25 mm Hg (1 in Hg) vacuum. Alternatively, leak-check the probe with the rest of the sampling train in one step at 381 mm Hg (15 in Hg) vacuum. Leakage rates in excess of (a) 4 percent of the average sampling rate or (b) 0.00057 $m^3$/min (0.02 cfm), whichever is less, are unacceptable.

8.5.1.2 The following leak-check instructions for the sampling train described in APTD–0576 and APTD–0581 may be helpful. Start the pump with the fine-adjust valve fully open and coarse-valve completely closed. Partially open the coarse-adjust valve and slowly close the fine-adjust valve until the desired vacuum is reached. Do not reverse direction of the fine-adjust valve, as liquid will back up into the train. If the desired vacuum is exceeded, either perform the leak-check at this higher vacuum or end the leak-check, as described below, and start over.

8.5.1.3 When the leak-check is completed, first slowly remove the plug from the inlet to the probe. When the vacuum drops to 127 mm (5 in) Hg or less, immediately close the coarse-adjust valve. Switch off the pumping system and reopen the fine-adjust valve. Do not reopen the fine-adjust valve until the coarse-adjust valve has been closed to prevent the liquid in the impingers from being forced backward in the sampling line and silica gel from being entrained backward into the third impinger.

8.5.2 Leak-checks During Sampling Run:

8.5.2.1 If, during the sampling run, a component change (e.g., impinger) becomes necessary, a leak-check shall be conducted immediately after the interruption of sampling and before the change is made. The leak-check shall be done according to the procedure described in Section 10.3.3, except that it shall be done at a vacuum greater than or equal to the maximum value recorded up to that point in the test. If the leakage rate is found to be no greater than 0.0057 $m^3$/min (0.02 cfm) or 4 percent of the average sampling rate (whichever is less), the results are acceptable. If a higher leakage rate is obtained, the tester must void the sampling run.

NOTE: Any correction of the sample volume by calculation reduces the integrity of the pollutant concentration data generated and must be avoided.

8.5.2.2 Immediately after component changes, leak-checks are optional. If performed, the procedure described in section 8.5.1.1 shall be used.

8.5.3 Post-test Leak-check:

8.5.3.1 A leak-check is mandatory at the conclusion of each sampling run. The leak-check shall be done with the same procedures as the pre-test leak-check, except that the post-test leak-check shall be conducted at a vacuum greater than or equal to the maximum value reached during the sampling run. If the leakage rate is found to be no greater than 0.00057 $m^3$/min (0.02 cfm) or 4 percent of the average sampling rate (whichever is less), the results are acceptable. If, however, a higher leakage rate is obtained, the tester shall record the leakage rate and void the sampling run.

8.6 Sampling Train Operation

8.6.1 During the sampling run, maintain an isokinetic sampling rate to within 10 percent of true isokinetic, below 28 l/min (1.0 cfm). Maintain a temperature around the probe of 120 °C ±14 °C (248 ° ±25 °F).

8.6.2 For each run, record the data on a data sheet such as the one shown in Figure 2. Be sure to record the initial dry-gas meter reading. Record the dry-gas meter readings at the beginning and end of each sampling time increment, when changes in flow rates are made, before and after each leak-check, and when sampling is halted. Take other readings required by Figure 2 at least once at each sample point during each time increment and additional readings when significant adjustments (20 percent variation in velocity head readings) necessitate additional adjustments in flow rate. Level and zero the manometer. Because the manometer level and zero may drift due to vibrations and temperature changes, make periodic checks during the traverse.

Figure 2 - Formaldehyde Field Data

Plant . . . . . .
Location . . . . . .
Operator . . . . . .
Date . . . . . .
Run No . . . . . .
Sample box No . . . . . .
Meter box No . . . . . .
Meter ΔH . . . . . .
C Factor . . . . . .
Pitot tube coefficient, Op

Ambient temperature . . . . . .
Barometric pressure . . . . . .
Assumed moisture, percent . . . .
Probe length, m (ft) . . . . . .
Nozzle Identification No . . . .
Average calibrated nozzle
diameter, cm (in.) . . . . . .
Probe heater setting . . . . . .
Leak rate, $m^3$/min (cfm) . . . . . .
Probe liner material . . . . . .
Static pressure, mm Hg (in. Hg) .
Filter No. . . . . .

SCHEMATIC OF STACK CROSS SECTION

| Traverse point number | Sampling time (e) min. | Vacuum mm Hg (in. Hg) | Stack temperature (T) °C (°F) | Velocity head (ΔP) mm (in) $H_2O$ | Pressure differential across orifice meter mm $H_2O$ (in. $H_2O$) | Gas sample volume $m^3$ ($ft^3$) | Gas sample temperature at dry gas meter | | Filter holder temperature °C (°F) | Temperature of gas leaving condenser or last impinger °C (°F) |
|---|---|---|---|---|---|---|---|---|---|---|
| | | | | | | | Inlet °C (°F) | Outlet °C (°F) | | |
| | ..... | ..... | ..... | ..... | ..... | ..... | ..... | ..... | ..... | ..... |
| | ..... | ..... | ..... | ..... | ..... | ..... | ..... | ..... | ..... | ..... |
| | ..... | ..... | ..... | ..... | ..... | ..... | ..... | ..... | ..... | ..... |
| | ..... | ..... | ..... | ..... | ..... | ..... | ..... | ..... | ..... | ..... |
| | ..... | ..... | ..... | ..... | ..... | ..... | ..... | ..... | ..... | ..... |
| Total ..... | ..... | ..... | ..... | ..... | ..... | ..... | Avg. | Avg. | ..... | ..... |
| Average ..... | ..... | ..... | ..... | ..... | ..... | ..... | Avg. | ..... | ..... | ..... |

8.6.3 Clean the stack access ports prior to the test run to eliminate the chance of sampling deposited material. To begin sampling, remove the nozzle cap, verify that the probe heating system are at the specified temperature, and verify that the pitot tube and probe are properly positioned. Position the nozzle at the first traverse point, with the tip pointing directly into the gas stream. Immediately start the pump and adjust the flow to isokinetic conditions. Nomographs, which aid in the rapid adjustment of the isokinetic sampling rate without excessive computations, are available. These nomographs are designed for use when the Type S pitot tube coefficient is 0.84 ±0.02 and the stack gas equivalent density (dry molecular weight) is equal to 29 ±4. APTD–0576 details the procedure for using the nomographs. If the stack gas molecular weight and the pitot tube coefficient are outside the above ranges, do not use the nomographs unless appropriate steps are taken to compensate for the deviations.

8.6.4 When the stack is under significant negative pressure (equivalent to the height of the impinger stem), take care to close the coarse-adjust valve before inserting the probe into the stack in order to prevent liquid from backing up through the train. If necessary, a low vacuum on the train may have to be started prior to entering the stack.

8.6.5 When the probe is in position, block off the openings around the probe and stack access port to prevent unrepresentative dilution of the gas stream.

8.6.6 Traverse the stack cross section, as required by EPA Method 1, 40 CFR part 60, appendix A, being careful not to bump the probe nozzle into the stack walls when sampling near the walls or when removing or inserting the probe through the access port, in order to minimize the chance of extracting deposited material.

8.6.7 During the test run, make periodic adjustments to keep the temperature around the probe at the proper levels. Add more ice and, if necessary, salt, to maintain a temperature of <20 °C (68 °F) at the silica gel outlet.

8.6.8 A single train shall be used for the entire sampling run, except in cases where simultaneous sampling is required in two or more separate ducts or at two or more different locations within the same duct, or in cases where equipment failure necessitates a change of trains. An additional train or trains may also be used for sampling when the capacity of a single train is exceeded.

8.6.9 When two or more trains are used, separate analyses of components from each train shall be performed. If multiple trains have been used because the capacity of a single train would be exceeded, first impingers from each train may be combined, and second impingers from each train may be combined.

8.6.10 At the end of the sampling run, turn off the coarse-adjust valve, remove the probe and nozzle from the stack, turn off the pump, record the final dry gas meter reading, and conduct a post-test leak-check. Also, check the pitot lines as described in EPA Method 2, 40 CFR part 60, appendix A. The lines must pass this leak-check in order to validate the velocity-head data.

8.6.11 Calculate percent isokineticity (see Method 2) to determine whether the run was valid or another test should be made.

8.7 Sample Preservation and Handling

8.7.1 Samples from most sources applicable to this method have acceptable holding times using normal handling practices (shipping samples iced, storing in refrigerator at 2 °C until analysis). However, forming section stacks and other sources using waste water sprays may be subject to microbial contamination. For these sources, a biocide (quaternary ammonium compound solution) may be added to collected samples to improve sample stability and method ruggedness.

8.7.2 Sample holding time: Samples should be analyzed within 14 days of collection. Samples must be refrigerated/kept cold for the entire period preceding analysis. After

the samples have been brought to room temperature for analysis, any analyses needed should be performed on the same day. Repeated cycles of warming the samples to room temperature/refrigerating/rewarming, then analyzing again, etc., have not been investigated in depth to evaluate if analyte levels remain stable for all sources.

8.7.3 Additional studies will be performed to evaluate whether longer sample holding times are feasible for this method.

8.8 Sample Recovery

8.8.1 Preparation:

8.8.1.1 Proper cleanup procedure begins as soon as the probe is removed from the stack at the end of the sampling period. Allow the probe to cool. When the probe can be handled safely, wipe off all external particulate matter near the tip of the probe nozzle and place a cap over the tip to prevent losing or gaining particulate matter. Do not cap the probe tightly while the sampling train is cooling because a vacuum will be created, drawing liquid from the impingers back through the sampling train.

8.8.1.2 Before moving the sampling train to the cleanup site, remove the probe from the sampling train and cap the open outlet, being careful not to lose any condensate that might be present. Remove the umbilical cord from the last impinger and cap the impinger. If a flexible line is used, let any condensed water or liquid drain into the impingers. Cap off any open impinger inlets and outlets. Ground glass stoppers, Teflon™ caps, or caps of other inert materials may be used to seal all openings.

8.8.1.3 Transfer the probe and impinger assembly to an area that is clean and protected from wind so that the chances of contaminating or losing the sample are minimized.

8.8.1.4 Inspect the train before and during disassembly, and note any abnormal conditions.

8.8.1.5 Save a portion of the washing solution (high purity water) used for cleanup as a blank.

8.8.2 Sample Containers:

8.8.2.1 Container 1: Probe and Impinger Catches. Using a graduated cylinder, measure to the nearest ml, and record the volume of the solution in the first three impingers. Alternatively, the solution may be weighed to the nearest 0.5 g. Include any condensate in the probe in this determination. Transfer the combined impinger solution from the graduated cylinder into the polyethylene bottle. Taking care that dust on the outside of the probe or other exterior surfaces does not get into the sample, clean all surfaces to which the sample is exposed (including the probe nozzle, probe fitting, probe liner, first three impingers, and impinger connectors) with water. Use less than 400 ml for the entire waste (250 ml would be better, if possible). Add the rinse water to the sample container.

8.8.2.1.1 Carefully remove the probe nozzle and rinse the inside surface with water from a wash bottle. Brush with a bristle brush and rinse until the rinse shows no visible particles, after which make a final rinse of the inside surface. Brush and rinse the inside parts of the Swagelok (or equivalent) fitting with water in a similar way.

8.8.2.1.2 Rinse the probe liner with water. While squirting the water into the upper end of the probe, tilt and rotate the probe so that all inside surfaces will be wetted with water. Let the water drain from the lower end into the sample container. The tester may use a funnel (glass or polyethylene) to aid in transferring the liquid washes to the container. Follow the rinse with a bristle brush. Hold the probe in an inclined position, and squirt water into the upper end as the probe brush is being pushed with a twisting action through the probe. Hold the sample container underneath the lower end of the probe, and catch any water and particulate matter that is brushed from the probe. Run the brush through the probe three times or more. Rinse the brush with water and quantitatively collect these washings in the sample container. After the brushing, make a final rinse of the probe as describe above.

NOTE: Two people should clean the probe in order to minimize sample losses. Between sampling runs, brushes must be kept clean and free from contamination.

8.8.2.1.3 Rinse the inside surface of each of the first three impingers (and connecting tubing) three separate times. Use a small portion of water for each rinse, and brush each surface to which the sample is exposed with a bristle brush to ensure recovery of fine particulate matter. Make a final rinse of each surface and of the brush, using water.

8.8.2.1.4 After all water washing and particulate matter have been collected in the sample container, tighten the lid so the sample will not leak out when the container is shipped to the laboratory. Mark the height of the fluid level to determine whether leakage occurs during transport. Label the container clearly to identify its contents.

8.8.2.1.5 If the first two impingers are to be analyzed separately to check for breakthrough, separate the contents and rinses of the two impingers into individual containers. Care must be taken to avoid physical carryover from the first impinger to the second. Any physical carryover of collected moisture into the second impinger will invalidate a breakthrough assessment.

8.8.2.2 Container 2: Sample Blank. Prepare a blank by using a polyethylene container and adding a volume of water equal to the total volume in Container 1. Process the blank in the same manner as Container 1.

8.8.2.3 Container 3: Silica Gel. Note the color of the indicating silica gel to determine whether it has been completely spent

and make a notation of its condition. The impinger containing the silica gel may be used as a sample transport container with both ends sealed with tightly fitting caps or plugs. Ground-glass stoppers or Teflon™ caps maybe used. The silica gel impinger should then be labeled, covered with aluminum foil, and packaged on ice for transport to the laboratory. If the silica gel is removed from the impinger, the tester may use a funnel to pour the silica gel and a rubber policeman to remove the silica gel from the impinger. It is not necessary to remove the small amount of dust particles that may adhere to the impinger wall and are difficult to remove. Since the gain in weight is to be used for moisture calculations, do not use water or other liquids to transfer the silica gel. If a balance is available in the field, the spent silica gel (or silica gel plus impinger) may be weighed to the nearest 0.5 g.

8.8.2.4 Sample containers should be placed in a cooler, cooled by (although not in contact with) ice. Putting sample bottles in Zip-Lock™ bags can aid in maintaining the integrity of the sample labels. Sample containers should be placed vertically to avoid leakage during shipment. Samples should be cooled during shipment so they will be received cold at the laboratory. It is critical that samples be chilled immediately after recovery. If the source is susceptible to microbial contamination from wash water (e.g. forming section stack), add biocide as directed in section 8.2.5.

8.8.2.5 A quaternary ammonium compound can be used as a biocide to stabilize samples against microbial degradation following collection. Using the stock quaternary ammonium compound (QAC) solution; add 2.5 ml QAC solution for every 100 ml of recovered sample volume (estimate of volume is satisfactory) immediately after collection. The total volume of QAC solution must be accurately known and recorded, to correct for any dilution caused by the QAC solution addition.

8.8.3 Sample Preparation for Analysis 8.8.3.1 The sample should be refrigerated if the analysis will not be performed on the day of sampling. Allow the sample to warm at room temperature for about two hours (if it has been refrigerated) prior to analyzing.

8.8.3.2 Analyze the sample by the pararosaniline method, as described in Section 11. If the color-developed sample has an absorbance above the highest standard, a suitable dilution in high purity water should be prepared and analyzed.

*9.0 Quality Control*

9.1 Sampling: See EPA Manual 600/4–77–02b for Method 5 quality control.

9.2 Analysis: The quality assurance program required for this method includes the analysis of the field and method blanks, and procedure validations. The positive identification and quantitation of formaldehyde are dependent on the integrity of the samples received and the precision and accuracy of the analytical methodology. Quality assurance procedures for this method are designed to monitor the performance of the analytical methodology and to provide the required information to take corrective action if problems are observed in laboratory operations or in field sampling activities.

9.2.1 Field Blanks: Field blanks must be submitted with the samples collected at each sampling site. The field blanks include the sample bottles containing aliquots of sample recover water, and water reagent. At a minimum, one complete sampling train will be assembled in the field staging area, taken to the sampling area, and leak-checked at the beginning and end of the testing (or for the same total number of times as the actual sampling train). The probe of the blank train must be heated during the sample test. The train will be recovered as if it were an actual test sample. No gaseous sample will be passed through the blank sampling train.

9.2.2 Blank Correction: The field blank formaldehyde concentrations will be subtracted from the appropriate sample formaldehyde concentrations. Blank formaldehyde concentrations above 0.25 μg/ml should be considered suspect, and subtraction from the sample formaldehyde concentrations should be performed in a manner acceptable to the Administrator.

9.2.3 Method Blanks: A method blank must be prepared for each set of analytical operations, to evaluate contamination and artifacts that can be derived from glassware, reagents, and sample handling in the laboratory.

*10 Calibration*

10.1 Probe Nozzle: Probe nozzles shall be calibrated before their initial use in the field. Using a micrometer, measure the inside diameter of the nozzle to the nearest 0.025 mm (0.001 in). Make measurements at three separate places across the diameter and obtain the average of the measurements. The difference between the high and low numbers shall not exceed 0.1 mm (0.004 in). When the nozzle becomes nicked or corroded, it shall be repaired and calibrated, or replaced with a calibrated nozzle before use. Each nozzle must be permanently and uniquely identified.

10.2 Pitot Tube: The Type S pitot tube assembly shall be calibrated according to the procedure outlined in Section 4 of EPA Method 2, or assigned a nominal coefficient of 0.84 if it is not visibly nicked or corroded and if it meets design and intercomponent spacing specifications.

10.3 Metering System

10.3.1 Before its initial use in the field, the metering system shall be calibrated according to the procedure outlined in APTD–0576.

Instead of physically adjusting the dry-gas meter dial readings to correspond to the wet-test meter readings, calibration factors may be used to correct the gas meter dial readings mathematically to the proper values. Before calibrating the metering system, it is suggested that a leak-check be conducted. For metering systems having diaphragm pumps, the normal leak-check procedure will not delete leakages with the pump. For these cases, the following leak-check procedure will apply: Make a ten-minute calibration run at 0.00057 $m^3$/min (0.02 cfm). At the end of the run, take the difference of the measured wet-test and dry-gas meter volumes and divide the difference by 10 to get the leak rate. The leak rate should not exceed 0.00057 $m^3$/min (0.02 cfm).

10.3.2 After each field use, check the calibration of the metering system by performing three calibration runs at a single intermediate orifice setting (based on the previous field test). Set the vacuum at the maximum value reached during the test series. To adjust the vacuum, insert a valve between the wet-test meter and the inlet of the metering system. Calculate the average value of the calibration factor. If the calibration has changed by more than 5 percent, recalibrate the meter over the full range of orifice settings, as outlined in APTD–0576.

10.3.3 Leak-check of metering system: The portion of the sampling train from the pump to the orifice meter (see Figure 1) should be leak-checked prior to initial use and after each shipment. Leakage after the pump will result in less volume being recorded than is actually sampled. Use the following procedure: Close the main valve on the meter box. Insert a one-hole rubber stopper with rubber tubing attached into the orifice exhaust pipe. Disconnect and vent the low side of the orifice manometer. Close off the low side orifice tap. Pressurize the system to 13–18 cm (5–7 in) water column by blowing into the rubber tubing. Pinch off the tubing and observe the manometer for 1 min. A loss of pressure on the manometer indicates a leak in the meter box. Leaks must be corrected.

NOTE: If the dry-gas meter coefficient values obtained before and after a test series differ by >5 percent, either the test series must be voided or calculations for test series must be performed using whichever meter coefficient value (i.e., before or after) gives the lower value of total sample volume.

10.4 Probe Heater: The probe heating system must be calibrated before its initial use in the field according to the procedure outlined in APTD–0576. Probes constructed according to APTD–0581 need not be calibrated if the calibration curves in APTD–0576 are used.

10.5 Temperature gauges: Use the procedure in Section 4.3 of EPA Method 2 to calibrate in-stack temperature gauges. Dial thermometers, such as are used for the dry gas meter and condenser outlet, shall be calibrated against mercury-in-glass thermometers. An alternative mercury-free thermometer may be used if the thermometer is, at a minimum, equivalent in terms of performance or suitably effective for the specific temperature measurement application.

10.6 Barometer: Adjust the barometer initially and before each test series to agree to within ±2.5 mm Hg (0.1 in Hg) of the mercury barometer. Alternately, if a National Weather Service Station (NWSS) is located at the same altitude above sea level as the test site, the barometric pressure reported by the NWSS may be used.

10.7 Balance: Calibrate the balance before each test series, using Class S standard weights. The weights must be within ±0.5 percent of the standards, or the balance must be adjusted to meet these limits.

*11.0 Procedure for Analysis*

The working formaldehyde standards (0.25, 0.50, 1.0, 2.0, and 3.0 μg/ml) are analyzed and a calibration curve is calculated for each day's analysis. The standards should be analyzed first to ensure that the method is working properly prior to analyzing the samples. In addition, a sample of the high-purity water should also be analyzed and used as a ''0'' formaldehyde standard.

The procedure for analysis of samples and standards is identical: Using the pipet set to 2.50 ml, pipet 2.50 ml of the solution to be analyzed into a polystyrene cuvette. Using the 250 μl pipet, pipet 250 μl of the pararosaniline reagent solution into the cuvette. Seal the top of the cuvette with a Parafilm square and shake at least 30 seconds to ensure the solution in the cuvette is well-mixed. Peel back a corner of the Parafilm so the next reagent can be added. Using the 250 μl pipet, pipet 250 μl of the sodium sulfite reagent solution into the cuvette. Reseal the cuvette with the Parafilm, and again shake for about 30 seconds to mix the solution in the cuvette. Record the time of addition of the sodium sulfite and let the color develop at room temperature for 60 minutes. Set the spectrophotometer to 570 nm and set to read in Absorbance Units. The spectrophotometer should be equipped with a holder for the 1-cm pathlength cuvettes. Place cuvette(s) containing high-purity water in the spectrophotometer and adjust to read 0.000 AU.

After the 60 minutes color development period, read the standard and samples in the spectrophotometer. Record the absorbance reading for each cuvette. The calibration curve is calculated by linear regression, with the formaldehyde concentration as the ''x'' coordinate of the pair, and the absorbance reading as the ''y'' coordinate. The procedure is very reproducible, and typically will yield

values similar to these for the calibration curve:

Correlation Coefficient: 0.9999
Slope: 0.50
Y-Intercept: 0.090

The formaldehyde concentration of the samples can be found by using the trend-line feature of the calculator or computer program used for the linear regression. For example, the TI–55 calculators use the ''X'' key (this gives the predicted formaldehyde concentration for the value of the absorbance you key in for the sample). Multiply the formaldehyde concentration from the sample by the dilution factor, if any, for the sample to give the formaldehyde concentration of the original, undiluted, sample (units will be micrograms/ml).

11.1 Notes on the Pararosaniline Procedure

11.1.1 The pararosaniline method is temperature-sensitive. However, the small fluctuations typical of a laboratory will not significantly affect the results.

11.1.2 The calibration curve is linear to beyond 4 ''µg/ml'' formaldehyde, however, a research-grade spectrophotometer is required to reproducibly read the high absorbance values. Consult your instrument manual to evaluate the capability of the spectrophotometer.

11.1.3 The quality of the laboratory water used to prepare standards and make dilutions is critical. It is important that the cautions given in the Reagents section be observed. This procedure allows quantitation of formaldehyde at very low levels, and thus it is imperative to avoid contamination from other sources of formaldehyde and to exercise the degree of care required for trace analyses.

11.1.4 The analyst should become familiar with the operation of the Oxford or equivalent pipettors before using them for an analysis. Follow the instructions of the manufacturer; one can pipet water into a tared container on any analytical balance to check pipet accuracy and precision. This will also establish if the proper technique is being used. Always use a new tip for each pipetting operation.

11.1.5 This procedure follows the recommendations of ASTM Standard Guide D 3614, reading all solutions versus water in the reference cell. This allows the absorbance of the blank to be tracked on a daily basis. Refer to ASTM D 3614 for more information.

*12.0 Calculations*

Carry out calculations, retaining at least one extra decimal figure beyond that of the acquired data. Round off figures after final calculations.

12.1 Calculations of Total Formaldehyde

12.1.1 To determine the total formaldehyde in mg, use the following equation if biocide was not used:

Total mg formaldehyde=

$$C_d \times V \times DF \times 0.001 \ \text{mg/µg}$$

Where:

$C_d$ = measured conc. formaldehyde, µg/ml
V = total volume of stack sample, ml
DF = dilution factor

12.1.2 To determine the total formaldehyde in mg, use the following equation if biocide was used:

Total mg formaldehyde=

$$\frac{C_d \times V}{(V - B) \times DF \times 0.001 \ \text{mg/µg}}$$

Where:

$C_d$ = measured conc. formaldehyde, µg/ml
V = total volume of stack sample, ml
B = total volume of biocide added to sample, ml
DF = dilution factor

12.2 Formaldehyde concentration (mg/m$^3$) in stack gas. Determine the formaldehyde concentration (mg/m$^3$) in the stack gas using the following equation: Formaldehyde concentration (mg/m$^3$) =

$$\frac{K \times [\text{total formaldehyde, mg}]}{V_m(\text{std})}$$

Where:

K = 35.31 cu ft/m$^3$ for $V_m$ (std) in English units, or
K = 1.00 m$^3$/m$^3$ for $V_m$ (std) in metric units
$V_m$ (std) = volume of gas sample measured by a dry gas meter, corrected to standard conditions, dscm (dscf)

12.3 Average dry gas meter temperature and average orifice pressure drop are obtained from the data sheet.

12.4 Dry Gas Volume: Calculate $V_m$ (std) and adjust for leakage, if necessary, using the equation in Section 6.3 of EPA Method 5, 40 CFR part 60, appendix A.

12.5 Volume of Water Vapor and Moisture Content: Calculated the volume of water vapor and moisture content from equations 5–2 and 5–3 of EPA Method 5.

*13.0 Method Performance*

The precision of this method is estimated to be better than ±5 percent, expressed as ±the percent relative standard deviation.

*14.0 Pollution Prevention* [Reserved]

*15.0 Waste Management* [Reserved]

*16.0 References*

R.R. Miksch, et al., Analytical Chemistry, November 1981, 53 pp. 2118–2123.
J.F. Walker, Formaldehyde, Third Edition, 1964.

US EPA 40 CFR, part 60, Appendix A, Test Methods 1–5

METHOD 318—EXTRACTIVE FTIR METHOD FOR THE MEASUREMENT OF EMISSIONS FROM THE MINERAL WOOL AND WOOL FIBERGLASS INDUSTRIES

*1.0 Scope and Application*

This method has been validated and approved for mineral wool and wool fiberglass sources. This method may not be applied to other source categories without validation and approval by the Administrator according to the procedures in Test Method 301, 40 CFR part 63, appendix A. For sources seeking to apply FTIR to other source categories, Test Method 320 (40 CFR part 63, appendix A) may be utilized.

1.1 Scope. The analytes measured by this method and their CAS numbers are:

Carbon Monoxide 630–08–0
Carbonyl Sulfide 463–58–1
Formaldehyde 50–00–0
Methanol 1455–13–6
Phenol 108–95–2

1.2 Applicability

1.2.1 This method is applicable for the determination of formaldehyde, phenol, methanol, carbonyl sulfide (COS) and carbon monoxide (CO) concentrations in controlled and uncontrolled emissions from manufacturing processes using phenolic resins. The compounds are analyzed in the mid-infrared spectral region (about 400 to 4000 cm−1 or 25 to 2.5 μm). Suggested analytical regions are given below (Table 1). Slight deviations from these recommended regions may be necessary due to variations in moisture content and ammonia concentration from source to source.

TABLE 1—EXAMPLE ANALYTICAL REGIONS

| Compound | Analytical region (cm−1) $FL_m - FU_m$ | Potential interferants |
|---|---|---|
| Formaldehyde | 2840.93 – 2679.83 | Water, Methane. |
| Phenol | 1231.32 – 1131.47 | Water, Ammonia, Methane. |
| Methanol | 1041.56 – 1019.95 | Water, Ammonia. |
| COS[a] | 2028.4 – 2091.9 | Water, $CO_2$ CO. |
| CO[a] | 2092.1 – 2191.8 | Water, $CO_2$, COS. |

[a] Suggested analytical regions assume about 15 percent moisture and $CO_2$, and that COS and CO have about the same absorbance (in the range of 10 to 50 ppm). If CO and COS are hundreds of ppm or higher, then $CO_2$ and moisture interference is reduced. If CO or COS is present at high concentration and the other at low concentration, then a shorter cell pathlength may be necessary to measure the high concentration component.

1.2.2 This method does not apply when: (a) Polymerization of formaldehyde occurs, (b) moisture condenses in either the sampling system or the instrumentation, and (c) when moisture content of the gas stream is so high relative to the analyte concentrations that it causes severe spectral interference.

1.3 Method Range and Sensitivity

1.3.1 The analytical range is a function of instrumental design and composition of the gas stream. Theoretical detection limits depend, in part, on (a) the absorption coefficient of the compound in the analytical frequency region, (b) the spectral resolution, (c) interferometer sampling time, (d) detector sensitivity and response, and (e) absorption pathlength.

1.3.2 Practically, there is no upper limit to the range. The practical lower detection limit is usually higher than the theoretical value, and depends on (a) moisture content of the flue gas, (b) presence of interferants, and (c) losses in the sampling system. In general, a 22 meter pathlength cell in a suitable sampling system can achieve practical detection limits of 1.5 ppm for three compounds (formaldehyde, phenol, and methanol) at moisture levels up to 15 percent by volume. Sources with uncontrolled emissions of CO and COS may require a 4 meter pathlength cell due to high concentration levels. For these two compounds, make sure absorbance of highest concentration component is <1.0.

1.4 Data Quality Objectives

1.4.1 In designing or configuring the system, the analyst first sets the data quality objectives, i.e., the desired lower detection limit ($DL_i$) and the desired analytical uncertainty ($AU_i$) for each compound. The instrumental parameters (factors b, c, d, and e in Section 1.3.1) are then chosen to meet these requirements, using Appendix D of the FTIR Protocol.

1.4.2 Data quality for each application is determined, in part, by measuring the RMS (Root Mean Square) noise level in each analytical spectral region (Appendix C of the FTIR Protocol). The RMS noise is defined as the RMSD (Root Mean Square Deviation) of the absorbance values in an analytical region from the mean absorbance value of the region. Appendix D of the FTIR Protocol defines the $MAU_{im}$ (minimum analyte uncertainty of the $i^{th}$ analyte in the $m^{th}$ analytical region). The MAU is the minimum analyte concentration for which the analytical uncertainty limit ($AU_i$) can be maintained: if the measured analyte concentration is less than $MAU_i$, then data quality is unacceptable. Table 2 gives some example

DL and AU values along with calculated areas and MAU values using the protocol procedures.

TABLE 2—EXAMPLE PRE-TEST PROTOCOL CALCULATIONS

| Protocol value | Form | Phenol | Methanol | Protocol appendix |
|---|---|---|---|---|
| Reference concentration [a] (ppm-meters)/K | 3.016 | 3.017 | 5.064 | |
| Reference Band Area | 8.2544 | 16.6417 | 4.9416 | B |
| DL (ppm-meters)/K | 0.1117 | 0.1117 | 0.1117 | B |
| AU | 0.2 | 0.2 | 0.2 | B |
| CL | 0.02234 | 0.02234 | 0.02234 | B |
| FL | 2679.83 | 1131.47 | 1019.95 | B |
| FU | 2840.93 | 1231.32 | 1041.56 | B |
| FC | 2760.38 | 1181.395 | 1030.755 | B |
| AAI (ppm-meters)/K | 0.18440 | 0.01201 | 0.00132 | B |
| RMSD | 2.28E–03 | 1.21E–03 | 1.07E–03 | C |
| MAU (ppm-meters)/K | 4.45E–02 | 7.26E–03 | 4.68E–03 | D |
| MAU (ppm at 22) | 0.0797 | 0.0130 | 0.0084 | D |

[a] Concentration units are: ppm concentration of the reference sample (ASC), times the path length of the FTIR cell used when the reference spectrum was measured (meters), divided by the absolute temperature of the reference sample in Kelvin (K), or (ppm-meters)/K.

*2.0 Summary of Method*

2.1 Principle

2.1.1 Molecules are composed of chemically bonded atoms, which are in constant motion. The atomic motions result in bond deformations (bond stretching and bond-angle bending). The number of fundamental (or independent) vibrational motions depends on the number of atoms (N) in the molecule. At typical testing temperatures, most molecules are in the ground-state vibrational state for most of their fundamental vibrational motions. A molecule can undergo a transition from its ground state (for a particular vibration) to the first excited state by absorbing a quantum of light at a frequency characteristic of the molecule and the molecular motion. Molecules also undergo rotational transitions by absorbing energies in the far-infrared or microwave spectral regions. Rotational transition absorbencies are superimposed on the vibrational absorbencies to give a characteristic shape to each rotational-vibrational absorbance ''band.''

2.1.2 Most molecules exhibit more than one absorbance band in several frequency regions to produce an infrared spectrum (a characteristic pattern of bands or a ''fingerprint'') that is unique to each molecule. The infrared spectrum of a molecule depends on its structure (bond lengths, bond angles, bond strengths, and atomic masses). Even small differences in structure can produce significantly different spectra.

2.1.3 Spectral band intensities vary with the concentration of the absorbing compound. Within constraints, the relationship between absorbance and sample concentration is linear. Sample spectra are compared to reference spectra to determine the species and their concentrations.

2.2 Sampling and Analysis

2.2.1 Flue gas is continuously extracted from the source, and the gas or a portion of the gas is conveyed to the FTIR gas cell, where a spectrum of the flue gas is recorded. Absorbance band intensities are related to sample concentrations by Beer's Law.

$$A_v = \sum a_i b c_i \qquad (6)$$

Where:

$A_n$ = absorbance of the $i^{th}$ component at the given frequency, ν.

a = absorption coefficient of the $i^{th}$ component at the frequency, ν.

b = path length of the cell.

c = concentration of the $i^{th}$ compound in the sample at frequency ν.

2.2.2 After identifying a compound from the infrared spectrum, its concentration is determined by comparing band intensities in the sample spectrum to band intensities in ''reference spectra'' of the formaldehyde, phenol, methanol, COS and CO. These reference spectra are available in a permanent soft copy from the EPA spectral library on the EMTIC bulletin board. The source may also prepare reference spectra according to Section 4.5 of the FTIR Protocol.

NOTE: Reference spectra not prepared according to the FTIR Protocol are not acceptable for use in this test method. Documentation detailing the FTIR Protocol steps used in preparing any non-EPA reference spectra shall be included in each test report submitted by the source.

2.3 Operator Requirements. The analyst must have some knowledge of source sampling and of infrared spectral patterns to operate the sampling system and to choose a

suitable instrument configuration. The analyst should also understand FTIR instrument operation well enough to choose an instrument configuration consistent with the data quality objectives.

*3.0 Definitions*

See Appendix A of the *FTIR* Protocol.

*4.0 Interferences*

4.1 Analytical (or Spectral) Interferences. Water vapor. High concentrations of ammonia (hundreds of ppm) may interfere with the analysis of low concentrations of methanol (1 to 5 ppm). For CO, carbon dioxide and water may be interferants. In cases where COS levels are low relative to CO levels, CO and water may be interferants.

4.2 Sampling System Interferences. Water, if it condenses, and ammonia, which reacts with formaldehyde.

*5.0 Safety*

5.1 Formaldehyde is a suspected carcinogen; therefore, exposure to this compound must be limited. Proper monitoring and safety precautions must be practiced in any atmosphere with potentially high concentrations of CO.

5.2 This method may involve sampling at locations having high positive or negative pressures, high temperatures, elevated heights, high concentrations of hazardous or toxic pollutants, or other diverse sampling conditions. It is the responsibility of the tester(s) to ensure proper safety and health practices, and to determine the applicability of regulatory limitations before performing this test method.

*6.0 Equipment and Supplies*

The equipment and supplies are based on the schematic of a sampling train shown in Figure 1. Either the evacuated or purged sampling technique may be used with this sampling train. Alternatives may be used, provided that the data quality objectives of this method are met.

6.1 Sampling Probe. Glass, stainless steel, or other appropriate material of sufficient length and physical integrity to sustain heating, prevent adsorption of analytes, and to reach gas sampling point.

6.2 Particulate Filters. A glass wool plug (optional) inserted at the probe tip (for large particulate removal) and a filter rated at 1-micron (e.g., Balston™) for fine particulate removal, placed immediately after the heated probe.

6.3 Sampling Line/Heating System. Heated (maintained at 250 ±25 degrees F) stainless steel, Teflon™, or other inert material that does not adsorb the analytes, to transport the sample to analytical system.

6.4 Stainless Steel Tubing. Type 316, e.g., ⅜ in. diameter, and appropriate length for heated connections.

6.5 Gas Regulators. Appropriate for individual gas cylinders.

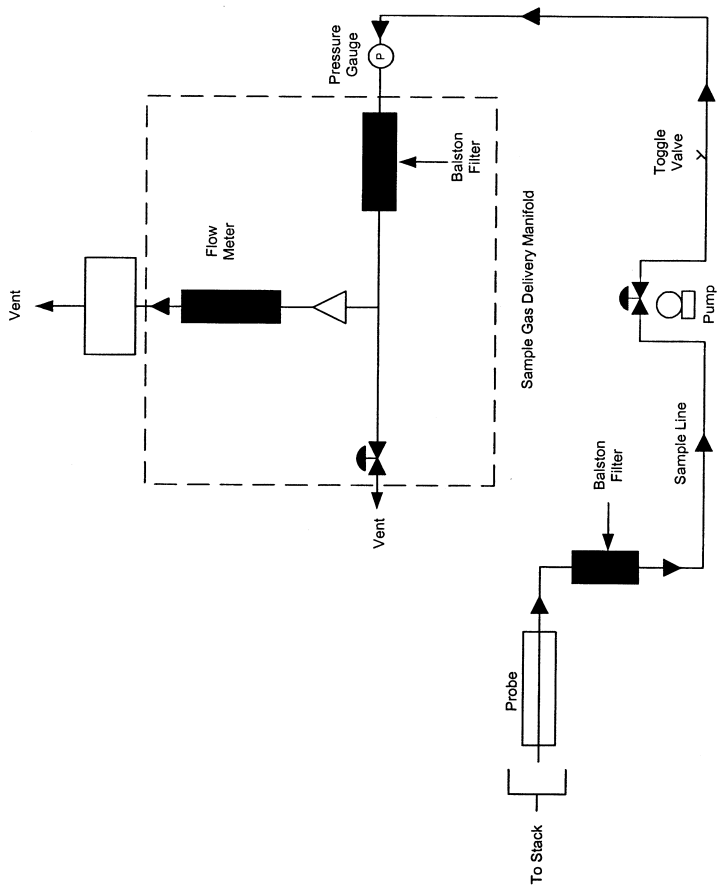


**Figure 1. The extractive FTIR sampling system.**

6.6 Teflon™ Tubing. Diameter (e.g., ⅜ in.) and length suitable to connect cylinder regulators.

6.7 Sample Pump. A leak-free pump (e.g., KNF™), with by-pass valve, capable of pulling sample through entire sampling system at a rate of about 10 to 20 L/min. If placed before the analytical system, heat the pump and use a pump fabricated from materials non-reactive to the target pollutants. If the pump is located after the instrument, systematically record the sample pressure in the gas cell.

6.8 Gas Sample Manifold. A heated manifold that diverts part of the sample stream to the analyzer, and the rest to the by-pass discharge vent or other analytical instrumentation.

6.9 Rotameter. A calibrated 0 to 20 L/min range rotameter.

6.10 FTIR Analytical System. Spectrometer and detector, capable of measuring formaldehyde, phenol, methanol, COS and CO to the predetermined minimum detectable level. The system shall include a personal computer with compatible software that provides real-time updates of the spectral profile during sample collection and spectral collection.

6.11 FTIR Cell Pump. Required for the evacuated sampling technique, capable of evacuating the FTIR cell volume within 2 minutes. The FTIR cell pump should allow the operator to obtain at least 8 sample spectra in 1 hour.

6.12 Absolute Pressure Gauge. Heatable and capable of measuring pressure from 0 to 1000 mmHg to within ±2.5 mmHg (e.g., Baratron™).

6.13 Temperature Gauge. Capable of measuring the cell temperature to within ±2 °C.

*7.0 Reagents and Standards*

7.1 Ethylene (Calibration Transfer Standard). Obtain NIST traceable (or Protocol) cylinder gas.

7.2 Nitrogen. Ultra high purity (UHP) grade.

7.3 Reference Spectra. Obtain reference spectra for the target pollutants at concentrations that bracket (in ppm-meter/K) the emission source levels. Also, obtain reference spectra for $SF_6$ and ethylene. Suitable concentrations are 0.0112 to 0.112 (ppm-meter)/K for $SF_6$ and 5.61 (ppm-meter)/K or less for ethylene. The reference spectra shall meet the criteria for acceptance outlined in Section 2.2.2. The optical density (ppm-meters/K) of the reference spectrum must match the optical density of the sample spectrum within (less than) 25 percent.

*8.0 Sample Collection, Preservation, and Storage*

Sampling should be performed in the following sequence: Collect background, collect CTS spectrum, collect samples, collect post-test CTS spectrum, verify that two copies of all data were stored on separate computer media.

8.1 Pretest Preparations and Evaluations. Using the procedure in Section 4.0 of the *FTIR Protocol*, determine the optimum sampling system configuration for sampling the target pollutants. Table 2 gives some example values for AU, DL, and MAU. Based on a study (Reference 1), an FTIR system using 1 $cm^{-1}$ resolution, 22 meter path length, and a broad band MCT detector was suitable for meeting the requirements in Table 2. Other factors that must be determined are:

a. Test requirements: $AU_i$, $CMAX_i$, $DL_i$, $OFU_i$, and $t_{AN}$ for each.

b. Interferants: See Table 1.

c. Sampling system: $L_S'$, $P_{min}$, $P_S'$, $T_S'$, $t_{SS}$, $V_{SS}$; fractional error, MIL.

d. Analytical regions: 1 through $N_m$, $FL_m$, $FC_m$, and $FU_m$, plus interferants, $FFU_m$, $FFL_m$, wavenumber range FNU to FNL. See Tables 1 and 2.

8.1.1 If necessary, sample and acquire an initial spectrum. Then determine the proper operational pathlength of the instrument to obtain non-saturated absorbances of the target analytes.

8.1.2 Set up the sampling train as shown in Figure 1.

8.2 Sampling System Leak-check. Leak-check from the probe tip to pump outlet as follows: Connect a 0- to 250-mL/min rate meter (rotameter or bubble meter) to the outlet of the pump. Close off the inlet to the probe, and note the leakage rate. The leakage rate shall be ≤200 mL/min.

8.3 Analytical System Leak-check.

8.3.1 For the evacuated sample technique, close the valve to the FTIR cell, and evacuate the absorption cell to the minimum absolute pressure $P_{min}$. Close the valve to the pump, and determine the change in pressure $\Delta P_v$ after 2 minutes.

8.3.2 For both the evacuated sample and purging techniques, pressurize the system to about 100 mmHg above atmospheric pressure. Isolate the pump and determine the change in pressure $\Delta P_p$ after 2 minutes.

8.3.3 Measure the barometric pressure, $P_b$ in mmHg.

8.3.4 Determine the percent leak volume $\%V_L$ for the signal integration time $t_{SS}$ and for $\Delta P_{max}$, i.e., the larger of $\Delta P_v$ or $\Delta P_p$, as follows:

$$\%V_L = 50\, t_{SS} \frac{\Delta P_{max}}{P_{SS}} \qquad (2)$$

Where:

50 = 100% divided by the leak-check time of 2 minutes.

8.3.5 Leak volumes in excess of 4 percent of the sample system volume $V_{SS}$ are unacceptable.

8.4 Background Spectrum. Evacuate the gas cell to ≤5 mmHg, and fill with dry nitrogen gas to ambient pressure. Verify that no significant amounts of absorbing species (for example water vapor and $CO_2$) are present. Collect a background spectrum, using a signal averaging period equal to or greater than the averaging period for the sample spectra. Assign a unique file name to the background spectrum. Store the spectra of the background interferogram and processed single-beam background spectrum on two separate computer media (one is used as the back-up). If continuous sampling will be used during sample collection, collect the background spectrum with nitrogen gas flowing through the cell at the same pressure and temperature as will be used during sampling.

8.5 Pre-Test Calibration Transfer Standard. Evacuate the gas cell to ≤5 mmHg absolute pressure, and fill the FTIR cell to atmospheric pressure with the CTS gas. Or, purge the cell with 10 cell volumes of CTS gas. Record the spectrum. If continuous sampling will be used during sample collection, collect the CTS spectrum with CTS gas flowing through the cell at the same pressure and temperature as will be used during sampling.

8.6 Samples

8.6.1 Evacuated Samples. Evacuate the absorbance cell to ≤5 mmHg absolute pressure. Fill the cell with flue gas to ambient pressure and record the spectrum. Before taking the next sample, evacuate the cell until no further evidence of absorption exists. Repeat this procedure to collect at least 8 separate spectra (samples) in 1 hour.

8.6.2 Purge Sampling. Purge the FTIR cell with 10 cell volumes of flue gas and at least for about 10 minutes. Discontinue the gas cell purge, isolate the cell, and record the sample spectrum and the pressure. Before

taking the next sample, purge the cell with 10 cell volumes of flue gas.

8.6.3 Continuous Sampling. Spectra can be collected continuously while the FTIR cell is being purged. The sample integration time, $t_{ss}$, the sample flow rate through the FTIR gas cell, and the total run time must be chosen so that the collected data consist of at least 10 spectra with each spectrum being of a separate cell volume of flue gas. More spectra can be collected over the run time and the total run time (and number of spectra) can be extended as well.

8.7 Sampling QA, Data Storage and Reporting

8.7.1 Sample integration times should be sufficient to achieve the required signal-to-noise ratios. Obtain an absorbance spectrum by filling the cell with nitrogen. Measure the RMSD in each analytical region in this absorbance spectrum. Verify that the number of scans is sufficient to achieve the target MAU (Table 2).

8.7.2 Identify all sample spectra with unique file names.

8.7.3 Store on two separate computer media a copy of sample interferograms and processed spectra. The data shall be available to the Administrator on request for the length of time specified in the applicable regulation.

8.7.4 For each sample spectrum, document the sampling conditions, the sampling time (while the cell was being filled), the time the spectrum was recorded, the instrumental conditions (path length, temperature, pressure, resolution, integration time), and the spectral file name. Keep a hard copy of these data sheets.

8.8 Signal Transmittance. While sampling, monitor the signal transmittance through the instrumental system. If signal transmittance (relative to the background) drops below 95 percent in any spectral region where the sample does not absorb infrared energy, obtain a new background spectrum.

8.9 Post-run CTS. After each sampling run, record another CTS spectrum.

8.10 Post-test QA

8.10.1 Inspect the sample spectra immediately after the run to verify that the gas matrix composition was close to the expected (assumed) gas matrix.

8.10.2 Verify that the sampling and instrumental parameters were appropriate for the conditions encountered. For example, if the moisture is much greater than anticipated, it will be necessary to use a shorter path length or dilute the sample.

8.10.3 Compare the pre and post-run CTS spectra. They shall agree to within −5 percent. See FTIR Protocol, Appendix E.

*9.0 Quality Control*

Follow the quality assurance procedures in the method, including the analysis of pre and post-run calibration transfer standards (Sections 8.5 and 8.9) and the post-test quality assurance procedures in Section 8.10.

*10.0 Calibration and Standardization*

10.1 Signal-to-Noise Ratio (S/N). The S/N shall be sufficient to meet the MAU in each analytical region.

10.2 Absorbance Pathlength. Verify the absorbance path length by comparing CTS spectra to reference spectra of the calibration gas(es). See FTIR Protocol, Appendix E.

10.3 Instrument Resolution. Measure the line width of appropriate CTS band(s) and compare to reference CTS spectra to verify instrumental resolution.

10.4 Apodization Function. Choose appropriate apodization function. Determine any appropriate mathematical transformations that are required to correct instrumental errors by measuring the CTS. Any mathematical transformations must be documented and reproducible.

10.5 FTIR Cell Volume. Evacuate the cell to ≤5 mmHg. Measure the initial absolute temperature ($T_i$) and absolute pressure ($P_i$). Connect a wet test meter (or a calibrated dry gas meter), and slowly draw room air into the cell. Measure the meter volume ($V_m$), meter absolute temperature ($T_m$), and meter absolute pressure ($P_m$), and the cell final absolute temperature ($T_f$) and absolute pressure ($P_f$). Calculate the FTIR cell volume $V_{ss}$, including that of the connecting tubing, as follows:

$$V_{SS} = \frac{V_m \frac{P_m}{T_m}}{\left[\frac{P_f}{T_f} - \frac{P_i}{T_i}\right]} \qquad (8)$$

As an alternative to the wet test meter/calibrated dry gas meter procedure, measure the inside dimensions of the cell cylinder and calculate its volume.

*11.0 Procedure*

Refer to Sections 4.6–4.11, Sections 5, 6, and 7, and the appendices of the FTIR Protocol.

*12.0 Data Analysis and Calculations*

a. Data analysis is performed using appropriate reference spectra whose concentrations can be verified using CTS spectra. Various analytical programs are available to relate sample absorbance to a concentration standard. Calculated concentrations should be verified by analyzing spectral baselines after mathematically subtracting scaled reference spectra from the sample spectra. A full description of the data analysis and calculations may be found in the FTIR Protocol (Sections 4.0, 5.0, 6.0 and appendices).

b. Correct the calculated concentrations in sample spectra for differences in absorption

pathlength between the reference and sample spectra by:

$$C_{corr} = \left[\frac{L_r}{L_s}\right]\left[\frac{T_s}{T_r}\right]C_{calc} \qquad (9)$$

Where:

$C_{corr}$ = The pathlength corrected concentration.

$C_{calc}$ = The initial calculated concentration (output of the Multicomp program designed for the compound).

$L_r$ = The pathlength associated with the reference spectra.

$L_s$ = The pathlength associated with the sample spectra.

$T_s$ = The absolute temperature (K) of the sample gas.

$T_r$ = The absolute gas temperature (K) at which reference spectra were recorded.

*13.0 Reporting and Recordkeeping*

All interferograms used in determining source concentration shall be stored for the period of time required in the applicable regulation. The Administrator has the option of requesting the interferograms recorded during the test in electronic form as part of the test report.

*14.0 Method Performance*

Refer to the FTIR Protocol.

*15.0 Pollution Prevention* [Reserved]

*16.0 Waste Management*

Laboratory standards prepared from the formaldehyde and phenol are handled according to the instructions in the materials safety data sheets (MSDS).

*17.0 References*

(1) ''Field Validation Test Using Fourier Transform Infrared (FTIR) Spectrometry To Measure Formaldehyde, Phenol and Methanol at a Wool Fiberglass Production Facility.'' Draft. U.S. Environmental Protection Agency Report, Entropy, Inc., EPA Contract No. 68D20163, Work Assignment I–32, December 1994 (docket item II-A-13).

(2) ''Method 301—Field Validation of Pollutant Measurement Methods from Various Waste Media,'' 40 CFR part 63, appendix A.

METHOD 319—DETERMINATION OF FILTRATION EFFICIENCY FOR PAINT OVERSPRAY ARRESTORS

*1.0 Scope and Application*

1.1 This method applies to the determination of the initial, particle size dependent, filtration efficiency for paint arrestors over the particle diameter range from 0.3 to 10 μm. The method applies to single and multiple stage paint arrestors or paint arrestor media. The method is applicable to efficiency determinations from 0 to 99 percent. Two test aerosols are used—one liquid phase and one solid phase. Oleic acid, a low-volatility liquid (CAS Number 112–80–1), is used to simulate the behavior of wet paint overspray. The solid-phase aerosol is potassium chloride salt (KCl, CAS Number 7447–40–7) and is used to simulate the behavior of a dry overspray. The method is limited to determination of the initial, clean filtration efficiency of the arrestor. Changes in efficiency (either increase or decrease) due to the accumulation of paint overspray on and within the arrestor are not evaluated.

1.2 Efficiency is defined as 1—Penetration (e.g., 70 percent efficiency is equal to 0.30 penetration). Penetration is based on the ratio of the downstream particle concentration to the upstream concentration. It is often more useful, from a mathematical or statistical point of view, to discuss the upstream and downstream counts in terms of penetration rather than the derived efficiency value. Thus, this document uses both penetration and efficiency as appropriate.

1.3 For a paint arrestor system or subsystem which has been tested by this method, adding additional filtration devices to the system or subsystem shall be assumed to result in an efficiency of at least that of the original system without the requirement for additional testing. (For example, if the final stage of a three-stage paint arrestor system has been tested by itself, then the addition of the other two stages shall be assumed to maintain, as a minimum, the filtration efficiency provided by the final stage alone. Thus, in this example, if the final stage has been shown to meet the filtration requirements of Table 1 of §63.745 of subpart GG, then the final stage in combination with any additional paint arrestor stages also passes the filtration requirements.)

*2.0 Summary of Method*

2.1 This method applies to the determination of the fractional (i.e., particle-size dependent) aerosol penetration of several types of paint arrestors. Fractional penetration is computed from aerosol concentrations measured upstream and downstream of an arrestor installed in a laboratory test rig. The aerosol concentrations upstream and downstream of the arrestors are measured with an aerosol analyzer that simultaneously counts and sizes the particles in the aerosol stream. The aerosol analyzer covers the particle diameter size range from 0.3 to 10 μm in a minimum of 12 contiguous sizing channels. Each sizing channel covers a narrow range of particle diameters. For example, Channel 1 may cover from 0.3 to 0.4 μm, Channel 2 from 0.4 to 0.5 μm, * * * By taking the ratio of the

downstream to upstream counts on a channel by channel basis, the penetration is computed for each of the sizing channels.

2.2 The upstream and downstream aerosol measurements are made while injecting the test aerosol into the air stream upstream of the arrestor (ambient aerosol is removed with HEPA filters on the inlet of the test rig). This test aerosol spans the particle size range from 0.3 to 10 μm and provides sufficient upstream concentration in each of the optical particle counter (OPC) sizing channels to allow accurate calculation of penetration, down to penetrations of approximately 0.01 (i.e., 1 percent penetration; 99 percent efficiency). Results are presented as a graph and a data table showing the aerodynamic particle diameter and the corresponding fractional efficiency.

*3.0 Definitions*

Aerodynamic Diameter—diameter of a unit density sphere having the same aerodynamic properties as the particle in question.

Efficiency is defined as equal to 1—Penetration.

Optical Particle Counter (OPC)—an instrument that counts particles by size using light scattering. An OPC gives particle diameters based on size, index of refraction, and shape.

Penetration—the fraction of the aerosol that penetrates the filter at a given particle diameter. Penetration equals the downstream concentration divided by the upstream concentration.

*4.0 Interferences*

4.1 The influence of the known interferences (particle losses) are negated by correction of the data using blanks.

*5.0 Safety*

5.1 There are no specific safety precautions for this method above those of good laboratory practice. This standard does not purport to address all of the safety problems, if any, associated with its use. It is the responsibility of the user of this method to establish appropriate safety and health practices and determine the applicability of regulatory limitations prior to use.

*6.0 Equipment and Supplies*

6.1 Test Facility. A schematic diagram of a test duct used in the development of the method is shown in Figure 319–1.

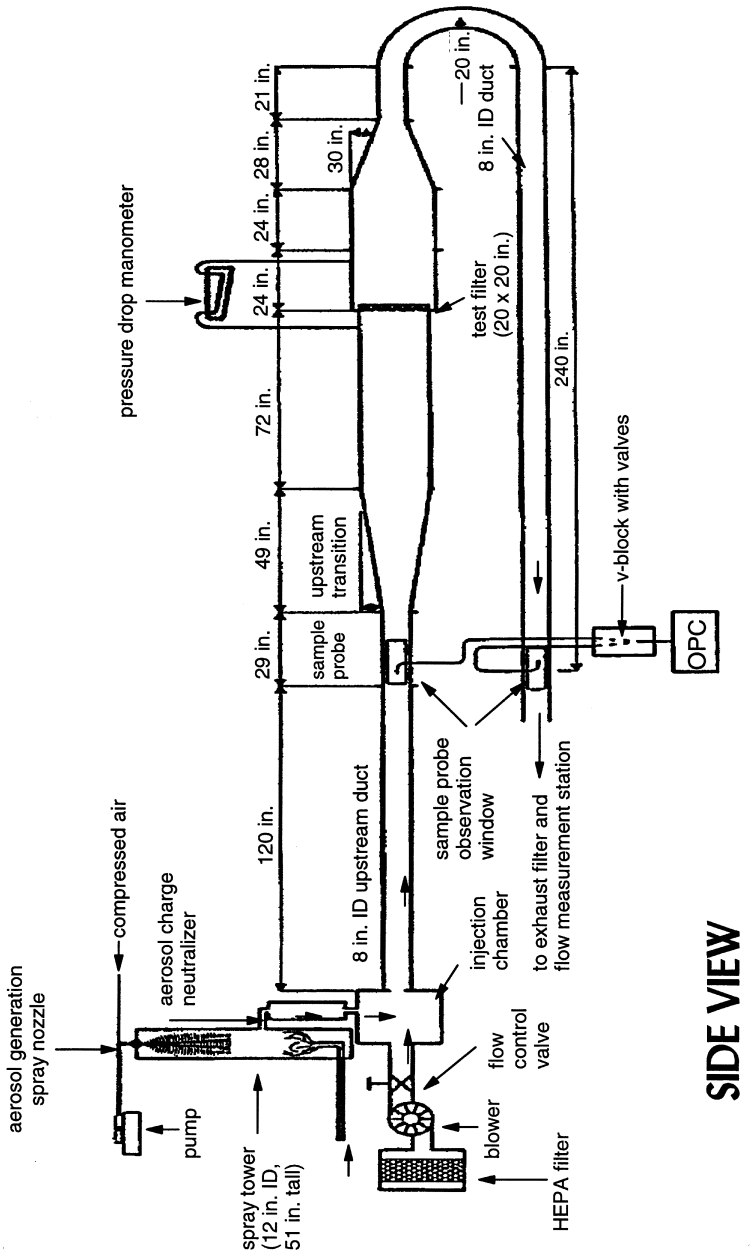


Figure 319-1. Schematic illustration of the fractional efficiency test rig.

6.1.1 The test section, paint spray section, and attached transitions are constructed of stainless and galvanized steel. The upstream and downstream ducting is 20 cm diameter polyvinyl chloride (PVC). The upstream transition provides a 7 ° angle of expansion to provide a uniform air flow distribution to the paint arrestors. Aerosol concentration is

measured upstream and downstream of the test section to obtain the challenge and penetrating aerosol concentrations, respectively. Because the downstream ducting runs back under the test section, the challenge and penetrating aerosol taps are located physically near each other, thereby facilitating aerosol sampling and reducing sample-line length. The inlet nozzles of the upstream and downstream aerosol probes are designed to yield isokinetic sampling conditions.

6.1.2 The configuration and dimensions of the test duct can deviate from those of Figure 319–1 provided that the following key elements are maintained: the test duct must meet the criteria specified in Table 319–1; the inlet air is HEPA filtered; the blower is on the upstream side of the duct thereby creating a positive pressure in the duct relative to the surrounding room; the challenge air has a temperature between 50 ° and 100 °F and a relative humidity of less than 65 percent; the angle of the upstream transition (if used) to the paint arrestor must not exceed 7 °; the angle of the downstream transition (if used) from the paint arrestor must not exceed 30 °; the test duct must provide a means for mixing the challenge aerosol with the upstream flow (in lieu of any mixing device, a duct length of 15 duct diameters fulfills this requirement); the test duct must provide a means for mixing any penetrating aerosol with the downstream flow (in lieu of any mixing device, a duct length of 15 duct diameters fulfills this requirement); the test section must provide a secure and leak-free mounting for single and multiple stage arrestors; and the test duct may utilize a 180 ° bend in the downstream duct.

TABLE 319–1—QC CONTROL LIMITS

| h | Frequency and description | Control limits |
|---|---|---|
| OPC zero count | Each Test. OPC samples HEPA-filtered air. | <50 counts per minute. |
| OPC sizing accuracy check | Daily. Sample aerosolized PSL spheres | Peak of distribution should be in correct OPC channel. |
| Minimum counts per channel for challenge aerosol. | Each Test | Minimum total of 500 particle counts per channel. |
| Maximum particle concentration | Each Test. Needed to ensure OPC is not overloaded. | <10% of manufacturer's claimed upper limit corresponding to a 10% count error. |
| Standard Deviation of Penetration | Computed for each test based on the CV of the upstream and downstream counts. | <0.10 for 0.3 to 3 μm diameter.<br><0.30 for >3 μm diameter. |
| 0% Penetration | Monthly | <0.01. |
| 100% Penetration—KCl | Triplicate tests performed immediately before, during, or after triplicate arrestor tests. | 0.3 to 1 μm: 0.90 to 1.10.<br>1 to 3 μm: 0.75 to 1.25.<br>3 to 10 μm: 0.50 to 1.50. |
| 100% Penetration—Oleic Acid | Triplicate tests performed immediately before, during, or after triplicate arrestor tests. | 0.3 to 1 μm: 0.90 to 1.10.<br>1 to 3 μm: 0.75 to 1.25.<br>3 to 10 μm: 0.50 to 1.50. |

6.2 Aerosol Generator. The aerosol generator is used to produce a stable aerosol covering the particle size range from 0.3 to 10 μm diameter. The generator used in the development of this method consists of an air atomizing nozzle positioned at the top of a 0.30–m (12-in.) diameter, 1.3–m (51-in.) tall, acrylic, transparent, spray tower. This tower allows larger sized particles, which would otherwise foul the test duct and sample lines, to fall out of the aerosol. It also adds drying air to ensure that the KCl droplets dry to solid salt particles. After generation, the aerosol passes through an aerosol neutralizer (Kr85 radioactive source) to neutralize any electrostatic charge on the aerosol (electrostatic charge is an unavoidable consequence of most aerosol generation methods). To improve the mixing of the aerosol with the air stream, the aerosol is injected counter to the airflow. Generators of other designs may be used, but they must produce a stable aerosol concentration over the 0.3 to 10 μm diameter size range; provide a means of ensuring the complete drying of the KCl aerosol; and utilize a charge neutralizer to neutralize any electrostatic charge on the aerosol. The resultant challenge aerosol must meet the minimum count per channel and maximum concentration criteria of Table 319–1.

6.3 Installation of Paint Arrestor. The paint arrestor is to be installed in the test duct in a manner that precludes air bypassing the arrestor. Since arrestor media are often sold unmounted, a mounting frame may be used to provide back support for the media in addition to sealing it into the duct. The mounting frame for 20 in. × 20 in. arrestors will have minimum open internal dimensions of 18 in. square. Mounting frames for 24 in. × 24 in. arrestors will have minimum open internal dimensions of 22 in. square. The open internal dimensions of the mounting frame shall not be less than 75 percent of the approach duct dimensions.

6.4 Optical Particle Counter. The upstream and downstream aerosol concentrations are measured with a high-resolution optical particle counter (OPC). To ensure comparability of test results, the OPC shall utilize an optical design based on wide-angle light scattering and provided a minimum of 12 contiguous particle sizing channels from 0.3 to 10 µm diameter (based on response to PSL) where, for each channel, the ratio of the diameter corresponding to the upper channel bound to the lower channel bound must not exceed 1.5.

6.5 Aerosol Sampling System. The upstream and downstream sample lines must be made of rigid electrically-grounded metallic tubing having a smooth inside surface, and they must be rigidly secured to prevent movement during testing. The upstream and downstream sample lines are to be nominally identical in geometry. The use of a short length (100 mm maximum) of straight flexible tubing to make the final connection to the OPC is acceptable. The inlet nozzles of the upstream and downstream probes must be sharp-edged and of appropriate entrance diameter to maintain isokinetic sampling within 20 percent of the air velocity.

6.5.1 The sampling system may be designed to acquire the upstream and downstream samples using (a) sequential upstream-downstream sampling with a single OPC, (b) simultaneous upstream and downstream sampling with two OPC's, or (c) sequential upstream-downstream sampling with two OPC's.

6.5.2 When two particle counters are used to acquire the upstream and downstream counts, they must be closely matched in flowrate and optical design.

6.6 Airflow Monitor. The volumetric airflow through the system shall be measured with a calibrated orifice plate, flow nozzle, or laminar flow element. The measurement device must have an accuracy of 5 percent or better.

*7.0 Reagents and Standards*

7.1 The liquid test aerosol is reagent grade, 98 percent pure, oleic acid (Table 319–2). The solid test aerosol is KCl aerosolized from a solution of KCl in water. In addition to the test aerosol, a calibration aerosol of monodisperse polystyrene latex (PSL) spheres is used to verify the calibration of the OPC.

TABLE 319–2—PROPERTIES OF THE TEST AND CALIBRATION AEROSOLS

| | Refractive index | Density, g/cm$^3$ | Shape |
|---|---|---|---|
| Oleic Acid (liquid-phase challenge aerosol). | 1.46 nonabsorbing | 0.89 | Spherical. |
| KCl (solid-phase challenge aerosol). | 1.49 | 1.98 | Cubic or agglomerated cubes. |
| PSL (calibration aerosol) | 1.59 nonabsorbing | 1.05 | Spherical. |

*8.0 Sample Collection, Preservation, and Storage*

8.1 In this test, all sampling occurs in real-time, thus no samples are collected that require preservation or storage during the test. The paint arrestors are shipped and stored to avoid structural damage or soiling. Each arrestor may be shipped in its original box from the manufacturer or similar cardboard box. Arrestors are stored at the test site in a location that keeps them clean and dry. Each arrestor is clearly labeled for tracking purposes.

*9.0 Quality Control*

9.1 Table 319–1 lists the QC control limits.

9.2 The standard deviation (σ) of the penetration (P) for a given test at each of the 15 OPC sizing channels is computed from the coefficient of variation (CV, the standard deviation divided by the mean) of the upstream and downstream measurements as:

$$\sigma_P = P\sqrt{\left(CV_{upstream}^2 + CV_{downstream}^2\right)} \qquad \text{(Eq. 319-1)}$$

For a properly operating system, the standard deviation of the penetration is <0.10 at particle diameters from 0.3 to 3 µm and less than 0.30 at diameters >3 µm.

9.3 Data Quality Objectives (DQO).

9.3.1 Fractional Penetration. From the triplicate tests of each paint arrestor model, the standard deviation for the penetration measurements at each particle size (i.e., for each sizing channel of the OPC) is computed as:

$$s = \left[\sum \left(P_i - \overline{P}\right)^2 / (n-1)\right]^{\frac{1}{2}} \qquad \text{(Eq. 319-2)}$$

where $P_i$ represents an individual penetration measurement, and P the average of the 3 (n = 3) individual measurements.

9.3.2 Bias of the fractional penetration values is determined from triplicate no-filter and HEPA filter tests. These tests determine the measurement bias at 100 percent penetration and 0 percent penetration, respectively.

9.3.3 PSL-Equivalent Light Scattering Diameter. The precision and bias of the OPC sizing determination are based on sampling a known diameter of PSL and noting whether the particle counts peak in the correct channel of the OPC. This is a pass/fail measurement with no calculations involved.

9.3.4 Airflow. The precision of the measurement must be within 5 percent of the set point.

*10.0 Calibration and Standardization*

10.1 Optical Particle Counter. The OPC must have an up-to-date factory calibration. Check the OPC zero at the beginning and end of each test by sampling HEPA-filtered air. Verify the sizing accuracy on a daily basis (for days when tests are performed) with 1-size PSL spheres.

10.2 Airflow Measurement. Airflow measurement devices must have an accuracy of 5 percent or better. Manometers used in conjunction with the orifice plate must be inspected prior to use for proper level, zero, and mechanical integrity. Tubing connections to the manometer must be free from kinks and have secure connections.

10.3 Pressure Drop. Measure pressure drop across the paint arrestor with an inclined manometer readable to within 0.01 in. $H_2O$. Prior to use, the level and zero of the manometer, and all tubing connections, must be inspected and adjusted as needed.

*11.0 Procedure*

11.1 Filtration Efficiency. For both the oleic acid and KCl challenges, this procedure is performed in triplicate using a new arrestor for each test.

11.1.1 General Information and Test Duct Preparation

11.1.1.1 Use the ''Test Run Sheet'' form (Figure 319–2) to record the test information.

RUN SHEET

*Part 1. General Information*

Date and Time: _____

Test Operator: _____

Test #: _____

Paint Arrestor:

Brand/Model _____

Arrestor Assigned ID # _____

Condition of arrestor (i.e., is there any damage? Must be new condition to proceed):

_____

Manometer zero and level confirmed?

_____

*Part 2. Clean Efficiency Test*

Date and Time: _____

Optical Particle Counter:

20 min. warm up _____

Zero count (<50 counts/min) _____

Daily PSL check _____

PSL Diam: _____ μm

File name for OPC data: _____

Test Conditions:

Air Flow: _____

Temp & RH: Temp _____ °F RH _____ %

Atm. Pressure: _____in. Hg

(From mercury barometer)

Aerosol Generator: (record all operating parameters)

_____

_____

_____

_____

Test Aerosol:

(Oleic acid or KCl) _____

Arrestor:

Pressure drop: at start _____ in. $H_2O$

at end _____ in. $H_2O$

Condition of arrestor at end of test (note any physical deterioration):

_____

_____

FIGURE 319–2. TEST RUN SHEET

Other report formats which contain the same information are acceptable.

11.1.1.2 Record the date, time, test operator, Test #, paint arrestor brand/model and its assigned ID number. For tests with no arrestor, record none.

11.1.1.3 Ensure that the arrestor is undamaged and is in ''new'' condition.

11.1.1.4 Mount the arrestor in the appropriate frame. Inspect for any airflow leak paths.

11.1.1.5 Install frame-mounted arrestor in the test duct. Examine the installed arrestor to verify that it is sealed in the duct. For tests with no arrestor, install the empty frame.

11.1.1.6 Visually confirm the manometer zero and level. Adjust as needed.

11.1.2 Clean Efficiency Test.

11.1.2.1 Record the date and time upon beginning this section.

11.1.2.2 Optical Particle Counter.

11.1.2.2.1 General: Operate the OPC per the manufacturer's instructions allowing a minimum of 20 minutes warm up before making any measurements.

11.1.2.2.2 Overload: The OPC will yield inaccurate data if the aerosol concentration it is attempting to measure exceeds its operating limit. To ensure reliable measurements, the maximum aerosol concentration will not exceed 10 percent of the manufacturer's claimed upper concentration limit corresponding to a 10 percent count error. If this value is exceeded, reduce the aerosol concentration until the acceptable conditions are met.

11.1.2.2.3 Zero Count: Connect a HEPA capsule to the inlet of the OPC and obtain printouts for three samples (each a minimum of 1-minute each). Record maximum cumulative zero count. If the count rate exceeds 50 counts per minute, the OPC requires servicing before continuing.

11.1.2.2.4 PSL Check of OPC Calibration: Confirm the calibration of the OPC by sampling a known size PSL aerosol. Aerosolize the PSL using an appropriate nebulizer. Record whether the peak count is observed in the proper channel. If the peak is not seen in the appropriate channel, have the OPC recalibrated.

11.1.2.3 Test Conditions:

11.1.2.3.1 Airflow: The test airflow corresponds to a nominal face velocity of 120 FPM through the arrestor. For arrestors having nominal 20 in. × 20 in. face dimensions, this measurement corresponds to an airflow of 333 cfm. For arrestors having nominal face dimensions of 24 in. × 24 in., this measurement corresponds to an airflow of 480 cfm.

11.1.2.3.2 Temperature and Relative Humidity: The temperature and relative humidity of the challenge air stream will be measured to within an accuracy of ±2 °F and ±10 percent RH. To protect the probe from fouling, it may be removed during periods of aerosol generation.

11.1.2.3.3 Barometric Pressure: Use a mercury barometer. Record the atmospheric pressure.

11.1.2.4 Upstream and Downstream Background Counts.

11.1.2.4.1 With the arrestor installed in the test duct and the airflow set at the proper value, turn on the data acquisition computer and bring up the data acquisition program.

11.1.2.4.2 Set the OPC settings for the appropriate test sample duration with output for both printer and computer data collection.

11.1.2.4.3 Obtain one set of upstream-downstream background measurements.

11.1.2.4.4 After obtaining the upstream-downstream measurements, stop data acquisition.

11.1.2.5 Efficiency Measurements:

11.1.2.5.1 Record the arrestor pressure drop.

11.1.2.5.2 Turn on the Aerosol Generator. Begin aerosol generation and record the operating parameters.

11.1.2.5.3 Monitor the particle counts. Allow a minimum of 5 minutes for the generator to stabilize.

11.1.2.5.4 Confirm that the total particle count does not exceed the predetermined upper limit. Adjust generator as needed.

11.1.2.5.5 Confirm that a minimum of 50 particle counts are measured in the upstream sample in each of the OPC channels per sample. (A minimum of 50 counts per channel per sample will yield the required minimum 500 counts per channel total for the 10 upstream samples as specified in Table 319–1.) Adjust generator or sample time as needed.

11.1.2.5.6 If you are unable to obtain a stable concentration within the concentration limit and with the 50 count minimum per channel, adjust the aerosol generator.

11.1.2.5.7 When the counts are stable, perform repeated upstream-downstream sampling until 10 upstream-downstream measurements are obtained.

11.1.2.5.8 After collection of the 10 upstream-downstream samples, stop data acquisition and allow 2 more minutes for final purging of generator.

11.1.2.5.9 Obtain one additional set of upstream-downstream background samples.

11.1.2.5.10 After obtaining the upstream-downstream background samples, stop data acquisition.

11.1.2.5.11 Record the arrestor pressure drop.

11.1.2.5.12 Turn off blower.

11.1.2.5.13 Remove the paint arrestor assembly from the test duct. Note any signs of physical deterioration.

11.1.2.5.14 Remove the arrestor from the frame and place the arrestor in an appropriate storage bag.

11.2 Control Test: 100 Percent Penetration Test. A 100 percent penetration test must be performed immediately before each individual paint arrestor test using the same challenge aerosol substance (i.e., oleic acid or KCl) as to be used in the arrestor test. These tests are performed with no arrestor installed in the test housing. This test is a relatively stringent test of the adequacy of the overall duct, sampling, measurement, and aerosol generation system. The test is performed as a normal penetration test except the paint arrestor is not used. A perfect system would yield a measured penetration of 1 at all particle sizes. Deviations from 1 can occur due to particle losses in the duct,

differences in the degree of aerosol uniformity (i.e., mixing) at the upstream and downstream probes, and differences in particle transport efficiency in the upstream and downstream sampling lines.

11.3 Control Test: 0 Percent Penetration. One 0 percent penetration test must be performed at least monthly during testing. The test is performed by using a HEPA filter rather than a paint arrestor. This test assesses the adequacy of the instrument response time and sample line lag.

*12.0 Data Analysis and Calculations*

12.1 Analysis. The analytical procedures for the fractional penetration and flow velocity measurements are described in Section 11. Note that the primary measurements, those of the upstream and downstream aerosol concentrations, are performed with the OPC which acquires the sample and analyzes it in real time. Because all the test data are collected in real time, there are no analytical procedures performed subsequent to the actual test, only data analysis.

12.2 Calculations.

12.2.1 Penetration.

*Nomenclature*

U = Upstream particle count
D = Downstream particle count
$U_b$ = Upstream background count
$D_b$ = Downstream background count
$P_{100}$ = 100 percent penetration value determined immediately prior to the arrestor test computed for each channel as:

$$P_{100} = \frac{\left(\overline{D} - \overline{D_b}\right)}{\left(\overline{U} - \overline{U_b}\right)}$$

P = Penetration of the arrestor corrected for $P_{100}$
ρ= sample standard deviation
CV = coefficient of variation = ρ/mean
E = Efficiency.

Overbar denotes arithmetic mean of quantity.

Analysis of each test involves the following quantities:

- $P_{100}$ value for each sizing channel from the 100 percent penetration control test,
- 2 upstream background values,
- 2 downstream background values,
- 10 upstream values with aerosol generator on, and
- 10 downstream values with aerosol generator on.

Using the values associated with each sizing channel, the penetration associated with each particle-sizing channel is calculated as:

$$P = \left\{\frac{\left(\overline{D} - \overline{D}_b\right)}{\left(\overline{U} - \overline{U}_b\right)}\right\} / P_{100} \qquad \text{(Eq. 319-3)}$$

$$E = 1 - P \qquad \text{(Eq. 319-4)}$$

Most often, the background levels are small compared to the values when the aerosol generator is on.

12.3 The relationship between the physical diameter ($D_{Physical}$) as measured by the OPC to the aerodynamic diameter ($D_{Aero}$) is given by:

$$D_{Aero} = D_{Physical}\sqrt{\frac{\rho_{Particle}}{\rho_o}\frac{CCF_{Physical}}{CCF_{Aero}}} \qquad \text{(Eq. 319-5)}$$

Where:

$p_O$ = unit density of 1 g/cm³.
$p_{Particle}$ = the density of the particle, 0.89 g/cm³ for oleic acid.
$CCF_{Physical}$ = the Cunningham Correction Factor at $D_{Physical}$.
$CCF_{Aero}$ = the Cunningham Correction Factor at $D^{Aero}$.

12.4 Presentation of Results. For a given arrestor, results will be presented for:

- Triplicate arrestor tests with the liquid-phase challenge aerosol,
- Triplicate arrestor tests with the solid-phase challenge aerosol,
- Triplicate 100 percent penetration tests with the liquid-phase challenge aerosol,
- Triplicate 100 percent penetration tests with the solid-phase challenge aerosol, and
- One 0 percent filter test (using either the liquid-phase or solid-phase aerosol and performed at least monthly).

12.4.1 Results for the paint arrestor test must be presented in both graphical and tabular form. The X-axis of the graph will be a logarithmic scale of aerodynamic diameter from 0.1 to 100 μm. The Y-axis will be efficiency (%) on a linear scale from 0 to 100. Plots for each individual run and a plot of the average of triplicate solid-phase and of the average triplicate liquid-phase tests must be prepared. All plots are to be based

on point-to-point plotting (i.e., no curve fitting is to be used). The data are to be plotted based on the geometric mean diameter of each of the OPC's sizing channels.

12.4.2 Tabulated data from each test must be provided. The data must include the upper and lower diameter bound and geometric mean diameter of each of the OPC sizing channels, the background particle counts for each channel for each sample, the upstream particle counts for each channel for each sample, the downstream particle counts for each channel for each sample, the 100 percent penetration values computed for each channel, and the 0 percent penetration values computed for each channel.

*13.0 Pollution Prevention*

13.1 The quantities of materials to be aerosolized should be prepared in accord with the amount needed for the current tests so as to prevent wasteful excess.

*14.0 Waste Management*

14.1 Paint arrestors may be returned to originator, if requested, or disposed of with regular laboratory waste.

*15.0 References*

1. Hanley, J.T., D.D. Smith and L. Cox. ''Fractional Penetration of Paint Overspray Arrestors, Draft Final Report,'' EPA Cooperative Agreement CR–817083–01–0, January 1994.

2. Hanley, J.T., D.D. Smith, and D.S. Ensor. ''Define a Fractional Efficiency Test Method that is Compatible with Particulate Removal Air Cleaners Used in General Ventilation,'' Final Report, 671–RP, American Society of Heating, Refrigerating, and Air-Conditioning Engineers, Inc., December 1993.

3. ''Project Work and Quality Assurance Plan: Fractional Penetration of Paint Overspray Arrestors, Category II,'' EPA Cooperative Agreement No. CR–817083, July 1994.

## TEST METHOD 320—MEASUREMENT OF VAPOR PHASE ORGANIC AND INORGANIC EMISSIONS BY EXTRACTIVE FOURIER TRANSFORM INFRARED (FTIR) SPECTROSCOPY

*1.0 Introduction*

Persons unfamiliar with basic elements of FTIR spectroscopy should not attempt to use this method. This method describes sampling and analytical procedures for extractive emission measurements using Fourier transform infrared (FTIR) spectroscopy. Detailed analytical procedures for interpreting infrared spectra are described in the ''Protocol for the Use of Extractive Fourier Transform Infrared (FTIR) Spectrometry in Analyses of Gaseous Emissions from Stationary Sources,'' hereafter referred to as the ''Protocol.'' Definitions not given in this method are given in appendix A of the Protocol. References to specific sections in the Protocol are made throughout this Method. For additional information refer to references 1 and 2, and other EPA reports, which describe the use of FTIR spectrometry in specific field measurement applications and validation tests. The sampling procedure described here is extractive. Flue gas is extracted through a heated gas transport and handling system. For some sources, sample conditioning systems may be applicable. Some examples are given in this method.

NOTE: Sample conditioning systems may be used providing the method validation requirements in Sections 9.2 and 13.0 of this method are met.

1.1 Scope and Applicability.

1.1.1 *Analytes.* Analytes include hazardous air pollutants (HAPs) for which EPA reference spectra have been developed. Other compounds can also be measured with this method if reference spectra are prepared according to section 4.6 of the protocol.

1.1.2 *Applicability.* This method applies to the analysis of vapor phase organic or inorganic compounds which absorb energy in the mid-infrared spectral region, about 400 to 4000 $cm^{-1}$ (25 to 2.5 μm). This method is used to determine compound-specific concentrations in a multi-component vapor phase sample, which is contained in a closed-path gas cell. Spectra of samples are collected using double beam infrared absorption spectroscopy. A computer program is used to analyze spectra and report compound concentrations.

1.2 *Method Range and Sensitivity.* Analytical range and sensitivity depend on the frequency-dependent analyte absorptivity, instrument configuration, data collection parameters, and gas stream composition. Instrument factors include: (a) spectral resolution, (b) interferometer signal averaging time, (c) detector sensitivity and response, and (d) absorption path length.

1.2.1 For any optical configuration the analytical range is between the absorbance values of about .01 (infrared transmittance relative to the background = 0.98) and 1.0 (T = 0.1). (For absorbance >1.0 the relation between absorbance and concentration may not be linear.)

1.2.2 The concentrations associated with this absorbance range depend primarily on the cell path length and the sample temperature. An analyte absorbance greater than 1.0, can be lowered by decreasing the optical path length. Analyte absorbance increases with a longer path length. Analyte detection also depends on the presence of other species exhibiting absorbance in the same analytical region. Additionally, the estimated lower absorbance (A) limit (A = 0.01) depends on the root mean square deviation (RMSD) noise in the analytical region.

1.2.3 The concentration range of this method is determined by the choice of optical configuration.

1.2.3.1 The absorbance for a given concentration can be decreased by decreasing the path length or by diluting the sample. There is no practical upper limit to the measurement range.

1.2.3.2 The analyte absorbance for a given concentration may be increased by increasing the cell path length or (to some extent) using a higher resolution. Both modifications also cause a corresponding increased absorbance for all compounds in the sample, and a decrease in the signal throughput. For this reason the practical lower detection range (quantitation limit) usually depends on sample characteristics such as moisture content of the gas, the presence of other interferants, and losses in the sampling system.

1.3 *Sensitivity*. The limit of sensitivity for an optical configuration and integration time is determined using appendix D of the Protocol: Minimum Analyte Uncertainty, (MAU). The MAU depends on the RMSD noise in an analytical region, and on the absorptivity of the analyte in the same region.

1.4 *Data Quality*. Data quality shall be determined by executing Protocol pre-test procedures in appendices B to H of the protocol and post-test procedures in appendices I and J of the protocol.

1.4.1 Measurement objectives shall be established by the choice of detection limit ($DL_i$) and analytical uncertainty ($AU_i$) for each analyte.

1.4.2 An instrumental configuration shall be selected. An estimate of gas composition shall be made based on previous test data, data from a similar source or information gathered in a pre-test site survey. Spectral interferants shall be identified using the selected $DL_i$ and $AU_i$ and band areas from reference spectra and interferant spectra. The baseline noise of the system shall be measured in each analytical region to determine the MAU of the instrument configuration for each analyte and interferant ($MIU_i$).

1.4.3 Data quality for the application shall be determined, in part, by measuring the RMS (root mean square) noise level in each analytical spectral region (appendix C of the Protocol). The RMS noise is defined as the RMSD of the absorbance values in an analytical region from the mean absorbance value in the region.

1.4.4 The MAU is the minimum analyte concentration for which the $AU_i$ can be maintained; if the measured analyte concentration is less than $MAU_i$ then data quality are unacceptable.

*2.0 Summary of Method*

2.1 *Principle*. References 4 through 7 provide background material on infrared spectroscopy and quantitative analysis. A summary is given in this section.

2.1.1 Infrared absorption spectroscopy is performed by directing an infrared beam through a sample to a detector. The frequency-dependent infrared absorbance of the sample is measured by comparing this detector signal (single beam spectrum) to a signal obtained without a sample in the beam path (background).

2.1.2 Most molecules absorb infrared radiation and the absorbance occurs in a characteristic and reproducible pattern. The infrared spectrum measures fundamental molecular properties and a compound can be identified from its infrared spectrum alone.

2.1.3 Within constraints, there is a linear relationship between infrared absorption and compound concentration. If this frequency dependent relationship (absorptivity) is known (measured), it can be used to determine compound concentration in a sample mixture.

2.1.4 Absorptivity is measured by preparing, in the laboratory, standard samples of compounds at known concentrations and measuring the FTIR ''reference spectra'' of these standard samples. These ''reference spectra'' are then used in sample analysis: (1) Compounds are detected by matching sample absorbance bands with bands in reference spectra, and (2) concentrations are measured by comparing sample band intensities with reference band intensities.

2.1.5 This method is self-validating provided that the results meet the performance requirement of the QA spike in sections 8.6.2 and 9.0 of this method, and results from a previous method validation study support the use of this method in the application.

2.2 *Sampling and Analysis*. In extractive sampling a probe assembly and pump are used to extract gas from the exhaust of the affected source and transport the sample to the FTIR gas cell. Typically, the sampling apparatus is similar to that used for single-component continuous emission monitor (CEM) measurements.

2.2.1 The digitized infrared spectrum of the sample in the FTIR gas cell is measured and stored on a computer. Absorbance band intensities in the spectrum are related to sample concentrations by what is commonly referred to as Beer's Law.

$$A_i = a_i b c_i \qquad (1)$$

Where:

$A_i$ = absorbance at a given frequency of the ith sample component.

$a_i$ = absorption coefficient (absorptivity) of the ith sample component.

b = path length of the cell.

$c_i$ = concentration of the ith sample component.

2.2.2 Analyte spiking is used for quality assurance (QA). In this procedure (section 8.6.2

of this method) an analyte is spiked into the gas stream at the back end of the sample probe. Analyte concentrations in the spiked samples are compared to analyte concentrations in unspiked samples. Since the concentration of the spike is known, this procedure can be used to determine if the sampling system is removing the spiked analyte(s) from the sample stream.

2.3 *Reference Spectra Availability*. Reference spectra of over 100 HAPs are available in the EPA FTIR spectral library on the EMTIC (Emission Measurement Technical Information Center) computer bulletin board service and at internet address *http://info.arnold.af.mil/epa/welcome.htm*. Reference spectra for HAPs, or other analytes, may also be prepared according to section 4.6 of the Protocol.

2.4 *Operator Requirements*. The FTIR analyst shall be trained in setting up the instrumentation, verifying the instrument is functioning properly, and performing routine maintenance. The analyst must evaluate the initial sample spectra to determine if the sample matrix is consistent with pre-test assumptions and if the instrument configuration is suitable. The analyst must be able to modify the instrument configuration, if necessary.

2.4.1 The spectral analysis shall be supervised by someone familiar with EPA FTIR Protocol procedures.

2.4.2 A technician trained in instrumental test methods is qualified to install and operate the sampling system. This includes installing the probe and heated line assembly, operating the analyte spike system, and performing moisture and flow measurements.

*3.0 Definitions*

See appendix A of the Protocol for definitions relating to infrared spectroscopy. Additional definitions are given in sections 3.1 through 3.29.

3.1 *Analyte*. A compound that this method is used to measure. The term ''target analyte'' is also used. This method is multicomponent and a number of analytes can be targeted for a test.

3.2 *Reference Spectrum*. Infrared spectrum of an analyte prepared under controlled, documented, and reproducible laboratory conditions according to procedures in section 4.6 of the Protocol. A library of reference spectra is used to measure analytes in gas samples.

3.3 *Standard Spectrum*. A spectrum that has been prepared from a reference spectrum through a (documented) mathematical operation. A common example is de-resolving of reference spectra to lower-resolution standard spectra (Protocol, appendix K to the addendum of this method). Standard spectra, prepared by approved, and documented, procedures can be used as reference spectra for analysis.

3.4 *Concentration*. In this method concentration is expressed as a molar concentration, in ppm-meters, or in (ppm-meters)/K, where K is the absolute temperature (Kelvin). The latter units allow the direct comparison of concentrations from systems using different optical configurations or sampling temperatures.

3.5 *Interferant*. A compound in the sample matrix whose infrared spectrum overlaps with part of an analyte spectrum. The most accurate analyte measurements are achieved when reference spectra of interferants are used in the quantitative analysis with the analyte reference spectra. The presence of an interferant can increase the analytical uncertainty in the measured analyte concentration.

3.6 *Gas Cell*. A gas containment cell that can be evacuated. It is equipped with the optical components to pass the infrared beam through the sample to the detector. Important cell features include: path length (or range if variable), temperature range, materials of construction, and total gas volume.

3.7 *Sampling System*. Equipment used to extract the sample from the test location and transport the sample gas to the FTIR analyzer. This includes sample conditioning systems.

3.8 *Sample Analysis*. The process of interpreting the infrared spectra to obtain sample analyte concentrations. This process is usually automated using a software routine employing a classical least squares (cls), partial least squares (pls), or K- or P-matrix method.

3.9 *One hundred percent line*. A double beam transmittance spectrum obtained by combining two background single beam spectra. Ideally, this line is equal to 100 percent transmittance (or zero absorbance) at every frequency in the spectrum. Practically, a zero absorbance line is used to measure the baseline noise in the spectrum.

3.10 *Background Deviation*. A deviation from 100 percent transmittance in any region of the 100 percent line. Deviations greater than ±5 percent in an analytical region are unacceptable (absorbance of 0.021 to −0.022). Such deviations indicate a change in the instrument throughput relative to the background single beam.

3.11 *Batch Sampling*. A procedure where spectra of discreet, static samples are collected. The gas cell is filled with sample and the cell is isolated. The spectrum is collected. Finally, the cell is evacuated to prepare for the next sample.

3.12 *Continuous Sampling*. A procedure where spectra are collected while sample gas is flowing through the cell at a measured rate.

3.13 *Sampling resolution*. The spectral resolution used to collect sample spectra.

3.14 *Truncation*. Limiting the number of interferogram data points by deleting points

farthest from the center burst (zero path difference, ZPD).

3.15 *Zero filling*. The addition of points to the interferogram. The position of each added point is interpolated from neighboring real data points. Zero filling adds no information to the interferogram, but affects line shapes in the absorbance spectrum (and possibly analytical results).

3.16 *Reference CTS*. Calibration Transfer Standard spectra that were collected with reference spectra.

3.17 *CTS Standard*. CTS spectrum produced by applying a de-resolution procedure to a reference CTS.

3.18 *Test CTS*. CTS spectra collected at the sampling resolution using the same optical configuration as for sample spectra. Test spectra help verify the resolution, temperature and path length of the FTIR system.

3.19 *RMSD*. Root Mean Square Difference, defined in EPA FTIR Protocol, appendix A.

3.20 *Sensitivity*. The noise-limited compound-dependent detection limit for the FTIR system configuration. This is estimated by the MAU. It depends on the RMSD in an analytical region of a zero absorbance line.

3.21 *Quantitation Limit*. The lower limit of detection for the FTIR system configuration in the sample spectra. This is estimated by mathematically subtracting scaled reference spectra of analytes and interferences from sample spectra, then measuring the RMSD in an analytical region of the subtracted spectrum. Since the noise in subtracted sample spectra may be much greater than in a zero absorbance spectrum, the quantitation limit is generally much higher than the sensitivity. Removing spectral interferences from the sample or improving the spectral subtraction can lower the quantitation limit toward (but not below) the sensitivity.

3.22 *Independent Sample*. A unique volume of sample gas; there is no mixing of gas between two consecutive independent samples. In continuous sampling two independent samples are separated by at least 5 cell volumes. The interval between independent measurements depends on the cell volume and the sample flow rate (through the cell).

3.23 *Measurement*. A single spectrum of flue gas contained in the FTIR cell.

3.24 *Run*. A run consists of a series of measurements. At a minimum a run includes 8 independent measurements spaced over 1 hour.

3.25 *Validation*. Validation of FTIR measurements is described in sections 13.0 through 13.4 of this method. Validation is used to verify the test procedures for measuring specific analytes at a source. Validation provides proof that the method works under certain test conditions.

3.26 *Validation Run*. A validation run consists of at least 24 measurements of independent samples. Half of the samples are spiked and half are not spiked. The length of the run is determined by the interval between independent samples.

3.27 *Screening*. Screening is used when there is little or no available information about a source. The purpose of screening is to determine what analytes are emitted and to obtain information about important sample characteristics such as moisture, temperature, and interferences. Screening results are semi-quantitative (estimated concentrations) or qualitative (identification only). Various optical and sampling configurations may be used. Sample conditioning systems may be evaluated for their effectiveness in removing interferences. It is unnecessary to perform a complete run under any set of sampling conditions. Spiking is not necessary, but spiking can be a useful screening tool for evaluating the sampling system, especially if a reactive or soluble analyte is used for the spike.

3.28 *Emissions Test*. An FTIR emissions test is performed according specific sampling and analytical procedures. These procedures, for the target analytes and the source, are based on previous screening and validation results. Emission results are quantitative. A QA spike (sections 8.6.2 and 9.2 of this method) is performed under each set of sampling conditions using a representative analyte. Flow, gas temperature and diluent data are recorded concurrently with the FTIR measurements to provide mass emission rates for detected compounds.

3.29 *Surrogate*. A surrogate is a compound that is used in a QA spike procedure (section 8.6.2 of this method) to represent other compounds. The chemical and physical properties of a surrogate shall be similar to the compounds it is chosen to represent. Under given sampling conditions, usually a single sampling factor is of primary concern for measuring the target analytes: for example, the surrogate spike results can be representative for analytes that are more reactive, more soluble, have a lower absorptivity, or have a lower vapor pressure than the surrogate itself.

### *4.0 Interferences*

Interferences are divided into two classifications: analytical and sampling.

4.1 *Analytical Interferences*. An analytical interference is a spectral feature that complicates (in extreme cases may prevent) the analysis of an analyte. Analytical interferences are classified as background or spectral interference.

4.1.1 *Background Interference*. This results from a change in throughput relative to the single beam background. It is corrected by collecting a new background and proceeding with the test. In severe instances the cause must be identified and corrected. Potential causes include: (1) Deposits on reflective surfaces or transmitting windows, (2) changes in

detector sensitivity, (3) a change in the infrared source output, or (4) failure in the instrument electronics. In routine sampling throughput may degrade over several hours. Periodically a new background must be collected, but no other corrective action will be required.

4.1.2 *Spectral Interference*. This results from the presence of interfering compound(s) (interferant) in the sample. Interferant spectral features overlap analyte spectral features. Any compound with an infrared spectrum, including analytes, can potentially be an interferant. The Protocol measures absorbance band overlap in each analytical region to determine if potential interferants shall be classified as known interferants (FTIR Protocol, section 4.9 and appendix B). Water vapor and $CO_2$ are common spectral interferants. Both of these compounds have strong infrared spectra and are present in many sample matrices at high concentrations relative to analytes. The extent of interference depends on the (1) interferant concentration, (2) analyte concentration, and (3) the degree of band overlap. Choosing an alternate analytical region can minimize or avoid the spectral interference. For example, $CO_2$ interferes with the analysis of the 670 $cm_{-1}$ benzene band. However, benzene can also be measured near 3000 $cm^{-1}$ (with less sensitivity).

4.2 *Sampling System Interferences*. These prevent analytes from reaching the instrument. The analyte spike procedure is designed to measure sampling system interference, if any.

4.2.1 *Temperature*. A temperature that is too low causes condensation of analytes or water vapor. The materials of the sampling system and the FTIR gas cell usually set the upper limit of temperature.

4.2.2 *Reactive Species*. Anything that reacts with analytes. Some analytes, like formaldehyde, polymerize at lower temperatures.

4.2.3 *Materials*. Poor choice of material for probe, or sampling line may remove some analytes. For example, HF reacts with glass components.

4.2.4 *Moisture*. In addition to being a spectral interferant, condensed moisture removes soluble compounds.

*5.0 Safety*

The hazards of performing this method are those associated with any stack sampling method and the same precautions shall be followed. Many HAPs are suspected carcinogens or present other serious health risks. Exposure to these compounds should be avoided in all circumstances. For instructions on the safe handling of any particular compound, refer to its material safety data sheet. When using analyte standards, always ensure that gases are properly vented and that the gas handling system is leak free. (Always perform a leak check with the system under maximum vacuum and, again, with the system at greater than ambient pressure.) Refer to section 8.2 of this method for leak check procedures. This method does not address all of the potential safety risks associated with its use. Anyone performing this method must follow safety and health practices consistent with applicable legal requirements and with prudent practice for each application.

*6.0 Equipment and Supplies*

NOTE: Mention of trade names or specific products does not constitute endorsement by the Environmental Protection Agency.

The equipment and supplies are based on the schematic of a sampling system shown in Figure 1. Either the batch or continuous sampling procedures may be used with this sampling system. Alternative sampling configurations may also be used, provided that the data quality objectives are met as determined in the post-analysis evaluation. Other equipment or supplies may be necessary, depending on the design of the sampling system or the specific target analytes.

6.1 *Sampling Probe*. Glass, stainless steel, or other appropriate material of sufficient length and physical integrity to sustain heating, prevent adsorption of analytes, and to transport analytes to the infrared gas cell. Special materials or configurations may be required in some applications. For instance, high stack sample temperatures may require special steel or cooling the probe. For very high moisture sources it may be desirable to use a dilution probe.

6.2 *Particulate Filters*. A glass wool plug (optional) inserted at the probe tip (for large particulate removal) and a filter (required) rated for 99 percent removal efficiency at 1-micron (e.g., Balston'') connected at the outlet of the heated probe.

6.3 *Sampling Line/Heating System*. Heated (sufficient to prevent condensation) stainless steel, polytetrafluoroethane, or other material inert to the analytes.

6.4 *Gas Distribution Manifold*. A heated manifold allowing the operator to control flows of gas standards and samples directly to the FTIR system or through sample conditioning systems. Usually includes heated flow meter, heated valve for selecting and sending sample to the analyzer, and a bypass vent. This is typically constructed of stainless steel tubing and fittings, and high-temperature valves.

6.5 *Stainless Steel Tubing*. Type 316, appropriate diameter (e.g., ⅜ in.) and length for heated connections. Higher grade stainless may be desirable in some applications.

*6.6 Calibration/Analyte Spike Assembly*. A three way valve assembly (or equivalent) to introduce analyte or surrogate spikes into the sampling system at the outlet of the

probe upstream of the out-of-stack particulate filter and the FTIR analytical system.

6.7 *Mass Flow Meter (MFM).* These are used for measuring analyte spike flow. The MFM shall be calibrated in the range of 0 to 5 L/min and be accurate to ±2 percent (or better) of the flow meter span.

6.8 *Gas Regulators.* Appropriate for individual gas standards.

6.9 *Polytetrafluoroethane Tubing.* Diameter (e.g., ⅜ in.) and length suitable to connect cylinder regulators to gas standard manifold.

6.10 *Sample Pump.* A leak-free pump (e.g., KNF™), with by-pass valve, capable of producing a sample flow rate of at least 10 L/min through 100 ft of sample line. If the pump is positioned upstream of the distribution manifold and FTIR system, use a heated pump that is constructed from materials non-reactive to the analytes. If the pump is located downstream of the FTIR system, the gas cell sample pressure will be lower than ambient pressure and it must be recorded at regular intervals.

6.11 *Gas Sample Manifold.* Secondary manifold to control sample flow at the inlet to the FTIR manifold. This is optional, but includes a by-pass vent and heated rotameter.

6.12 *Rotameter.* A 0 to 20 L/min rotameter. This meter need not be calibrated.

6.13 *FTIR Analytical System.* Spectrometer and detector, capable of measuring the analytes to the chosen detection limit. The system shall include a personal computer with compatible software allowing automated collection of spectra.

6.14 *FTIR Cell Pump.* Required for the batch sampling technique, capable of evacuating the FTIR cell volume within 2 minutes. The pumping speed shall allow the operator to obtain 8 sample spectra in 1 hour.

6.15 *Absolute Pressure Gauge.* Capable of measuring pressure from 0 to 1000 mmHg to within ±2.5 mmHg (e.g., Baratron™).

6.16 *Temperature Gauge.* Capable of measuring the cell temperature to within ±2 °C.

6.17 *Sample Conditioning.* One option is a condenser system, which is used for moisture removal. This can be helpful in the measurement of some analytes. Other sample conditioning procedures may be devised for the removal of moisture or other interfering species.

6.17.1 The analyte spike procedure of section 9.2 of this method, the QA spike procedure of section 8.6.2 of this method, and the validation procedure of section 13 of this method demonstrate whether the sample conditioning affects analyte concentrations. Alternatively, measurements can be made with two parallel FTIR systems; one measuring conditioned sample, the other measuring unconditioned sample.

6.17.2 Another option is sample dilution. The dilution factor measurement must be documented and accounted for in the reported concentrations. An alternative to dilution is to lower the sensitivity of the FTIR system by decreasing the cell path length, or to use a short-path cell in conjunction with a long path cell to measure more than one concentration range.

*7.0 Reagents and Standards*

7.1 *Analyte(s) and Tracer Gas.* Obtain a certified gas cylinder mixture containing all of the analyte(s) at concentrations within ±2 percent of the emission source levels (expressed in ppm-meter/K). If practical, the analyte standard cylinder shall also contain the tracer gas at a concentration which gives a measurable absorbance at a dilution factor of at least 10:1. Two ppm $SF_6$ is sufficient for a path length of 22 meters at 250 °F.

7.2 *Calibration Transfer Standard(s).* Select the calibration transfer standards (CTS) according to section 4.5 of the FTIR Protocol. Obtain a National Institute of Standards and Technology (NIST) traceable gravimetric standard of the CTS (±2 percent).

7.3 *Reference Spectra.* Obtain reference spectra for each analyte, interferant, surrogate, CTS, and tracer. If EPA reference spectra are not available, use reference spectra prepared according to procedures in section 4.6 of the EPA FTIR Protocol.

*8.0 Sampling and Analysis Procedure*

Three types of testing can be performed: (1) Screening, (2) emissions test, and (3) validation. Each is defined in section 3 of this method. Determine the purpose(s) of the FTIR test. Test requirements include: (a) $AU_i$, $DL_i$, overall fractional uncertainty, $OFU_i$, maximum expected concentration ($CMAX_i$), and $t_{AN}$ for each, (b) potential interferants, (c) sampling system factors, e.g., minimum absolute cell pressure, ($P_{min}$), FTIR cell volume ($V_{SS}$), estimated sample absorption pathlength, $L_S'$, estimated sample pressure, $P_S'$, $T_S'$, signal integration time ($t_{SS}$), minimum instrumental linewidth, MIL, fractional error, and (d) analytical regions, e.g., m = 1 to M, lower wavenumber position, FLm, center wavenumber position, $FC_m$, and upper wavenumber position, $FU_m$, plus interferants, upper wavenumber position of the CTS absorption band, $FFU_m$, lower wavenumber position of the CTS absorption band, $FFL_m$, wavenumber range FNU to FNL. If necessary, sample and acquire an initial spectrum. From analysis of this preliminary spectrum determine a suitable operational path length. Set up the sampling train as shown in Figure 1 or use an appropriate alternative configuration. Sections 8.1 through 8.11 of this method provide guidance on pretest calculations in the EPA protocol, sampling and analytical procedures, and posttest protocol calculations.

8.1 *Pretest Preparations and Evaluations.* Using the procedure in section 4.0 of the

FTIR Protocol, determine the optimum sampling system configuration for measuring the target analytes. Use available information to make reasonable assumptions about moisture content and other interferences.

8.1.1 *Analytes*. Select the required detection limit ($DL_i$) and the maximum permissible analytical uncertainty ($AU_i$) for each analyte (labeled from 1 to i). Estimate, if possible, the maximum expected concentration for each analyte, $CMAX_i$. The expected measurement range is fixed by $DL_i$ and $CMAX_i$ for each analyte (i).

8.1.2 *Potential Interferants*. List the potential interferants. This usually includes water vapor and $CO_2$, but may also include some analytes and other compounds.

8.1.3. *Optical Configuration*. Choose an optical configuration that can measure all of the analytes within the absorbance range of .01 to 1.0 (this may require more than one path length). Use Protocol sections 4.3 to 4.8 for guidance in choosing a configuration and measuring CTS.

8.1.4 *Fractional Reproducibility Uncertainty ($FRU_i$)*. The FRU is determined for each analyte by comparing CTS spectra taken before and after the reference spectra were measured. The EPA para-xylene reference spectra were collected on 10/31/91 and 11/01/91 with corresponding CTS spectra ''cts1031a,'' and ''cts1101b.'' The CTS spectra are used to estimate the reproducibility (FRU) in the system that was used to collect the references. The FRU must be <AU. Appendix E of the protocol is used to calculate the FRU from CTS spectra. Figure 2 plots results for 0.25 $cm^{-1}$ CTS spectra in EPA reference library: $S_3$ (cts1101b − cts1031a), and $S_4$ [(cts1101b + cts1031a)/2]. The RMSD (SRMS) is calculated in the subtracted baseline, $S_3$, in the corresponding CTS region from 850 to 1065 $cm^{-1}$. The area (BAV) is calculated in the same region of the averaged CTS spectrum, $S_4$.

8.1.5 *Known Interferants*. Use appendix B of the EPA FTIR Protocol.

8.1.6 Calculate the Minimum Analyte Uncertainty, MAU (section 1.3 of this method discusses MAU and protocol appendix D gives the MAU procedure). The MAU for each analyte, i, and each analytical region, m, depends on the RMS noise.

8.1.7 *Analytical Program*. See FTIR Protocol, section 4.10. Prepare computer program based on the chosen analytical technique. Use as input reference spectra of all target analytes and expected interferants. Reference spectra of additional compounds shall also be included in the program if their presence (even if transient) in the samples is considered possible. The program output shall be in ppm (or ppb) and shall be corrected for differences between the reference path length, $L_R$, temperature, $T_R$, and pressure, $P_R$, and the conditions used for collecting the sample spectra. If sampling is performed at ambient pressure, then any pressure correction is usually small relative to corrections for path length and temperature, and may be neglected.

8.2 Leak-Check

8.2.1 *Sampling System*. A typical FTIR extractive sampling train is shown in Figure 1. Leak check from the probe tip to pump outlet as follows: Connect a 0-to 250-mL/min rate meter (rotameter or bubble meter) to the outlet of the pump. Close off the inlet to the probe, and record the leak rate. The leak rate shall be ≤200 mL/min.

8.2.2 *Analytical System Leak check*. Leak check the FTIR cell under vacuum and under pressure (greater than ambient). Leak check connecting tubing and inlet manifold under pressure.

8.2.2.1 For the evacuated sample technique, close the valve to the FTIR cell, and evacuate the absorption cell to the minimum absolute pressure $P_{min}$. Close the valve to the pump, and determine the change in pressure $\Delta P_v$ after 2 minutes.

8.2.2.2 For both the evacuated sample and purging techniques, pressurize the system to about 100 mmHg above atmospheric pressure. Isolate the pump and determine the change in pressure $\Delta P_p$ after 2 minutes.

8.2.2.3 Measure the barometric pressure, $P_b$ in mmHg.

8.2.2.4 Determine the percent leak volume $\%V_L$ for the signal integration time $t_{SS}$ and for $\Delta P_{max}$, *i.e.*, the larger of $\Delta P_v$ or $\Delta P_p$, as follows:

$$\%V_L = 50 t_{ss} \frac{\Delta P_{max}}{P_s} \qquad (2)$$

Where:

50 = 100% divided by the leak-check time of 2 minutes.

8.2.2.5 Leak volumes in excess of 4 percent of the FTIR system volume $V_{SS}$ are unacceptable.

8.3 *Detector Linearity*. Once an optical configuration is chosen, use one of the procedures of sections 8.3.1 through 8.3.3 to verify that the detector response is linear. If the detector response is not linear, decrease the aperture, or attenuate the infrared beam.

After a change in the instrument configuration perform a linearity check until it is demonstrated that the detector response is linear.

8.3.1 Vary the power incident on the detector by modifying the aperture setting. Measure the background and CTS at three instrument aperture settings: (1) at the aperture setting to be used in the testing, (2) at one half this aperture and (3) at twice the proposed testing aperture. Compare the three CTS spectra. CTS band areas shall agree to within the uncertainty of the cylinder standard and the RMSD noise in the system. If test aperture is the maximum aperture, collect CTS spectrum at maximum aperture, then close the aperture to reduce the IR throughput by half. Collect a second background and CTS at the smaller aperture setting and compare the spectra again.

8.3.2 Use neutral density filters to attenuate the infrared beam. Set up the FTIR system as it will be used in the test measurements. Collect a CTS spectrum. Use a neutral density filter to attenuate the infrared beam (either immediately after the source or the interferometer) to approximately ½ its original intensity. Collect a second CTS spectrum. Use another filter to attenuate the infrared beam to approximately ¼ its original intensity. Collect a third background and CTS spectrum. Compare the CTS spectra. CTS band areas shall agree to within the uncertainty of the cylinder standard and the RMSD noise in the system.

8.3.3 Observe the single beam instrument response in a frequency region where the detector response is known to be zero. Verify that the detector response is ''flat'' and equal to zero in these regions.

8.4 *Data Storage Requirements.* All field test spectra shall be stored on a computer disk and a second backup copy must stored on a separate disk. The stored information includes sample interferograms, processed absorbance spectra, background interferograms, CTS sample interferograms and CTS absorbance spectra. Additionally, documentation of all sample conditions, instrument settings, and test records must be recorded on hard copy or on computer medium. Table 1 gives a sample presentation of documentation.

8.5 *Background Spectrum.* Evacuate the gas cell to ≤5 mmHg, and fill with dry nitrogen gas to ambient pressure (or purge the cell with 10 volumes of dry nitrogen). Verify that no significant amounts of absorbing species (for example water vapor and $CO_2$) are present. Collect a background spectrum, using a signal averaging period equal to or greater than the averaging period for the sample spectra. Assign a unique file name to the background spectrum. Store two copies of the background interferogram and processed single-beam spectrum on separate computer disks (one copy is the back-up).

8.5.1 *Interference Spectra.* If possible, collect spectra of known and suspected major interferences using the same optical system that will be used in the field measurements. This can be done on-site or earlier. A number of gases, e.g. $CO_2$, $SO_2$, CO, $NH_3$, are readily available from cylinder gas suppliers.

8.5.2 Water vapor spectra can be prepared by the following procedure. Fill a sample tube with distilled water. Evacuate above the sample and remove dissolved gasses by alternately freezing and thawing the water while evacuating. Allow water vapor into the FTIR cell, then dilute to atmospheric pressure with nitrogen or dry air. If quantitative water spectra are required, follow the reference spectrum procedure for neat samples (protocol, section 4.6). Often, interference spectra need not be quantitative, but for best results the absorbance must be comparable to the interference absorbance in the sample spectra.

8.6 Pre-Test Calibrations

8.6.1 *Calibration Transfer Standard.* Evacuate the gas cell to ≤5 mmHg absolute pressure, and fill the FTIR cell to atmospheric pressure with the CTS gas. Alternatively, purge the cell with 10 cell volumes of CTS gas. (If purge is used, verify that the CTS concentration in the cell is stable by collecting two spectra 2 minutes apart as the CTS gas continues to flow. If the absorbance in the second spectrum is no greater than in the first, within the uncertainty of the gas standard, then this can be used as the CTS spectrum.) Record the spectrum.

8.6.2 *QA Spike.* This procedure assumes that the method has been validated for at least some of the target analytes at the source. For emissions testing perform a QA spike. Use a certified standard, if possible, of an analyte, which has been validated at the source. One analyte standard can serve as a QA surrogate for other analytes which are less reactive or less soluble than the standard. Perform the spike procedure of section 9.2 of this method. Record spectra of at least three independent (section 3.22 of this method) spiked samples. Calculate the spiked component of the analyte concentration. If the average spiked concentration is within 0.7 to 1.3 times the expected concentration, then proceed with the testing. If applicable, apply the correction factor from the Method 301 of this appendix validation test (not the result from the QA spike).

8.7 *Sampling.* If analyte concentrations vary rapidly with time, continuous sampling is preferable using the smallest cell volume, fastest sampling rate and fastest spectra collection rate possible. Continuous sampling requires the least operator intervention even without an automated sampling system. For continuous monitoring at one location over long periods, Continuous sampling is preferred. Batch sampling and continuous static

sampling are used for screening and performing test runs of finite duration. Either technique is preferred for sampling several locations in a matter of days. Batch sampling gives reasonably good time resolution and ensures that each spectrum measures a discreet (and unique) sample volume. Continuous static (and continuous) sampling provide a very stable background over long periods. Like batch sampling, continuous static sampling also ensures that each spectrum measures a unique sample volume. It is essential that the leak check procedure under vacuum (section 8.2 of this method) is passed if the batch sampling procedure is used. It is essential that the leak check procedure under positive pressure is passed if the continuous static or continuous sampling procedures are used. The sampling techniques are described in sections 8.7.1 through 8.7.2 of this method.

8.7.1 *Batch Sampling*. Evacuate the absorbance cell to ≤5 mmHg absolute pressure. Fill the cell with exhaust gas to ambient pressure, isolate the cell, and record the spectrum. Before taking the next sample, evacuate the cell until no spectral evidence of sample absorption remains. Repeat this procedure to collect eight spectra of separate samples in 1 hour.

8.7.2 *Continuous Static Sampling*. Purge the FTIR cell with 10 cell volumes of sample gas. Isolate the cell, collect the spectrum of the static sample and record the pressure. Before measuring the next sample, purge the cell with 10 more cell volumes of sample gas.

8.8 Sampling QA and Reporting

8.8.1 Sample integration times shall be sufficient to achieve the required signal-to-noise ratio. Obtain an absorbance spectrum by filling the cell with N2. Measure the RMSD in each analytical region in this absorbance spectrum. Verify that the number of scans used is sufficient to achieve the target MAU.

8.8.2 Assign a unique file name to each spectrum.

8.8.3 Store two copies of sample interferograms and processed spectra on separate computer disks.

8.8.4 For each sample spectrum, document the sampling conditions, the sampling time (while the cell was being filled), the time the spectrum was recorded, the instrumental conditions (path length, temperature, pressure, resolution, signal integration time), and the spectral file name. Keep a hard copy of these data sheets.

8.9 *Signal Transmittance*. While sampling, monitor the signal transmittance. If signal transmittance (relative to the background) changes by 5 percent or more (absorbance = -.02 to .02) in any analytical spectral region, obtain a new background spectrum.

8.10 *Post-test CTS*. After the sampling run, record another CTS spectrum.

8.11 *Post-test QA*

8.11.1 Inspect the sample spectra immediately after the run to verify that the gas matrix composition was close to the expected (assumed) gas matrix.

8.11.2 Verify that the sampling and instrumental parameters were appropriate for the conditions encountered. For example, if the moisture is much greater than anticipated, it may be necessary to use a shorter path length or dilute the sample.

8.11.3 Compare the pre- and post-test CTS spectra. The peak absorbance in pre- and post-test CTS must be ±5 percent of the mean value. See appendix E of the FTIR Protocol.

### *9.0 Quality Control*

Use analyte spiking (sections 8.6.2, 9.2 and 13.0 of this method) to verify that the sampling system can transport the analytes from the probe to the FTIR system.

9.1 *Spike Materials*. Use a certified standard (accurate to ±2 percent) of the target analyte, if one can be obtained. If a certified standard cannot be obtained, follow the procedures in section 4.6.2.2 of the FTIR Protocol.

9.2 *Spiking Procedure*. QA spiking (section 8.6.2 of this method) is a calibration procedure used before testing. QA spiking involves following the spike procedure of sections 9.2.1 through 9.2.3 of this method to obtain at least three spiked samples. The analyte concentrations in the spiked samples shall be compared to the expected spike concentration to verify that the sampling/analytical system is working properly. Usually, when QA spiking is used, the method has already been validated at a similar source for the analyte in question. The QA spike demonstrates that the validated sampling/analytical conditions are being duplicated. If the QA spike fails then the sampling/analytical system shall be repaired before testing proceeds. The method validation procedure (section 13.0 of this method) involves a more extensive use of the analyte spike procedure of sections 9.2.1 through 9.2.3 of this method. Spectra of at least 12 independent spiked and 12 independent unspiked samples are recorded. The concentration results are analyzed statistically to determine if there is a systematic bias in the method for measuring a particular analyte. If there is a systematic bias, within the limits allowed by Method 301 of this appendix, then a correction factor shall be applied to the analytical results. If the systematic bias is greater than the allowed limits, this method is not valid and cannot be used.

9.2.1 Introduce the spike/tracer gas at a constant flow rate of ≤10 percent of the total sample flow, when possible.

NOTE: Use the rotameter at the end of the sampling train to estimate the required spike/tracer gas flow rate.

Use a flow device, e.g., mass flow meter (# 2 percent), to monitor the spike flow rate. Record the spike flow rate every 10 minutes.

9.2.2 Determine the response time (RT) of the system by continuously collecting spectra of the spiked effluent until the spectrum of the spiked component is constant for 5 minutes. The RT is the interval from the first measurement until the spike becomes constant. Wait for twice the duration of the RT, then collect spectra of two independent spiked gas samples. Duplicate analyses of the spiked concentration shall be within 5 percent of the mean of the two measurements.

9.2.3 Calculate the dilution ratio using the tracer gas as follows:

$$DF = \frac{SF_{6(spk)}}{SF_{6(dir)}} \quad (3)$$

Where:

$$CS = DF * Spike_{dir} + Unspike\ (1 - DF) \quad (4)$$

DF = Dilution factor of the spike gas; this value shall be ≥10.

$SF_{6(dir)}$ = $SF_6$ (or tracer gas) concentration measured directly in undiluted spike gas.

$SF_{6(spk)}$ = Diluted $SF_6$ (or tracer gas) concentration measured in a spiked sample.

$Spike_{dir}$ = Concentration of the analyte in the spike standard measured by filling the FTIR cell directly.

CS = Expected concentration of the spiked samples.

Unspike = Native concentration of analytes in unspiked samples.

*10.0 Calibration and Standardization*

10.1 *Signal-to-Noise Ratio (S/N).* The RMSD in the noise must be less than one tenth of the minimum analyte peak absorbance in each analytical region. For example if the minimum peak absorbance is 0.01 at the required DL, then RMSD measured over the entire analytical region must be ≤0.001.

10.2 *Absorbance Path length.* Verify the absorbance path length by comparing reference CTS spectra to test CTS spectra. See appendix E of the FTIR Protocol.

10.3 *Instrument Resolution.* Measure the line width of appropriate test CTS band(s) to verify instrument resolution. Alternatively, compare CTS spectra to a reference CTS spectrum, if available, measured at the nominal resolution.

10.4 *Apodization Function.*In transforming the sample interferograms to absorbance spectra use the same apodization function that was used in transforming the reference spectra.

10.5 *FTIR Cell Volume.* Evacuate the cell to ≤5 mmHg. Measure the initial absolute temperature ($T_i$) and absolute pressure ($P_i$). Connect a wet test meter (or a calibrated dry gas meter), and slowly draw room air into the cell. Measure the meter volume ($V_m$), meter absolute temperature ($T_m$), and meter absolute pressure ($P_m$); and the cell final absolute temperature ($T_f$) and absolute pressure ($P_f$). Calculate the FTIR cell volume VSS, including that of the connecting tubing, as follows:

$$V_{SS} = \frac{V_m \frac{P_m}{T_m}}{\left[\frac{P_f}{T_f} - \frac{P_i}{T_i}\right]} \quad (5)$$

*11.0 Data Analysis and Calculations*

Analyte concentrations shall be measured using reference spectra from the EPA FTIR spectral library. When EPA library spectra are not available, the procedures in section 4.6 of the Protocol shall be followed to prepare reference spectra of all the target analytes.

11.1 *Spectral De-resolution.* Reference spectra can be converted to lower resolution standard spectra (section 3.3 of this method) by truncating the original reference sample and background interferograms. Appendix K of the FTIR Protocol gives specific deresolution procedures. Deresolved spectra shall be transformed using the same apodization function and level of zero filling as the sample spectra. Additionally, pre-test FTIR protocol calculations (e.g., FRU, MAU, FCU) shall be performed using the de-resolved standard spectra.

11.2 *Data Analysis.* Various analytical programs are available for relating sample absorbance to a concentration standard. Calculated concentrations shall be verified by analyzing residual baselines after mathematically subtracting scaled reference spectra from the sample spectra. A full description of the data analysis and calculations is

contained in the FTIR Protocol (sections 4.0, 5.0, 6.0 and appendices). Correct the calculated concentrations in the sample spectra for differences in absorption path length and temperature between the reference and sample spectra using equation 6,

$$C_{corr} = \left(\frac{L_r}{L_s}\right)\left(\frac{T_s}{T_r}\right)\left(\frac{P_r}{P_s}\right)C_{calc} \qquad (6)$$

Where:

$C_{corr}$ = Concentration, corrected for path length.

$C_{calc}$ = Concentration, initial calculation (output of the analytical program designed for the compound).

$L_r$ = Reference spectra path length.

$L_s$ = Sample spectra path length.

$T_s$ = Absolute temperature of the sample gas, K.

$T_r$ = Absolute gas temperature of reference spectra, K.

$P_s$ = Sample cell pressure.

$P_r$ = Reference spectrum sample pressure.

*12.0 Method Performance*

12.1 *Spectral Quality*. Refer to the FTIR Protocol appendices for analytical requirements, evaluation of data quality, and analysis of uncertainty.

12.2 *Sampling QA/QC*. The analyte spike procedure of section 9 of this method, the QA spike of section 8.6.2 of this method, and the validation procedure of section 13 of this method are used to evaluate the performance of the sampling system and to quantify sampling system effects, if any, on the measured concentrations. This method is self-validating provided that the results meet the performance requirement of the QA spike in sections 9.0 and 8.6.2 of this method and results from a previous method validation study support the use of this method in the application. Several factors can contribute to uncertainty in the measurement of spiked samples. Factors which can be controlled to provide better accuracy in the spiking procedure are listed in sections 12.2.1 through 12.2.4 of this method.

12.2.1 *Flow meter*. An accurate mass flow meter is accurate to ±1 percent of its span. If a flow of 1 L/min is monitored with such a MFM, which is calibrated in the range of 0–5 L/min, the flow measurement has an uncertainty of 5 percent. This may be improved by re-calibrating the meter at the specific flow rate to be used.

12.2.2 *Calibration gas*. Usually the calibration standard is certified to within ±2 percent. With reactive analytes, such as HCl, the certified accuracy in a commercially available standard may be no better than ±5 percent.

12.2.3 *Temperature*. Temperature measurements of the cell shall be quite accurate. If practical, it is preferable to measure sample temperature directly, by inserting a thermocouple into the cell chamber instead of monitoring the cell outer wall temperature.

12.2.4 *Pressure*. Accuracy depends on the accuracy of the barometer, but fluctuations in pressure throughout a day may be as much as 2.5 percent due to weather variations.

*13.0 Method Validation Procedure*

This validation procedure, which is based on EPA Method 301 (40 CFR part 63, appendix (A), may be used to validate this method for the analytes in a gas matrix. Validation at one source may also apply to another type of source, if it can be shown that the exhaust gas characteristics are similar at both sources.

13.1 Section 6.0 of Method 301 (40 CFR part 63, appendix A), the Analyte Spike procedure, is used with these modifications. The statistical analysis of the results follows section 12.0 of EPA Method 301. Section 3 of this method defines terms that are not defined in Method 301.

13.1.1 The analyte spike is performed dynamically. This means the spike flow is continuous and constant as spiked samples are measured.

13.1.2 The spike gas is introduced at the back of the sample probe.

13.1.3 Spiked effluent is carried through all sampling components downstream of the probe.

13.1.4 A single FTIR system (or more) may be used to collect and analyze spectra (not quadruplicate integrated sampling trains).

13.1.5 All of the validation measurements are performed sequentially in a single ''run'' (section 3.26 of this method).

13.1.6 The measurements analyzed statistically are each independent (section 3.22 of this method).

13.1.7 A validation data set can consist of more than 12 spiked and 12 unspiked measurements.

13.2 *Batch Sampling*. The procedure in sections 13.2.1 through 13.2.2 may be used for stable processes. If process emissions are highly variable, the procedure in section 13.2.3 shall be used.

13.2.1 With a single FTIR instrument and sampling system, begin by collecting spectra of two unspiked samples. Introduce the spike flow into the sampling system and allow 10 cell volumes to purge the sampling system and FTIR cell. Collect spectra of two spiked samples. Turn off the spike and allow 10 cell volumes of unspiked sample to purge the FTIR cell. Repeat this procedure until the 24 (or more) samples are collected.

13.2.2 In batch sampling, collect spectra of 24 distinct samples. (Each distinct sample consists of filling the cell to ambient pressure after the cell has been evacuated.)

13.2.3 Alternatively, a separate probe assembly, line, and sample pump can be used for spiked sample. Verify and document that sampling conditions are the same in both the spiked and the unspiked sampling systems. This can be done by wrapping both sample lines in the same heated bundle. Keep the same flow rate in both sample lines. Measure samples in sequence in pairs. After two spiked samples are measured, evacuate the FTIR cell, and turn the manifold valve so that spiked sample flows to the FTIR cell. Allow the connecting line from the manifold to the FTIR cell to purge thoroughly (the time depends on the line length and flow rate). Collect a pair of spiked samples. Repeat the procedure until at least 24 measurements are completed.

13.3 Simultaneous Measurements With Two FTIR Systems. If unspiked effluent concentrations of the target analyte(s) vary significantly with time, it may be desirable to perform synchronized measurements of spiked and unspiked sample. Use two FTIR systems, each with its own cell and sampling system to perform simultaneous spiked and unspiked measurements. The optical configurations shall be similar, if possible. The sampling configurations shall be the same. One sampling system and FTIR analyzer shall be used to measure spiked effluent. The other sampling system and FTIR analyzer shall be used to measure unspiked flue gas. Both systems shall use the same sampling procedure (i.e., batch or continuous).

13.3.1 If batch sampling is used, synchronize the cell evacuation, cell filling, and collection of spectra. Fill both cells at the same rate (in cell volumes per unit time).

13.3.2 If continuous sampling is used, adjust the sample flow through each gas cell so that the same number of cell volumes pass through each cell in a given time (i.e. $TC_1 = TC_2$).

13.4 *Statistical Treatment.* The statistical procedure of EPA Method 301 of this appendix, section 12.0 is used to evaluate the bias and precision. For FTIR testing a validation ''run'' is defined as spectra of 24 independent samples, 12 of which are spiked with the analyte(s) and 12 of which are not spiked.

13.4.1 *Bias.* Determine the bias (defined by EPA Method 301 of this appendix, section 12.1.1) using equation 7:

$$B = S_m - CS$$

Where:

B = Bias at spike level.

$S_m$ = Mean concentration of the analyte spiked samples.

CS = Expected concentration of the spiked samples.

13.4.2 *Correction Factor.* Use section 6.3.2.2 of Method 301 of this appendix to evaluate the statistical significance of the bias. If it is determined that the bias is significant, then use section 6.3.3 of Method 301 to calculate a correction factor (CF). Analytical results of the test method are multiplied by the correction factor, if $0.7 \leq CF \leq 1.3$. If is determined that the bias is significant and CF >±30 percent, then the test method is considered to ''not valid.''

13.4.3 If measurements do not pass validation, evaluate the sampling system, instrument configuration, and analytical system to determine if improper set-up or a malfunction was the cause. If so, repair the system and repeat the validation.

### *14.0 Pollution Prevention*

The extracted sample gas is vented outside the enclosure containing the FTIR system and gas manifold after the analysis. In typical method applications the vented sample volume is a small fraction of the source volumetric flow and its composition is identical to that emitted from the source. When analyte spiking is used, spiked pollutants are vented with the extracted sample gas. Approximately $1.6 \times 10^{-4}$ to $3.2 \times 10^{-4}$ lbs of a single HAP may be vented to the atmosphere in a typical validation run of 3 hours. (This assumes a molar mass of 50 to 100 g, spike rate of 1.0 L/min, and a standard concentration of 100 ppm). Minimize emissions by keeping the spike flow off when not in use.

### *15.0 Waste Management*

Small volumes of laboratory gas standards can be vented through a laboratory hood. Neat samples must be packed and disposed according to applicable regulations. Surplus materials may be returned to supplier for disposal.

### *16.0 References*

1. ''Field Validation Test Using Fourier Transform Infrared (FTIR) Spectrometry To Measure Formaldehyde, Phenol and Methanol at a Wool Fiberglass Production Facility.'' Draft. U.S. Environmental Protection Agency Report, EPA Contract No. 68D20163, Work Assignment I–32, September 1994.

2. ''FTIR Method Validation at a Coal-Fired Boiler''. Prepared for U.S. Environmental Protection Agency, Research Triangle Park, NC. Publication No.: EPA–454/R95–004, NTIS No.: PB95–193199. July, 1993.

3. ''Method 301—Field Validation of Pollutant Measurement Methods from Various Waste Media,'' 40 CFR part 63, appendix A.

4. ''Molecular Vibrations; The Theory of Infrared and Raman Vibrational Spectra,'' E. Bright Wilson, J.C. Decius, and P.C. Cross, Dover Publications, Inc., 1980. For a less intensive treatment of molecular rotational-vibrational spectra see, for example, ''Physical Chemistry,'' G.M. Barrow, chapters 12, 13, and 14, McGraw Hill, Inc., 1979.

5. ''Fourier Transform Infrared Spectrometry,'' Peter R. Griffiths and James de

Haseth, Chemical Analysis, 83, 16–25,(1986), P.J. Elving, J.;D. Winefordner and I.M. Kolthoff (ed.), John Wiley and Sons.

6. ''Computer-Assisted Quantitative Infrared Spectroscopy,'' Gregory L. McClure (ed.), ASTM Special Publication 934 (ASTM), 1987.

7. ''Multivariate Least-Squares Methods Applied to the Quantitative Spectral Analysis of Multicomponent Mixtures,'' Applied Spectroscopy, 39(10), 73–84, 1985.

TABLE 1—EXAMPLE PRESENTATION OF SAMPLING DOCUMENTATION

| Sample time | Spectrum file name | Background file name | Sample conditioning | Process condition |
|---|---|---|---|---|
| | | | | |

| Sample time | Spectrum file | Interferogram | Resolution | Scans | Apodization | Gain | CTS Spectrum |
|---|---|---|---|---|---|---|---|
| | | | | | | | |

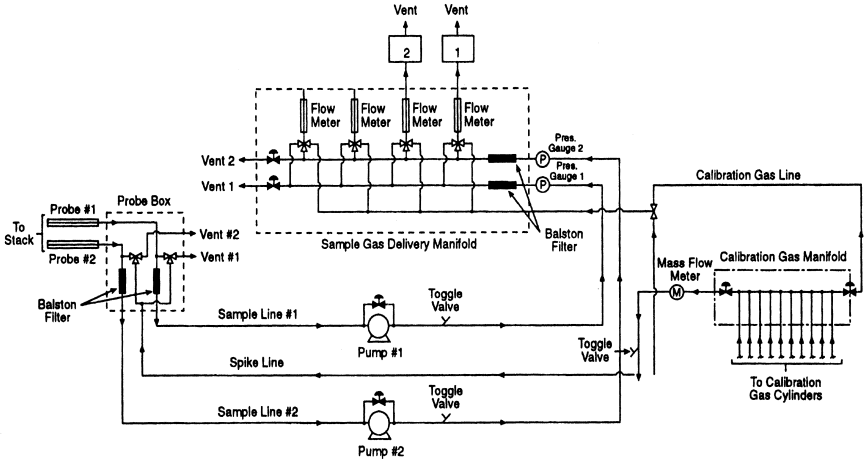


**Figure 1.** Extractive FTIR sampling system.

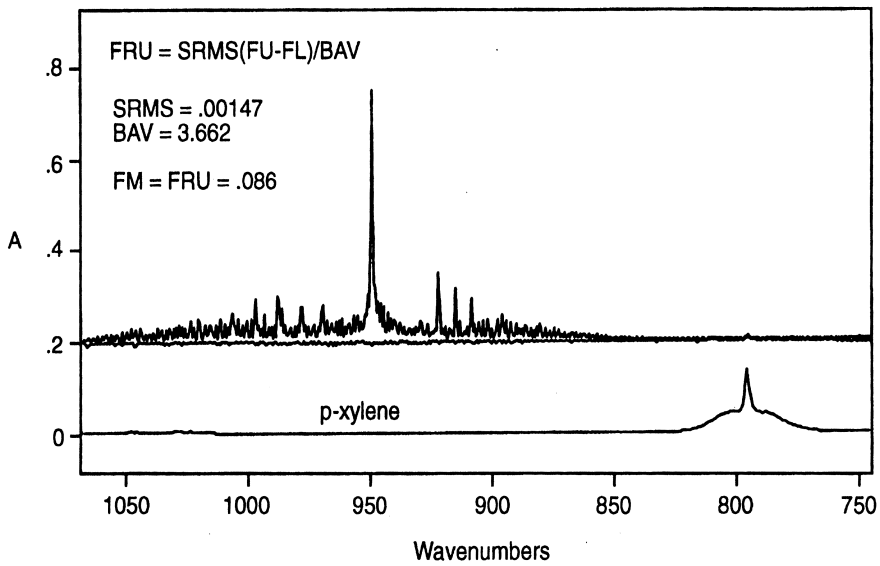


**Figure 2.** Fractional Reproducibility. Top: average of cts1031a and cts1101b. Bottom: Reference spectrum of p-xylene.

ADDENDUM TO TEST METHOD 320—PROTOCOL FOR THE USE OF EXTRACTIVE FOURIER TRANSFORM INFRARED (FTIR) SPECTROMETRY FOR THE ANALYSES OF GASEOUS EMISSIONS FROM STATIONARY SOURCES

*1.0 Introduction*

The purpose of this addendum is to set general guidelines for the use of modern FTIR spectroscopic methods for the analysis of gas samples extracted from the effluent of stationary emission sources. This addendum outlines techniques for developing and evaluating such methods and sets basic requirements for reporting and quality assurance procedures.

1.1 Nomenclature

1.1.1 Appendix A to this addendum lists definitions of the symbols and terms used in this Protocol, many of which have been taken directly from American Society for Testing and Materials (ASTM) publication E 131–90a, entitled ''Terminology Relating to Molecular Spectroscopy.''

1.1.2 Except in the case of background spectra or where otherwise noted, the term ''spectrum'' refers to a double-beam spectrum in units of absorbance vs. wavenumber ($cm^{-1}$).

1.1.3 The term ''Study'' in this addendum refers to a publication that has been subjected to EPA- or peer-review.

*2.0 Applicability and Analytical Principle*

2.1 *Applicability*. This Protocol applies to the determination of compound-specific concentrations in single- and multiple-component gas phase samples using double-beam absorption spectroscopy in the mid-infrared band. It does not specifically address other FTIR applications, such as single-beam spectroscopy, analysis of open-path (non-enclosed) samples, and continuous measurement techniques. If multiple spectrometers, absorption cells, or instrumental linewidths are used in such analyses, each distinct operational configuration of the system must be evaluated separately according to this Protocol.

2.2 Analytical Principle

2.2.1 In the mid-infrared band, most molecules exhibit characteristic gas phase absorption spectra that may be recorded by FTIR systems. Such systems consist of a source of mid-infrared radiation, an interferometer, an enclosed sample cell of known absorption pathlength, an infrared detector, optical elements for the transfer of infrared radiation between components, and gas flow control and measurement components. Adjunct and integral computer systems are used for controlling the instrument, processing the signal, and for performing both Fourier transforms and quantitative analyses of spectral data.

2.2.2 The absorption spectra of pure gases and of mixtures of gases are described by a linear absorbance theory referred to as Beer's Law. Using this law, modern FTIR systems use computerized analytical programs to quantify compounds by comparing the absorption spectra of known (reference) gas samples to the absorption spectrum of the sample gas. Some standard mathematical techniques used for comparisons are classical least squares, inverse least squares, cross-correlation, factor analysis, and partial least squares. Reference A describes several of these techniques, as well as additional techniques, such as differentiation methods, linear baseline corrections, and non-linear absorbance corrections.

### *3.0 General Principles of Protocol Requirements*

The characteristics that distinguish FTIR systems from gas analyzers used in instrumental gas analysis methods (e.g., Methods 6C and 7E of appendix A to part 60 of this chapter) are: (1) Computers are necessary to obtain and analyze data; (2) chemical concentrations can be quantified using previously recorded infrared reference spectra; and (3) analytical assumptions and results, including possible effects of interfering compounds, can be evaluated after the quantitative analysis. The following general principles and requirements of this Protocol are based on these characteristics.

3.1 *Verifiability and Reproducibility of Results.* Store all data and document data analysis techniques sufficient to allow an independent agent to reproduce the analytical results from the raw interferometric data.

3.2 *Transfer of Reference Spectra.* To determine whether reference spectra recorded under one set of conditions (e.g., optical bench, instrumental linewidth, absorption pathlength, detector performance, pressure, and temperature) can be used to analyze sample spectra taken under a different set of conditions, quantitatively compare ''calibration transfer standards'' (CTS) and reference spectra as described in this Protocol.

NOTE: The CTS may, but need not, include analytes of interest). To effect this, record the absorption spectra of the CTS (a) immediately before and immediately after recording reference spectra and (b) immediately after recording sample spectra.

3.3 *Evaluation of FTIR Analyses.* The applicability, accuracy, and precision of FTIR measurements are influenced by a number of interrelated factors, which may be divided into two classes:

3.3.1 *Sample-Independent Factors.* Examples are system configuration and performance (e.g., detector sensitivity and infrared source output), quality and applicability of reference absorption spectra, and type of mathematical analyses of the spectra. These factors define the fundamental limitations of FTIR measurements for a given system configuration. These limitations may be estimated from evaluations of the system before samples are available. For example, the detection limit for the absorbing compound under a given set of conditions may be estimated from the system noise level and the strength of a particular absorption band. Similarly, the accuracy of measurements may be estimated from the analysis of the reference spectra.

3.3.2 *Sample-Dependent Factors.* Examples are spectral interferants (e.g., water vapor and $CO_2$) or the overlap of spectral features of different compounds and contamination deposits on reflective surfaces or transmitting windows. To maximize the effectiveness of the mathematical techniques used in spectral analysis, identification of interferants (a standard initial step) and analysis of samples (includes effect of other analytical errors) are necessary. Thus, the Protocol requires post-analysis calculation of measurement concentration uncertainties for the detection of these potential sources of measurement error.

### *4.0 Pre-Test Preparations and Evaluations*

Before testing, demonstrate the suitability of FTIR spectrometry for the desired application according to the procedures of this section.

4.1 *Identify Test Requirements.* Identify and record the test requirements described in sections 4.1.1 through 4.1.4 of this addendum. These values set the desired or required goals of the proposed analysis; the description of methods for determining whether these goals are actually met during the analysis comprises the majority of this Protocol.

4.1.1 Analytes (specific chemical species) of interest. Label the analytes from i = 1 to I.

4.1.2 Analytical uncertainty limit ($AU_i$). The $AU_i$ is the maximum permissible fractional uncertainty of analysis for the $i^{th}$ analyte concentration, expressed as a fraction of the analyte concentration in the sample.

4.1.3 Required detection limit for each analyte ($DL_i$, ppm). The detection limit is the lowest concentration of an analyte for which its overall fractional uncertainty ($OFU_i$) is required to be less than its analytical uncertainty limit ($AU_i$).

4.1.4 Maximum expected concentration of each analyte ($CMAX_i$, ppm).

4.2 *Identify Potential Interferants.* Considering the chemistry of the process or results of previous studies, identify potential interferants, i.e., the major effluent constituents and any relatively minor effluent constituents that possess either strong absorption characteristics or strong structural similarities to any analyte of interest. Label them 1 through $N_j$, where the subscript ''j''

pertains to potential interferants. Estimate the concentrations of these compounds in the effluent ($CPOT_j$, ppm).

4.3 *Select and Evaluate the Sampling System.* Considering the source, e.g., temperature and pressure profiles, moisture content, analyte characteristics, and particulate concentration), select the equipment for extracting gas samples. Recommended are a particulate filter, heating system to maintain sample temperature above the dew point for all sample constituents at all points within the sampling system (including the filter), and sample conditioning system (e.g., coolers, water-permeable membranes that remove water or other compounds from the sample, and dilution devices) to remove spectral interferants or to protect the sampling and analytical components. Determine the minimum absolute sample system pressure ($P_{min}$, mmHg) and the infrared absorption cell volume ($V_{SS}$, liter). Select the techniques and/or equipment for the measurement of sample pressures and temperatures.

4.4 *Select Spectroscopic System.* Select a spectroscopic configuration for the application. Approximate the absorption pathlength ($L_S'$, meter), sample pressure ($P_S'$, kPa), absolute sample temperature $T_S'$, and signal integration period ($t_{SS}$, seconds) for the analysis. Specify the nominal minimum instrumental linewidth (MIL) of the system. Verify that the fractional error at the approximate values $P_S'$ and $T_S'$ is less than one half the smallest value $AU_i$ (see section 4.1.2 of this addendum).

4.5 Select Calibration Transfer Standards (CTS's). Select CTS's that meet the criteria listed in sections 4.5.1, 4.5.2, and 4.5.3 of this addendum.

NOTE: It may be necessary to choose preliminary analytical regions (see section 4.7 of this addendum), identify the minimum analyte linewidths, or estimate the system noise level (see section 4.12 of this addendum) before selecting the CTS. More than one compound may be needed to meet the criteria; if so, obtain separate cylinders for each compound.

4.5.1 The central wavenumber position of each analytical region shall lie within 25 percent of the wavenumber position of at least one CTS absorption band.

4.5.2 The absorption bands in section 4.5.1 of this addendum shall exhibit peak absorbances greater than ten times the value $RMS_{EST}$ (see section 4.12 of this addendum) but less than 1.5 absorbance units.

4.5.3 At least one absorption CTS band within the operating range of the FTIR instrument shall have an instrument-independent linewidth no greater than the narrowest analyte absorption band. Perform and document measurements or cite Studies to determine analyte and CTS compound linewidths.

4.5.4 For each analytical region, specify the upper and lower wavenumber positions ($FFU_m$ and $FFL_m$, respectively) that bracket the CTS absorption band or bands for the associated analytical region. Specify the wavenumber range, FNU to FNL, containing the absorption band that meets the criterion of section 4.5.3 of this addendum.

4.5.5 Associate, whenever possible, a single set of CTS gas cylinders with a set of reference spectra. Replacement CTS gas cylinders shall contain the same compounds at concentrations within 5 percent of that of the original CTS cylinders; the entire absorption spectra (not individual spectral segments) of the replacement gas shall be scaled by a factor between 0.95 and 1.05 to match the original CTS spectra.

4.6 Prepare Reference Spectra

NOTE: Reference spectra are available in a permanent soft copy from the EPA spectral library on the EMTIC (Emission Measurement Technical Information Center) computer bulletin board; they may be used if applicable.

4.6.1 Select the reference absorption pathlength ($L_R$) of the cell.

4.6.2 Obtain or prepare a set of chemical standards for each analyte, potential and known spectral interferants, and CTS. Select the concentrations of the chemical standards to correspond to the top of the desired range.

4.6.2.1 *Commercially-Prepared Chemical Standards.* Chemical standards for many compounds may be obtained from independent sources, such as a specialty gas manufacturer, chemical company, or commercial laboratory. These standards (accurate to within ±2 percent) shall be prepared according to EPA Traceability Protocol (see Reference D) or shall be traceable to NIST standards. Obtain from the supplier an estimate of the stability of the analyte concentration. Obtain and follow all of the supplier's recommendations for recertifying the analyte concentration.

4.6.2.2 *Self-Prepared Chemical Standards.* Chemical standards may be prepared by diluting certified commercially prepared chemical gases or pure analytes with ultrapure carrier (UPC) grade nitrogen according to the barometric and volumetric techniques generally described in Reference A, section A4.6.

4.6.3 Record a set of the absorption spectra of the CTS {R1}, then a set of the reference spectra at two or more concentrations in duplicate over the desired range (the top of the range must be less than 10 times that of the bottom), followed by a second set of CTS spectra {R2}. (If self-prepared standards are used, see section 4.6.5 of this addendum before disposing of any of the standards.) The maximum accepted standard concentration-pathlength product (ASCPP) for each compound shall be higher than the

maximum estimated concentration-pathlength products for both analytes and known interferants in the effluent gas. For each analyte, the minimum ASCPP shall be no greater than ten times the concentration-pathlength product of that analyte at its required detection limit.

4.6.4 Permanently store the background and interferograms in digitized form. Document details of the mathematical process for generating the spectra from these interferograms. Record the sample pressure ($P_R$), sample temperature ($T_R$), reference absorption pathlength ($L_R$), and interferogram signal integration period ($t_{SR}$). Signal integration periods for the background interferograms shall be $\geq t_{SR}$. Values of $P_R$, $L_R$, and $t_{SR}$ shall not deviate by more than ±1 percent from the time of recording [R1] to that of recording [R2].

4.6.5 If self-prepared chemical standards are employed and spectra of only two concentrations are recorded for one or more compounds, verify the accuracy of the dilution technique by analyzing the prepared standards for those compounds with a secondary (non-FTIR) technique in accordance with sections 4.6.5.1 through 4.6.5.4 of this addendum.

4.6.5.1 Record the response of the secondary technique to each of the four standards prepared.

4.6.5.2 Perform a linear regression of the response values (dependant variable) versus the accepted standard concentration (ASC) values (independent variable), with the regression constrained to pass through the zero-response, zero ASC point.

4.6.5.3 Calculate the average fractional difference between the actual response values and the regression-predicted values (those calculated from the regression line using the four ASC values as the independent variable).

4.6.5.4 If the average fractional difference value calculated in section 4.6.5.3 of this addendum is larger for any compound than the corresponding $AU_i$, the dilution technique is not sufficiently accurate and the reference spectra prepared are not valid for the analysis.

4.7 *Select Analytical Regions*. Using the general considerations in section 7 of Reference A and the spectral characteristics of the analytes and interferants, select the analytical regions for the application. Label them m = 1 to M. Specify the lower, center and upper wavenumber positions of each analytical region ($FL_m$, $FC_m$, and $FU_m$, respectively). Specify the analytes and interferants which exhibit absorption in each region.

4.8 *Determine Fractional Reproducibility Uncertainties*. Using appendix E of this addendum, calculate the fractional reproducibility uncertainty for each analyte ($FRU_i$) from a comparison of [R1] and [R2]. If $FRU_i > AU_i$ for any analyte, the reference spectra generated in accordance with section 4.6 of this addendum are not valid for the application.

4.9 *Identify Known Interferants*. Using appendix B of this addendum, determine which potential interferants affect the analyte concentration determinations. Relabel these potential interferant as ''known'' interferants, and designate these compounds from k = 1 to K. Appendix B to this addendum also provides criteria for determining whether the selected analytical regions are suitable.

4.10 Prepare Computerized Analytical Programs

4.10.1 Choose or devise mathematical techniques (e.g, classical least squares, inverse least squares, cross-correlation, and factor analysis) based on equation 4 of Reference A that are appropriate for analyzing spectral data by comparison with reference spectra.

4.10.2 Following the general recommendations of Reference A, prepare a computer program or set of programs that analyzes all of the analytes and known interferants, based on the selected analytical regions (section 4.7 of this addendum) and the prepared reference spectra (section 4.6 of this addendum). Specify the baseline correction technique (e.g., determining the slope and intercept of a linear baseline contribution in each analytical region) for each analytical region, including all relevant wavenumber positions.

4.10.3 Use programs that provide as output [at the reference absorption pathlength ($L_R$), reference gas temperature ($T_R$), and reference gas pressure ($P_R$)] the analyte concentrations, the known interferant concentrations, and the baseline slope and intercept values. If the sample absorption pathlength ($L_S$), sample gas temperature ($T_S$), or sample gas pressure ($P_S$) during the actual sample analyses differ from $L_R$, $T_R$, and $P_R$, use a program or set of programs that applies multiplicative corrections to the derived concentrations to account for these variations, and that provides as output both the corrected and uncorrected values. Include in the report of the analysis (see section 7.0 of this addendum) the details of any transformations applied to the original reference spectra (e.g., differentiation), in such a fashion that all analytical results may be verified by an independent agent from the reference spectra and data spectra alone.

4.11 *Determine the Fractional Calibration Uncertainty*. Calculate the fractional calibration uncertainty for each analyte (FCUi) according to appendix F of this addendum, and compare these values to the fractional uncertainty limits ($AU_i$; see section 4.1.2 of this addendum). If $FCU_i > AU_i$, either the reference spectra or analytical programs for that analyte are unsuitable.

4.12 *Verify System Configuration Suitability*. Using appendix C of this addendum, measure or obtain estimates of the noise level ($RMS_{EST}$, absorbance) of the FTIR system.

Alternatively, construct the complete spectrometer system and determine the values $RMS_{Sm}$ using appendix G of this addendum. Estimate the minimum measurement uncertainty for each analyte ($MAU_i$, ppm) and known interferant ($MIU_k$, ppm) using appendix D of this addendum. Verify that (a) $MAU_i < (AU_i)(DL_i)$, FRUi $< AU_i$, and FCUi $< AU_i$ for each analyte and that (b) the CTS chosen meets the requirements listed in sections 4.5.1 through 4.5.5 of this addendum.

*5.0 Sampling and Analysis Procedure*

5.1 *Analysis System Assembly and Leak-Test.* Assemble the analysis system. Allow sufficient time for all system components to reach the desired temperature. Then, determine the leak-rate ($L_R$) and leak volume ($V_L$), where $V_L = L_R\ t_{SS}$. Leak volumes shall be ≤4 percent of $V_{SS}$.

5.2 *Verify Instrumental Performance.* Measure the noise level of the system in each analytical region using the procedure of appendix G of this addendum. If any noise level is higher than that estimated for the system in section 4.12 of this addendum, repeat the calculations of appendix D of this addendum and verify that the requirements of section 4.12 of this addendum are met; if they are not, adjust or repair the instrument and repeat this section.

5.3 Determine the Sample Absorption Pathlength

Record a background spectrum. Then, fill the absorption cell with CTS at the pressure $P_R$ and record a set of CTS spectra [R3]. Store the background and unscaled CTS single beam interferograms and spectra. Using appendix H of this addendum, calculate the sample absorption pathlength ($L_S$) for each analytical region. The values $L_S$ shall not differ from the approximated sample pathlength $L_S'$ (see section 4.4 of this addendum) by more than 5 percent.

5.4 *Record Sample Spectrum.* Connect the sample line to the source. Either evacuate the absorption cell to an absolute pressure below 5 mmHg before extracting a sample from the effluent stream into the absorption cell, or pump at least ten cell volumes of sample through the cell before obtaining a sample. Record the sample pressure $P_S$. Generate the absorbance spectrum of the sample. Store the background and sample single beam interferograms, and document the process by which the absorbance spectra are generated from these data. (If necessary, apply the spectral transformations developed in section 5.6.2 of this addendum). The resulting sample spectrum is referred to below as $S_S$.

NOTE: Multiple sample spectra may be recorded according to the procedures of section 5.4 of this addendum before performing sections 5.5 and 5.6 of this addendum.

5.5 *Quantify Analyte Concentrations.* Calculate the unscaled analyte concentrations $RUA_i$ and unscaled interferant concentrations $RUI_K$ using the programs developed in section 4 of this addendum. To correct for pathlength and pressure variations between the reference and sample spectra, calculate the scaling factor, $R_{LPS}$ using equation A.1,

$$R_{LPS} = \left(L_R P_R T_S\right) / \left(L_S P_S T_R\right) \quad (A.1)$$

Calculate the final analyte and interferant concentrations $RSA_i$ and $RSI_k$ using equations A.2 and A.3,

$$RSA_i = R_{LPS} RUA_i \quad (A.2)$$

$$RSI_k = R_{LPS} RUI_k \quad (A.3)$$

5.6 *Determine Fractional Analysis Uncertainty.* Fill the absorption cell with CTS at the pressure $P_S$. Record a set of CTS spectra [R4]. Store the background and CTS single beam interferograms. Using appendix H of this addendum, calculate the fractional analysis uncertainty (FAU) for each analytical region. If the FAU indicated for any analytical region is greater than the required accuracy requirements determined in sections 4.1.1 through 4.1.4 of this addendum, then comparisons to previously recorded reference spectra are invalid in that analytical region, and the analyst shall perform one or both of the procedures of sections 5.6.1 through 5.6.2 of this addendum.

5.6.1 Perform instrumental checks and adjust the instrument to restore its performance to acceptable levels. If adjustments are made, repeat sections 5.3, 5.4 (except for the recording of a sample spectrum), and 5.5 of this addendum to demonstrate that acceptable uncertainties are obtained in all analytical regions.

5.6.2 Apply appropriate mathematical transformations (e.g., frequency shifting, zero-filling, apodization, smoothing) to the spectra (or to the interferograms upon which the spectra are based) generated during the performance of the procedures of section 5.3 of this addendum. Document these transformations and their reproducibility. Do not apply multiplicative scaling of the spectra, or any set of transformations that is mathematically equivalent to multiplicative scaling. Different transformations may be applied to different analytical regions. Frequency shifts shall be less than one-half the minimum instrumental linewidth, and must be applied to all spectral data points in an analytical region. The mathematical transformations may be retained for the analysis if they are also applied to the appropriate analytical regions of all sample spectra recorded, and if all original sample spectra are digitally stored. Repeat sections 5.3, 5.4 (except the recording of a sample spectrum), and 5.5 of this addendum to demonstrate

that these transformations lead to acceptable calculated concentration uncertainties in all analytical regions.

*6.0 Post-Analysis Evaluations*

Estimate the overall accuracy of the analyses performed in accordance with sections 5.1 through 5.6 of this addendum using the procedures of sections 6.1 through 6.3 of this addendum.

6.1 *Qualitatively Confirm the Assumed Matrix*. Examine each analytical region of the sample spectrum for spectral evidence of unexpected or unidentified interferants. If found, identify the interfering compounds (see Reference C for guidance) and add them to the list of known interferants. Repeat the procedures of section 4 of this addendum to include the interferants in the uncertainty calculations and analysis procedures. Verify that the MAU and FCU values do not increase beyond acceptable levels for the application requirements. Re-calculate the analyte concentrations (section 5.5 of this addendum) in the affected analytical regions.

6.2 *Quantitatively Evaluate Fractional Model Uncertainty (FMU)*. Perform the procedures of either section 6.2.1 or 6.2.2 of this addendum:

6.2.1 Using appendix I of this addendum, determine the fractional model error (FMU) for each analyte.

6.2.2 Provide statistically determined uncertainties FMU for each analyte which are equivalent to two standard deviations at the 95 percent confidence level. Such determinations, if employed, must be based on mathematical examinations of the pertinent sample spectra (not the reference spectra alone). Include in the report of the analysis (see section 7.0 of this addendum) a complete description of the determination of the concentration uncertainties.

6.3 *Estimate Overall Concentration Uncertainty (OCU)*. Using appendix J of this addendum, determine the overall concentration uncertainty (OCU) for each analyte. If the OCU is larger than the required accuracy for any analyte, repeat sections 4 and 6 of this addendum.

*7.0 Reporting Requirements*

[Documentation pertaining to virtually all the procedures of sections 4, 5, and 6 will be required. Software copies of reference spectra and sample spectra will be retained for some minimum time following the actual testing.]

*8.0 References*

(A) Standard Practices for General Techniques of Infrared Quantitative Analysis (American Society for Testing and Materials, Designation E 168–88).

(B) The Coblentz Society Specifications for Evaluation of Research Quality Analytical Infrared Reference Spectra (Class II); Anal. Chemistry 47, 945A (1975); Appl. Spectroscopy 444, pp. 211–215, 1990.

(C) Standard Practices for General Techniques for Qualitative Infrared Analysis, American Society for Testing and Materials, Designation E 1252–88.

(D) ''EPA Traceability Protocol for Assay and Certification of Gaseous Calibration Standards,'' U.S. Environmental Protection Agency Publication No. EPA/600/R–93/224, December 1993.

APPENDIX A TO ADDENDUM TO METHOD 320—DEFINITIONS OF TERMS AND SYMBOLS

A.1 *Definitions of Terms*. All terms used in this method that are not defined below have the meaning given to them in the CAA and in subpart A of this part.

*Absorption band* means a contiguous wavenumber region of a spectrum (equivalently, a contiguous set of absorbance spectrum data points) in which the absorbance passes through a maximum or a series of maxima.

*Absorption pathlength* means the distance in a spectrophotometer, measured in the direction of propagation of the beam of radiant energy, between the surface of the specimen on which the radiant energy is incident and the surface of the specimen from which it is emergent.

*Analytical region* means a contiguous wavenumber region (equivalently, a contiguous set of absorbance spectrum data points) used in the quantitative analysis for one or more analytes.

NOTE: The quantitative result for a single analyte may be based on data from more than one analytical region.

*Apodization* means modification of the ILS function by multiplying the interferogram by a weighing function whose magnitude varies with retardation.

*Background spectrum* means the single beam spectrum obtained with all system components without sample present.

*Baseline* means any line drawn on an absorption spectrum to establish a reference point that represents a function of the radiant power incident on a sample at a given wavelength.

*Beers's law* means the direct proportionality of the absorbance of a compound in a homogeneous sample to its concentration.

*Calibration transfer standard (CTS) gas* means a gas standard of a compound used to achieve and/or demonstrate suitable quantitative agreement between sample spectra and the reference spectra; see section 4.5.1 of this addendum.

*Compound* means a substance possessing a distinct, unique molecular structure.

*Concentration (c)* means the quantity of a compound contained in a unit quantity of sample. The unit ''ppm'' (number, or mole, basis) is recommended.

*Concentration-pathlength product* means the mathematical product of concentration of the species and absorption pathlength. For reference spectra, this is a known quantity; for sample spectra, it is the quantity directly determined from Beer's law. The units ''centimeters-ppm'' or ''meters-ppm'' are recommended.

*Derivative absorption spectrum* means a plot of rate of change of absorbance or of any function of absorbance with respect to wavelength or any function of wavelength.

*Double beam spectrum* means a transmission or absorbance spectrum derived by dividing the sample single beam spectrum by the background spectrum.

NOTE: The term ''double-beam'' is used elsewhere to denote a spectrum in which the sample and background interferograms are collected simultaneously along physically distinct absorption paths. Here, the term denotes a spectrum in which the sample and background interferograms are collected at different times along the same absorption path.

*Fast Fourier transform (FFT)* means a method of speeding up the computation of a discrete FT by factoring the data into sparse matrices containing mostly zeros.

*Flyback* means interferometer motion during which no data are recorded.

*Fourier transform (FT)* means the mathematical process for converting an amplitude-time spectrum to an amplitude-frequency spectrum, or vice versa.

*Fourier transform infrared (FTIR) spectrometer* means an analytical system that employs a source of mid-infrared radiation, an interferometer, an enclosed sample cell of known absorption pathlength, an infrared detector, optical elements that transfer infrared radiation between components, and a computer system. The time-domain detector response (interferogram) is processed by a Fourier transform to yield a representation of the detector response vs. infrared frequency.

NOTE: When FTIR spectrometers are interfaced with other instruments, a slash should be used to denote the interface; e.g., GC/FTIR; HPCL/FTIR, and the use of FTIR should be explicit; i.e., FTIR not IR.

*Frequency*, $v$ means the number of cycles per unit time.

*Infrared* means the portion of the electromagnetic spectrum containing wavelengths from approximately 0.78 to 800 microns.

*Interferogram*, $I(\sigma)$ means record of the modulated component of the interference signal measured as a function of retardation by the detector.

*Interferometer* means device that divides a beam of radiant energy into two or more paths, generates an optical path difference between the beams, and recombines them in order to produce repetitive interference maxima and minima as the optical retardation is varied.

*Linewidth* means the full width at half maximum of an absorption band in units of wavenumbers ($cm^{-1}$).

*Mid-infrared* means the region of the electromagnetic spectrum from approximately 400 to 5000 $cm^{-1}$.

*Reference spectra* means absorption spectra of gases with known chemical compositions, recorded at a known absorption pathlength, which are used in the quantitative analysis of gas samples.

*Retardation*, $\sigma$ means optical path difference between two beams in an interferometer; also known as ''optical path difference'' or ''optical retardation.''

*Scan* means digital representation of the detector output obtained during one complete motion of the interferometer's moving assembly or assemblies.

*Scaling* means application of a multiplicative factor to the absorbance values in a spectrum.

*Single beam spectrum* means Fourier-transformed interferogram, representing the detector response vs. wavenumber.

NOTE: The term ''single-beam'' is used elsewhere to denote any spectrum in which the sample and background interferograms are recorded on the same physical absorption path; such usage differentiates such spectra from those generated using interferograms recorded along two physically distinct absorption paths (see ''double-beam spectrum'' above). Here, the term applies (for example) to the two spectra used directly in the calculation of transmission and absorbance spectra of a sample.

*Standard reference material* means a reference material, the composition or properties of which are certified by a recognized standardizing agency or group.

NOTE: The equivalent ISO term is ''certified reference material.''

*Transmittance*, $T$ means the ratio of radiant power transmitted by the sample to the radiant power incident on the sample. Estimated in FTIR spectroscopy by forming the ratio of the single-beam sample and background spectra.

*Wavenumber*, $\bar{v}$ means the number of waves per unit length.

NOTE: The usual unit of wavenumber is the reciprocal centimeter, $cm^{-1}$. The wavenumber is the reciprocal of the wavelength, $\lambda$, when $\lambda$ is expressed in centimeters.

*Zero-filling* means the addition of zero-valued points to the end of a measured interferogram.

NOTE: Performing the FT of a zero-filled interferogram results in correctly interpolated points in the computed spectrum.

A.2 *Definitions of Mathematical Symbols.* The symbols used in equations in this protocol are defined as follows:

(1) A, absorbance = the logarithm to the base 10 of the reciprocal of the transmittance (T).

$$A = \log_{10}\left(\frac{1}{T}\right) = -\log_{10} T$$

(2) $AAI_{im}$ = band area of the $i^{th}$ analyte in the $m^{th}$ analytical region, at the concentration ($CL_i$) corresponding to the product of its required detection limit ($DL_i$) and analytical uncertainty limit ($AU_i$) .

(3) $AAV_{im}$ = average absorbance of the $i^{th}$ analyte in the $m^{th}$ analytical region, at the concentration ($CL_i$) corresponding to the product of its required detection limit ($DL_i$) and analytical uncertainty limit ($AU_i$).

(4) ASC, accepted standard concentration = the concentration value assigned to a chemical standard.

(5) ASCPP, accepted standard concentration-pathlength product = for a chemical standard, the product of the ASC and the sample absorption pathlength. The units ''centimeters-ppm'' or ''meters-ppm'' are recommended.

(6) $AU_i$, analytical uncertainty limit = the maximum permissible fractional uncertainty of analysis for the $i^{th}$ analyte concentration, expressed as a fraction of the analyte concentration determined in the analysis.

(7) $AVT_m$ = average estimated total absorbance in the $m^{th}$ analytical region.

(8) $CKWN_k$ = estimated concentration of the $k^{th}$ known interferant.

(9) $CMAX_i$ = estimated maximum concentration of the $i^{th}$ analyte.

(10) $CPOT_j$ = estimated concentration of the $j^{th}$ potential interferant.

(11) $DL_i$, required detection limit = for the $i^{th}$ analyte, the lowest concentration of the analyte for which its overall fractional uncertainty ($OFU_i$) is required to be less than the analytical uncertainty limit ($AU_i$).

(12) $FC_m$ = center wavenumber position of the $m^{th}$ analytical region.

(13) $FAU_i$, fractional analytical uncertainty = calculated uncertainty in the measured concentration of the $i^{th}$ analyte because of errors in the mathematical comparison of reference and sample spectra.

(14) $FCU_i$, fractional calibration uncertainty = calculated uncertainty in the measured concentration of the $i^{th}$ analyte because of errors in Beer's law modeling of the reference spectra concentrations.

(15) $FFL_m$ = lower wavenumber position of the CTS absorption band associated with the $m^{th}$ analytical region.

(16) $FFU_m$ = upper wavenumber position of the CTS absorption band associated with the $m^{th}$ analytical region.

(17) $FL_m$ = lower wavenumber position of the $m^{th}$ analytical region.

(18) $FMU_i$, fractional model uncertainty = calculated uncertainty in the measured concentration of the $i^{th}$ analyte because of errors in the absorption model employed.

(19) $FN_L$ = lower wavenumber position of the CTS spectrum containing an absorption band at least as narrow as the analyte absorption bands.

(20) $FN_U$ = upper wavenumber position of the CTS spectrum containing an absorption band at least as narrow as the analyte absorption bands.

(21) $FRU_i$, fractional reproducibility uncertainty = calculated uncertainty in the measured concentration of the $i^{th}$ analyte because of errors in the reproducibility of spectra from the FTIR system.

(22) $FU_m$ = upper wavenumber position of the $m^{th}$ analytical region.

(23) $IAI_{jm}$ = band area of the $j^{th}$ potential interferant in the $m^{th}$ analytical region, at its expected concentration ($CPOT_j$).

(24) $IAV_{im}$ = average absorbance of the $i^{th}$ analyte in the $m^{th}$ analytical region, at its expected concentration ($CPOT_j$).

(25) $ISC_{i\ or\ k}$, indicated standard concentration = the concentration from the computerized analytical program for a single-compound reference spectrum for the $i^{th}$ analyte or $k^{th}$ known interferant.

(26) kPa = kilo-Pascal (see Pascal).

(27) $L_S'$ = estimated sample absorption pathlength.

(28) $L_R$ = reference absorption pathlength.

(29) $L_S$ = actual sample absorption pathlength.

(30) $MAU_i$ = mean of the $MAU_{im}$ over the appropriate analytical regions.

(31) $MAU_{im}$, minimum analyte uncertainty = the calculated minimum concentration for which the analytical uncertainty limit ($AU_i$) in the measurement of the $i^{th}$ analyte, based on spectral data in the $m^{th}$ analytical region, can be maintained.

(32) $MIU_j$ = mean of the $MIU_{jm}$ over the appropriate analytical regions.

(33) $MIU_{jm}$, minimum interferant uncertainty = the calculated minimum concentration for which the analytical uncertainty limit $CPOT_j/20$ in the measurement of the $j^{th}$ interferant, based on spectral data in the $m^{th}$ analytical region, can be maintained.

(34) MIL, minimum instrumental linewidth = the minimum linewidth from the FTIR system, in wavenumbers.

NOTE: The MIL of a system may be determined by observing an absorption band known (through higher resolution examinations) to be narrower than indicated by the system. The MIL is fundamentally limited by the retardation of the interferometer, but

is also affected by other operational parameters (e.g., the choice of apodization).

(35) $N_i$ = number of analytes.

(36) $N_j$ = number of potential interferants.

(37) $N_k$ = number of known interferants.

(38) $N_{scan}$ = the number of scans averaged to obtain an interferogram.

(39) $OFU_i$ = the overall fractional uncertainty in an analyte concentration determined in the analysis ($OFU_i$ = MAX[$FRU_i$, $FCU_i$, $FAU_i$, $FMU_i$]).

(40) Pascal (Pa) = metric unit of static pressure, equal to one Newton per square meter; one atmosphere is equal to 101,325 Pa; 1/760 atmosphere (one Torr, or one millimeter Hg) is equal to 133.322 Pa.

(41) $P_{min}$ = minimum pressure of the sampling system during the sampling procedure.

(42) $P_S'$ = estimated sample pressure.

(43) $P_R$ = reference pressure.

(44) $P_S$ = actual sample pressure.

(45) $RMS_{Sm}$ = measured noise level of the FTIR system in the $m^{th}$ analytical region.

(46) RMSD, root mean square difference = a measure of accuracy determined by the following equation:

$$RMSD = \sqrt{\left(\frac{1}{n}\right)\sum_{i=1}^{n} e_i^2}$$

Where:

n = the number of observations for which the accuracy is determined.

$e_i$ = the difference between a measured value of a property and its mean value over the n observations.

NOTE: The RMSD value ''between a set of n contiguous absorbance values ($A_i$) and the mean of the values'' ($A_M$) is defined as

$$RMSD = \sqrt{\left(\frac{1}{n}\right)\sum_{i-1}^{n}\left(A_i - A_M\right)^2}$$

(47) $RSA_i$ = the (calculated) final concentration of the $i^{th}$ analyte.

(48) $RSI_k$ = the (calculated) final concentration of the $k^{th}$ known interferant.

(49) $t_{scan}$, scan time = time used to acquire a single scan, not including flyback.

(50) $t_S$, signal integration period = the period of time over which an interferogram is averaged by addition and scaling of individual scans. In terms of the number of scans $N_{scan}$ and scan time $t_{scan}$, $t_S = N_{scan}t_{scan}$.

(51) $t_{SR}$ = signal integration period used in recording reference spectra.

(52) $t_{SS}$ = signal integration period used in recording sample spectra.

(53) $T_R$ = absolute temperature of gases used in recording reference spectra.

(54) $T_S$ = absolute temperature of sample gas as sample spectra are recorded.

(55) TP, Throughput = manufacturer's estimate of the fraction of the total infrared power transmitted by the absorption cell and transfer optics from the interferometer to the detector.

(56) $V_{SS}$ = volume of the infrared absorption cell, including parts of attached tubing.

(57) $W_{ik}$ = weight used to average over analytical regions k for quantities related to the analyte i; see appendix D of this addendum.

## APPENDIX B TO ADDENDUM TO METHOD 320—IDENTIFYING SPECTRAL INTERFERANTS

### *B.1 General*

B.1.1 Assume a fixed absorption pathlength equal to the value $L_S'$.

B.1.2 Use band area calculations to compare the relative absorption strengths of the analytes and potential interferants. In the $m^{th}$ analytical region ($FL_m$ to $FU_m$), use either rectangular or trapezoidal approximations to determine the band areas described below (see Reference A, sections A.3.1 through A.3.3). Document any baseline corrections applied to the spectra.

B.1.3 Use the average total absorbance of the analytes and potential interferants in each analytical region to determine whether the analytical region is suitable for analyte concentration determinations.

NOTE: The average absorbance in an analytical region is the band area divided by the width of the analytical region in wavenumbers. The average total absorbance in an analytical region is the sum of the average absorbances of all analytes and potential interferants.

### *B.2 Calculations*

B.2.1 Prepare spectral representations of each analyte at the concentration $CL_i$ = ($DL_i$)($AU_i$), where $DL_i$ is the required detection limit and $AU_i$ is the maximum permissible analytical uncertainty. For the $m^{th}$ analytical region, calculate the band area ($AAI_{im}$) and average absorbance ($AAV_{im}$) from these scaled analyte spectra.

B.2.2 Prepare spectral representations of each potential interferant at its expected concentration ($CPOT_j$). For the $m^{th}$ analytical region, calculate the band area ($IAI_{jm}$) and average absorbance ($IAV_{jm}$) from these scaled potential interferant spectra.

B.2.3 Repeat the calculation for each analytical region, and record the band area results in matrix form as indicated in Figure B.1.

B.2.4 If the band area of any potential interferant in an analytical region is greater than the one-half the band area of any analyte (i.e., $IAI_{jm}$ >0.5 $AAI_{im}$ for any pair ij and any m), classify the potential interferant as a known interferant. Label the known interferants k = 1 to K. Record the results in matrix form as indicated in Figure B.2.

B.2.5 Calculate the average total absorbance ($AVT_m$) for each analytical region and record the values in the last row of the matrix described in Figure B.2. Any analytical region where $AVT_m$ >2.0 is unsuitable.

FIGURE B.1 Presentation of Potential Interferant Calculations.

| | Analytical Regions 1 . . . . . M |
|---|---|
| **Analyte Labels** | |
| 1 | $AAI_{11}$ . . . $AAI_{1M}$ |
| . | . . |
| . | . . |
| I | $AAI_{I1}$ . . . $AAI_{IM}$ |
| **Potential Interferant Labels** | |
| 1 | $IAI_{11}$ . . . $IAI_{1M}$ |
| . | . . |
| . | . . |
| J | $IAI_{J1}$ . . . $IAI_{JM}$ |

FIGURE B.2 Presentation of Known Interferant Calculations

| | Analytical Regions 1 . . . . . M |
|---|---|
| **Analyte Labels** | |
| 1 | $AAI_{11}$ . . . . $AAI_{1M}$ |
| . | . . |
| . | . . |
| I | $AAI_{I1}$ . . . . $AAI_{IM}$ |
| **Known Interferant Labels** | |
| 1 | $IAI_{11}$ . . . . $IAI_{1M}$ |
| . | . . |
| . | . . |
| K | $IAI_{K1}$ . . . . $IAI_{KM}$ |
| | 323 |
| **Total Average Absorbance** | $AVT_1$ $AVT_M$ |

APPENDIX C TO ADDENDUM TO METHOD 320—ESTIMATING NOISE LEVELS

*C.1 General*

C.1.1 The root-mean-square (RMS) noise level is the standard measure of noise in this addendum. The RMS noise level of a contiguous segment of a spectrum is defined as the RMS difference (RMSD) between the absorbance values which form the segment and the mean value of that segment (see appendix A of this addendum).

C.1.2 The RMS noise value in double-beam absorbance spectra is assumed to be inversely proportional to: (a) the square root of the signal integration period of the sample single beam spectra from which it is formed, and (b) the total infrared power transmitted through the interferometer and absorption cell.

C.1.3 Practically, the assumption of C.1.2 allows the RMS noise level of a complete system to be estimated from the quantities described in sections C.1.3.1 through C.1.3.4:

C.1.3.1 $RMS_{MAN}$, the noise level of the system (in absorbance units), without the absorption cell and transfer optics, *under those conditions necessary to yield the specified minimum instrumental linewidth,* e.g., Jacquinot stop size.

C.1.3.2 $t_{MAN}$, the manufacturer's signal integration time used to determine $RMS_{MAN}$.

C.1.3.3 $t_{SS}$, the signal integration time for the analyses.

C.1.3.4 TP, the manufacturer's estimate of the fraction of the total infrared power transmitted by the absorption cell and transfer optics from the interferometer to the detector.

*C.2 Calculations*

C.2.1 Obtain the values of $RMS_{MAN}$, $t_{MAN}$, and TP from the manufacturers of the equipment, or determine the noise level by direct measurements with the completely constructed system proposed in section 4 of this addendum.

C.2.2 Calculate the noise value of the system ($RMS_{EST}$) using equation C.1.

$$RMS_{EST} = RMS_{MAN}\ TP\sqrt{\frac{t_{ss}}{t_{MAN}}} \qquad (C.1)$$

APPENDIX D TO ADDENDUM TO METHOD 320—ESTIMATING MINIMUM CONCENTRATION MEASUREMENT UNCERTAINTIES (MAU AND MIU)

*D.1 General*

Estimate the minimum concentration measurement uncertainties for the $i^{th}$ analyte ($MAU_i$) and $j^{th}$ interferant ($MIU_j$) based on the spectral data in the $m^{th}$ analytical region by comparing the analyte band area in the analytical region ($AAI_{im}$) and estimating or measuring the noise level of the system ($RMS_{EST}$ or $RMS_{SM}$).

NOTE: For a single analytical region, the MAU or MIU value is the concentration of the analyte or interferant for which the band area is equal to the product of the analytical region width (in wavenumbers) and the noise level of the system (in absorbance units). If data from more than one analytical region are used in the determination of an analyte concentration, the MAU or MIU is the mean of the separate MAU or MIU values calculated for each analytical region.

*D.2 Calculations*

D.2.1 For each analytical region, set RMS = $RMS_{SM}$ if measured (appendix G of this addendum), or set RMS = $RMS_{EST}$ if estimated (appendix C of this addendum).

D.2.2 For each analyte associated with the analytical region, calculate $MAU_{im}$ using equation D.1,

$$MAU_{im} = (RMS)\left(DL_i\right)\left(AU_i\right)\frac{\left(FU_m - FL_m\right)}{AAI_{im}} \qquad (D.1)$$

D.2.3 If only the $m^{th}$ analytical region is used to calculate the concentration of the $i^{th}$ analyte, set $MAU_i = MAU_{im}$.

D.2.4 If more than one analytical region is used to calculate the concentration of the $i^{th}$ analyte, set $MAU_i$ equal to the weighted mean of the appropriate $MAU_{im}$ values calculated above; the weight for each term in the mean is equal to the fraction of the total wavenumber range used for the calculation

represented by each analytical region. Mathematically, if the set of analytical regions employed is [m′], then the MAU for each analytical region is given by equation D.2.

$$MAU_i = \sum_{k \in \{m'\}} W_k MAU_{ik} \qquad (D.2)$$

where the weight $W_{ik}$ is defined for each term in the sum as

$$W_{ik} = \left(FM_k - FL_k\right)\left(\sum_{p \in \{m'\}} \left[FM_p - FL_p\right]\right)^{-1} \qquad (D.3)$$

D.2.5 Repeat sections D.2.1 through D.2.4 of this appendix to calculate the analogous values $MIU_j$ for the interferants j = 1 to J. Replace the value ($AU_i$) ($DL_i$) in equation D.1 with $CPOT_j/20$; replace the value $AAI_{im}$ in equation D.1 with $IAI_{jm}$.

APPENDIX E TO ADDENDUM TO METHOD 320—DETERMINING FRACTIONAL REPRODUCIBILITY UNCERTAINTIES (FRU)

*E.1 General*

To estimate the reproducibility of the spectroscopic results of the system, compare the CTS spectra recorded before and after preparing the reference spectra. Compare the difference between the spectra to their average band area. Perform the calculation for each analytical region on the portions of the CTS spectra associated with that analytical region.

*E.2 Calculations*

E.2.1 The CTS spectra {R1} consist of N spectra, denoted by $S_{1i}$, i = 1, N. Similarly, the CTS spectra {R2} consist of N spectra, denoted by $S_{2i}$, i = 1, N. Each $S_{ki}$ is the spectrum of a single compound, where i denotes the compound and k denotes the set {} of which $S_{ki}$ is a member. Form the spectra $S_3$ according to $S_{3i} = S_{2i} - S_{1i}$ for each i. Form the spectra $S_4$ according to $S_{4i} = [S_{2i} + S_{1i}]/2$ for each i.

E.2.2 Each analytical region m is associated with a portion of the CTS spectra $S_{2i}$ and $S_{1i}$, for a particular i, with lower and upper wavenumber limits $FFL_m$ and $FFU_m$, respectively.

E.2.3 For each m and the associated i, calculate the band area of $S_{4i}$ in the wavenumber range $FFU_m$ to $FFL_m$. Follow the guidelines of section B.1.2 of this addendum for this band area calculation. Denote the result by $BAV_m$.

E.2.4 For each m and the associated i, calculate the RMSD of $S_{3i}$ between the absorbance values and their mean in the wavenumber range $FFU_m$ to $FFL_m$. Denote the result by $SRMS_m$.

E.2.5 For each analytical region m, calculate $FM_m$ using equation E.1,

$$FM_m = SRMS_m\left(FFU_m - FFL_m\right)/BAV_m \qquad (E.1)$$

E.2.6 If only the $m^{th}$ analytical region is used to calculate the concentration of the $i^{th}$ analyte, set $FRU_i = FM_m$.

E.2.7 If a number $p_i$ of analytical regions are used to calculate the concentration of the $i^{th}$ analyte, set $FRU_i$ equal to the weighted mean of the appropriate $FM_m$ values calculated according to section E.2.5. Mathematically, if the set of analytical regions employed is {m′}, then $FRU_i$ is given by equation E.2,

$$FRU_i = \sum_{k \in \{m'\}} W_{ik} FM_k \qquad (E.2)$$

where the $W_{ik}$ are calculated as described in appendix D of this addendum.

APPENDIX F OF ADDENDUM TO METHOD 320—DETERMINING FRACTIONAL CALIBRATION UNCERTAINTIES (FCU)

*F.1 General*

F.1.1 The concentrations yielded by the computerized analytical program applied to each single-compound reference spectrum are defined as the indicated standard concentrations (ISC's). The ISC values for a single compound spectrum should ideally equal the accepted standard concentration (ASC) for one analyte or interferant, and should ideally be zero for all other compounds. Variations from these results are caused by errors in the ASC values, variations from the Beer's law (or modified Beer's law) model

used to determine the concentrations, and noise in the spectra. When the first two effects dominate, the systematic nature of the errors is often apparent and the analyst shall take steps to correct them.

F.1.2 When the calibration error appears non-systematic, apply the procedures of sections F.2.1 through F.2.3 of this appendix to estimate the fractional calibration uncertainty (FCU) for each compound. The FCU is defined as the mean fractional error between the ASC and the ISC for all reference spectra with non-zero ASC for that compound. The FCU for each compound shall be less than the required fractional uncertainty specified in section 4.1 of this addendum.

F.1.3 The computerized analytical programs shall also be required to yield acceptably low concentrations for compounds with ISC = 0 when applied to the reference spectra. The ISC of each reference spectrum for each analyte or interferant shall not exceed that compound's minimum measurement uncertainty (MAU or MIU).

*F.2 Calculations*

F.2.1 Apply each analytical program to each reference spectrum. Prepare a similar table to that in Figure F.1 to present the ISC and ASC values for each analyte and interferant in each reference spectrum. Maintain the order of reference file names and compounds employed in preparing Figure F.1.

F.2.2 For all reference spectra in Figure F.1, verify that the absolute values of the ISC's are less than the compound's MAU (for analytes) or MIU (for interferants).

F.2.3 For each analyte reference spectrum, calculate the quantity (ASC-ISC)/ASC. For each analyte, calculate the mean of these values (the $FCU_i$ for the $i^{th}$ analyte) over all reference spectra. Prepare a similar table to that in Figure F.2 to present the $FCU_i$ and analytical uncertainty limit ($AU_i$) for each analyte.

FIGURE F.1—PRESENTATION OF ACCEPTED STANDARD CONCENTRATIONS (ASC'S) AND INDICATED STANDARD CONCENTRATIONS (ISC'S)

| Compound name | Reference spectrum file name | ASC (ppm) | ISC (ppm) | | | | | |
|---|---|---|---|---|---|---|---|---|
| | | | | | Analytes i = 1 j = 1 | Interferants I J | | |
| | | | | | | | | |

FIGURE F.2—PRESENTATION OF FRACTIONAL CALIBRATION UNCERTAINTIES (FCU'S) AND ANALYTICAL UNCERTAINTIES (AU'S)

| Analyte name | FCU (%) | AU (%) |
|---|---|---|
| | | |

APPENDIX G TO ADDENDUM TO METHOD 320—MEASURING NOISE LEVELS

*G.1 General*

The root-mean-square (RMS) noise level is the standard measure of noise. The RMS noise level of a contiguous segment of a spectrum is the RMSD between the absorbance values that form the segment and the mean value of the segment (see appendix A of this addendum).

*G.2 Calculations*

G.2.1 Evacuate the absorption cell or fill it with UPC grade nitrogen at approximately one atmosphere total pressure.

G.2.2 Record two single beam spectra of signal integration period $t_{SS}$.

G.2.3 Form the double beam absorption spectrum from these two single beam spectra, and calculate the noise level $RMS_{Sm}$ in the M analytical regions.

APPENDIX H OF ADDENDUM TO METHOD 320—DETERMINING SAMPLE ABSORPTION PATHLENGTH ($L_S$) AND FRACTIONAL ANALYTICAL UNCERTAINTY (FAU)

*H.1 General*

Reference spectra recorded at absorption pathlength ($L_R$), gas pressure ($P_R$), and gas absolute temperature ($T_R$) may be used to determine analyte concentrations in samples whose spectra are recorded at conditions different from that of the reference spectra, i.e., at absorption pathlength ($L_S$), absolute temperature ($T_S$), and pressure ($P_S$). This appendix describes the calculations for estimating the fractional uncertainty (FAU) of this practice. It also describes the calculations for determining the sample absorption pathlength from comparison of CTS spectra, and for preparing spectra for further instrumental and procedural checks.

H.1.1 Before sampling, determine the sample absorption pathlength using least squares analysis. Determine the ratio $L_S/L_R$ by comparing the spectral sets {R1} and {R3}, which are recorded using the same CTS at $L_S$ and $L_R$, and $T_S$ and $T_R$, but both at $P_R$.

H.1.2 Determine the fractional analysis uncertainty (FAU) for each analyte by comparing a scaled CTS spectral set, recorded at $L_S$, $T_S$, and $P_S$, to the CTS reference spectra of the same gas, recorded at $L_R$, $T_R$, and $P_R$. Perform the quantitative comparison after recording the sample spectra, based on band areas of the spectra in the CTS absorbance band associated with each analyte.

*H.2 Calculations*

H.2.1 *Absorption Pathlength Determination*. Perform and document separate linear baseline corrections to each analytical region in the spectral sets {R1} and {R3}. Form a one-dimensional array $A_R$ containing the absorbance values from all segments of {R1} that are associated with the analytical regions; the members of the array are $A_{Ri}$, i = 1, n. Form a similar one-dimensional array $A_S$ from the absorbance values in the spectral set {R3}; the members of the array are $A_{Si}$, i = 1, n. Based on the model $A_S = rA_R + E$, determine the least-squares estimate of r, the value of r which minimizes the square error $E^2$. Calculate the sample absorption pathlength, $L_S$, using equation H.1,

$$L_s = r'\left(T_s/T_R\right)L_R \qquad \text{(H.1)}$$

H.2.2 *Fractional Analysis Uncertainty*. Perform and document separate linear baseline corrections to each analytical region in the spectral sets {R1} and {R4}. Form the arrays $A_S$ and $A_R$ as described in section H.2.1 of this appendix, using values from {R1} to form $A_R$, and values from {R4} to form $A_S$. Calculate $NRMS_E$ and $IA_{AV}$ using equations H.2 and H.3,

$$NRMS_E = \sqrt{\sum_{i=1}^{n}\left[A_{Si} - \left(\frac{T_R}{T_S}\right)\left(\frac{L_S}{L_R}\right)\left(\frac{P_S}{P_R}\right)A_{Ri}\right]} \qquad \text{(H.2)}$$

$$IA_{AV} = \frac{1}{2}\sum_{i=1}^{n}\left[A_{Si} + \left(\frac{T_R}{T_S}\right)\left(\frac{L_S}{L_R}\right)\left(\frac{P_S}{P_R}\right)A_{Ri}\right] \qquad \text{(H.3)}$$

The fractional analytical uncertainty, FAU, is given by equation H.4,

$$FAU = \frac{NRMS_E}{IA_{AV}} \qquad \text{(H.4)}$$

APPENDIX I TO ADDENDUM TO METHOD 320—DETERMINING FRACTIONAL MODEL UNCERTAINTIES (FMU)

*I.1 General*

To prepare analytical programs for FTIR analyses, the sample constituents must first be assumed. The calculations in this appendix, based upon a simulation of the sample spectrum, shall be used to verify the appropriateness of these assumptions. The simulated spectra consist of the sum of single compound reference spectra scaled to represent their contributions to the sample absorbance spectrum; scaling factors are based on the indicated standard concentrations (ISC) and measured (sample) analyte and interferant concentrations, the sample and reference absorption pathlengths, and the sample and reference gas pressures. No band-shape correction for differences in the temperature of the sample and reference spectra gases is made; such errors are included in the FMU estimate. The actual and simulated sample spectra are quantitatively compared to determine the fractional model uncertainty; this comparison uses the reference

spectra band areas and residuals in the difference spectrum formed from the actual and simulated sample spectra.

*I.2 Calculations*

I.2.1 For each analyte (with scaled concentration $RSA_i$), select a reference spectrum $SA_i$ with indicated standard concentration $ISC_i$. Calculate the scaling factors, $RA_i$, using equation I.1,

$$RA_i = \frac{T_R\ L_S\ P_S\ \ RSA_i}{T_S\ L_R\ P_R\ \ ISC_i} \qquad (I.1)$$

Form the spectra $SAC_i$ by scaling each $SA_i$ by the factor $RA_i$.

I.2.2 For each interferant, select a reference spectrum $SI_k$ with indicated standard concentration $ISC_k$. Calculate the scaling factors, $RI_k$, using equation I.2,

$$RI_k = \frac{T_R\ L_S\ P_S\ RSI_k}{T_S\ L_R\ P_R\ ISC_k} \qquad (I.2)$$

Form the spectra $SIC_k$ by scaling each $SI_k$ by the factor $RI_k$.

I.2.3 For each analytical region, determine by visual inspection which of the spectra $SAC_i$ and $SIC_k$ exhibit absorbance bands within the analytical region. Subtract each spectrum $SAC_i$ and $SIC_k$ exhibiting absorbance from the sample spectrum $S_S$ to form the spectrum $SUB_S$. To save analysis time and to avoid the introduction of unwanted noise into the subtracted spectrum, it is recommended that the calculation be made (1) only for those spectral data points within the analytical regions, and (2) for each analytical region separately using the original spectrum $S_S$.

I.2.4 For each analytical region m, calculate the RMSD of $SUB_S$ between the absorbance values and their mean in the region $FFU_m$ to $FFL_m$. Denote the result by $RMSS_m$.

I.2.5 For each analyte i, calculate $FM_m$, using equation I.3,

$$FM_m = \frac{RMSS_m\left(FFU_m - FFL_m\right)AU_i DL_i}{AAI_i\ RSA_i} \qquad (I.3)$$

for each analytical region associated with the analyte.

I.2.6 If only the $m^{th}$ analytical region is used to calculate the concentration of the $i^{th}$ analyte, set $FMU_i = FM_m$.

I.2.7 If a number of analytical regions are used to calculate the concentration of the $i^{th}$ analyte, set $FM_i$ equal to the weighted mean of the appropriate $FM_m$ values calculated using equation I–3. Mathematically, if the set of analytical regions employed is {m′}, then the fractional model uncertainty, FMU, is given by equation I.4,

$$FMU_i = \sum_{k \in \{m'\}} W_{ik} FM_k \qquad (I.4)$$

where $W_{ik}$ is calculated as described in appendix D of this addendum.

APPENDIX J OF ADDENDUM TO METHOD 320—DETERMINING OVERALL CONCENTRATION UNCERTAINTIES (OCU)

The calculations in this addendum estimate the measurement uncertainties for various FTIR measurements. The lowest possible overall concentration uncertainty (OCU) for an analyte is its MAU value, which is an estimate of the absolute concentration uncertainty when spectral noise dominates the measurement error. However, if the product of the largest fractional concentration uncertainty (FRU, FCU, FAU, or FMU) and the measured concentration of an analyte exceeds the MAU for the analyte, then the OCU is this product. In mathematical terms, set $OFU_i = MAX\{FRU_i, FCU_i, FAU_i, FMU_i\}$ and $OCU_i = MAX\{RSA_i*OFU_i, MAU_i\}$.

TEST METHOD 321—MEASUREMENT OF GASEOUS HYDROGEN CHLORIDE EMISSIONS AT PORTLAND CEMENT KILNS BY FOURIER TRANSFORM INFRARED (FTIR) SPECTROSCOPY

*1.0 Introduction*

This method should be performed by those persons familiar with the operation of Fourier Transform Infrared (FTIR) instrumentation in the application to source sampling. This document describes the sampling procedures for use in the application of FTIR spectrometry for the determination of vapor phase hydrogen chloride (HCl) concentrations both before and after particulate matter control devices installed at portland cement kilns. A procedure for analyte spiking is included for quality assurance. This method is considered to be self validating provided that the requirements listed in section 9 of this method are followed. The analytical procedures for interpreting infrared spectra from emission measurements are described in the ''Protocol For The Use of Extractive

Fourier Transform Infrared (FTIR) Spectrometry in Analyses of Gaseous Emissions From Stationary Industrial Sources'', included as an addendum to proposed Method 320 of this appendix (hereafter referred to as the ''FTIR Protocol)''. References 1 and 2 describe the use of FTIR spectrometry in field measurements. Sample transport presents the principal difficulty in directly measuring HCl emissions. This identical problem must be overcome by any extractive measurement method. HCl is reactive and water soluble. The sampling system must be adequately designed to prevent sample condensation in the system.

1.1 Scope and Application

This method is specifically designed for the application of FTIR Spectrometry in extractive measurements of gaseous HCl concentrations in portland cement kiln emissions.

*1.2 Applicability*

This method applies to the measurement of HCl [CAS No. 7647–01–0]. This method can be applied to the determination of HCl concentrations both before and after particulate matter control devices installed at portland cement manufacturing facilities. This method applies to either continuous flow through measurement (with isolated sample analysis) or grab sampling (batch analysis). HCl is measured using the mid-infrared spectral region for analysis (about 400 to 4000 $cm^{-1}$ or 25 to 2.5 μm). Table 1 lists the suggested analytical region for quantification of HCl taking the interference from water vapor into consideration.

TABLE 1—EXAMPLE ANALYTICAL REGION FOR HCL

| Compound | Analytical region ($cm^{-1}$) | Potential interferants |
|---|---|---|
| Hydrogen chloride | 2679–2840 | Water. |

1.3 Method Range and Sensitivity

1.3.1 The analytical range is determined by the instrumental design and the composition of the gas stream. For practical purposes there is no upper limit to the range because the pathlength may be reduced or the sample may be diluted. The lower detection range depends on (1) the absorption coefficient of the compound in the analytical frequency region, (2) the spectral resolution, (3) the interferometer sampling time, (4) the detector sensitivity and response, and (5) the absorption pathlength.

1.3.2 The practical lower quantification range is usually higher than that indicated by the instrument performance in the laboratory, and is dependent upon (1) the presence of interfering species in the exhaust gas (notably $H_2O$), (2) the optical alignment of the gas cell and transfer optics, and (3) the quality of the reflective surfaces in the cell (cell throughput). Under typical test conditions (moisture content of up to 30 percent, 10 meter absorption path length, liquid nitrogen-cooled IR detector, 0.5 $cm^{-1}$ resolution, and an interferometer sampling time of 60 seconds) a typical lower quantification range for HCl is 0.1 to 1.0 ppm.

1.4 Data Quality Objectives

1.4.1 In designing or configuring the analytical system, data quality is determined by measuring of the root mean square deviation (RMSD) of the absorbance values within a chosen spectral (analytical) region. The RMSD provides an indication of the signal-to-noise ratio (S/N) of the spectral baseline. Appendix D of the FTIR Protocol (the addendum to Method 320 of this appendix) presents a discussion of the relationship between the RMSD, lower detection limit, $DL_i$, and analytical uncertainty, $AU_i$. It is important to consider the target analyte quantification limit when performing testing with FTIR instrumentation, and to optimize the system to achieve the desired detection limit.

1.4.2 Data quality is determined by measuring the root mean square (RMS) noise level in each analytical spectral region (appendix C of the FTIR Protocol). The RMS noise is defined as the root mean square deviation (RMSD) of the absorbance values in an analytical region from the mean absorbance value in the same region. Appendix D of the *FTIR Protocol* defines the minimum analyte uncertainty (MAU), and how the RMSD is used to calculate the MAU. The $MAU_{im}$ is the minimum concentration of the ith analyte in the mth analytical region for which the analytical uncertainty limit can be maintained. Table 2 presents example values of AU and MAU using the analytical region presented in Table 1.

TABLE 2—EXAMPLE PRE-TEST PROTOCOL CALCULATIONS FOR HYDROGEN CHLORIDE

| | HCl |
|---|---|
| Reference concentration (ppm-meters)/K | 11.2 |
| Reference Band area | 2.881 |
| DL (ppm-meters)/K | 0.1117 |
| AU | 0.2 |
| CL (DL × AU) | 0.02234 |
| FL ($cm^{-1}$) | 2679.83 |
| FU ($cm^{-1}$) | 2840.93 |
| FC ($cm^{-1}$) | 2760.38 |
| AAI (ppm-meters)/K | 0.06435 |

TABLE 2—EXAMPLE PRE-TEST PROTOCOL CALCULATIONS FOR HYDROGEN CHLORIDE—Continued

| | HCl |
|---|---|
| RMSD | 2.28E–03 |
| MAU (ppm-meters)/K | 1.28E–01 |
| MAU ppm at 22 meters and 250 °F | .0.2284 |

*2.0 Summary of Method*

2.1 Principle

See Method 320 of this appendix. HCl can also undergo rotation transitions by absorbing energy in the far-infrared spectral region. The rotational transitions are superimposed on the vibrational fundamental to give a series of lines centered at the fundamental vibrational frequency, 2885 $cm^{-1}$. The frequencies of absorbance and the pattern of rotational/vibrational lines are unique to HCl. When this distinct pattern is observed in an infrared spectrum of an unknown sample, it unequivocally identifies HCl as a component of the mixture. The infrared spectrum of HCl is very distinctive and cannot be confused with the spectrum of any other compound. See Reference 6.

2.2 *Sampling and Analysis.* See Method 320 of this appendix.

2.3 *Operator Requirements.* The analyst must have knowledge of spectral patterns to choose an appropriate absorption path length or determine if sample dilution is necessary. The analyst should also understand FTIR instrument operation well enough to choose instrument settings that are consistent with the objectives of the analysis.

*3.0 Definitions*

See appendix A of the FTIR Protocol.

*4.0 Interferences*

This method will not measure HCl under conditions: (1) where the sample gas stream can condense in the sampling system or the instrumentation, or (2) where a high moisture content sample relative to the analyte concentrations imparts spectral interference due to the water vapor absorbance bands. For measuring HCl the first (sampling) consideration is more critical. Spectral interference from water vapor is not a significant problem except at very high moisture levels and low HCl concentrations.

4.1 *Analytical Interferences.* See Method 320 of this appendix.

4.1.1 *Background Interferences.* See Method 320 of this appendix.

4.1.2 *Spectral interferences.* Water vapor can present spectral interference for FTIR gas analysis of HCl. Therefore, the water vapor in the spectra of kiln gas samples must be accounted for. This means preparing at least one spectrum of a water vapor sample where the moisture concentration is close to that in the kiln gas.

4.2 *Sampling System Interferences.* The principal sampling system interferant for measuring HCl is water vapor. Steps must be taken to ensure that no condensation forms anywhere in the probe assembly, sample lines, or analytical instrumentation. Cold spots anywhere in the sampling system must be avoided. The extent of sampling system bias in the FTIR analysis of HCl depends on concentrations of potential interferants, moisture content of the gas stream, temperature of the gas stream, temperature of sampling system components, sample flow rate, and reactivity of HCl with other species in the gas stream (e.g., ammonia). For measuring HCl in a wet gas stream the temperatures of the gas stream, sampling components, and the sample flow rate are of primary importance. Analyte spiking with HCl is performed to demonstrate the integrity of the sampling system for transporting HCl vapor in the flue gas to the FTIR instrument. See section 9 of this method for a complete description of analyte spiking.

*5.0 Safety*

5.1 Hydrogen chloride vapor is corrosive and can cause irritation or severe damage to respiratory system, eyes and skin. Exposure to this compound should be avoided.

5.2 This method may involve sampling at locations having high positive or negative pressures, or high concentrations of hazardous or toxic pollutants, and can not address all safety problems encountered under these diverse sampling conditions. It is the responsibility of the tester(s) to ensure proper safety and health practices, and to determine the applicability of regulatory limitations before performing this test method. Leak-check procedures are outlined in section 8.2 of Method 320 of this appendix.

*6.0 Equipment and Supplies*

NOTE: Mention of trade names or specific products does not constitute endorsement by the Environmental Protection Agency.

6.1 *FTIR Spectrometer and Detector.* An FTIR Spectrometer system (interferometer, transfer optics, gas cell and detector) having the capability of measuring HCl to the predetermined minimum detectable level required (see section 4.1.3 of the FTIR Protocol). The system must also include an accurate means to control and/or measure the temperature of the FTIR gas analysis cell, and a personal computer with compatible software that provides real-time updates of the spectral profile during sample and spectral collection.

6.2 *Pump.* Capable of evacuating the FTIR cell volume to 1 Torr (133.3 Pascals) within two minutes (for batch sample analysis).

6.3 *Mass Flow Meters/Controllers*. To accurately measure analyte spike flow rate, having the appropriate calibrated range and a stated accuracy of ±2 percent of the absolute measurement value. This device must be calibrated with the major component of the calibration/spike gas (e.g., nitrogen) using an NIST traceable bubble meter or equivalent. Single point calibration checks should be performed daily in the field. When spiking HCl, the mass flow meter/controller should be thoroughly purged before and after introduction of the gas to prevent corrosion of the interior parts.

6.4 *Polytetrafluoroethane tubing*. Diameter and length suitable to connect cylinder regulators.

6.5 *Stainless Steel tubing*. Type 316 of appropriate length and diameter for heated connections.

6.6 *Gas Regulators*. Purgeable HCl regulator.

6.7 *Pressure Gauge*. Capable of measuring pressure from 0 to 1000 Torr (133.3 Pa = 1 Torr) within ±5 percent.

6.8 *Sampling Probe*. Glass, stainless steel or other appropriate material of sufficient length and physical integrity to sustain heating, prevent adsorption of analytes and capable of reaching gas sampling point.

6.9 *Sampling Line*. Heated 180 °C (360 °F) and fabricated of either stainless steel, polytetrafluoroethane or other material that prevents adsorption of HCl and transports effluent to analytical instrumentation. The extractive sample line must have the capability to transport sample gas to the analytical components as well as direct heated calibration spike gas to the calibration assembly located at the sample probe. It is important to minimize the length of heated sample line.

6.10 *Particulate Filters*. A sintered stainless steel filter rated at 20 microns or greater may be placed at the inlet of the probe (for removal of large particulate matter). A heated filter (Balston or equivalent) rated at 1 micron is necessary for primary particulate matter removal, and shall be placed immediately after the heated probe. The filter/filter holder temperature should be maintained at 180 °C (360 °F).

6.11 *Calibration/Analyte Spike Assembly*. A heated three-way valve assembly (or equivalent) to introduce surrogate spikes into the sampling system at the outlet of the probe before the primary particulate filter.

6.12 *Sample Extraction Pump*. A leak-free heated head pump (KNF Neuberger or equivalent) capable of extracting sample effluent through entire sampling system at a rate which prevents analyte losses and minimizes analyzer response time. The pump should have a heated by-pass and may be placed either before the FTIR instrument or after. If the sample pump is located upstream of the FTIR instrument, it must be fabricated from materials non-reactive to HCl. The sampling system and FTIR measurement system shall allow the operator to obtain at least six sample spectra during a one-hour period.

6.13 *Barometer*. For measurement of barometric pressure.

6.14 *Gas Sample Manifold*. A distribution manifold having the capabilities listed in sections 6.14.1 through 6.14.4;

6.14.1 Delivery of calibration gas directly to the analytical instrumentation;

6.14.2 Delivery of calibration gas to the sample probe (system calibration or analyte spike) via a heated traced sample line;

6.14.3 Delivery of sample gas (kiln gas, spiked kiln gas, or system calibrations) to the analytical instrumentation;

6.14.4 Delivery (optional) of a humidified nitrogen sample stream.

6.15 *Flow Measurement Device*. Type S Pitot tube (or equivalent) and Magnahelic set for measurement of volumetric flow rate.

### *7.0 Reagents and Standards*

HCl can be purchased in a standard compressed gas cylinder. The most stable HCl cylinder mixture available has a concentration certified at ±5 percent. Such a cylinder is suitable for performing analyte spiking because it will provide reproducible samples. The stability of the cylinder can be monitored over time by periodically performing direct FTIR analysis of cylinder samples. It is recommended that a 10–50 ppm cylinder of HCl be prepared having from 2–5 ppm SF6 as a tracer compound. (See sections 7.1 through 7.3 of Method 320 of this appendix for a complete description of the use of existing HCl reference spectra. See section 9.1 of Method 320 of this appendix for a complete discussion of standard concentration selection.)

### *8.0 Sample Collection, Preservation and Storage*

See also Method 320 of this appendix.

8.1 *Pretest*. A screening test is ideal for obtaining proper data that can be used for preparing analytical program files. Information from literature surveys and source personnel is also acceptable. Information about the sampling location and gas stream composition is required to determine the optimum sampling system configuration for measuring HCl. Determine the percent moisture of the kiln gas by Method 4 of appendix A to part 60 of this chapter or by performing a wet bulb/dry bulb measurement. Perform a preliminary traverse of the sample duct or stack and select the sampling point(s). Acquire an initial spectrum and determine the optimum operational pathlength of the instrument.

8.2 *Leak-Check*. See Method 320 of this appendix, section 8.2 for direction on performing leak-checks.

8.3 *Background Spectrum.* See Method 320 of this appendix, section 8.5 for direction in background spectral acquisition.

8.4 *Pre-Test Calibration Transfer Standard (Direct Instrument Calibration).* See Method 320 of this appendix, section 8.3 for direction in CTS spectral acquisition.

8.5 *Pre-Test System Calibration.* See Method 320 of this appendix, sections 8.6.1 through 8.6.2 for direction in performing system calibration.

8.6 Sampling

8.6.1 *Extractive System.* An extractive system maintained at 180 °C (360 °F) or higher which is capable of directing a total flow of at least 12 L/min to the sample cell is required (References 1 and 2). Insert the probe into the duct or stack at a point representing the average volumetric flow rate and 25 percent of the cross sectional area. Co-locate an appropriate flow monitoring device with the sample probe so that the flow rate is recorded at specified time intervals during emission testing (e.g., differential pressure measurements taken every 10 minutes during each run).

8.6.2 *Batch Samples.* Evacuate the absorbance cell to 5 Torr (or less) absolute pressure before taking first sample. Fill the cell with kiln gas to ambient pressure and record the infrared spectrum, then evacuate the cell until there is no further evidence of infrared absorption. Repeat this procedure, collecting a total of six separate sample spectra within a 1-hour period.

8.6.3 *Continuous Flow Through Sampling.* Purge the FTIR cell with kiln gas for a time period sufficient to equilibrate the entire sampling system and FTIR gas cell. The time required is a function of the mechanical response time of the system (determined by performing the system calibration with the CTS gas or equivalent), and by the chemical reactivity of the target analytes. If the effluent target analyte concentration is not variable, observation of the spectral up-date of the flowing gas sample should be performed until equilibration of the sample is achieved. Isolate the gas cell from the sample flow by directing the purge flow to vent. Record the spectrum and pressure of the sample gas. After spectral acquisition, allow the sample gas to purge the cell with at least three volumes of kiln gas. The time required to adequately purge the cell with the required volume of gas is a function of (1) cell volume, (2) flow rate through the cell, and (3) cell design. It is important that the gas introduction and vent for the FTIR cell provides a complete purge through the cell.

8.6.4 *Continuous Sampling.* In some cases it is possible to collect spectra continuously while the FTIR cell is purged with sample gas. The sample integration time, $t_{ss}$, the sample flow rate through the gas cell, and the sample integration time must be chosen so that the collected data consist of at least 10 spectra with each spectrum being of a separate cell volume of flue gas. Sampling in this manner may only be performed if the native source analyte concentrations do not affect the test results.

8.7 Sample Conditioning

8.7.1 *High Moisture Sampling.* Kiln gas emitted from wet process cement kilns may contain 3- to 40 percent moisture. Zinc selenide windows or the equivalent should be used when attempting to analyze hot/wet kiln gas under these conditions to prevent dissolution of water soluble window materials (e.g., KBr).

8.7.2 *Sample Dilution.* The sample may be diluted using an in-stack dilution probe, or an external dilution device provided that the sample is not diluted below the instrument's quantification range. As an alternative to using a dilution probe, nitrogen may be dynamically spiked into the effluent stream in the same manner as analyte spiking. A constant dilution rate shall be maintained throughout the measurement process. It is critical to measure and verify the exact dilution ratio when using a dilution probe or the nitrogen spiking approach. Calibrating the system with a calibration gas containing an appropriate tracer compound will allow determination of the dilution ratio for most measurement systems. The tester shall specify the procedures used to determine the dilution ratio, and include these calibration results in the report.

8.8 *Sampling QA, Data Storage and Reporting.* See the FTIR Protocol. Sample integration times shall be sufficient to achieve the required signal-to-noise ratio, and all sample spectra should have unique file names. Two copies of sample interferograms and processed spectra will be stored on separate computer media. For each sample spectrum the analyst must document the sampling conditions, the sampling time (while the cell was being filled), the time the spectrum was recorded, the instrumental conditions (path length, temperature, pressure, resolution, integration time), and the spectral file name. A hard copy of these data must be maintained until the test results are accepted.

8.9 *Signal Transmittance.* Monitor the signal transmittance through the instrumental system. If signal transmittance (relative to the background) drops below 95 percent in any spectral region where the sample does not absorb infrared energy, then a new background spectrum must be obtained.

8.10 *Post-test CTS.* After the sampling run completion, record the CTS spectrum. Analysis of the spectral band area used for quantification from pre- and post-test CTS spectra should agree to within ±5 percent or corrective action must be taken.

8.11 *Post-test QA.* The sample spectra shall be inspected immediately after the run to verify that the gas matrix composition was

close to the assumed gas matrix, (this is necessary to account for the concentrations of the interferants for use in the analytical analysis programs), and to confirm that the sampling and instrumental parameters were appropriate for the conditions encountered.

*9.0 Quality Control*

Use analyte spiking to verify the effectiveness of the sampling system for the target compounds in the actual kiln gas matrix. QA spiking shall be performed before and after each sample run. QA spiking shall be performed after the pre- and post-test CTS direct and system calibrations. The system biases calculated from the pre- and post-test dynamic analyte spiking shall be within ±30 percent for the spiked surrogate analytes for the measurements to be considered valid. See sections 9.3.1 through 9.3.2 for the requisite calculations. Measurement of the undiluted spike (direct-to-cell measurement) involves sending dry, spike gas to the FTIR cell, filling the cell to 1 atmosphere and obtaining the spectrum of this sample. The direct-to-cell measurement should be performed before each analyte spike so that the recovery of the dynamically spiked analytes may be calculated. Analyte spiking is only effective for assessing the integrity of the sampling system when the concentration of HCl in the source does not vary substantially. Any attempt to quantify an analyte recovery in a variable concentration matrix will result in errors in the expected concentration of the spiked sample. If the kiln gas target analyte concentrations vary by more than ±5 percent (or 5 ppm, whichever is greater) in the time required to acquire a sample spectrum, it may be necessary to: (1) Use a dual sample probe approach, (2) use two independent FTIR measurement systems, (3) use alternate QA/QC procedures, or (4) postpone testing until stable emission concentrations are achieved. (See section 9.2.3 of this method). It is recommended that a laboratory evaluation be performed before attempting to employ this method under actual field conditions. The laboratory evaluation shall include (1) performance of all applicable calculations in section 4 of the FTIR Protocol; (2) simulated analyte spiking experiments in dry (ambient) and humidified sample matrices using HCl; and (3) performance of bias (recovery) calculations from analyte spiking experiments. It is not necessary to perform a laboratory evaluation before every field test. The purpose of the laboratory study is to demonstrate that the actual instrument and sampling system configuration used in field testing meets the requirements set forth in this method.

9.1 *Spike Materials.* Perform analyte spiking with an HCl standard to demonstrate the integrity of the sampling system.

9.1.1 An HCl standard of approximately 50 ppm in a balance of ultra pure nitrogen is recommended. The $SF_6$ (tracer) concentration shall be 2 to 5 ppm depending upon the measurement pathlength. The spike ratio (spike flow/total flow) shall be no greater than 1:10, and an ideal spike concentration should approximate the native effluent concentration.

9.1.2 The ideal spike concentration may not be achieved because the target concentration cannot be accurately predicted prior to the field test, and limited calibration standards will be available during testing. Therefore, practical constraints must be applied that allow the tester to spike at an anticipated concentration. For these tests, the analyte concentration contributed by the HCl standard spike should be 1 to 5 ppm or should more closely approximate the native concentration if it is greater.

9.2 Spike Procedure

9.2.1 A spiking/sampling apparatus is shown in Figure 2. Introduce the spike/tracer gas mixture at a constant flow (±2 percent) rate at approximately 10 percent of the total sample flow. (For example, introduce the surrogate spike at 1 L/min 20 cc/min, into a total sample flow rate of 10 L/min). The spike must be pre-heated before introduction into the sample matrix to prevent a localized condensation of the gas stream at the spike introduction point. A heated sample transport line(s) containing multiple transport tubes within the heated bundle may be used to spike gas up through the sampling system to the spike introduction point. Use a calibrated flow device (e.g., mass flow meter/controller), to monitor the spike flow as indicated by a calibrated flow meter or controller, or alternately, the $SF_6$ tracer ratio may be calculated from the direct measurement and the diluted measurement. It is often desirable to use the tracer approach in calculating the spike/total flow ratio because of the difficulty in accurately measuring hot/wet total flow. The tracer technique has been successfully used in past validation efforts (Reference 1).

9.2.2 Perform a direct-to-cell measurement of the dry, undiluted spike gas. Introduce the spike directly to the FTIR cell, bypassing the sampling system. Fill cell to 1 atmosphere and collect the spectrum of this sample. Ensure that the spike gas has equilibrated to the temperature of the measurement cell before acquisition of the spectra. Inspect the spectrum and verify that the gas is dry and contains negligible $CO_2$. Repeat the process to obtain a second direct-to-cell measurement. Analysis of spectral band areas for HCl from these duplicate measurements should agree to within ±5 percent of the mean.

9.2.3 *Analyte Spiking.* Determine whether the kiln gas contains native concentrations

of HCl by examination of preliminary spectra. Determine whether the concentration varies significantly with time by observing a continuously up-dated spectrum of sample gas in the flow-through sampling mode. If the concentration varies by more than ±5 percent during the period of time required to acquire a spectra, then an alternate approach should be used. One alternate approach uses two sampling lines to convey sample to the gas distribution manifold. One of the sample lines is used to continuously extract unspiked kiln gas from the source. The other sample line serves as the analyte spike line. One FTIR system can be used in this arrangement. Spiked or unspiked sample gas may be directed to the FTIR system from the gas distribution manifold, with the need to purge only the components between the manifold and the FTIR system. This approach minimizes the time required to acquire an equilibrated sample of spiked or unspiked kiln gas. If the source varies by more than ±5 percent (or 5 ppm, whichever is greater) in the time it takes to switch from the unspiked sample line to the spiked sample line, then analyte spiking may not be a feasible means to determine the effectiveness of the sampling system for the HCl in the sample matrix. A second alternative is to use two completely independent FTIR measurement systems. One system would measure unspiked samples while the other system would measure the spiked samples. As a last option, (where no other alternatives can be used) a humidified nitrogen stream may be generated in the field which approximates the moisture content of the kiln gas. Analyte spiking into this humidified stream can be employed to assure that the sampling system is adequate for transporting the HCl to the FTIR instrumentation.

9.2.3.1 Adjust the spike flow rate to approximately 10 percent of the total flow by metering spike gas through a calibrated mass flowmeter or controller. Allow spike flow to equilibrate within the sampling system before analyzing the first spiked kiln gas samples. A minimum of two consecutive spikes are required. Analysis of the spectral band area used for quantification should agree to within ±5 percent or corrective action must be taken.

9.2.3.2 After QA spiking is completed, the sampling system components shall be purged with nitrogen or dry air to eliminate traces of the HCl compound from the sampling system components. Acquire a sample spectra of the nitrogen purge to verify the absence of the calibration mixture.

9.2.3.3 Analyte spiking procedures must be carefully executed to ensure that meaningful measurements are achieved. The requirements of sections 9.2.3.3.1 through 9.2.3.3.4 shall be met.

9.2.3.3.1 The spike must be in the vapor phase, dry, and heated to (or above) the kiln gas temperature before it is introduced to the kiln gas stream.

9.2.3.3.2 The spike flow rate must be constant and accurately measured.

9.2.3.3.3 The total flow must also be measured continuously and reliably or the dilution ratio must otherwise be verified before and after a run by introducing a spike of a non-reactive, stable compound (i.e., tracer).

9.2.3.3.4 The tracer must be inert to the sampling system components, not contained in the effluent gas, and readily detected by the analytical instrumentation. Sulfur hexafluoride ($SF_6$) has been used successfully (References 1 and 2) for this purpose.

9.3 Calculations

9.3.1 *Recovery*. Calculate the percent recovery of the spiked analytes using equations 1 and 2.

$$\%R = 100 \times \frac{S_m - S_u(1 - DF)}{DF \times C_s} \qquad (1)$$

$S_m$ = Mean concentration of the analyte spiked effluent samples (observed).

$$C_e = DF \times C_s + S_u(1 - DF) \qquad (2)$$

$C_e$ = Expected concentration of the spiked samples (theoretical).

DF = Dilution Factor (Total flow/Spike flow). Total flow = spike flow plus effluent flow.

$C_s$ = cylinder concentration of spike gas.

$S_u$ = native concentration of analytes in unspiked samples.

The spike dilution factor may be confirmed by measuring the total flow and the spike flow directly. Alternately, the spike dilution can be verified by comparing the concentration of the tracer compound in the spiked samples (diluted) to the tracer concentration in the direct (undiluted) measurement of the spike gas.

If $SF_6$ is the tracer gas, then

$$D_f = [SF_6]_{spike} / [SF_6]_{direct} \qquad (3)$$

$[SF_6]_{spike}$ = the diluted $SF_6$ concentration measured in a spiked sample.

$[SF_6]_{direct}$ = the $SF_6$ concentration measured directly.

9.3.2 Bias. The bias may be determined by the difference between the observed spike value and the expected response (i.e., the equivalent concentration of the spiked material plus the analyte concentration adjusted for spike dilution). Bias is defined by section 6.3.1 of EPA Method 301 of this appendix (Reference 8) as,

$$B = S_m - C_e \qquad (4)$$

Where:

B = Bias at spike level.

$S_m$ = Mean concentration of the analyte spiked samples.

$C_e$ = Expected concentration of the analyte in spiked samples.

Acceptable recoveries for analyte spiking are ±30 percent. Application of correction factors to the data based upon bias and recovery calculations is subject to the approval of the Administrator.

*10.0 Calibration and Standardization*

10.1 *Calibration transfer standards (CTS).* The EPA Traceability Protocol gases or NIST traceable standards, with a minimum accuracy of ±2 percent shall be used. For other requirements of the CTS, see the FTIR Protocol section 4.5.

10.2 *Signal-to-Noise Ratio (S/N).* The S/N shall be less than the minimum acceptable measurement uncertainty in the analytical regions to be used for measuring HCl.

10.3 *Absorbance Pathlength.* Verify the absorbance path length by comparing CTS spectra to reference spectra of the calibration gas(es).

10.4 *Instrument Resolution.* Measure the line width of appropriate CTS band(s) to verify instrumental resolution.

10.5 *Apodization Function.* Choose the appropriate apodization function. Determine any appropriate mathematical transformations that are required to correct instrumental errors by measuring the CTS. Any mathematical transformations must be documented and reproducible. Reference 9 provides additional information about FTIR instrumentation.

*11.0 Analytical Procedure*

A full description of the analytical procedures is given in sections 4.6–4.11, sections 5, 6, and 7, and the appendices of the FTIR Protocol. Additional description of quantitative spectral analysis is provided in References 10 and 11.

*12.0 Data Analysis and Calculations*

Data analysis is performed using appropriate reference spectra whose concentrations can be verified using CTS spectra. Various analytical programs (References 10 and 11) are available to relate sample absorbance to a concentration standard. Calculated concentrations should be verified by analyzing spectral baselines after mathematically subtracting scaled reference spectra from the sample spectra. A full description of the data analysis and calculations may be found in the FTIR Protocol (sections 4.0, 5.0, 6.0 and appendices).

12.1 Calculated concentrations in sample spectra are corrected for differences in absorption pathlength between the reference and sample spectra by

$$C_{corr} = \left(L_r / L_s\right) \times \left(T_s / T_r\right) \times \left(C_{calc}\right) \qquad (5)$$

Where:

$C_{corr}$ = The pathlength corrected concentration.

$C_{calc}$ = The initial calculated concentration (output of the multicomponent analysis program designed for the compound).

$L_r$ = The pathlength associated with the reference spectra.

$L_s$ = The pathlength associated with the sample spectra.

$T_s$ = The absolute temperature (K) of the sample gas.

$T_r$ = The absolute temperature (K) at which reference spectra were recorded.

12.2 The temperature correction in equation 5 is a volumetric correction. It does not account for temperature dependence of rotational-vibrational relative line intensities. Whenever possible, the reference spectra used in the analysis should be collected at a temperature near the temperature of the FTIR cell used in the test to minimize the calculated error in the measurement (FTIR Protocol, appendix D). Additionally, the analytical region chosen for the analysis should be sufficiently broad to minimize errors caused by small differences in relative line intensities between reference spectra and the sample spectra.

*13.0 Method Performance*

A description of the method performance may be found in the FTIR Protocol. This method is self validating provided the results meet the performance specification of the QA spike in sections 9.0 through 9.3 of this method.

*14.0 Pollution Prevention*

This is a gas phase measurement. Gas is extracted from the source, analyzed by the instrumentation, and discharged through the instrument vent.

*15.0 Waste Management*

Gas standards of HCl are handled according to the instructions enclosed with the material safety data sheet.

*16.0 References*

1. ''Laboratory and Field Evaluation of a Methodology for Determination of Hydrogen Chloride Emissions From Municipal and Hazardous Waste Incinerators,'' S.C.

Steinsberger and J.H. Margeson. Prepared for U.S. Environmental Protection Agency, Research Triangle Park, NC. NTIS Report No. PB89–220586. (1989).

2. ''Evaluation of HCl Measurement Techniques at Municipal and Hazardous Waste Incinerators,'' S.A. Shanklin, S.C. Steinsberger, and L. Cone, Entropy, Inc. Prepared for U.S. Environmental Protection Agency, Research Triangle Park, NC. NTIS Report No. PB90–221896. (1989).

3. ''Fourier Transform Infrared (FTIR) Method Validation at a Coal Fired-Boiler,'' Entropy, Inc. Prepared for U.S. Environmental Protection Agency, Research Triangle Park, NC. EPA Publication No. EPA–454/R95–004. NTIS Report No. PB95–193199. (1993).

4. ''Field Validation Test Using Fourier Transform Infrared (FTIR) Spectrometry To Measure Formaldehyde, Phenol and Methanol at a Wool Fiberglass Production Facility.'' Draft. U.S. Environmental Protection Agency Report, Entropy, Inc., EPA Contract No. 68D20163, Work Assignment I–32.

5. Kinner, L.L., Geyer, T.G., Plummer, G.W., Dunder, T.A., Entropy, Inc. ''Application of FTIR as a Continuous Emission Monitoring System.'' Presentation at 1994 International Incineration Conference, Houston, TX. May 10, 1994.

6. ''Molecular Vibrations; The Theory of Infrared and Raman Vibrational Spectra,'' E. Bright Wilson, J.C. Decius, and P.C. Cross, Dover Publications, Inc., 1980. For a less intensive treatment of molecular rotational-vibrational spectra see, for example, ''Physical Chemistry,'' G.M. Barrow, chapters 12, 13, and 14, McGraw Hill, Inc., 1979.

7. ''Laboratory and Field Evaluations of Ammonium Chloride Interference in Method 26,'' U.S. Environmental Protection Agency Report, Entropy, Inc., EPA Contract No. 68D20163, Work Assignment No. I–45.

8. 40 CFR 63, appendix A. Method 301—Field Validation of Pollutant Measurement Methods from Various Waste Media.

9. ''Fourier Transform Infrared Spectrometry,'' Peter R. Griffiths and James de Haseth, Chemical Analysis, 83, 16–25, (1986), P.J. Elving, J.D. Winefordner and I.M. Kolthoff (ed.), John Wiley and Sons.

10. ''Computer-Assisted Quantitative Infrared Spectroscopy,'' Gregory L. McClure (ed.), ASTM Special Publication 934 (ASTM), 1987.

11. ''Multivariate Least-Squares Methods Applied to the Quantitative Spectral Analysis of Multicomponent Mixtures,'' Applied Spectroscopy, 39(10), 73–84, 1985.

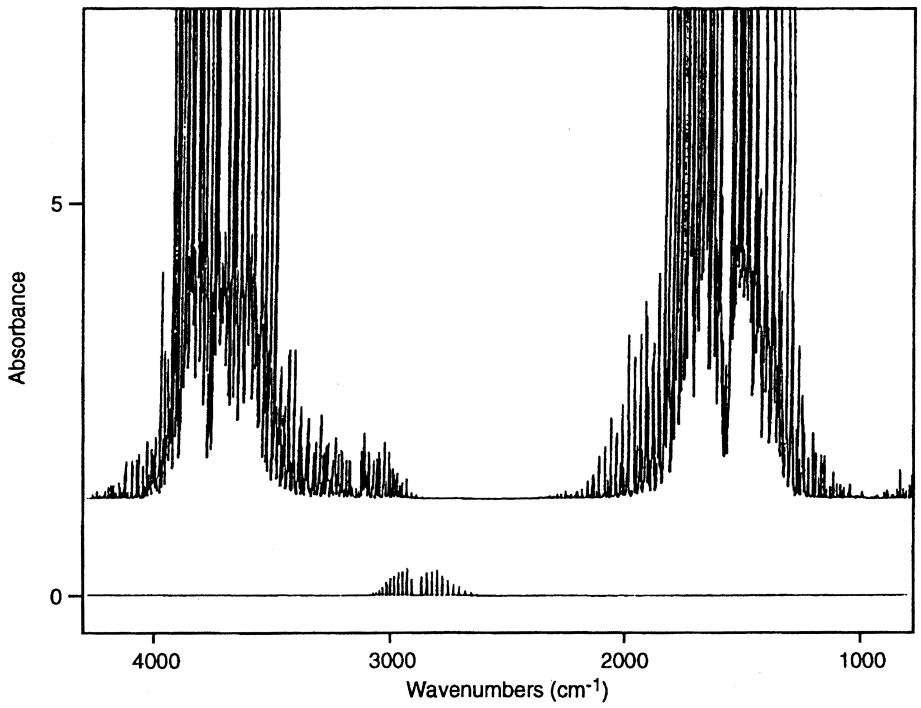


Top, water vapor (194hsub); Bottom, HCl at 11.4 (ppm-M)/K.

Figure 1. FTIR Spectra of HCl and Water.

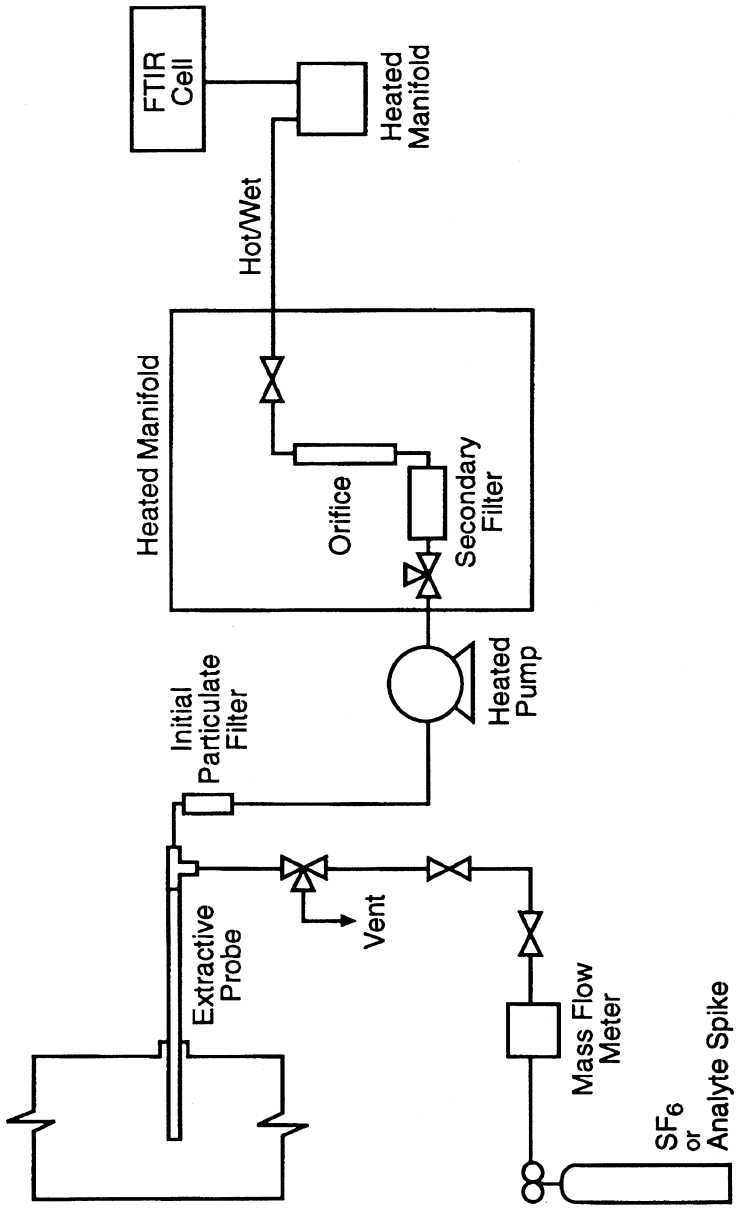


Figure 2. FTIR Sampling/Spiking System.

METHOD 323—MEASUREMENT OF FORMALDEHYDE EMISSIONS FROM NATURAL GAS-FIRED STATIONARY SOURCES—ACETYL ACETONE DERIVATIZATION METHOD

1.0 Introduction. This method describes the sampling and analysis procedures of the acetyl acetone colorimetric method for measuring formaldehyde emissions in the exhaust of natural gas-fired, stationary combustion sources. This method, which was prepared by the Gas Research Institute (GRI), is based on the Chilled Impinger Train Method for Methanol, Acetone, Acetaldehyde, Methyl Ethyl Ketone, and Formaldehyde (Technical Bulletin No. 684) developed and published by the National Council of the Paper Industry for Air and Stream Improvement, Inc. (NCASI). However, this method has been prepared specifically for formaldehyde and does not include specifications (*e.g.*, equipment and supplies) and procedures (*e.g.*, sampling and analytical) for methanol, acetone, acetaldehyde, and methyl ethyl ketone. To obtain reliable results, persons using this method should have a thorough knowledge of at least Methods 1 and 2 of 40 CFR part 60, appendix A–1; Method 3 of 40 CFR part 60, appendix A–2; and Method 4 of 40 CFR part 60, appendix A–3.

*1.1 Scope and Application*

1.1.1 Analytes. The only analyte measured by this method is formaldehyde (CAS Number 50–00–0).

1.1.2 Applicability. This method is for analyzing formaldehyde emissions from uncontrolled and controlled natural gas-fired, stationary combustion sources.

1.1.3 Data Quality Objectives. If you adhere to the quality control and quality assurance requirements of this method, then you and future users of your data will be able to assess the quality of the data you obtain and estimate the uncertainty in the measurements.

2.0 Summary of Method. An emission sample from the combustion exhaust is drawn through a midget impinger train containing chilled reagent water to absorb formaldehyde. The formaldehyde concentration in the impinger is determined by reaction with acetyl acetone to form a colored derivative which is measured colorimetrically.

*3.0 Definitions*

[Reserved]

4.0 Interferences. The presence of acetaldehyde, amines, polymers of formaldehyde, periodate, and sulfites can cause interferences with the acetyl acetone procedure which is used to determine the formaldehyde concentration. However, based on experience gained from extensive testing of natural gas-fired combustion sources using FTIR to measure a variety of compounds, GRI expects only acetaldehyde to be potentially present when combusting natural gas. Acetaldehyde has been reported to be a significant interference only when present at concentrations above 50 ppmv. However, GRI reports that the concentration of acetaldehyde from gas-fired sources is very low (typically below the FTIR detection limit of around 0.5 ppmv); therefore, the potential positive bias due to acetaldehyde interference is expected to be negligible.

*5.0 Safety*

5.1 Prior to applying the method in the field, a site-specific Health and Safety Plan should be prepared. General safety precautions include the use of steel-toed boots, safety glasses, hard hats, and work gloves. In certain cases, facility policy may require the use of fire-resistant clothing while on-site. Since the method involves testing at high-temperature sampling locations, precautions must be taken to limit the potential for exposure to high-temperature gases and surfaces while inserting or removing the sample probe. In warm locations, precautions must also be taken to avoid dehydration.

5.2 Potential chemical hazards associated with sampling include formaldehyde, nitrogen oxides ($NO_X$), and carbon monoxide (CO). Formalin solution, used for field spiking, is an aqueous solution containing formaldehyde and methanol. Formaldehyde is a skin, eye, and respiratory irritant and a carcinogen, and should be handled accordingly. Eye and skin contact and inhalation of formaldehyde vapors should be avoided. Natural gas-fired combustion sources can potentially emit CO at toxic concentrations. Care should be taken to minimize exposure to the sample gas while inserting or removing the sample probe. If the work area is enclosed, personal CO monitors should be used to insure that the concentration of CO in the work area is maintained at safe levels.

5.3 Potential chemical hazards associated with the analytical procedures include acetyl acetone and glacial acetic acid. Acetyl acetone is an irritant to the skin and respiratory system, as well as being moderately toxic. Glacial acetic acid is highly corrosive and is an irritant to the skin, eyes, and respiratory system. Eye and skin contact and inhalation of vapors should be avoided. Acetyl acetone and glacial acetic acid have flash points of 41 °C (105.8 °F) and 43 °C (109.4 °F), respectively. Exposure to heat or flame should be avoided.

*6.0 Equipment and Supplies*

6.1 Sampling Probe. Quartz glass probe with stainless steel sheath or stainless steel probe.

6.2 Teflon Tubing. Teflon tubing to connect the sample probe to the impinger train. A heated sample line is not needed since the sample transfer system is rinsed to recover

condensed formaldehyde and the rinsate combined with the impinger contents prior to sample analysis.

6.3 Midget Impingers. Three midget impingers are required for sample collection. The first impinger serves as a moisture knockout, the second impinger contains 20 mL of reagent water, and the third impinger contains silica gel to remove residual moisture from the sample prior to the dry gas meter.

6.4 Vacuum Pump. Vacuum pump capable of delivering a controlled extraction flow rate between 0.2 and 0.4 L/min.

6.5 Flow Measurement Device. A rotameter or other flow measurement device is required to indicate consistent sample flow.

6.6 Dry Gas Meter. A dry gas meter is used to measure the total sample volume collected. The dry gas meter must be sufficiently accurate to measure the sample volume to within 2 percent, calibrated at the selected flow rate and conditions actually encountered during sampling, and equipped with a temperature sensor (dial thermometer, or equivalent) capable of measuring temperature accurately to within 3 °C (5.4 °F).

6.7 Spectrophotometer. A spectrophotometer is required for formaldehyde analysis, and must be capable of measuring absorbance at 412 nm.

*7.0 Reagents and Standards*

7.1 Sampling Reagents

7.1.1 Reagent water. Deionized, distilled, organic-free water. This water is used as the capture solution, for rinsing the sample probe, sample line, and impingers at the completion of the sampling run, in reagent dilutions, and in blanks.

7.1.2 Ice. Ice is necessary to pack around the impingers during sampling in order to keep the impingers cold. Ice is also needed for sample transport and storage.

7.2 Analysis

7.2.1 Acetyl acetone Reagent. Prepare the acetyl acetone reagent by dissolving 15.4 g of ammonium acetate in 50 mL of reagent water in a 100-mL volumetric flask. To this solution, add 0.20 mL of acetyl acetone and 0.30 mL of glacial acetic acid. Mix the solution thoroughly, then dilute to 100 mL with reagent water. The solution can be stored in a brown glass bottle in the refrigerator, and is stable for at least two weeks.

7.2.2 Formaldehyde. Reagent grade.

7.2.3 Ammonium Acetate

7.2.4 Glacial Acetic Acid

*8.0 Sample Collection, Preservation, Storage, and Transport*

8.1 Pre-test

8.1.1 Collect information about the site characteristics such as exhaust pipe diameter, gas flow rates, port location, access to ports, and safety requirements during a pre-test site survey. You should then decide the sample collection period per run and the target sample flow rate based on your best estimate of the formaldehyde concentration likely to be present. You want to assure that sufficient formaldehyde is captured in the impinger solution so that it can be measured precisely by the spectrophotometer. You may use Equation 323–1 to design your test program. As a guideline for optimum performance, if you can, design your test so that the liquid concentration ($C_l$) is approximately 10 times the assumed spectrophotometer detection limit of 0.2 μg/mL. However, since actual detection limits are instrument specific, we also suggest that you confirm that the laboratory equipment can meet or exceed this detection limit.

8.1.2 Prepare and then weigh the midget impingers prior to configuring the sampling train. The first impinger is initially dry. The second impinger contains 20 mL of reagent water, and the third impinger contains silica gel that is added before weighing the impinger. Each prepared impinger is weighed and the pre-sampling weight is recorded to the nearest 0.5 gm.

8.1.3 Assemble the sampling train (see Figure 1). Ice is packed around the impingers in order to keep them cold during sample collection. A small amount of water may be added to the ice to improve thermal transfer.

8.1.4 Perform a sampling system leak check (from the probe tip to the pump outlet) as follows: Connect a rotameter to the outlet of the pump. Close off the inlet to the probe and observe the leak rate. The leak rate must be less than 2 percent of the planned sampling rate of 0.2 or 0.4 L/min.

8.1.5 Source gas temperature and static pressure should also be considered prior to field sampling to ensure adequate safety precautions during sampling.

8.2 Sample Collection

8.2.1 Set the sample flow rate between 0.2–0.4 L/min, depending upon the anticipated concentration of formaldehyde in the engine exhaust. (You may have to refer to published data for anticipated concentration levels—see References 5 and 6.) If no information is available for the anticipated levels of formaldehyde, use the higher sampling rate of 0.4 L/min.

8.2.2 Record the sampling flow rate every 5 to 10 minutes during the sample collection period.

NOTE: It is critical that you do not sample at a flow rate higher than 0.4 L/min. Sampling at higher flow rates may reduce formaldehyde collection efficiency resulting in measured formaldehyde concentrations that are less than the actual concentrations.

8.2.3 Monitor the amount of ice surrounding the impingers and add ice as necessary to maintain the proper impinger temperature. Remove excess water as needed to maintain an adequate amount of ice.

8.2.4 Record measured leak rate, beginning and ending times and dry gas meter readings for each sampling run, impinger weights before and after sampling, and sampling flow rates and dry gas meter exhaust temperature every 5 to 10 minutes during the run, in a signed and dated notebook.

8.2.5 If possible, monitor and record the fuel flow rate to the engine and the exhaust oxygen concentration during the sampling period. This data can be used to estimate the engine exhaust flow rate based on the Method 19 approach. This approach, if accurate fuel flow rates can be determined, is preferred for reciprocating IC engine exhaust flow rate estimation due to the pulsating nature of the engine exhaust. The F–Factor procedures described in Method 19 may be used based on measurement of fuel flow rate and exhaust oxygen concentration. One example equation is Equation 323–2.

8.3 Post-test. Perform a sampling system leak-check (from the probe tip to pump outlet). Connect a rotameter to the outlet of the pump. Close off the inlet to the probe and observe the leak rate. The leak rate must be less than 2 percent of the sampling rate. Weigh and record each impinger immediately after sampling to determine the moisture weight gain. The impinger weights are measured before transferring the impinger contents, and before rinsing the sample probe and sample line. The moisture content of the exhaust gas is determined by measuring the weight gain of the impinger solutions and volume of gas sampled as described in Method 4. Rinse the sample probe and sample line with reagent water. Transfer the impinger catch to an amber 40-mL VOA bottle with a Teflon-lined cap. If there is a small amount of liquid in the dropout impinger (<10 mL), the impinger catches can be combined in one 40 mL VOA bottle. If there is a larger amount of liquid in the dropout impinger, use a larger VOA bottle to combine the impinger catches. Rinse the impingers and combine the rinsings from the sample probe, sample line, and impingers with the impinger catch. In general, combined rinse volumes should not exceed 10 mL. However, in cases where a long, flexible extension line must be used to connect the sample probe to the sample box, sufficient water must be used to rinse the connecting line to insure that any sample that may have collected there is recovered. The volume of the rinses during sample recovery should not be excessive as this may result in your having to use a larger VOA bottle. This in turn would raise the detection limit of the method since after combining the rinses with the impinger catches in the VOA bottle, the bottle should be filled with reagent water to eliminate the headspace in the sample vial. Keep the sample bottles over ice until analyzed on-site or received at the laboratory. Samples should be analyzed as soon as possible to minimize possible sample degradation. Based on a limited number of previous analyses, samples held in refrigerated conditions showed some sample degradation over time.

8.4 Quality Control Samples

8.4.1 Field Duplicates. During at least one run, a pair of samples should be collected concurrently and analyzed as separate samples. Results of the field duplicate samples should be identified and reported with the sample results. The percent difference in exhaust (stack) concentration indicated by field duplicates should be within 20 percent of their mean concentration. Data are to be flagged as suspect if the duplicates do not meet the acceptance criteria.

8.4.2 Spiked Samples. An aliquot of one sample from each source sample set should be spiked at 2 to 3 times the formaldehyde level found in the unspiked sample. It is also recommended that a second aliquot of the same sample be spiked at around half the level of the first spike; however, the second spike is not mandatory. The results are acceptable if the measured spike recovery is 80 to 120 percent. Use Equation 323–4. Data are to be flagged as suspect if the spike recovery do not meet the acceptance criteria.

8.4.3 Field Blank. A field blank consisting of reagent water placed in a clean impinger train, taken to the test site but not sampled, then recovered and analyzed in the same manner as the other samples, should be collected with each set of source samples. The field blank results should be less than 50 percent of the lowest calibration standard used in the sample analysis. If this criteria is not met, the data should be flagged as suspect.

*9.0 Quality Control*

| QA/QC | Acceptance | Frequency | Corrective action |
|---|---|---|---|
| Leak-check—Sections 8.1.4, 8.3. | <2% of Sampling rate | Pre- and Post-sampling | Pre-sampling: Repair leak and recheck<br>Post-sampling: Flag data and repeat run if for regulatory compliance. |
| Sample flow rate | Between 0.2 and 0.4 L/min | Throughout sampling | Adjust. |
| VOA vial headspace | No headspace | After sample recovery | Flag data. |
| Sample preservation | Maintain on ice | After sample recovery | Flag data. |
| Sample hold time | 14 day maximum | After sample recovery | Flag data. |
| Field Duplicates—Section 8.4.1. | Within 20% of mean of original and duplicate sample. | One duplicate per source sample set. | Flag data. |
| Spiked Sample—Section 8.4.2 | Recovery between 80 and 120%. | One spike per source sample set. | Flag data. |
| Field Blank—Section 8.4.3 | <50% of the lowest calibration standard. | One blank per source sample set. | Flag data. |
| Calibration Linearity—Section 10.1. | Correlation coefficient of 0.99 or higher. | Per source sample set | Repeat calibration procedures. |
| Calibration Check Standard—Section 10.3. | Within 10% of theoretical value. | One calibration check per source sample set. | Repeat check, remake standard and repeat, repeat calibration. |
| Lab Duplicates—Section 11.2.1. | Within 10% of mean of original and duplicate sample analysis. | One duplicate per 10 samples | Flag data. |
| Analytical Blanks—Section 11.2.2. | <50% of the lowest calibration standard. | One blank per source sample set. | Clean glassware/analytical equipment and repeat. |

*10.0 Calibration and Standardization*

10.1 Spectrophotometer Calibration. Prepare a stock solution of 10 μg/mL formaldehyde. Prepare a series of calibration standards from the stock solution by adding 0, 0.1, 0.3, 0.7, 1.0, and 1.5 mL of stock solution (corresponding to 0, 1.0, 3.0, 7.0, 10.0, and 15.0 μg formaldehyde, respectively) to screw-capped vials. Adjust each vial's volume to 2.0 mL with reagent water. At this point the concentration of formaldehyde in the standards is 0.0, 0.5, 1.5, 3.5, 5.0, and 7.5 μg/mL, respectively. Add 2.0 mL of acetyl acetone reagent, thoroughly mix the solution, and place the vials in a water bath (or heating block) at 60 °C for 10 minutes. Remove the vials and allow to cool to room temperature. Transfer each solution to a cuvette and measure the absorbance at 412 nm using the spectrophotometer. Develop a calibration curve from the analytical results of these standards. The acceptance criteria for the spectrophotometer calibration is a correlation coefficient of 0.99 or higher. If this criteria is not met, the calibration procedures should be repeated.

10.2 Spectrophotometer Zero. The spectrophotometer should be zeroed with reagent water when analyzing each set of samples.

10.3 Calibration Checks. Calibration checks consisting of analyzing a standard separate from the calibration standards must be performed with each set of samples. The calibration check standard should not be prepared from the calibration stock solution. The result of the check standard must be within 10 percent of the theoretical value to be acceptable. If the acceptance criteria are not met, the standard must be reanalyzed. If still unacceptable, a new calibration curve must be prepared using freshly prepared standards.

*11.0 Analytical Procedure*

11.1 Sample Analysis. A 2.0-mL aliquot of the impinger catch/rinsate is transferred to a screw-capped vial. Two mL of the acetyl acetone reagent are added and the solution is thoroughly mixed. Once mixed, the vial is placed in a water bath (or heating block) at 60 °C for 10 minutes. Remove the vial and allow to cool to room temperature. Transfer the solution to a cuvette and measure the absorbance using the spectrophotometer at 412 nm. The quantity of formaldehyde present is determined by comparing the sample response to the calibration curve. Use Equation 323–5. If the sample response is out of the calibration range, the sample must be diluted and reanalyzed. Such dilutions must be performed on another aliquot of the original sample before the addition of the acetyl acetone reagent. The full procedure is repeated with the diluted sample.

11.2 Analytical Quality Control

11.2.1 Laboratory Duplicates. Two aliquots of one sample from each source sample set should be prepared and analyzed (with a minimum of one pair of aliquots for every 10 samples). The percent difference between aliquot analysis should be within 10 percent of their mean. Use Equation 323–3. Data are flagged if the laboratory duplicates do not meet this criteria.

11.2.2 Analytical blanks. Blank samples (reagent water) should be incorporated into each sample set to evaluate the possible presence of any cross-contamination. The acceptance criteria for the analytical blank is

less than 50 percent of the lowest calibration standard. If the analytical blank does not meet this criteria, the glassware/analytical equipment should be cleaned and the analytical blank repeated.

*12.0 Calculations and Data Analysis*

12.1 Nomenclature

A = measured absorbance of 2 mL aliquot
B = estimated sampling rate, Lpm
$C_l$ = target concentration in liquid, µg/mL
D = estimated stack formaldehyde concentration (ppmv)
E = estimated liquid volume, normally 40 mL (the size of the VOA used)
$c_{form}$ = formaldehyde concentration in gas stream, ppmvd
$c_{form}$ @15%$0_2$ = formaldehyde concentration in gas stream corrected to 15% oxygen, ppmvd
$C_{sm}$ = measured concentration of formaldehyde in the spiked aliquot
$C_u$ = measured concentration of formaldehyde in the unspiked aliquot of the same sample
$C_s$ = calculated concentration of formaldehyde spiking solution added to the spiked aliquot
F = dilution factor, 1 unless dilution of the sample was needed to reduce the absorbance into the calibration range
$F_d$ = dry basis F-factor from Method 19, dscf per million btu $GCV_g$ = Gross calorific value (or higher heating value), btu per scf
$K_c$ = spectrophotometer calibration factor, slope of the least square regression line, µg/absorbance (Note: Most spreadsheets are capable of calculating a least squares line.)
$K_1$ = 0.3855°K/mm Hg for metric units, (17.65°R/in.Hg for English units.)
MW = molecular weight, 30 g/g-mole, for formaldehyde 24.05 = mole specific volume constant, liters per g-mole
m = mass of formaldehyde in liquid sample, mg
$P_{std}$ = Standard pressure, 760 mm Hg (29.92 in.Hg)
$P_{bar}$ = Barometric pressure, mm Hg (in.Hg)
PD = Percent Difference
$Q_e$ = exhaust flow rate, dscf per minute
$Q_g$ = natural gas fuel flow rate, scf per minute
$T_m$ = Average DGM absolute temperature, °K (°R).
$T_{std}$ = Standard absolute temperature, 293 °K (528 °R).
t = sample time (minutes)
$V_m$ = Dry gas volume as measured by the DGM, dcm (dcf).
$V_{m(std)}$ = Dry gas volume measured by the DGM, corrected to standard conditions of 1 atmosphere and 20 °C, dscm (dscf).
$V_t$ = actual total volume of impinger catch/rinsate, mL
$V_a$ = volume (2.0) of aliquot analyzed, mL
$X_1$ = first value
$X_2$ = second value
$O_{2d}$ = oxygen concentration measured, percent by volume, dry basis
%R = percent recovery of spike
$Z_u$ = volume fraction of unspiked (native) sample contained in the final spiked aliquot [*e.g.*, Vu/(Vu + Vs), where Vu + Vs should = 2.0 mL]
$Z_s$ = volume fraction of spike solution contained in the final spiked aliquot [*e.g.*, Vs/(Vu + Vs)]
R = 0.02405 dscm per g-mole, for metric units at standard conditions of 1 atmosphere and 20 °C
Y = Dry Gas Meter calibration factor

12.2 Pretest Design

$$C_1 = \frac{B * t * D * 30}{24.05 * E} \qquad \text{Eq. 323-1}$$

12.3 Exhaust Flow Rate

$$Q = \frac{F_d Q_g GCV_g}{10^6}\left[\frac{20.9}{20.9 - O_{2d}}\right] \qquad \text{Eq. 323-2}$$

12.4 Percent Difference—(Applicable to Field and Lab Duplicates)

$$PD = \frac{(X_1 - X_2)}{\left(\frac{X_1 + X_2}{2}\right)} * 100 \qquad \text{Eq. 323-3}$$

12.5 Percent Recovery of Spike

$$\%R = \frac{(C_{sm} - Z_u C_u)}{Z_s C_s} * 100 \qquad \text{Eq. 323-4}$$

12.6 Mass of Formaldehyde in Liquid Sample

$$m = K_c * A * F\left(\frac{V_t}{V_a}\right)\left(\frac{1\ mg}{1000\ .g}\right) \qquad \text{Eq. 323-5}$$

12.7 Dry Gas Sample Volume Corrected to Standard Conditions

$$V_{m(std)} = \frac{\left(V_m Y T_{std} P_{bar}\right)}{T_m P_{std}} \qquad \text{Eq. 323-6}$$

$$= \frac{K_i Y V_m P_{bar}}{T_m}$$

12.8 Formaldehyde Concentration in gas Stream

$$c_{form} = \frac{R}{MW}\left(\frac{m}{V_{m(std)}}\right)\left(\frac{1\,g}{1000\,mg}\right)\left(1\times10^6\ ppmv\right) \qquad \text{Eq. 323-7}$$

12.9 Formaldehyde Concentration Corrected to 15% Oxygen

$$C_{form@15\%O_2} = C_{form}\ \frac{(20.9-15)}{(20.9-O_{2d})} \qquad \text{Eq. 323-8}$$

*13.0 Method Performance*

13.1 Precision. Based on a Method 301 validation using quad train arrangement with post sampling spiking study of the method at a natural gas-fired IC engine, the relative standard deviation of six pairs of unspiked samples was 11.2 percent at a mean stack gas concentration of 16.7 ppmvd.

13.2 Bias. No bias correction is allowed. The single Method 301 validation study of the method at a natural gas-fired IC engine, indicated a bias correction factor of 0.91 for that set of data. An earlier spiking study got similar average percent spike recovery when spiking into a blank sample. This data set is too limited to justify using a bias correction factor for future tests at other sources.

13.3 Range. The range of this method for formaldehyde is 0.2 to 7.5 μg/mL in the liquid phase. (This corresponds to a range of 0.27 to 10 ppmv in the engine exhaust if sampling at a rate of 0.4 Lpm for 60 minutes and using a 40-mL VOA bottle.) If the liquid sample concentration is above this range, perform the appropriate dilution for accurate measurement. Any dilutions must be taken from new aliquots of the original sample before reanalysis.

13.4 Sample Stability. Based on a sample stability study conducted in conjunction with the method validation, sample degradation for 7- and 14-day hold times does not exceed 2.3 and 4.6 percent, respectively, based on a 95 percent level of confidence. Therefore, the recommended maximum sample holding time for the underivatized impinger catch/rinsings is 14 days, where projected sample degradation is below 5 percent.

*14.0 Pollution Prevention*

Sample gas from the combustion source exhaust is vented to the atmosphere after passing through the chilled impinger sampling train. Reagent solutions and samples should be collected for disposal as aqueous waste.

*15.0 Waste Management*

Standards of formaldehyde and the analytical reagents should be handled according to the Material Safety Data Sheets.

*16.0 References*

1. National Council of the Paper Industry for Air and Stream Improvement, Inc. ''Volatile Organic Emissions from Pulp and Paper Mill Sources, Part X—Test Methods, Quality Assurance/Quality Control Procedures, and Data Analysis Protocols.'' Technical Bulletin No. 684, December 1994.

2. National Council of the Paper Industry for Air and Stream Improvement, Inc., ''Field Validation of a Source Sampling Method for Formaldehyde, Methanol, and Phenol at Wood Products Mills.'' 1997 TAPPI International Environmental Conference.

3. Roy F. Weston, Inc. ''Formaldehyde Sampling Method Field Evaluation and Emission Test Report for Georgia-Pacific Resins, Inc., Russellville, South Carolina.'' August 1996.

4. Hoechst Celanese Method CL 8–4. ''Standard Test Method for Free Formaldehyde in Air Using Acetyl Acetone.'' Revision 0, September 1986.

5. Shareef, G.S., *et al.* ''Measurement of Air Toxic Emissions from Natural Gas-Fired Internal Combustion Engines at Natural Gas Transmission and Storage Facilities.'' Report No. GRI–96/0009.1, Gas Research Institute, Chicago, Illinois, February 1996.

6. Gundappa, M., *et al.* ''Characteristics of Formaldehyde Emissions from Natural Gas-Fired Reciprocating Internal Combustion Engines in Gas Transmission. Volume I: Phase I Predictive Model for Estimating Formaldehyde Emissions from 2–Stroke Engines.'' Report No. GRI–97/0376.1, Gas Research Institute, Chicago, Illinois, September 1997.

*17.0 Tables, Diagrams, Flowcharts, and Validation Data*

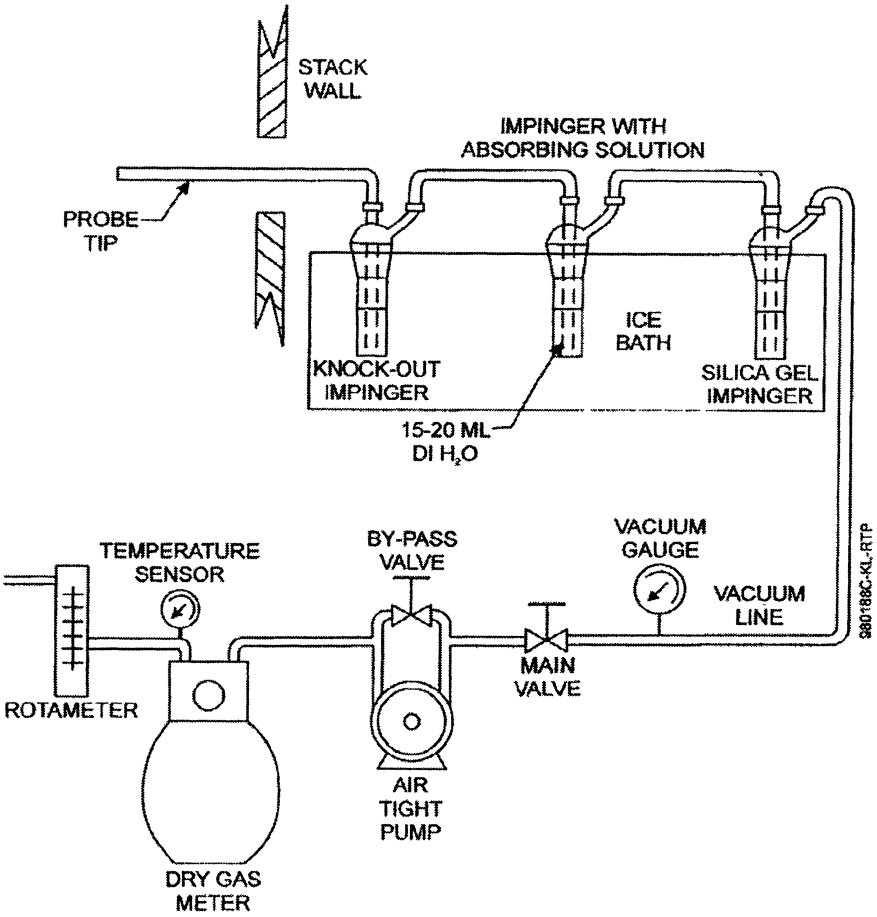


Figure 323-1. Chilled Impinger Train Sampling System

METHOD 325A—VOLATILE ORGANIC COMPOUNDS FROM FUGITIVE AND AREA SOURCES:

Sampler Deployment and VOC Sample Collection

1.0 SCOPE AND APPLICATION

1.1 This method describes collection of volatile organic compounds (VOCs) at or inside a facility property boundary or from fugitive and area emission sources using passive (diffusive) tube samplers (PS). The concentration of airborne VOCs at or near these potential fugitive- or area-emission sources may be determined using this method in combination with Method 325B. Companion Method 325B (Sampler Preparation and Analysis) describes preparation of sampling tubes, shipment and storage of exposed sampling tubes, and analysis of sampling tubes collected using either this passive sampling procedure or alternative active (pumped) sampling methods.

1.2 This method may be used to determine the average concentration of the select VOCs using the corresponding uptake rates listed in Method 325B, Table 12.1. Additional compounds or alternative sorbents must be evaluated as described in Addendum A of Method 325B or by one of the following national/

international standard methods: ISO 16017–2:2003(E), ASTM D6196–03 (Reapproved 2009), or BS EN 14662–4:2005 (all incorporated by reference—see §63.14), or reported in the peer-reviewed open literature.

1.3 Methods 325A and 325B are valid for the measurement of benzene. Supporting literature (References 1–8) indicates that benzene can be measured by flame ionization detection or mass spectrometry over a concentration range of approximately 0.5 micrograms per cubic meter (μg/m³) to at least 500 μg/m³ when industry standard (3.5 inch long × 0.25 inch outside diameter (o.d.) × 5 mm inner diameter (i.d.)) inert-coated stainless steel sorbent tubes packed with Carbograph™ 1 TD, Carbopack™ B, or Carbopack™ X or equivalent are used and when samples are accumulated over a period of 14 days.

1.4 This method may be applied to screening average airborne VOC concentrations at facility property boundaries or monitoring perimeters over an extended period of time using multiple sampling periods (*e.g.*, 26 × 14-day sampling periods). The duration of each sampling period is normally 14 days.

1.5 This method requires the collection of local meteorological data (wind speed and direction, temperature, and barometric pressure). Although local meteorology is a component of this method, non-regulatory applications of this method may use regional meteorological data. Such applications risk that the results may not identify the precise source of the emissions.

## 2.0 Summary of the Method

### 2.1 Principle of the Method

The diffusive passive sampler collects VOC from air for a measured time period at a rate that is proportional to the concentration of vapor in the air at that location.

2.1.1 This method describes the deployment of prepared passive samplers, including determination of the number of passive samplers needed for each survey and placement of samplers along or inside the facility property boundary depending on the size and shape of the site or linear length of the boundary.

2.1.2 The rate of sampling is specific to each compound and depends on the diffusion constants of that VOC and the sampler dimensions/characteristics as determined by prior calibration in a standard atmosphere (Reference 1).

2.1.3 The gaseous VOC target compounds migrate through a constant diffusion barrier (*e.g.*, an air gap of fixed dimensions) at the sampling end of the diffusion sampling tube and adsorb onto the sorbent.

2.1.4 Heat and a flow of inert carrier gas are then used to extract (desorb) the retained VOCs back from the sampling end of the tube and transport/transfer them to a gas chromatograph (GC) equipped with a chromatographic column to separate the VOCs and a detector to determine the quantity of target VOCs.

2.1.5 Gaseous or liquid calibration standards loaded onto the sampling ends of clean sorbent tubes must be used to calibrate the analytical equipment.

2.1.6 This method requires the use of field blanks to ensure sample integrity associated with shipment, collection, and storage of the passive samples. It also requires the use of field duplicates to validate the sampling process.

2.1.7 At the end of each sampling period, the passive samples are collected, sealed, and shipped to a laboratory for analysis of target VOCs by thermal desorption gas chromatography, as described in Method 325B.

### 2.2 Application of Diffusive Sampling

2.2.1 This method requires deployment of passive sampling tubes on a monitoring perimeter encompassing all known emission sources at a facility and collection of local meteorological data. It may be used to determine average concentration of VOC at a facility's ''fenceline'' using time integrated passive sampling (Reference 2).

2.2.2 Collecting samples and meteorological data at progressively higher frequencies may be employed to resolve shorter term concentration fluctuations and wind conditions that could introduce interfering emissions from other sources.

2.2.3 This passive sampling method provides a low cost approach to screening of fugitive or area emissions compared to active sampling methods that are based on pumped sorbent tubes or time weighted average canister sampling.

2.2.3.1 Additional passive sampling tubes may be deployed at different distances from the facility property boundary or from the geometric center of the fugitive emission source.

2.2.3.2 Additional meteorological measurements may also be collected as needed to perform preliminary gradient-based assessment of the extent of the pollution plume at ground level and the effect of ''background'' sources contributing to airborne VOC concentrations at the location.

2.2.4 Time-resolved concentration measurements coupled with time-resolved meteorological monitoring may be used to generate data needed for source apportionment procedures and mass flux calculations.

## 3.0 Definitions

(See also Section 3.0 of Method 325B.)

3.1 *Fenceline* means the property boundary of a facility or internal monitoring perimeter established in accordance with the requirements in Section 8.2 of this method.

3.2 *Passive sampler (PS)* means a specific type of sorbent tube (defined in this method) that has a fixed dimension air (diffusion) gap at the sampling end and is sealed at the other end.

3.3 *Passive sampling* refers to the activity of quantitatively collecting VOC on sorbent tubes using the process of diffusion.

3.4 $PS_i$ is the annual average for all PS concentration results from location *i*.

3.5 $PS_{i3}$ is the set of annual average concentration results for $PS_i$ and two sorbent tubes nearest to the PS location *i*.

3.6 $PS_{ip}$ is the concentration from the sorbent tube at location *i* for the test period or episode p.

3.7 *Sampling period* is the length of time each passive sampler is exposed during field monitoring. The sampling period for this method is 14 days.

3.8 *Sorbent tube* (Also referred to as tube, PS tube, adsorbent tube, and sampling tube) is an inert coated stainless steel tube. Standard PS tube dimensions for this method are 3.5-inch (89 mm) long × 0.25-inch (6.4 mm) o.d. with an i.d. of 5 mm, a cross-sectional area of 19.6 $mm^2$ and an air gap of 15 mm. The central portion of the tube is packed with solid adsorbent material contained between 2 × 100-mesh stainless steel gauzes and terminated with a diffusion cap at the sampling end of the tube. These axial passive samplers are installed under a protective hood during field deployment.

NOTE: Glass and glass- (or fused silica-) lined stainless steel sorbent tubes (typically 4 mm i.d.) are also available in various lengths to suit different makes of thermal desorption equipment, but these are rarely used for passive sampling because it is more difficult to adequately define the diffusive air gap in glass or glass-line tubing. Such tubes are not recommended for this method.

## 4.0 SAMPLING INTERFERENCES

### 4.1 GENERAL INTERFERENCES

Passive tube samplers should be sited at a distance beyond the influence of possible obstructions such as trees, walls, or buildings at the monitoring site. Complex topography and physical site obstructions, such as bodies of water, hills, buildings, and other structures that may prevent access to a planned PS location must be taken into consideration. You must document and report siting interference with the results of this method.

### 4.2 BACKGROUND INTERFERENCE

Nearby or upwind sources of target emissions outside the facility being tested can contribute to background concentrations. Moreover, because passive samplers measure continuously, changes in wind direction can cause variation in the level of background concentrations from interfering sources during the monitoring period. This is why local meteorological information, particularly wind direction and speed, is required to be collected throughout the monitoring period. Interfering sources can include neighboring industrial facilities, transportation facilities, fueling operations, combustion sources, short-term transient sources, residential sources, and nearby highways or roads. As PS data are evaluated, the location of potential interferences with respect to PS locations and local wind conditions should be considered, especially when high PS concentration values are observed.

### 4.3 TUBE HANDLING

You must protect the PS tubes from gross external contamination during field sampling. Analytical thermal desorption equipment used to analyze PS tubes must desorb organic compounds from the interior of PS tubes and exclude contamination from external sampler surfaces in the analytical/sample flow path. If the analytical equipment does not comply with this requirement, you must wear clean, white, cotton or powder-free nitrile gloves to handle sampling tubes to prevent contamination of the external sampler surfaces. Sampling tubes must be capped with two-piece, brass, 0.25 inch, long-term storage caps fitted with combined polytetrafluoroethylene ferrules (see Section 6.1 and Method 325B) to prevent ingress of airborne contaminants outside the sampling period. When not being used for field monitoring, the capped tubes must be stored in a clean, air-tight, shipping container to prevent the collection of VOCs (see Section 6.4.2 of Method 325B).

### 4.4 LOCAL WEATHER CONDITIONS AND AIRBORNE PARTICULATES

Although air speeds are a constraint for many forms of passive samplers, axial tube PS devices have such a slow inherent uptake rate that they are largely immune to these effects (References 4,5). Passive samplers must nevertheless be deployed under non-emitting weatherproof hoods to moderate the effect of local weather conditions such as solar heating and rain. The cover must not impede the ingress of ambient air. Sampling tubes should also be orientated vertically and pointing downwards, to minimize accumulation of particulates.

### 4.5 TEMPERATURE

The normal working range for field sampling for sorbent packing is 0–40 °C (References 6,7). Note that most published passive uptake rate data for sorbent tubes is quoted at 20 °C. Note also that, as a rough guide, an increase in temperature of 10 °C will reduce the collection capacity for a given analyte on a given sorbent packing by a factor of 2, but the uptake rate will not change significantly (Reference 4).

## 5.0 SAFETY

This method does not purport to include all safety issues or procedures needed when deploying or collecting passive sampling tubes. Precautions typical of field air sampling projects are required. Tripping, falling, electrical, and weather safety considerations must all be included in plans to deploy and collect passive sampling tubes.

## 6.0 SAMPLING EQUIPMENT AND SUPPLIES, AND PRE-DEPLOYMENT PLANNING

This section describes the equipment and supplies needed to deploy passive sampling monitoring equipment at a facility property boundary. Details of the passive sampling tubes themselves and equipment required for subsequent analysis are described in Method 325B.

### 6.1 PASSIVE SAMPLING TUBES

The industry standard PS tubes used in this method must meet the specific configuration and preparation requirements described in Section 3.0 of this method and Section 6.1 of Method 325B.

NOTE: The use of PS tubes packed with various sorbent materials for monitoring a wide variety of organic compounds in ambient air has been documented in the literature (References 4–10). Other sorbents may be used in standard passive sampling tubes for monitoring additional target compound(s) once their uptake rate and performance has been demonstrated following procedures in Addendum A to Method 325B. Guidance on sorbent selection can also be obtained from relevant national and international standard methods such as ASTM D6196–03 (Reapproved 2009) (Reference 14) and ISO 16017–2:2003(E) (Reference 13) (both incorporated by reference—see § 63.14).

### 6.2 PASSIVE OR DIFFUSIVE SAMPLING CAP

One diffusive sampling cap is required per PS tube. The cap fits onto the sampling end of the tube during air monitoring. The other end of the tube remains sealed with the long-term storage cap. Each diffusive sampling cap is fitted with a stainless steel gauze, which defines the outer limit of the diffusion air gap.

### 6.3 SORBENT TUBE PROTECTION COVER

A simple weatherproof hood, suitable for protecting passive sampling tubes from the worst of the weather (see Section 4.4) consists of an inverted cone/funnel constructed of an inert, non-outgassing material that fits over the diffusive tube, with the open (sampling) end of the tube projecting just below the cone opening. An example is shown in Figure 6.1 (Adapted from Reference 13).

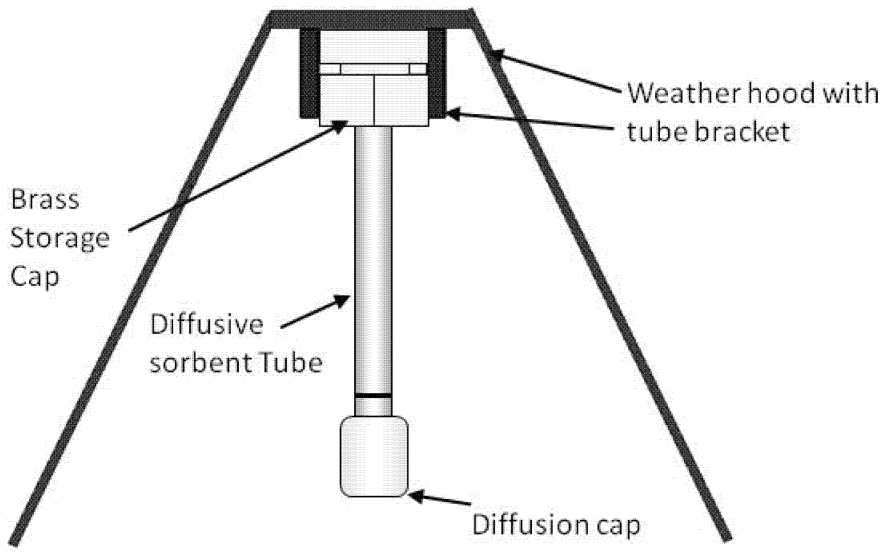


**Figure 6.1. PS Tube with Weather Protector**

6.4 THERMAL DESORPTION APPARATUS

If the analytical thermal desorber that will subsequently be used to analyze the passive sampling tubes does not meet the requirement to exclude outer surface contaminants from the sample flow path (see Section 6.6 of Method 325B), then clean, white, cotton or powder-free nitrile gloves must be used for handling the passive sampling tubes during field deployment.

6.5 SORBENT SELECTION

Sorbent tube configurations, sorbents or other VOC not listed in this method must be evaluated according to Method 325B, Addendum A or ISO 16017–2:2003(E) (Reference 13) (incorporated by reference—see §63.14). The supporting evaluation and verification data described in Method 325B, Addendum A for configurations or compounds different from the ones described in this method must meet the performance requirements of Method 325A/B and must be submitted with the test plan for your measurement program.

7.0 REAGENTS AND STANDARDS

No reagents or standards are needed for the field deployment and collection of passive sampling tubes. Specifications for sorbents, gas and liquid phase standards, preloaded standard tubes, and carrier gases are covered in Section 7 of Method 325B.

8.0 SAMPLE DEPLOYMENT, RECOVERY, AND STORAGE

Pre-deployment and planning steps are required before field deployment of passive sampling tubes. These activities include but are not limited to conducting a site visit, determining suitable and required monitoring locations, and determining the monitoring frequency to be used.

8.1 CONDUCTING THE SITE VISIT

8.1.1 Determine the size and shape of the facility footprint in order to determine the required number of monitoring locations.

8.1.2 Identify obstacles or obstructions (buildings, roads, fences), hills and other terrain issues (*e.g.*, bodies of water or swamp land) that could interfere with air parcel flow to the sampler or that prevent reasonable access to the location. You may use the general guidance in Section 4.1 of this method during the site visit to identify sampling locations. You must evaluate the placement of each passive sampler to determine if the conditions in this section are met.

8.1.3 Identify to the extent possible and record potential off-site source interferences (*e.g.*, neighboring industrial facilities, transportation facilities, fueling operations, combustion sources, short-term transient sources, residential sources, nearby highways).

8.1.4 Identify the closest available meteorological station. Identify potential locations for one or more on-site or near-site meteorological station(s) following the guidance in EPA–454/B–08–002 (Reference 11) (incorporated by reference—see §63.14).

### 8.2 Determining Sampling Locations (References 2, 3)

8.2.1 The number and placement of the passive samplers depends on the size, the shape of the facility footprint or the linear distance around the facility, and the proximity of emission sources near the property boundaries. Aerial photographs or site maps may be used to determine the size (acreage) and shape of the facility or the length of the monitoring perimeter. Place passive samplers on an internal monitoring perimeter on or inside the facility boundary encompassing all emission sources at the facility at different angles circling the geometric center of the facility or at different distances based on the monitoring perimeter length of the facility.

NOTE: In some instances, permanent air monitoring stations may already be located in close proximity to the facility. These stations may be operated and maintained by the site, or local or state regulatory agencies. If access to the station is possible, a PS may be deployed adjacent to other air monitoring instrumentation. A comparison of the pollutant concentrations measured with the PS to concentrations measured by site instrumentation may be used as an optional data quality indicator to assess the accuracy of PS results.

8.2.1.1 The monitoring perimeter may be located between the property boundary and any potential emission source near the property boundary, as long as the distance from the source to the monitoring perimeter is at least 50 meters (162 feet). If a potential emissions source is within 50 meters (162 feet) of the property boundary, the property boundary shall be used as the monitoring perimeter near that source.

8.2.1.2 Samplers need only be placed around the monitoring perimeter and not along internal roads or other right of ways that may bisect the facility.

8.2.1.3 An extra sampler must be placed near known sources of VOCs if potential emission sources are within 50 meters (162 feet) of the boundary and the source or sources are located between two monitors. Measure the distance (x) between the two monitors and place another monitor approximately halfway between (x/2 ±10 percent) the two monitors. Only one extra sampler is required between two monitors to account for known sources of VOCs. For example, in Figure 8.1, the facility added three additional monitors (*i.e.*, light shaded sampler locations), and in Figure 8.2, the facility added two additional monitors to provide sufficient coverage of all area sources.

FIGURE 8.1. FACILITY WITH A REGULAR SHAPE BETWEEN 750 AND 1,500 ACRES IN AREA

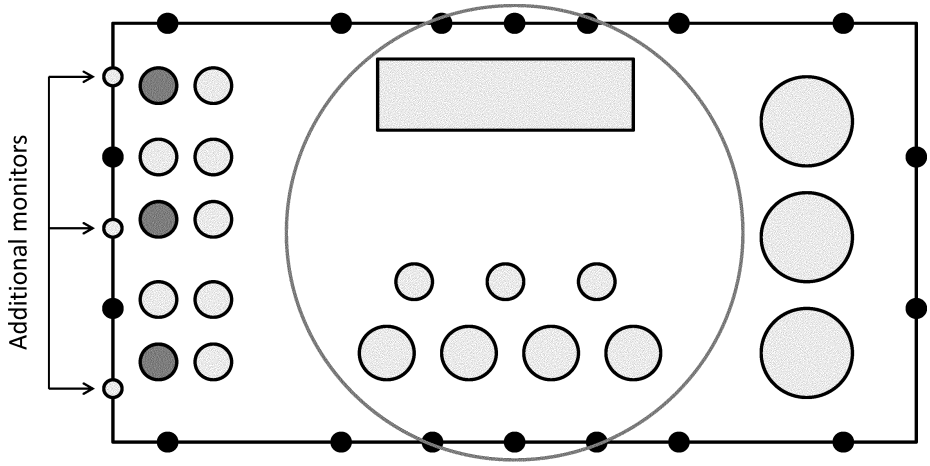


Refinery (20° Angle)

Note: Shaded sources are within 50 meters of the property boundary and are located between two monitors. Additional coverage required by this method was accomplished by placing the monitors halfway between two existing monitors.

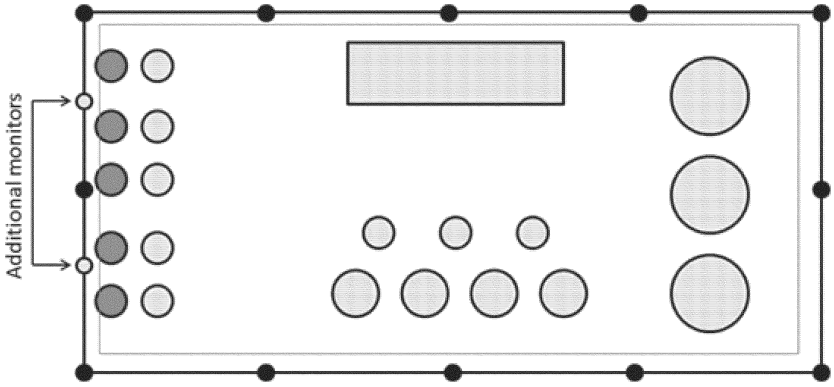


Refinery (24,000 Feet Perimeter)

Note: Shaded sources are within 50 meters of the property boundary and are located between two monitors. Additional coverage required by this method was accomplished by placing the monitors halfway between two existing monitors.

**Figure 8.2. Facility with a Boundary Length of 24,000 feet**

FIGURE 8.1. FACILITY WITH A REGULAR SHAPE BETWEEN 750 AND 1,500 ACRES IN AREA

8.2.2 Option 1 for Determining Sampling Locations.

8.2.2.1 For facilities with a regular (circular, triangular, rectangular, or square) shape, determine the geographic center of the facility.

8.2.2.1.1 For facilities with an area of less than or equal to 750 acres, measure angles of 30 degrees from the center point for a total of twelve 30 degree measurements evenly spaced (±1 degree).

8.2.2.1.2 For facilities covering an area greater than 750 acres but less than or equal to 1,500 acres, measure angles of 20 degrees from the center point for a total of eighteen 20 degree measurements evenly spaced (±1 degree). Figure 8.1 shows the monitor placement around the property boundary of a facility with an area between 750 and 1,500 acres. Monitor placements are represented with black dots along the property boundary.

8.2.2.1.3 For facilities covering an area greater than 1,500 acres, measure angles of 15 degrees from the center point for a total of twenty-four 15 degree measurements evenly spaced (±1 degree).

8.2.2.1.4 Locate each sampling point where the measured angle intersects the outer monitoring perimeter.

8.2.2.2 For irregularly shaped facilities, divide the area into a set of connecting subarea circles, triangles or rectangles to determine sampling locations. The subareas must be defined such that a circle can reasonably encompass the subarea. Then determine the geometric center point of each of the subareas.

8.2.2.2.1 If a subarea is less than or equal to 750 acres (*e.g.*, Figure 8.3), measure angles of 30 degrees from the center point for a total of twelve 30 degree measurements (±1 degree).

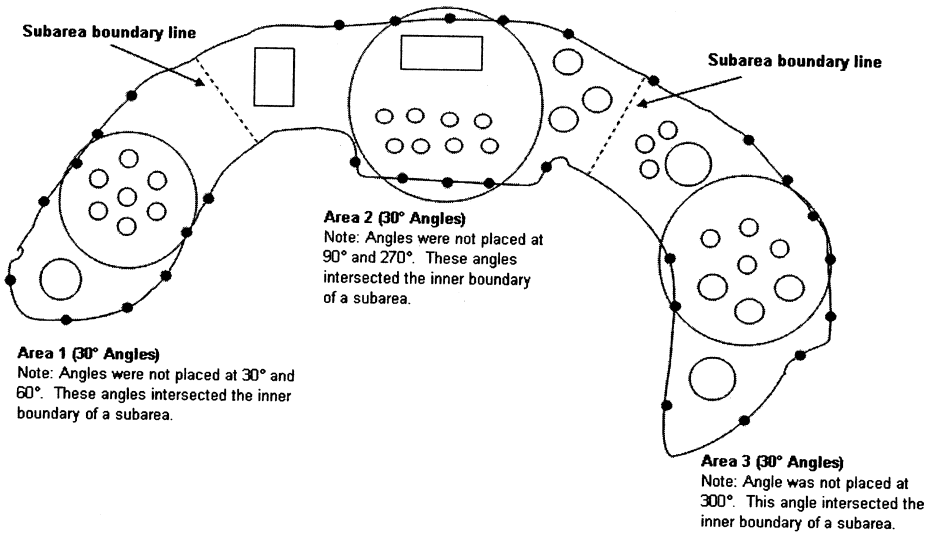


**Figure 8.3. Facility Divided into Three Subareas**

8.2.2.2.2 If a subarea is greater than 750 acres but less than or equal to 1,500 acres (*e.g.*, Figure 8.4), measure angles of 20 degrees from the center point for a total of eighteen 20 degree measurements (±1 degree).

8.2.2.2.3 If a subarea is greater than 1,500 acres, measure angles of 15 degrees from the center for a total of twenty-four 15 degree measurements (±1 degree).

8.2.2.2.4 Locate each sampling point where the measured angle intersects the outer monitoring perimeter. Sampling points need not be placed closer than 152 meters (500 feet) apart (or 76 meters (250 feet) if known sources are within 50 meters (162 feet) of the

monitoring perimeter), as long as a minimum of 3 monitoring locations are used for each subarea.

8.2.2.2.5 Sampling sites are not needed at the intersection of an inner boundary with an adjacent subarea. The sampling location must be sited where the measured angle intersects the subarea's outer monitoring perimeter.

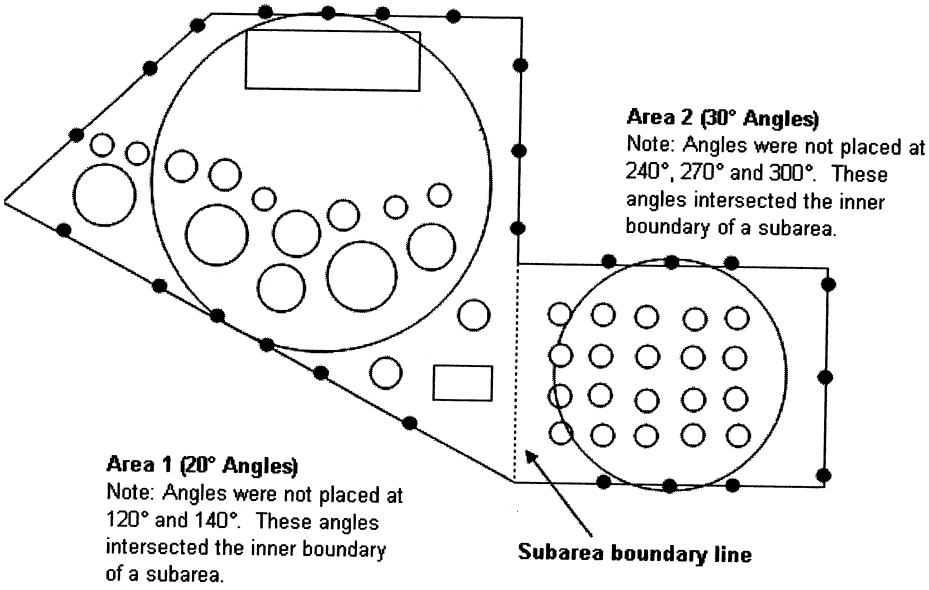


**Figure 8.4. Facility Divided into Two Subareas**

8.2.3 Option 2 for Determining Sampling Locations.

8.2.3.1 For facilities with a monitoring perimeter length of less than 7,315 meters (24,000 feet), a minimum of twelve sampling locations evenly spaced ±10 percent of the location interval is required.

8.2.3.2 For facilities with a monitoring perimeter length greater than or equal to 7,315 meters (24,000 feet), sampling locations are spaced 610 ± 76 meters (2,000 ± 250 feet) apart.

8.2.3.3 Unless otherwise specified in an applicable regulation, permit or other requirement, for small disconnected subareas with known sources within 50 meters (162 feet) of the monitoring perimeter, sampling points need not be placed closer than 152 meters (500 feet) apart as long as a minimum of 3 monitoring locations are used for each subarea.

### 8.3 Siting a Meteorological Station

A meteorological station is required at or near the facility you are monitoring. A number of commercially available meteorological stations can be used. Information on meteorological instruments can be found in EPA–454/R–99–005 (Reference 11) (incorporated by reference—see §63.14). Some important considerations for siting of meteorological stations are detailed below.

8.3.1 Place meteorological stations in locations that represent conditions affecting the transport and dispersion of pollutants in the area of interest. Complex terrain may require the use of more than one meteorological station.

8.3.2 Deploy wind instruments over level, open terrain at a height of 10 meters (33 feet). If possible, locate wind instruments at a distance away from nearby structures that is equal to at least 10 times the height of the structure.

8.3.3 Protect meteorological instruments from thermal radiation and adequately ventilate them using aspirated shields. The temperature sensor must be located at a distance away from any nearby structures that is equal to at least four times the height of the structure. Temperature sensors must be located at least 30 meters (98 feet) from large paved areas.

8.3.4 Collect and record meteorological data, including wind speed, wind direction, temperature and barometric pressure on an hourly basis. Calculate average unit vector wind direction, sigma theta, temperature and barometric pressure per sampling period to enable calculation of concentrations at standard conditions. Supply this information to the laboratory.

8.3.5 Identify and record the location of the meteorological station by its GPS coordinate.

### 8.4 Monitoring Frequency

8.4.1 Sample collection may be performed for periods up to 14 days.

8.4.2 A site screening protocol that meets method requirements may be performed by collecting samples for a year where each PS accumulates VOC for a 14-day sampling period. Study results are accumulated for the sampling periods (typically 26) over the course of one calendar year. To the extent practical, sampling tubes should be changed at approximately the same time of day at each of the monitoring sites.

8.4.3 When extenuating circumstances do not permit safe deployment or retrieval of passive samplers (*e.g.*, extreme weather, power failure), sampler placement or retrieval earlier or later than the prescribed schedule is allowed but must occur as soon as safe access to sampling sites is possible.

### 8.5 Passive Sampler Deployment

8.5.1 Clean (conditioned) sorbent tubes must be prepared and packaged by the laboratory as described in Method 325B and must be deployed for sampling within 30 days of conditioning.

8.5.2 Allow the tubes to equilibrate with ambient temperature (approximately 30 minutes to 1 hour) at the monitoring location before removing them from their storage/shipping container for sample collection.

8.5.3 If there is any risk that the analytical equipment will not meet the requirement to exclude contamination on outer tube surfaces from the sample flow path (see Section 6.6 of Method 325B), sample handlers must wear clean, white, cotton or powder-free nitrile gloves during PS deployment and collection and throughout any other tube handling operations.

8.5.4 Inspect the sampling tubes immediately prior to deployment. Ensure that they are intact, securely capped, and in good condition. Any suspect tubes (*e.g.*, tubes that appear to have leaked sorbent) should be removed from the sampling set.

8.5.5 Secure passive samplers so the bottom of the diffusive sampling cap is 1.5 to 3 meters (4.9 to 9.8 feet) above ground using a pole or other secure structure at each sampling location. Orient the PS vertically and with the sampling end pointing downward to avoid ingress of particulates.

NOTE: Duplicate sampling assemblies must be deployed in at least one monitoring location for every 10 monitoring locations during each field monitoring period.

8.5.6 Protect the PS from rain and excessive wind velocity by placing them under the type of protective hood described in Section 6.1.3 or equivalent.

8.5.7 Remove the storage cap on the sampling end of the tube and replace it with a diffusive sampling cap at the start of the sampling period. Make sure the diffusion cap is properly seated and store the removed storage caps in the empty tube shipping container.

8.5.8 Record the start time and location details for each sampler on the field sample data sheet (see example in Section 17.0.).

8.5.9 Expose the sampling tubes for the required sampling period-normally 14-days.

8.5.10 Field blank tubes (see Section 9.3 of Method 325B) are stored outside the shipping container at representative sampling locations around the site, but with both long-term storage caps kept in place throughout the monitoring exercise. Collect at least two field blanks sorbent samples per sampling period to ensure sample integrity associated with shipment, collection, and storage.

### 8.6 Sorbent Tube Recovery and Meteorological Data Collection

Recover deployed sampling tubes and field blanks as follows:

8.6.1 After the sampling period is complete, immediately replace the diffusion end cap on each sampled tube with a long-term storage end cap. Tighten the seal securely by hand and then tighten an additional quarter turn with an appropriate tool. Record the stop date and time and any additional relevant information on the sample data sheet.

8.6.2 Place the sampled tubes, together with the field blanks, in the storage/shipping container. Label the storage container, but do not use paints, markers, or adhesive labels to identify the tubes. TD-compatible electronic (radio frequency identification (RFID)) tube labels are available commercially and are compatible with some brands of thermal desorber. If used, these may be programmed with relevant tube and sample information, which can be read and automatically transcribed into the sequence report by the TD system.

NOTE: Sampled tubes must not be placed in the same shipping container as clean conditioned sampling tubes.

8.6.3 Sampled tubes may be shipped at ambient temperature to a laboratory for sample analysis.

8.6.4 Specify whether the tubes are field blanks or were used for sampling and document relevant information for each tube using a Chain of Custody form (see example

in Section 17.0) that accompanies the samples from preparation of the tubes through receipt for analysis, including the following information: Unique tube identification numbers for each sampled tube; the date, time, and location code for each PS placement; the date, time, and location code for each PS recovery; the GPS reference for each sampling location; the unique identification number of the duplicate sample (if applicable); and problems or anomalies encountered.

8.6.5 If the sorbent tubes are supplied with electronic (*e.g.*, RFID) tags, it is also possible to allocate a sample identifier to each PS tube. In this case, the recommended format for the identification number of each sampled tube is AA–BB–CC–DD–VOC, where:

AA = Sequence number of placement on route (01, 02, 03 . . .)
BB = Sampling location code (01, 02, 03 . . .)
CC = 14-day sample period number (01 to 26)
DD = Sample code (SA = sample, DU = duplicate, FB = field blank)
VOC = 3-letter code for target compound(s) (*e.g.*, BNZ for benzene or BTX for benzene, toluene, and xylenes)

NOTE: Sampling start and end times/dates can also be logged using RFID tube tags.

## 9.0 QUALITY CONTROL

9.1 Most quality control checks are carried out by the laboratory and associated requirements are in Section 9.0 of Method 325B, including requirements for laboratory blanks, field blanks, and duplicate samples.

9.2 Evaluate for potential outliers the laboratory results for neighboring sampling tubes collected over the same time period. A potential outlier is a result for which one or more PS tube does not agree with the trend in results shown by neighboring PS tubes—particularly when data from those locations have been more consistent during previous sampling periods. Accidental contamination by the sample handler must be documented before any result can be eliminated as an outlier. Rare but possible examples of contamination include loose or missing storage caps or contaminated storage/shipping containers. Review data from the same and neighboring monitoring locations for the subsequent sampling periods. If the anomalous result is not repeated for that monitoring location, the episode can be ascribed to transient contamination and the data in question must be flagged for potential elimination from the dataset.

### 9.3 DUPLICATES AND FIELD BLANKS

9.3.1 Collect at least one co-located/duplicate sample for every 10 field samples to determine precision of the measurements.

9.3.2 Collect at least two field blanks sorbent samples per sampling period to ensure sample integrity associated with shipment, collection, and storage. You must use the entire sampling apparatus for field blanks including unopened sorbent tubes mounted in protective sampling hoods. The tube closures must not be removed. Field blanks must be placed in two different quadrants (*e.g.*, 90° and 270°) and remain at the sampling location for the sampling period.

## 10.0 CALIBRATION AND STANDARDIZATION

Follow the calibration and standardization procedures for meteorological measurements in EPA–454/B–08–002 March 2008 (Reference 11) (incorporated by reference—see §63.14). Refer to Method 325B for calibration and standardization procedures for analysis of the passive sampling tubes.

## 11.0 ANALYTICAL PROCEDURES

Refer to Method 325B, which provides details for the preparation and analysis of sampled passive monitoring tubes (preparation of sampling tubes, shipment and storage of exposed sampling tubes, and analysis of sampling tubes).

## 12.0 DATA ANALYSIS, CALCULATIONS AND DOCUMENTATION

### 12.1 CALCULATE ANNUAL AVERAGE FENCELINE CONCENTRATION.

After a year's worth of sampling at the facility fenceline (for example, 26 14-day samples), the average ($PS_i$) may be calculated for any specified period at each PS location using Equation 12.1.

$$PS_i = \frac{\sum PS_{ip}}{N} \qquad \text{Eq. 12.1}$$

Where:

$PS_i$ = Annual average for location *i*.
$PS_{ip}$ = Sampling period specific concentration from Method 325B.
i = Location of passive sampler (0 to 360°).
p = The sampling period.
N = The number of sampling periods in the year (*e.g.*, for 14-day sampling periods, from 1 to 26).

NOTE: $PS_{ip}$ is a function of sampling location-specific factors such as the contribution from facility sources, unusual localized meteorological conditions, contribution from nearby interfering sources, the background caused by integrated far-field sources and measurement error due to deployment, handling, siting, or analytical errors.

### 12.2 IDENTIFY SAMPLING LOCATIONS OF INTEREST

If data from neighboring sampling locations are significantly different, then you may add extra sampling points to isolate background contributions or identify facility-specific ''hot spots.''

### 12.3 EVALUATE TRENDS

You may evaluate trends and patterns in the PS data over multiple sampling periods to determine if elevated concentrations of target compounds are due to operations on the facility or if contributions from background sources are significant.

12.3.1 Obtain meteorological data including wind speed and wind direction or unit vector wind data from the on-site meteorological station. Use this meteorological data to determine the prevailing wind direction and speed during the periods of elevated concentrations.

12.3.2 As an option you may perform preliminary back trajectory calculations (*http://ready.arl.noaa.gov/HYSPLIT.php*) to aid in identifying the source of the background contribution to elevated target compound concentrations.

12.3.3 Information on published or documented events on- and off-site may also be included in the associated sampling period report to explain elevated concentrations if relevant. For example, you would describe if there was a chemical spill on site, or an accident on an adjacent road.

12.3.4 Additional monitoring for shorter periods (See section 8.4) may be necessary to allow better discrimination/resolution of contributing emission sources if the measured trends and associated meteorology do not provide a clear assessment of facility contribution to the measured fenceline concentration.

12.3.5 Additional records necessary to calculate sampling period average target compound concentration can be found in Section 12.1 of Method 325B.

## 13.0 METHOD PERFORMANCE

Method performance requirements are described in Method 325B.

## 14.0 POLLUTION PREVENTION

[Reserved]

## 15.0 WASTE MANAGEMENT

[Reserved]

## 16.0 REFERENCES


1. Ambient air quality—Standard method for measurement of benzene concentrations—Part 4: Diffusive sampling followed by thermal desorption and gas chromatography, BS EN 14662–4:2005.
2. Thoma, E.D., Miller, C.M., Chung, K.C., Parsons, N.L. and Shine, B.C. Facility Fence Line Monitoring using Passive Samplers, J. Air & Waste Mange. Assoc. 2011, 61:834–842.
3. Quality Assurance Handbook for Air Pollution C Systems, Volume II: Ambient Air Quality Monitoring Program, EPA–454/B–13–003, May 2013. Available at *http://www.epa.gov/ttnamti1/files/ambient/pm25/qa/QA-Handbook-Vol-II.pdf*.
4. Brown, R.H., Charlton, J. and Saunders, K.J.: The development of an improved diffusive sampler. Am. Ind. Hyg. Assoc. J. 1981, 42(12): 865–869.
5. Brown, R. H. Environmental use of diffusive samplers: evaluation of reliable diffusive uptake rates for benzene, toluene and xylene. J. Environ. Monit. 1999, 1 (1), 115–116.
6. Ballach, J.; Greuter, B.; Schultz, E.; Jaeschke, W. Variations of uptake rates in benzene diffusive sampling as a function of ambient conditions. Sci. Total Environ. 1999, 244, 203–217.
7. Brown, R. H. Monitoring the ambient environment with diffusive samplers: theory and practical considerations. J Environ. Monit. 2000, 2 (1), 1–9.
8. Buzica, D.; Gerboles, M.; Plaisance, H. The equivalence of diffusive samplers to reference methods for monitoring $O_3$, benzene and $NO_2$ in ambient air. J. Environ. Monit. 2008, 10 (9), 1052–1059.
9. Woolfenden, E. Sorbent-based sampling methods for volatile and semi-volatile organic compounds in air. Part 2. Sorbent selection and other aspects of optimizing air monitoring methods. J. Chromatogr. A 2010, 1217, (16), 2685–94.
10. Pfeffer, H. U.; Breuer, L. BTX measurements with diffusive samplers in the vicinity of a cokery: Comparison between ORSA-type samplers and pumped sampling. J. Environ. Monit. 2000, 2 (5), 483–486.
11. US EPA. 2000. Meteorological Monitoring Guidance for Regulatory Modeling Applications. EPA–454/R–99–005. Office of Air Quality Planning and Standards, Research Triangle Park, NC. February 2000. Available at *http://www.epa.gov/scram001/guidance/met/mmgrma.pdf*.
12. Quality Assurance Handbook for Air Pollution Measurement Systems. Volume IV: Meteorological Measurements Version 2.0 Final, EPA–454/B–08–002 March 2008. Available at *http://www.epa.gov/ttnamti1/files/ambient/met/Volume%20IV__Meteorological__*

*Measurements.pdf*.

13. ISO 16017–2:2003(E), Indoor, ambient and workplace air—Sampling and analysis of volatile organic compounds by sorbent tube/thermal desorption/capillary gas chromatography. Part 2: Diffusive sampling.

14. ASTM D6196–03 (Reapproved 2009): Standard practice for selection of sorbents, sampling, and thermal desorption analysis procedures for volatile organic compounds in air.

17.0 TABLES, DIAGRAMS, FLOWCHARTS AND VALIDATION DATA

**Method 325 A/B**

**EXAMPLE FIELD TEST DATA SHEET (FTDS)**
**AND**
**CHAIN OF CUSTODY**

**I. GENERAL INFORMATION**

SITE NAME:
_____
SITE LOCATION ADDRESS:
_____
CITY: _____STATE: _____ ZIP: _____

**II. SAMPLING DATA**

| Sample ID (Tube) # | Sorbent | Sample or blank | Start Date | Start Time | Stop Date | Stop Time | Location (gps) | Ambient Temp. (°F) | Barometric Pressure (in. Hg) |
|---|---|---|---|---|---|---|---|---|---|
| | | | | | | | | | |
| | | | | | | | | | |
| | | | | | | | | | |
| | | | | | | | | | |
| | | | | | | | | | |
| | | | | | | | | | |

**III. CUSTODY INFORMATION**

COLLECTED BY: _____
Relinquished to Shipper -
Name: _____ Date: _____ Time _____
Received by Laboratory -
Name _____ Date: _____ Time _____
Sample condition upon receipt:
_____
Analysis Required:
_____
_____
Comments:
_____
_____
_____

**Figure 17.1. Example Field Data Form and Chain of Custody**

METHOD 325B—VOLATILE ORGANIC COMPOUNDS FROM FUGITIVE AND AREA SOURCES:

SAMPLER PREPARATION AND ANALYSIS

1.0 SCOPE AND APPLICATION

1.1 This method describes thermal desorption/gas chromatography (TD/GC) analysis of volatile organic compounds (VOCs) from fugitive and area emission sources collected onto sorbent tubes using passive sampling. It could also be applied to the TD/GC analysis of VOCs collected using active (pumped) sampling onto sorbent tubes. The concentration of airborne VOCs at or near potential fugitive- or area-emission sources may be determined using this method in combination with Method 325A. Companion Method 325A (Sampler Deployment and VOC Sample Collection) describes procedures for deploying the sorbent tubes and passively collecting VOCs.

1.2 The preferred GC detector for this method is a mass spectrometer (MS), but flame ionization detectors (FID) may also be used. Other conventional GC detectors such as electron capture (ECD), photoionization (PID), or flame photometric (FPD) may also be used if they are selective and sensitive to the target compound(s) and if they meet the method performance criteria provided in this method.

1.3 There are 97 VOCs listed as hazardous air pollutants in Title III of the Clean Air Act Amendments of 1990. Many of these VOC are candidate compounds for this method. Compounds with known uptake rates for Carbograph™ 1 TD, Carbopack™ B, or Carbopack™ X are listed in Table 12.1. This method provides performance criteria to demonstrate acceptable performance of the method (or modifications of the method) for monitoring one or more of the compounds listed Table 12.1. If standard passive sampling tubes are packed with other sorbents or used for other analytes than those listed in Table 12.1, then method performance and relevant uptake rates should be verified according to Addendum A to this method or by one of the following national/international standard methods: ISO 16017–2:2003(E), ASTM D6196–03 (Reapproved 2009), or BS EN 14662–4:2005 (all incorporated by reference—see §63.14), or reported in the peer-reviewed open literature.

1.4 The analytical approach using TD/GC/MS is based on previously published EPA guidance in Compendium Method TO–17 (*http://www.epa.gov/ttnamti1/airtox.html#compendium*) (Reference 1), which describes active (pumped) sampling of VOCs from ambient air onto tubes packed with thermally stable adsorbents.

1.5 Inorganic gases not suitable for analysis by this method include oxides of carbon, nitrogen and sulfur, ozone ($O_3$), and other diatomic permanent gases. Other pollutants not suitable for this analysis method include particulate pollutants, (*i.e.*, fumes, aerosols, and dusts), compounds too labile (reactive) for conventional GC analysis, and VOCs that are more volatile than propane.

2.0 SUMMARY OF METHOD

2.1 This method provides procedures for the preparation, conditioning, blanking, and shipping of sorbent tubes prior to sample collection.

2.2 Laboratory and field personnel must have experience of sampling trace-level VOCs using sorbent tubes (References 2,5) and must have experience operating thermal desorption/GC/multi-detector instrumentation.

2.3 Key steps of this method as implemented for each sample tube include: Stringent leak testing under stop flow, recording ambient temperature conditions, adding internal standards, purging the tube, thermally desorbing the sampling tube, refocusing on a focusing trap, desorbing and transferring/injecting the VOCs from the secondary trap into the capillary GC column for separation and analysis.

2.4 Water management steps incorporated into this method include: (a) Selection of hydrophobic sorbents in the sampling tube; (b) optional dry purging of sample tubes prior to analysis; and (c) additional selective elimination of water during primary (tube) desorption (if required) by selecting trapping sorbents and temperatures such that target compounds are quantitatively retained while water is purged to vent.

3.0 DEFINITIONS

(See also Section 3.0 of Method 325A).

3.1 Blanking is the desorption and confirmatory analysis of conditioned sorbent tubes before they are sent for field sampling.

3.2 *Breakthrough volume and associated relation to passive sampling*. Breakthrough volumes, as applied to active sorbent tube sampling, equate to the volume of air containing a constant concentration of analyte that may be passed through a sorbent tube at a given temperature before a detectable level (5 percent) of the input analyte concentration elutes from the tube. Although breakthrough volumes are directly related to active rather than passive sampling, they provide a measure of the strength of the sorbent-sorbate interaction and therefore also relate to the efficiency of the passive sampling process. The best direct measure of passive sampling efficiency is the stability of the uptake rate. Quantitative passive sampling is compromised when the sorbent no longer acts as a perfect sink—*i.e.*, when the concentration of a target analyte immediately above the sorbent sampling surface no longer approximates to zero. This causes a reduction in the uptake rate over time. If

the uptake rate for a given analyte on a given sorbent tube remains relatively constant —*i.e.*, if the uptake rate determined for 48 hours is similar to that determined for 7 or 14 days—the user can be confident that passive sampling is occurring at a constant rate. As a general rule of thumb, such ideal passive sampling conditions typically exist for analyte:sorbent combinations where the breakthrough volume exceeds 100 L (Reference 4).

3.3 *Continuing calibration verification sample (CCV).* Single level calibration samples run periodically to confirm that the analytical system continues to generate sample results within acceptable agreement to the current calibration curve.

3.4 *Focusing trap* is a cooled, secondary sorbent trap integrated into the analytical thermal desorber. It typically has a smaller i.d. and lower thermal mass than the original sample tube allowing it to effectively refocus desorbed analytes and then heat rapidly to ensure efficient transfer/injection into the capillary GC analytical column.

3.5 *High Resolution Capillary Column Chromatography* uses fused silica capillary columns with an inner diameter of 320 µm or less and with a stationary phase film thickness of 5 µm or less.

3.6 *h* is time in hours.

3.7 *i.d.* is inner diameter.

3.8 *min* is time in minutes.

3.9 *Method Detection Limit* is the lowest level of analyte that can be detected in the sample matrix with 99% confidence.

3.10 *MS–SCAN* is the mode of operation of a GC quadrupole mass spectrometer detector that measures all ions over a given mass range over a given period of time.

3.11 *MS–SIM* is the mode of operation of a GC quadrupole mass spectrometer detector that measures only a single ion or a selected number of discrete ions for each analyte.

3.12 *o.d.* is outer diameter.

3.13 *ppbv* is parts per billion by volume.

3.14 *Thermal desorption* is the use of heat and a flow of inert (carrier) gas to extract volatiles from a solid matrix. No solvent is required.

3.15 *Total ion chromatogram* is the chromatogram produced from a mass spectrometer detector collecting full spectral information.

3.16 *Two-stage thermal desorption* is the process of thermally desorbing analytes from a sorbent tube, reconcentrating them on a focusing trap (see Section 3.4), which is then itself rapidly heated to ''inject'' the concentrated compounds into the GC analyzer.

3.17 *VOC* is volatile organic compound.

## 4.0 Analytical Interferences

4.1 *Interference from Sorbent Artifacts.* Artifacts may include target analytes as well as other VOC that co-elute chromatographically with the compounds of interest or otherwise interfere with the identification or quantitation of target analytes.

4.1.1 Sorbent decomposition artifacts are VOCs that form when sorbents degenerate, *e.g.*, when exposed to reactive species during sampling. For example, benzaldehyde, phenol, and acetophenone artifacts are reported to be formed via oxidation of the polymeric sorbent Tenax® when sampling high concentration (100–500 ppb) ozone atmospheres (Reference 5).

4.1.2 Preparation and storage artifacts are VOCs that were not completely cleaned from the sorbent tube during conditioning or that are an inherent feature of that sorbent at a given temperature.

4.2 *Humidity.* Moisture captured during sampling can interfere with VOC analysis. Passive sampling using tubes packed with hydrophobic sorbents, like those described in this method, minimizes water retention. However, if water interference is found to be an issue under extreme conditions, one or more of the water management steps described in Section 2.4 can be applied.

4.3 *Contamination from Sample Handling.* The type of analytical thermal desorption equipment selected should exclude the possibility of outer tube surface contamination entering the sample flow path (see Section 6.6). If the available system does not meet this requirement, sampling tubes and caps must be handled only while wearing clean, white cotton or powder free nitrile gloves to prevent contamination with body oils, hand lotions, perfumes, etc.

## 5.0 Safety

5.1 This method does not address all of the safety concerns associated with its use. It is the responsibility of the user of this standard to establish appropriate field and laboratory safety and health practices prior to use.

5.2 Laboratory analysts must exercise extreme care in working with high-pressure gas cylinders.

5.3 Due to the high temperatures involved, operators must use caution when conditioning and analyzing tubes.

## 6.0 Equipment and Supplies

6.1 *Tube Dimensions and Materials.* The sampling tubes for this method are 3.5-inches (89 mm) long, ¼ inch (6.4 mm) o.d., and 5 mm i.d. passive sampling tubes (see Figure 6.1). The tubes are made of inert-coated stainless steel with the central section (up to 60 mm) packed with sorbent, typically supported between two 100 mesh stainless steel gauze. The tubes have a cross sectional area of 19.6 square mm (5 mm i.d.). When used for passive sampling, these tubes have an internal diffusion (air) gap (DG) of 1.5 cm between the sorbent retaining gauze at the sampling end of the tube, and the gauze in the diffusion cap.

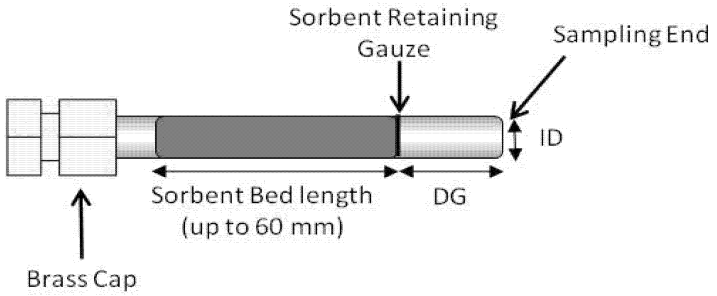


**Figure 6.1. Cross Section View of Passive Sorbent Tube**

6.2 TUBE CONDITIONING APPARATUS

6.2.1 Freshly packed or newly purchased tubes must be conditioned as described in Section 9 using an appropriate dedicated tube conditioning unit or the thermal desorber. Note that the analytical TD system should be used for tube conditioning if it supports a dedicated tube conditioning mode in which effluent from contaminated tubes is directed to vent without passing through key parts of the sample flow path such as the focusing trap.

6.2.2 Dedicated tube conditioning units must be leak-tight to prevent air ingress, allow precise and reproducible temperature selection (±5 °C), offer a temperature range at least as great as that of the thermal desorber, and support inert gas flows in the range up to 100 mL/min.

NOTE: For safety and to avoid laboratory contamination, effluent gases from freshly packed or highly contaminated tubes should be passed through a charcoal filter during the conditioning process to prevent desorbed VOCs from polluting the laboratory atmosphere.

6.3 TUBE LABELING

6.3.1 Label the sample tubes with a unique permanent identification number and an indication of the sampling end of the tube. Labeling options include etching and TD-compatible electronic (radio frequency identification (RFID)) tube labels.

6.3.2 To avoid contamination, do not make ink markings of any kind on clean sorbent tubes or apply adhesive labels.

NOTE: TD-compatible electronic (RFID) tube labels are available commercially and are compatible with some brands of thermal desorber. If used, these may be programmed with relevant tube and sample information, which can be read and automatically transcribed into the sequence report by the TD system (see Section 8.6 of Method 325A).

6.4 BLANK AND SAMPLED TUBE STORAGE APPARATUS

6.4.1 Long-term storage caps. Seal clean, blank and sampled sorbent tubes using inert, long-term tube storage caps comprising non-greased, 2-piece, 0.25-inch, metal SwageLok®-type screw caps fitted with combined polytetrafluoroethylene ferrules.

6.4.2 Storage and transportation containers. Use clean glass jars, metal cans or rigid, non-emitting polymer boxes.

NOTE: You may add a small packet of new activated charcoal or charcoal/silica gel to the shipping container for storage and transportation of batches of conditioned sorbent tubes prior to use. Coolers without ice packs make suitable shipping boxes for containers of tubes because the coolers help to insulate the samples from extreme temperatures (*e.g.*, if left in a parked vehicle).

6.5 UNHEATED GC INJECTION UNIT FOR LOADING STANDARDS ONTO BLANK TUBES

A suitable device has a simple push fit or finger-tightening connector for attaching the sampling end of blank sorbent tubes without damaging the tube. It also has a means of controlling carrier gas flow through the injector and attached sorbent tube at 50–100 mL/min and includes a low emission septum cap that allows the introduction of gas or liquid standards via appropriate syringes. Reproducible and quantitative transfer of higher boiling compounds in liquid standards is facilitated if the injection unit allows the tip of the syringe to just touch the sorbent retaining gauze inside the tube.

6.6 THERMAL DESORPTION APPARATUS

The manual or automated thermal desorption system must heat sorbent tubes while a controlled flow of inert (carrier) gas passes through the tube and out of the sampling end. The apparatus must also incorporate a focusing trap to quantitatively

refocus compounds desorbed from the tube. Secondary desorption of the focusing trap should be fast/efficient enough to transfer the compounds into the high resolution capillary GC column without band broadening and without any need for further pre- or on-column focusing. Typical TD focusing traps comprise small sorbent traps (Reference 16) that are electrically-cooled using multistage Peltier cells (References 17, 18). The direction of gas flow during trap desorption should be the reverse of that used for focusing to extend the compatible analyte volatility range. Closed cycle coolers offer another cryogen-free trap cooling option. Other TD system requirements and operational stages are described in Section 11 and in Figures 17–2 through 17–4.

### 6.7 Thermal Desorber—GC Interface

6.7.1 The interface between the thermal desorber and the GC must be heated uniformly and the connection between the transfer line insert and the capillary GC analytical column itself must be leak tight.

6.7.2 A portion of capillary column can alternatively be threaded through the heated transfer line/TD interface and connected directly to the thermal desorber.

NOTE: Use of a metal syringe-type needle or unheated length of fused silica pushed through the septum of a conventional GC injector is not permitted as a means of interfacing the thermal desorber to the chromatograph. Such connections result in cold spots, cause band broadening and are prone to leaks.

### 6.8 GC/MS Analytical Components

6.8.1 The GC system must be capable of temperature programming and operation of a high resolution capillary column. Depending on the choice of column (*e.g.*, film thickness) and the volatility of the target compounds, it may be necessary to cool the GC oven to subambient temperatures (*e.g.*, −50 °C) at the start of the run to allow resolution of very volatile organic compounds.

6.8.2 All carrier gas lines supplying the GC must be constructed from clean stainless steel or copper tubing. Non-polytetrafluoroethylene thread sealants. Flow controllers, cylinder regulators, or other pneumatic components fitted with rubber components are not suitable.

### 6.9 Chromatographic Columns

High-resolution, fused silica or equivalent capillary columns that provide adequate separation of sample components to permit identification and quantitation of target compounds must be used.

NOTE: 100-percent methyl silicone or 5-percent phenyl, 95-percent methyl silicone fused silica capillary columns of 0.25- to 0.32-mm i.d. of varying lengths and with varying thicknesses of stationary phase have been used successfully for non-polar and moderately polar compounds. However, given the diversity of potential target lists, GC column choice is left to the operator, subject to the performance criteria of this method.

### 6.10 Mass Spectrometer

Linear quadrupole, magnetic sector, ion trap or time-of-flight mass spectrometers may be used provided they meet specified performance criteria. The mass detector must be capable of collecting data from 35 to 300 atomic mass units (amu) every 1 second or less, utilizing 70 volts (nominal) electron energy in the electron ionization mode, and producing a mass spectrum that meets all the instrument performance acceptance criteria in Section 9 when 50 ηg or less of p-bromofluorobenzene is analyzed.

## 7.0 Reagents and Standards

### 7.1 Sorbent Selection

7.1.1 Use commercially packed tubes meeting the requirements of this method or prepare tubes in the laboratory using sieved sorbents of particle size in the range 20 to 80 mesh that meet the retention and quality control requirements of this method.

7.1.2 This passive air monitoring method can be used without the evaluation specified in Addendum A if the type of tubes described in Section 6.1 are packed with 4–6 cm (typically 400–650 mg) of the sorbents listed in Table 12.1 and used for the respective target analytes.

NOTE: Although Carbopack™ X is the optimum sorbent choice for passive sampling of 1,3-butadiene, recovery of compounds with vapor pressure lower than benzene may be difficult to achieve without exceeding sorbent maximum temperature limitations (see Table 8.1). See ISO 16017–2:2003(E) or ASTM D6196–03 (Reapproved 2009) (both incorporated by reference—see §63.14) for more details on sorbent choice for air monitoring using passive sampling tubes.

7.1.3 If standard passive sampling tubes are packed with other sorbents or used for analytes other than those tabulated in Section 12.0, method performance and relevant uptake rates should be verified according to Addendum A to this method or by following the techniques described in one of the following national/international standard methods: ISO 16017–2:2003(E), ASTM D6196–03 (Reapproved 2009), or BS EN 14662–4:2005 (all incorporated by reference—see §63.14)—or reported in the peer-reviewed open literature. A summary table and the supporting evaluation data demonstrating the selected sorbent meets the requirements in Addendum A to this method must be submitted to the regulatory authority as part of a request to use an alternative sorbent.

7.1.4 Passive (diffusive) sampling and thermal desorption methods that have been evaluated at relatively high atmospheric concentrations (*i.e.*, mid-ppb to ppm) and published for use in workplace air and industrial/mobile source emissions testing (References 9–20) may be applied to this procedure. However, the validity of any shorter term uptake rates must be verified and adjusted if necessary for the longer monitoring periods required by this method by following procedures described in Addendum A to this method or those presented in national/international standard methods: ISO 16017–2:2003(E), ASTM D6196–03 (Reapproved 2009), or BS EN 14662–4:2005 (all incorporated by reference-see §63.14).

7.1.5 Suitable sorbents for passive sampling must have breakthrough volumes of at least 20 L (preferably >100 L) for the compounds of interest and must quantitatively release the analytes during desorption without exceeding maximum temperatures for the sorbent or instrumentation.

7.1.6 Repack/replace the sorbent tubes or demonstrate tube performance following the requirements in Addendum A to this method at least every 2 years or every 50 uses, whichever occurs first.

### 7.2 Gas Phase Standards

7.2.1 Static or dynamic standard atmospheres may be used to prepare calibration tubes and/or to validate passive sampling uptake rates and can be generated from pure chemicals or by diluting concentrated gas standards. The standard atmosphere must be stable at ambient pressure and accurate to ±10 percent of the target gas concentration. It must be possible to maintain standard atmosphere concentrations at the same or lower levels than the target compound concentration objectives of the test. Test atmospheres used for validation of uptake rates must also contain at least 35 percent relative humidity.

NOTE: Accurate, low-(ppb-) level gas-phase VOC standards are difficult to generate from pure materials and may be unstable depending on analyte polarity and volatility. Parallel monitoring of vapor concentrations with alternative methods, such as pumped sorbent tubes or sensitive/selective on-line detectors, may be necessary to minimize uncertainty. For these reasons, standard atmospheres are rarely used for routine calibration.

7.2.2 Concentrated, pressurized gas phase standards. Accurate (±5 percent or better), concentrated gas phase standards supplied in pressurized cylinders may also be used for calibration. The concentration of the standard should be such that a 0.5–5.0 mL volume contains approximately the same mass of analytes as will be collected from a typical air sample.

7.2.3 Follow manufacturer's guidelines concerning storage conditions and recertification of the concentrated gas phase standard. Gas standards must be recertified a minimum of once every 12 months.

### 7.3 Liquid Standards

Target analytes can also be introduced to the sampling end of sorbent tubes in the form of liquid calibration standards.

7.3.1 The concentration of liquid standards must be such that an injection of 0.5–2 µl of the solution introduces the same mass of target analyte that is expected to be collected during the passive air sampling period.

7.3.2 Solvent Selection. The solvent selected for the liquid standard must be pure (contaminants <10 percent of minimum analyte levels) and must not interfere chromatographically with the compounds of interest.

7.3.3 If liquid standards are sourced commercially, follow manufacturer's guidelines concerning storage conditions and shelf life of unopened and opened liquid stock standards.

NOTE: Commercial VOC standards are typically supplied in volatile or non-interfering solvents such as methanol.

7.3.4 Working standards must be stored at 6 °C or less and used or discarded within two weeks of preparation.

### 7.4 Gas Phase Internal Standards

7.4.1 Gas-phase deuterated or fluorinated organic compounds may be used as internal standards for MS-based systems.

7.4.2 Typical compounds include deuterated toluene, perfluorobenzene and perfluorotoluene.

7.4.3 Use multiple internal standards to cover the volatility range of the target analytes.

7.4.4 Gas-phase standards must be obtained in pressurized cylinders and containing vendor certified gas concentrations accurate to ±5 percent. The concentration should be such that the mass of internal standard components introduced is similar to those of the target analytes collected during field monitoring.

### 7.5 Preloaded Standard Tubes

Certified, preloaded standard tubes, accurate within ±5 percent for each analyte at the microgram level and ±10 percent at the nanogram level, are available commercially and may be used for auditing and quality control purposes. (See Section 9.5 for audit accuracy evaluation criteria.) Certified preloaded tubes may also be used for routine calibration.

NOTE: Proficiency testing schemes are also available for TD/GC/MS analysis of sorbent

tubes preloaded with common analytes such as benzene, toluene, and xylene.

### 7.6 Carrier Gases

Use inert, 99.999-percent or higher purity helium as carrier gas. Oxygen and organic filters must be installed in the carrier gas lines supplying the analytical system according to the manufacturer's instructions. Keep records of filter and oxygen scrubber replacement.

## 8.0 Sorbent Tube Handling (Before and After Sampling)

### 8.1 Sample Tube Conditioning

8.1.1 Sampling tubes must be conditioned using the apparatus described in Section 6.2.

8.1.2 New tubes should be conditioned for 2 hours to supplement the vendor's conditioning procedure. Recommended temperatures for tube conditioning are given in Table 8.1.

8.1.3 After conditioning, the blank must be verified on each new sorbent tube and on 10 percent of each batch of reconditioned tubes. See Section 9.0 for acceptance criteria.

Table 8.1—Example Sorbent Tube Conditioning Parameters

| Sampling sorbent | Maximum temperature (°C) | Conditioning temperature (°C) | Carrier gas flow rate |
|---|---|---|---|
| Carbotrap® C | >400 | 350 | 100 mL/min |
| Carbopack™ C | | | |
| Anasorb® GCB2 | | | |
| Carbograph™ 1 TD | | | |
| Carbotrap® | | | |
| Carbopack™ B | | | |
| Anasorb® GCB1 | | | |
| Tenax® TA | | | |
| Carbopack™ X | 350 | 330 | 100 mL/min |

### 8.2 Capping, Storage and Shipment of Conditioned Tubes

8.2.1 Conditioned tubes must be sealed using long-term storage caps (see Section 6.4) pushed fully down onto both ends of the PS sorbent tube, tightened by hand and then tighten an additional quarter turn using an appropriate tool.

8.2.2 The capped tubes must be kept in appropriate containers for storage and transportation (see Section 6.4.2). Containers of sorbent tubes may be stored and shipped at ambient temperature and must be kept in a clean environment.

8.2.3 You must keep batches of capped tubes in their shipping boxes or wrap them in uncoated aluminum foil before placing them in their storage container, especially before air freight, because the packaging helps hold caps in position if the tubes get very cold.

### 8.3 Calculating the Number of Tubes Required for a Monitoring Exercise

8.3.1 Follow guidance given in Method 325A to determine the number of tubes required for site monitoring.

8.3.2 The following additional samples will also be required: Laboratory blanks as specified in Section 9.1.2 (one per analytical sequence minimum), field blanks as specified in Section 9.3.2 (two per sampling period minimum), CCV tubes as specified in Section 10.9.4. (at least one per analysis sequence or every 24 hours), and duplicate samples as specified in Section 9.4 (at least one duplicate sample is required for every 10 sampling locations during each monitoring period).

### 8.4 Sample Collection

8.4.1 Allow the tubes to equilibrate with ambient temperature (approximately 30 minutes to 1 hour) at the monitoring location before removing them from their storage/shipping container for sample collection.

8.4.2 Tubes must be used for sampling within 30 days of conditioning (Reference 4).

8.4.3 During field monitoring, the long-term storage cap at the sampling end of the tube is replaced with a diffusion cap and the whole assembly is arranged vertically, with the sampling end pointing downward, under a protective hood or shield—See Section 6.1 of Method 325A for more details.

### 8.5 Sample Storage

8.5.1 After sampling, tubes must be immediately resealed with long-term storage caps and placed back inside the type of storage container described in Section 6.4.2.

8.5.2 Exposed tubes may not be placed in the same container as clean tubes. They should not be taken back out of the container until ready for analysis and after they have had time to equilibrate with ambient temperature in the laboratory.

8.5.3 Sampled tubes must be inspected before analysis to identify problems such as loose or missing caps, damaged tubes, tubes that appear to be leaking sorbent or container contamination. Any and all such problems must be documented together with the unique identification number of the tube or tubes concerned. Affected tubes must not be analyzed but must be set aside.

8.5.4 Intact tubes must be analyzed within 30 days of the end of sample collection (within one week for limonene, carene, bischloromethyl ether, labile sulfur or nitrogen-containing compounds, and other reactive VOCs).

NOTE: Ensure ambient temperatures stay below 23 °C during transportation and storage. Refrigeration is not normally required unless the samples contain reactive compounds or cannot be analyzed within 30 days. If refrigeration is used, the atmosphere inside the refrigerator must be clean and free of organic solvents.

## 9.0 QUALITY CONTROL

### 9.1 LABORATORY BLANK

The analytical system must be demonstrated to be contaminant free by performing a blank analysis at the beginning of each analytical sequence to demonstrate that the secondary trap and TD/GC/MS analytical equipment are free of any significant interferents.

9.1.1 Laboratory blank tubes must be prepared from tubes that are identical to those used for field sampling.

9.1.2 Analysis of at least one laboratory blank is required per analytical sequence. The laboratory blank must be stored in the laboratory under clean, controlled ambient temperature conditions.

9.1.3 Laboratory blank/artifact levels must meet the requirements of Section 9.2.2 (see also Table 17.1). If the laboratory blank does not meet requirements, stop and perform corrective actions and then re-analyze laboratory blank to ensure it meets requirements.

### 9.2 TUBE CONDITIONING

9.2.1 Conditioned tubes must be demonstrated to be free of contaminants and interference by running 10 percent of the blank tubes selected at random from each conditioned batch under standard sample analysis conditions (see Section 8.1).

9.2.2 Confirm that artifacts and background contamination are ≤ 0.2 ppbv or less than three times the detection limit of the procedure or less than 10 percent of the target compound(s) mass that would be collected if airborne concentrations were at the regulated limit value, whichever is larger. Only tubes that meet these criteria can be used for field monitoring, field or laboratory blanks, or for system calibration.

9.2.3 If unacceptable levels of VOCs are observed in the tube blanks, then the processes of tube conditioning and checking the blanks must be repeated.

### 9.3 FIELD BLANKS

9.3.1 Field blank tubes must be prepared from tubes that are identical to those used for field sampling—*i.e.*, they should be from the same batch, have a similar history, and be conditioned at the same time.

9.3.2 Field blanks must be shipped to the monitoring site with the sampling tubes and must be stored at the sampling location throughout the monitoring exercise. The field blanks must be installed under a protective hood/cover at the sampling location, but the long-term storage caps must remain in place throughout the monitoring period (see Method 325A). The field blanks are then shipped back to the laboratory in the same container as the sampled tubes. Collect at least two field blank samples per sampling period to ensure sample integrity associated with shipment, collection, and storage.

9.3.3 Field blanks must contain no greater than one-third of the measured target analyte or compliance limit for field samples (see Table 17.1). If either field blank fails, flag all data that do not meet this criterion with a note that the associated results are estimated and likely to be biased high due to field blank background.

### 9.4 DUPLICATE SAMPLES

Duplicate (co-located) samples collected must be analyzed and reported as part of method quality control. They are used to evaluate sampling and analysis precision. Relevant performance criteria are given in Section 9.9.

### 9.5 METHOD PERFORMANCE CRITERIA

Unless otherwise noted, monitoring method performance specifications must be demonstrated for the target compounds using the procedures described in Addendum A to this method and the statistical approach presented in Method 301.

### 9.6 METHOD DETECTION LIMIT

Determine the method detection limit under the analytical conditions selected (see Section 11.3) using the procedure in Section 15 of Method 301. The method detection limit is defined for each system by making seven replicate measurements of a concentration of the compound of interest within a factor of five of the detection limit. Compute the standard deviation for the seven replicate concentrations, and multiply this value by three. The results should demonstrate that the method is able to detect analytes such as benzene at concentrations as low as 50 ppt or 1/3rd (preferably 1/10th) of the lowest concentration of interest, whichever is larger.

NOTE: Determining the detection limit may be an iterative process as described in 40 CFR part 136, Appendix B.

9.7 ANALYTICAL BIAS

Analytical bias must be demonstrated to be within ±30 percent using Equation 9.1. Analytical bias must be demonstrated during initial setup of this method and as part of the CCV carried out with every sequence of 10 samples or less (see Section 9.14). Calibration standard tubes (see Section 10.0) may be used for this purpose.

$$Analytical\ Bias = \frac{(Spiked\ Value - Measured\ Value)}{Spiked\ Value} \times 100 \qquad \text{Eq. 9.1}$$

Eq. 9.1
Where:

Spiked Value = A known mass of VOCs added to the tube.

Measured Value = Mass determined from analysis of the tube.

9.8 ANALYTICAL PRECISION

Demonstrate an analytical precision within ±20 percent using Equation 9.2. Analytical precision must be demonstrated during initial setup of this method and at least once per year. Calibration standard tubes may be used (see Section 10.0) and data from CCV may also be applied for this purpose.

$$Analytical\ Precision = \frac{(|A1 - A2|)}{\overline{A}} \times 100 \qquad \text{Eq. 9.2}$$

Eq. 9.2
Where:

A1 = A measurement value taken from one spiked tube.

A2 = A measurement value taken from a second spiked tube.

$\overline{A}$ = The average of A1 and A2.

9.9 FIELD REPLICATE PRECISION

Use Equation 9.3 to determine and report replicate precision for duplicate field samples (see Section 9.4). The level of agreement between duplicate field samples is a measure of the precision achievable for the entire sampling and analysis procedure. Flag data sets for which the duplicate samples do not agree within 30 percent.

$$Field\ Precision = \frac{(|F1 - F2|)}{\overline{F}} \times 100 \qquad \text{Eq. 9.3}$$

Eq. 9.3
Where:

F1 = A measurement value (mass) taken from one of the two field replicate tubes used in sampling.

F2 = A measurement value (mass) taken from the second of two field replicate tubes used in sampling.

$\overline{F}$ = The average of F1 and F2.

9.10 DESORPTION EFFICIENCY AND COMPOUND RECOVERY

The efficiency of the thermal desorption method must be determined.

9.10.1 Quantitative (>95 percent) compound recovery must be demonstrated by repeat analyses on a same standard tube.

9.10.2 Compound recovery through the TD system can also be demonstrated by comparing the calibration check sample response factor obtained from direct GC injection of liquid standards with that obtained from thermal desorption analysis response factor

using the same column under identical conditions.

9.10.3 If the relative response factors obtained for one or more target compounds introduced to the column via thermal desorption fail to meet the criteria in Section 9.10.1, you must adjust the TD parameters to meet the criteria and repeat the experiment. Once the thermal desorption conditions have been optimized, you must repeat this test each time the analytical system is recalibrated to demonstrate continued method performance.

### 9.11 Audit Samples

Certified reference standard samples must be used to audit this procedure (if available). Accuracy within 30 percent must be demonstrated for relevant ambient air concentrations (0.5 to 25 ppb).

### 9.12 Mass Spectrometer Tuning Criteria

Tune the mass spectrometer (if used) according to manufacturer's specifications. Verify the instrument performance by analyzing a 50 ηg injection of bromofluorobenzene. Prior to the beginning of each analytical sequence or every 24 hours during continuous GC/MS operation for this method demonstrate that the bromofluorobenzene tuning performance criteria in Table 9.1 have been met.

TABLE 9.1—GC/MS TUNING CRITERIA [1]

| Target mass | Rel. to mass | Lower limit % | Upper limit % |
|---|---|---|---|
| 50 | 95 | 8 | 40 |
| 75 | 95 | 30 | 66 |
| 95 | 95 | 100 | 100 |
| 96 | 95 | 5 | 9 |
| 173 | 174 | 0 | 2 |
| 174 | 95 | 50 | 120 |
| 175 | 174 | 4 | 9 |
| 176 | 174 | 93 | 101 |
| 177 | 176 | 5 | 9 |

[1] All ion abundances must be normalized to m/z 95, the nominal base peak, even though the ion abundance of m/z 174 may be up to 120 percent that of m/z 95.

### 9.13 Routine CCV at the Start of a Sequence

Run CCV before each sequence of analyses and after every tenth sample to ensure that the previous multi-level calibration (see section 10.0) is still valid.

9.13.1 The sample concentration used for the CCV should be near the mid-point of the multi-level calibration range.

9.13.2 Quantitation software must be updated with response factors determined from the CCV standard. The percent deviation between the initial calibration and the CCV for all compounds must be within 30 percent.

### 9.14 CCV at the End of a Sequence

Run another CCV after running each sequence of samples. The initial CCV for a subsequent set of samples may be used as the final CCV for a previous analytical sequence, provided the same analytical method is used and the subsequent set of samples is analyzed immediately (within 4 hours) after the last CCV.

### 9.15 Additional Verification

Use a calibration check standard from a second, separate source to verify the original calibration at least once every three months.

### 9.16 Integration Method

Document the procedure used for integration of analytical data including field samples, calibration standards and blanks.

### 9.17 QC Records

Maintain all QC reports/records for each TD/GC/MS analytical system used for application of this method. Routine quality control requirements for this method are listed below and summarized in Table 17.1.

## 10.0 Calibration and Standardization

10.1 Calibrate the analytical system using standards covering the range of analyte masses expected from field samples.

10.2 Analytical results for field samples must fall within the calibrated range of the analytical system to be valid.

10.3 Calibration standard preparation must be fully traceable to primary standards of mass and/or volume, and/or be confirmed using an independent certified reference method.

10.3.1 Preparation of calibration standard tubes from standard atmospheres.

10.3.1.1 Subject to the requirements in Section 7.2.1, low-level standard atmospheres may be introduced to clean, conditioned sorbent tubes in order to produce calibration standards.

10.3.1.2 The standard atmosphere generator or system must be capable of producing sufficient flow at a constant rate to allow the required analyte mass to be introduced within a reasonable time frame and without affecting the concentration of the standard atmosphere itself.

10.3.1.3 The sampling manifold may be heated to minimize risk of condensation but the temperature of the gas delivered to the sorbent tubes may not exceed 100 °F.

10.3.1.4 The flow rates passed through the tube should be in the order of 50–100 mL/min and the volume of standard atmosphere sampled from the manifold or chamber must not exceed the breakthrough volume of the sorbent at the given temperature.

10.4 Preparation of calibration standard tubes from concentrated gas standards.

10.4.1 If a suitable concentrated gas standard (see Section 7.2.2) can be obtained, follow the manufacturer's recommendations relating to suitable storage conditions and product lifetime.

10.4.2 Introduce precise 0.5 to 500.0 mL aliquots of the standard to the sampling end of conditioned sorbent tubes in a 50–100 mL/min flow of pure carrier gas.

NOTE: This can be achieved by connecting the sampling end of the tube to an unheated GC injector (see Section 6.6) and introducing the aliquot of gas using a suitable gas syringe. Gas sample valves could alternatively be used to meter the standard gas volume.

10.4.3 Each sorbent tube should be left connected to the flow of gas for 2 minutes after standard introduction. As soon as each spiked tube is removed from the injection unit, seal it with long-term storage caps and place it in an appropriate tube storage/transportation container if it is not to be analyzed within 24 hours.

10.5 Preparation of calibration standard tubes from liquid standards.

10.5.1 Suitable standards are described in Section 7.3.

10.5.2 Introduce precise 0.5 to 2 µl aliquots of liquid standards to the sampling end of sorbent tubes in a flow (50–100 mL/min) of carrier gas using a precision syringe and an unheated injector (Section 6.5). The flow of gas should be sufficient to completely vaporize the liquid standard.

NOTE: If the analytes of interest are higher boiling than n-decane, reproducible analyte transfer to the sorbent bed is optimized by allowing the tip of the syringe to gently touch the sorbent retaining gauze at the sampling end of the tube.

10.5.3 Each sorbent tube is left connected to the flow of gas for 5 minutes after liquid standard introduction.

10.5.3.1 As soon as each spiked tube is removed from the injection unit, seal it with long-term storage caps and place it in an appropriate tube storage container if it is not to be analyzed within 24 hours.

NOTE: In cases where it is possible to selectively purge the solvent from the tube while all target analytes are quantitatively retained, a larger 2 µL injection may be made for optimum accuracy. However, if the solvent cannot be selectively purged and will be present during analysis, the injection volume should be as small as possible (*e.g.*, 0.5 µL) to minimize solvent interference.

NOTE: This standard preparation technique requires the entire liquid plug including the tip volume be brought into the syringe barrel. The volume in the barrel is recorded, the syringe is inserted into the septum of the spiking apparatus. The liquid is then quickly injected. Any remaining liquid in the syringe tip is brought back into the syringe barrel. The volume in the barrel is recorded and the amount spiked onto the tube is the difference between the before spiking volume and the after spiking volume. A bias occurs with this method when sample is drawn continuously up into the syringe to the specified volume and the calibration solution in the syringe tip is ignored.

10.6 Preparation of calibration standard tubes from multiple standards.

10.6.1 If it is not possible to prepare one standard containing all the compounds of interest (*e.g.*, because of chemical reactivity or the breadth of the volatility range), standard tubes can be prepared from multiple gas or liquid standards.

10.6.2 Follow the procedures described in Sections 10.4 and 10.5, respectively, for introducing each gas and/or liquid standard to the tube and load those containing the highest boiling compounds of interest first and the lightest species last.

10.7 Additional requirements for preparation of calibration tubes.

10.7.1 Storage of Calibration Standard Tubes

10.7.1.1 Seal tubes with long-term storage caps immediately after they have been disconnected from the standard loading manifold or injection apparatus.

10.7.1.2 Calibration standard tubes may be stored for no longer than 30 days and should be refrigerated if there is any risk of chemical interaction or degradation. Audit standards (see section 9.11) are exempt from this criteria and may be stored for the shelf-life specified on their certificates.

10.8 Keep records for calibration standard tubes to include the following:

10.8.1 The stock number of any commercial liquid or gas standards used.

10.8.2 A chromatogram of the most recent blank for each tube used as a calibration standard together with the associated analytical conditions and date of cleaning.

10.8.3 Date of standard loading.

10.8.4 List of standard components, approximate masses and associated confidence levels.

10.8.5 Example analysis of an identical standard with associated analytical conditions.

10.8.6 A brief description of the method used for standard preparation.

10.8.7 The standard's expiration date.

10.9 TD/GC/MS using standard tubes to calibrate system response.

10.9.1 Verify that the TD/GC/MS analytical system meets the instrument performance criteria given in Section 9.1.

10.9.2 The prepared calibration standard tubes must be analyzed using the analytical conditions applied to field samples (see Section 11.0) and must be selected to ensure quantitative transfer and adequate chromatographic resolution of target compounds, surrogates, and internal standards in order to enable reliable identification and quantitation of compounds of interest. The

analytical conditions should also be sufficiently stringent to prevent buildup of higher boiling, non-target contaminants that may be collected on the tubes during field monitoring.

10.9.3 Calibration range. Each TD/GC/MS system must be calibrated at five concentrations that span the monitoring range of interest before being used for sample analysis. This initial multi-level calibration determines instrument sensitivity under the analytical conditions selected and the linearity of GC/MS response for the target compounds. One of the calibration points must be within a factor of five of the detection limit for the compounds of interest.

10.9.4 One of the calibration points from the initial calibration curve must be at the same concentration as the daily CCV standard (*e.g.*, the mass collected when sampling air at typical concentrations).

10.9.5 Calibration frequency. Each GC/MS system must be recalibrated with a full 5-point calibration curve following corrective action (*e.g.*, ion source cleaning or repair, column replacement) or if the instrument fails the daily calibration acceptance criteria.

10.9.5.1 CCV checks must be carried out on a regular routine basis as described in Section 9.14.

10.9.5.2 Quantitation ions for the target compounds are shown in Table 10.1. Use the primary ion unless interferences are present, in which case you should use a secondary ion.

TABLE 10.1—CLEAN AIR ACT VOLATILE ORGANIC COMPOUNDS FOR PASSIVE SORBENT SAMPLING

| Compound | CAS No. | BP (°C) | Vapor pressure (mmHg)[a] | MW[b] | Characteristic ion(s) | |
|---|---|---|---|---|---|---|
| | | | | | Primary | Secondary |
| 1,1-Dichloroethene | 75–35–4 | 32 | 500 | 96.9 | 61 | 96 |
| 3-Chloropropene | 107–05–1 | 44.5 | 340 | 76.5 | 76 | 41, 39, 78 |
| 1,1,2-Trichloro-1,2,2-trifluoroethane-1,1-Dichloroethane | 75–34–3 | 57.0 | 230 | 99 | 63 | 65, 83, 85, 98, 100 |
| 1,2-Dichloroethane | 107–06–2 | 83.5 | 61.5 | 99 | 62 | 98 |
| 1,1,1-Trichloroethane | 71–55–6 | 74.1 | 100 | 133.4 | 97 | 99, 61 |
| Benzene | 71–43–2 | 80.1 | 76.0 | 78 | 78 | |
| Carbon tetrachloride | 56–23–5 | 76.7 | 90.0 | 153.8 | 117 | 119 |
| 1,2-Dichloropropane | 78–87–5 | 97.0 | 42.0 | 113 | 63 | 112 |
| Trichloroethene | 79–01–6 | 87.0 | 20.0 | 131.4 | 95 | 97, 130, 132 |
| 1,1,2-Trichloroethane | 79–00–5 | 114 | 19.0 | 133.4 | 83 | 97, 85 |
| Toluene | 108–88–3 | 111 | 22.0 | 92 | 92 | 91 |
| Tetrachloroethene | 127–18–4 | 121 | 14.0 | 165.8 | 164 | 129, 131, 166 |
| Chlorobenzene | 108–90–7 | 132 | 8.8 | 112.6 | 112 | 77, 114 |
| Ethylbenzene | 100–41–4 | 136 | 7.0 | 106 | 91 | 106 |
| m,p-Xylene | 108–38–3, 106–42–3 | 138 | 6.5 | 106.2 | 106 | 91 |
| Styrene | 100–42–5 | 145 | 6.6 | 104 | 104 | 78 |
| o-Xylene | 95–47–6 | 144 | 5.0 | 106.2 | 106 | 91 |
| p-Dichlorobenzene | 106–46–7 | 173 | 0.60 | 147 | 146 | 111, 148 |

[a] Pressure in millimeters of mercury.
[b] Molecular weight.

## 11.0 ANALYTICAL PROCEDURE

### 11.1 PREPARATION FOR SAMPLE ANALYSIS

11.1.1 Each sequence of analyses must be ordered as follows:

11.1.1.1 CCV.

11.1.1.2 A laboratory blank.

11.1.1.3 Field blank.

11.1.1.4 Sample(s).

11.1.1.5 Field blank.

11.1.1.6 CCV after 10 field samples.

11.1.1.7 CCV at the end of the sample batch.

### 11.2 PRE-DESORPTION SYSTEM CHECKS AND PROCEDURES

11.2.1 Ensure all sample tubes and field blanks are at ambient temperature before removing them from the storage container.

11.2.2 If using an automated TD/GC/MS analyzer, remove the long-term storage caps from the tubes, replace them with appropriate analytical caps, and load them into the system in the sequence described in Section 11.1. Alternatively, if using a manual system, uncap and analyze each tube, one at a time, in the sequence described in Section 11.1.

11.2.3 The following thermal desorption system integrity checks and procedures are required before each tube is analyzed.

NOTE: Commercial thermal desorbers should implement these steps automatically.

11.2.3.1 Tube leak test: Each tube must be leak tested as soon as it is loaded into the carrier gas flow path before analysis to ensure data integrity.

11.2.3.2 Conduct the leak test at the GC carrier gas pressure, without heat or gas flow applied. Tubes that fail the leak test should not be analyzed, but should be resealed and stored intact. On automated systems, the instrument should continue to leak test and analyze subsequent tubes after a given tube has failed. Automated systems must also store and record which tubes in a sequence have failed the leak test. Information on failed tubes should be downloaded with the batch of sequence information from the analytical system.

11.2.3.3 Leak test the sample flow path. Leak check the sample flow path of the thermal desorber before each analysis without heat or gas flow applied to the sample tube. Stop the automatic sequence of tube desorption and GC analysis if any leak is detected in the main sample flow path. This process may be carried out as a separate step or as part of Section 11.2.3.2.

11.2.4 OPTIONAL DRY PURGE

11.2.4.1 Tubes may be dry purged with a flow of pure dry gas passing into the tube from the sampling end, to remove water vapor and other very volatile interferents if required.

11.2.5 INTERNAL STANDARD (IS) ADDITION

11.2.5.1 Use the internal standard addition function of the automated thermal desorber (if available) to introduce a precise aliquot of the internal standard to the sampling end of each tube after the leak test and shortly before primary (tube) desorption).

NOTE: This step can be combined with dry purging the tube (Section 11.2.4) if required.

11.2.5.2 If the analyzer does not have a facility for automatic IS addition, gas or liquid internal standard can be manually introduced to the sampling end of tubes in a flow of carrier gas using the types of procedure described in Sections 10.3 and 10.4, respectively.

11.2.6 Pre-purge. Each tube should be purged to vent with carrier gas flowing in the desorption direction (*i.e.*, flowing into the tube from the non-sampling end) to remove oxygen before heat is applied. This is to prevent analyte and sorbent oxidation and to prevent deterioration of key analyzer components such as the GC column and mass spectrometer (if applicable). A series of schematics illustrating these steps is presented in Figures 17.2 and 17.3.

11.3 ANALYTICAL PROCEDURE

11.3.1 STEPS REQUIRED FOR THERMAL DESORPTION

11.3.1.1 Ensure that the pressure and purity of purge and carrier gases supplying the TD/GC/MS system, meet manufacturer specifications and the requirements of this method.

11.3.1.2 Ensure also that the analytical method selected meets the QC requirements of this method (Section 9) and that all the analytical parameters are at set point.

11.3.1.3 Conduct predesorption system checks (see Section 11.2).

11.3.1.4 Desorb the sorbent tube under conditions demonstrated to achieve >95 percent recovery of target compounds (see Section 9.5.2).

NOTE: Typical tube desorption conditions range from 280–350 °C for 5–15 minutes with a carrier gas flow of 30–100 mL/min passing through the tube from the non-sampling end such that analytes are flushed out of the tube from the sampling end. Desorbed VOCs are concentrated (refocused) on a secondary, cooled sorbent trap integrated into the analytical equipment (see Figure 17.4). The focusing trap is typically maintained at a temperature between −30 and +30 °C during focusing. Selection of hydrophobic sorbents for focusing and setting a trapping temperature of +25 to 27 °C aid analysis of humid samples because these settings allow selective elimination of any residual water from the system, prior to GC/MS analysis.

NOTE: The transfer of analytes from the tube to the focusing trap during primary (tube) desorption can be carried out splitless or under controlled split conditions (see Figure 17.4) depending on the masses of target compounds sampled and the requirements of the system—sensitivity, required calibration range, column overload limitations, etc. Instrument controlled sample splits must be demonstrated by showing the reproducibility using calibration standards. Field and laboratory blank samples must be analyzed at the same split as the lowest calibration standard. During secondary (trap) desorption the focusing trap is heated rapidly (typically at rates >40 °C/s) with inert (carrier) gas flowing through the trap (3–100 mL/min) in the reverse direction to that used during focusing.

11.3.1.5 The split conditions selected for optimum field sample analysis must also be demonstrated on representative standards.

NOTE: Typical trap desorption temperatures are in the range 250–360 °C, with a ''hold'' time of 1–3 minutes at the highest temperature. Trap desorption automatically triggers the start of GC analysis. The trap desorption can also be carried out under splitless conditions (*i.e.*, with everything desorbed from the trap being transferred to the analytical column and GC detector) or,

more commonly, under controlled split conditions (see Figure 17.4). The selected split ratio depends on the masses of target compounds sampled and the requirements of the system—sensitivity, required calibration range, column overload limitations, etc. If a split is selected during both primary (trap) desorption and secondary (trap) desorption, the overall split ratio is the product of the two. Such 'double' split capability gives optimum flexibility for accommodating concentrated samples as well as trace-level samples on the TD/GC/MS analytical system. High resolution capillary columns and most GC/MS detectors tend to work best with approximately 20–200 ng per compound per tube to avoid saturation. The overall split ratio must be adjusted such that, when it is applied to the sample mass that is expected to be collected during field monitoring, the amount reaching the column will be attenuated to fall within this range. As a rule of thumb this means that ~20 ng samples will require splitless or very low split analysis, ~2 µg samples will require a split ratio in the order of ~50:1 and 200 µg samples will require a double split method with an overall split ratio in the order of 2,000:1.

11.3.1.6 Analyzed tubes must be resealed with long-term storage caps immediately after analysis (manual systems) or after completion of a sequence (automated systems). This prevents contamination, minimizing the extent of tube reconditioning required before subsequent reuse.

### 11.3.2 GC/MS Analytical Procedure

11.3.2.1 Heat/cool the GC oven to its starting set point.

11.3.2.2 If using a GC/MS system, it can be operated in either MS-Scan or MS–SIM mode (depending on required sensitivity levels and the type of mass spectrometer selected). As soon as trap desorption and transfer of analytes into the GC column triggers the start of the GC/MS analysis, collect mass spectral data over a range of masses from 35 to 300 amu. Collect at least 10 data points per eluting chromatographic peak in order to adequately integrate and quantify target compounds.

11.3.2.3 Use secondary ion quantitation only when there are sample matrix interferences with the primary ion. If secondary ion quantitation is performed, flag the data and document the reasons for the alternative quantitation procedure.

11.3.2.4 Data reduction is performed by the instruments post processing program that is automatically accessed after data acquisition is completed at the end of the GC run. The concentration of each target compound is calculated using the previously established response factors for the CCV analyzed in Section 11.1.1.6.

11.3.2.5 Whenever the thermal desorption—GC/MS analytical method is changed or major equipment maintenance is performed, you must conduct a new five-level calibration (see section 10.0). System calibration remains valid as long as results from subsequent CCV are within 30 percent of the most recent 5-point calibration (see section 9.13). Include relevant CCV data in the supporting information in the data report for each set of samples.

11.3.2.6 Document, flag and explain all sample results that exceed the calibration range. Report flags and provide documentation in the analytical results for the affected sample(s).

## 12.0 Data Analysis, Calculations, and Reporting

### 12.1 Recordkeeping Procedures for Sorbent Tubes

12.1.1 Label sample tubes with a unique identification number as described in Section 6.3.

12.1.2 Keep records of the tube numbers and sorbent lots used for each sampling period.

12.1.3 Keep records of sorbent tube packing if tubes are manually prepared in the laboratory and not supplied commercially. These records must include the masses and/or bed lengths of sorbent(s) contained in each tube, the maximum allowable temperature for that tube and the date each tube was packed. If a tube is repacked at any stage, record the date of tube repacking and any other relevant information required in Section 12.1.

12.1.4 Keep records of the conditioning and blanking of tubes. These records must include, but are not limited to, the unique identification number and measured background resulting from the tube conditioning.

12.1.5 Record the location, dates, tube identification and times associated with each sample collection. Record this information on a Chain of Custody form that is sent to the analytical laboratory.

12.1.6 Field sampling personnel must complete and send a Chain of Custody to the analysis laboratory (see Section 8.6.4 of Method 325A for what information to include and Section 17.0 of this method for an example form). Duplicate copies of the Chain of Custody must be included with the sample report and stored with the field test data archive.

12.1.7 Field sampling personnel must also keep records of the unit vector wind direction, sigma theta, temperature and barometric pressure averages for the sampling period. See Section 8.3.4 of Method 325A.

12.1.8 Laboratory personnel must record the sample receipt date, and analysis date.

12.1.9 Laboratory personnel must maintain records of the analytical method and

sample results in electronic or hardcopy in sufficient detail to reconstruct the calibration, sample, and quality control results from each sampling period.

12.2 CALCULATIONS

12.2.1 Complete the calculations in this section to determine compliance with calibration quality control criteria (see also Table 17.1).

12.2.1.1 Response factor (RF). Calculate the RF using Equation 12.1:

$$RF = \frac{[A_s \times M_{is}]}{[A_{is} \times M_s]} \qquad \text{Eq. 12.1}$$

Where:

$A_s$ = Peak area for the characteristic ion of the analyte.

$A_{is}$ = Peak area for the characteristic ion of the internal standard.

$M_s$ = Mass of the analyte.

$M_{is}$ = Mass of the internal standard.

12.2.1.2 Standard deviation of the response factors ($SD_{RF}$). Calculate the SDRF using Equation 12.2:

$$SD_{RF} = \sqrt{\frac{\sum_{i=1}^{n}\left(RF_i - \overline{RF}\right)^2}{(n-1)}} \qquad \text{Eq. 12.2}$$

Where:

$RF_i$ = RF for each of the calibration compounds.

$\overline{RF}$ = Mean RF for each compound from the initial calibration.

n = Number of calibration standards.

12.2.1.3 Percent deviation (%DEV). Calculate the %DEV using Equation 12.3:

$$\%DEV = SD_{RF} \div \overline{RF} \times 100 \qquad \text{Eq. 12.3}$$

Where:

$SD_{RF}$ = Standard deviation.

$\overline{RF}$ = Mean RF for each compound from the initial calibration.

12.2.1.4 Relative percent difference (RPD). Calculate the RPD using Equation 12.4:

$$RPD = \frac{R1 - R2}{[(R1 + R2)/2]} \times 100 \qquad \text{Eq. 12.4}$$

Where:

R1, R2 = Values that are being compared (*i.e.*, response factors in CCV).

12.2.2 Determine the equivalent concentrations of compounds in atmospheres as follows. Correct target compound concentrations determined at the sampling site temperature and atmospheric pressure to standard conditions (25 °C and 760 mm mercury) using Equation 12.5.

$$C_c = \frac{(m_{meas}) * 10^6}{U_{NTP} * \left[\frac{t_{ss}}{298.15}\right]^{\frac{1}{2}} * t} \qquad \text{Eq. 12.5}$$

Where:

$m_{meas}$ = The mass of the compound as measured in the sorbent tube (µg).

t = The exposure time (minutes).

$t_{ss}$ = The average temperature during the collection period at the sampling site (K).

$U_{NTP}$ = The method defined diffusive uptake rate (sampling rate) (mL/min).

NOTE: Diffusive uptake rates ($U_{NTP}$) for common VOCs, using carbon sorbents packed into sorbent tubes of the dimensions specified in section 6.1, are listed in Table 12.1. Adjust analytical conditions to keep expected sampled masses within range (see sections 11.3.1.3 to 11.3.1.5). Best possible method detection limits are typically in the order of 0.1 ppb for 1,3-butadiene and 0.05 ppb for volatile aromatics such as benzene for 14-day monitoring. However, actual detection limits will depend upon the analytical conditions selected.

TABLE 12.1—VALIDATED SORBENTS AND UPTAKE RATES (mL/min) FOR SELECTED CLEAN AIR ACT COMPOUNDS

| Compound | Carbopack™ X[a] | Carbograph™1 TD | Carbopack™ B |
|---|---|---|---|
| 1,1-Dichloroethene | 0.57 ±0.14 | not available | not available. |
| 3-Chloropropene | 0.51 ±0.3 | not available | not available. |
| 1,1-Dichloroethane | 0.57 ±0.1 | not available | not available. |
| 1,2-Dichloroethane | 0.57 ±0.08 | not available | not available. |
| 1,1,1-Trichloroethane | 0.51 ±0.1 | not available | not available. |
| Benzene | 0.67 ±0.06 | 0.63 ±0.07[b] | 0.63 ±0.07[b]. |
| Carbon tetrachloride | 0.51 ±0.06 | not available | not available. |
| 1,2-Dichloropropane | 0.52 ±0.1 | not available | not available. |
| Trichloroethene | 0.5 ±0.05 | not available | not available. |
| 1,1,2-Trichloroethane | 0.49 ±0.13 | not available | not available. |
| Toluene | 0.52 ±0.14 | 0.56 ±0.06[c] | 0.56 ±0.06[c]. |
| Tetrachloroethene | 0.48 ±0.05 | not available | not available. |
| Chlorobenzene | 0.51 ±0.06 | not available | not available. |
| Ethylbenzene | 0.46 ±0.07 | not available | 0.50[c]. |
| m,p-Xylene | 0.46 ±0.09 | 0.47 ±0.04[c] | 0.47 ±0.04[c]. |
| Styrene | 0.5 ±0.14 | not available | not available. |
| o-Xylene | 0.46 ±0.12 | 0.47 ±0.04[c] | 0.47 ±0.04[c]. |
| p-Dichlorobenzene | 0.45 ±0.05 | not available | not available. |

[a] Reference 3, McClenny, J. Environ. Monit. 7:248–256. Based on 24-hour duration.
[b] Reference 24, BS EN 14662–4:2005 (incorporated by reference—see § 63.14). Based on 14-day duration.
[c] Reference 25, ISO 16017–2:2003(E) (incorporated by reference—see § 63.14). Based on 14-day duration.

## 13.0 METHOD PERFORMANCE

The performance of this procedure for VOC not listed in Table 12.1 is determined using the procedure in Addendum A of this Method or by one of the following national/international standard methods: ISO 16017–2:2003(E), ASTM D6196–03 (Reapproved 2009), or BS EN 14662–4:2005 (all incorporated by reference—see § 63.14).

13.1 The valid range for measurement of VOC is approximately 0.5 µg/m³ to 5 mg/m³ in air, collected over a 14-day sampling period. The upper limit of the useful range depends on the split ratio selected (Section 11.3.1) and the dynamic range of the analytical system. The lower limit of the useful range depends on the noise from the analytical instrument detector and on the blank level of target compounds or interfering compounds on the sorbent tube (see Section 13.3).

13.2 Diffusive sorbent tubes compatible with passive sampling and thermal desorption methods have been evaluated at relatively high atmospheric concentrations (*i.e.*, mid-ppb to ppm) and published for use in workplace air and industrial/mobile source emissions (References 15–16, 21–22).

13.3 Best possible detection limits and maximum quantifiable concentrations of air pollutants range from sub-part-per-trillion (sub-ppt) for halogenated species such as CCl4 and the freons using an electron capture detector (ECD), SIM Mode GC/MS, triple quad MS or GC/TOF MS to sub-ppb for volatile hydrocarbons collected over 72 hours followed by analysis using GC with quadrupole MS operated in the full SCAN mode.

13.3.1 Actual detection limits for atmospheric monitoring vary depending on several key factors. These factors are:

- Minimum artifact levels.

• GC detector selection.
• Time of exposure for passive sorbent tubes.
• Selected analytical conditions, particularly column resolution and split ratio.

## 14.0 Pollution Prevention

This method involves the use of ambient concentrations of gaseous compounds that post little or no danger of pollution to the environment.

## 15.0 Waste Management

Dispose of expired calibration solutions as hazardous materials. Exercise standard laboratory environmental practices to minimize the use and disposal of laboratory solvents.

## 16.0 References


1. Winberry, W. T. Jr., *et al.*, Determination of Volatile Organic Compounds in Ambient Air Using Active Sampling onto Sorbent Tubes: Method TO–17r, Second Edition, U.S. Environmental Protection Agency, Research Triangle Park, NC 27711, January 1999. *http://www.epa.gov/ttnamti1/airtox.html#compendium*
2. Ciccioli, P., Brancaleoni, E., Cecinato, A., Sparapini, R., and Frattoni, M., ''Identification and Determination of Biogenic and Anthropogenic VOCs in Forest Areas of Northern and Southern Europe and a Remote Site of the Himalaya Region by High-resolution GC–MS,'' J. of Chrom., 643, pp 55–69, 1993.
3. McClenny, W.A., K.D. Oliver, H.H. Jacumin, Jr., E.H. Daughtrey, Jr., D.A. Whitaker. 2005. 24 h diffusive sampling of toxic VOCs in air onto Carbopack™ X solid adsorbent followed by thermal desorption/GC/MS analysis—laboratory studies. J. Environ. Monit. 7:248–256.
4. Markes International (*www.markes.com/publications*): Thermal desorption Technical Support Note 2: Prediction of uptake rates for diffusive tubes.
5. Ciccioli, P., Brancaleoni, E., Cecinato, A., DiPalo, C., Brachetti, A., and Liberti, A., ''GC Evaluation of the Organic Components Present in the Atmosphere at Trace Levels with the Aid of Carbopack™ B for Preconcentration of the Sample,'' J. of Chrom., 351, pp 433–449, 1986.
6. Broadway, G. M., and Trewern, T., ''Design Considerations for the Optimization of a Packed Thermal Desorption Cold Trap for Capillary Gas Chromatography,'' Proc. 13th Int'l Symposium on Capil. Chrom., Baltimore, MD, pp 310–320, 1991.
7. Broadway, G. M., ''An Automated System for use Without Liquid Cryogen for the Determination of VOC's in Ambient Air,'' Proc. 14th Int'l. Symposium on Capil. Chrom., Baltimore, MD, 1992.
8. Gibitch, J., Ogle, L., and Radenheimer, P., ''Analysis of Ozone Precursor Compounds in Houston, Texas Using Automated Continuous GCs,'' in Proceedings of the Air and Waste Management Association Conference: Measurement of Toxic and Related Air Pollutants, Air and Waste Management Association, Pittsburgh, PA, May 1995.
9. Vandendriessche, S., and Griepink, B., ''The Certification of Benzene, Toluene and m-Xylene Sorbed on Tenax® TA in Tubes,'' CRM–112 CEC, BCR, EUR12308 EN, 1989.
10. MDHS 2 (Acrylonitrile in Air), ''Laboratory Method Using Porous Polymer Adsorption Tubes, and Thermal Desorption with Gas Chromatographic Analysis,'' Methods for the Determination of Hazardous Substances (MDHS), UK Health and Safety Executive, Sheffield, UK.
11. MDHS 22 (Benzene in Air), ''Laboratory Method Using Porous Polymer Adsorbent Tubes, Thermal Desorption and Gas Chromatography,'' Method for the Determination of Hazardous Substances (MDHS), UK Health and Safety Executive, Sheffield, UK.
12. MDHS 23 (Glycol Ether and Glycol Acetate Vapors in Air), ''Laboratory Method Using Tenax® Sorbent Tubes, Thermal Desorption and Gas Chromatography,'' Method for the Determination of Hazardous Substances (MDHS), UK Health and Safety Executive, Sheffield, UK.
13. MDHS 40 (Toluene in air), ''Laboratory Method Using Pumped Porous Polymer Adsorbent Tubes, Thermal Desorption and Gas Chromatography,'' Method for the Determination of Hazardous Substances (MDHS), UK Health and Safety Executive, Sheffield, UK.
14. MDHS 60 (Mixed Hydrocarbons (C to C) in Air), ''Laboratory Method Using Pumped Porous Polymer 3 10 and Carbon Sorbent Tubes, Thermal Desorption and Gas Chromatography,'' Method for the Determination of Hazardous Substances (MDHS), UK Health and Safety Executive, Sheffield, UK.
15. Price, J. A., and Saunders, K. J., ''Determination of Airborne Methyl tert-Butyl Ether in Gasoline Atmospheres,'' Analyst, Vol. 109, pp. 829–834, July 1984.
16. Coker, D. T., van den Hoed, N., Saunders, K. J., and Tindle, P. E., ''A Monitoring Method for Gasoline Vapour Giving Detailed Composition,'' Ann. Occup, Hyg., Vol 33, No. 11, pp 15–26, 1989.
17. DFG, ''Analytische Methoden zur prufing gesundheitsschadlicher Arbeistsstoffe,'' Deutsche Forschungsgemeinschaft, Verlag Chemie, Weinheim FRG, 1985.
18. NNI, ''Methods in NVN Series (Luchtkwaliteit; Werkplekatmasfeer),'' Nederlands Normailsatie—Institut, Delft, The Netherlands, 1986–88.

19. ''Sampling by Solid Adsorption Techniques,'' Standards Association of Australia Organic Vapours, Australian Standard 2976, 1987.
20. Woolfenden, E. A., ''Monitoring VOCs in Air Using Pumped Sampling onto Sorbent Tubes Followed by Thermal Desorption-capillary GC Analysis: Summary of Reported Data and Practical Guidelines for Successful Application,'' J. Air & Waste Manage. Assoc., Vol. 47, 1997, pp. 20–36.
21. Validation Guidelines for Air Sampling Methods Utilizing Chromatographic Analysis, OSHA T–005, Version 3.0, May 2010, *http://www.osha.gov/dts/sltc/methods/chromguide/chromguide.pdf*.
22. ASTM D4597–10, Standard Practice for Sampling Workplace Atmospheres to collect Gases or Vapors with Solid Sorbent Diffusive Samplers.
23. Martin, *http://www.hsl.gov.uk/media/1619/issue14.pdf*.
24. BS EN 14662–4:2005, Ambient air quality—Standard method for the measurement of benzene concentrations—Part 4: Diffusive sampling followed by thermal desorption and gas chromatography.
25. ISO 16017–2:2003(E): Indoor, ambient and workplace air—Sampling and analysis of volatile organic compounds by sorbent tube/thermal desorption/capillary gas chromatography—Part 2: Diffusive sampling.

## 17.0 Tables, Diagrams, Flowcharts and Validation Data≤

TABLE 17.1—SUMMARY OF GC/MS ANALYSIS QUALITY CONTROL PROCEDURES

| Parameter | Frequency | Acceptance criteria | Corrective action |
|---|---|---|---|
| Bromofluorobenzene Instrument Tune Performance Check. | Daily [a] prior to sample analysis. | Evaluation criteria presented in Section 9.5 and Table 9.2. | (1) Retune and or<br>(2) Perform Maintenance. |
| Five point calibration bracketing the expected sample concentration. | Following any major change, repair or maintenance or if daily CCV does not meet method requirements. Recalibration not to exceed three months. | (1) Percent Deviation (%DEV) of response factors ±30%.<br>(2) Relative Retention Times (RRTs) for target peaks ±0.06 units from mean RRT. | (1) Repeat calibration sample analysis.<br>(2) Repeat linearity check.<br>(3) Prepare new calibration standards as necessary and repeat analysis. |
| Calibration Verification (CCV Second source calibration verification check). | Following the calibration curve. | The response factor ±30% DEV from calibration curve average response factor. | (1) Repeat calibration check.<br>(2) Repeat calibration curve. |
| Laboratory Blank Analysis ..... | Daily [a] following bromofluoro benzene and calibration check; prior to sample analysis. | (1) ≤0.2 ppbv per analyte or ≤3 times the LOD, whichever is greater.<br>(2) Internal Standard (IS) area response ±40% and IS Retention Time (RT) ±0.33 min. of most recent calibration check. | (1) Repeat analysis with new blank tube.<br>(2) Check system for leaks, contamination.<br>(3) Analyze additional blank. |
| Blank Sorbent Tube Certification. | One tube analyzed for each batch of tubes cleaned or 10 percent of tubes whichever is greater. | <0.2 ppbv per VOC targeted compound or 3 times the LOD, whichever is greater. | Re-clean all tubes in batch and reanalyze. |
| Samples—Internal Standards .. | All samples ..... | IS area response ±40% and IS RT ±0.33 min. of most recent calibration validation. | Flag Data for possible invalidation. |
| Field Blanks ..... | Two per sampling period ..... | No greater than one-third of the measured target analyte or compliance limit. | Flag Data for possible invalidation due to high blank bias. |

[a] Every 24 hours.

**Method 325 A/B**

**EXAMPLE FIELD TEST DATA SHEET (FTDS)**
**AND**
**CHAIN OF CUSTODY**

**I. GENERAL INFORMATION**

SITE NAME:
_____
SITE LOCATION ADDRESS:
_____
CITY: _____STATE: _____ ZIP: _____

**II. SAMPLING DATA**

| Sample ID (Tube) # | Sorbent | Sample or blank | Start Date | Start Time | Stop Date | Stop Time | Location (gps) | Ambient Temp. (°F) | Barometric Pressure (in. Hg) |
|---|---|---|---|---|---|---|---|---|---|
| | | | | | | | | | |
| | | | | | | | | | |
| | | | | | | | | | |
| | | | | | | | | | |
| | | | | | | | | | |
| | | | | | | | | | |

**III. CUSTODY INFORMATION**

COLLECTED BY: _____
Relinquished to Shipper -
Name: _____ Date: _____ Time _____
Received by Laboratory -
Name _____ Date: _____ Time _____
Sample condition upon receipt:
_____
Analysis Required:
_____
_____
Comments:
_____
_____
_____

**Figure 17.1. Example Field Data From and Chain of Custody**

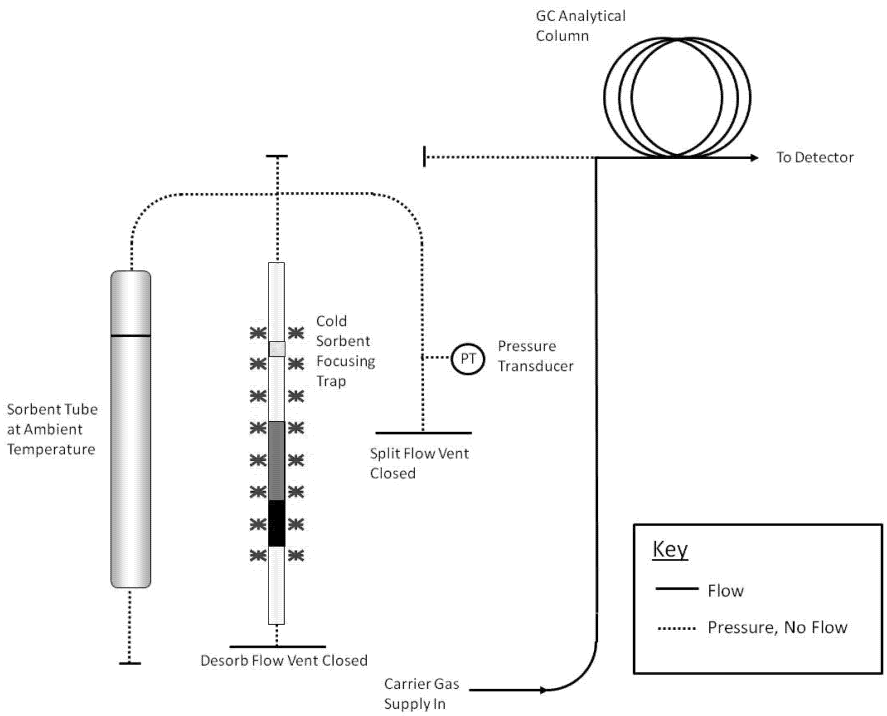


**Figure 17.2. Schematic of Thermal Desorption Flow Path During Leak Testing**

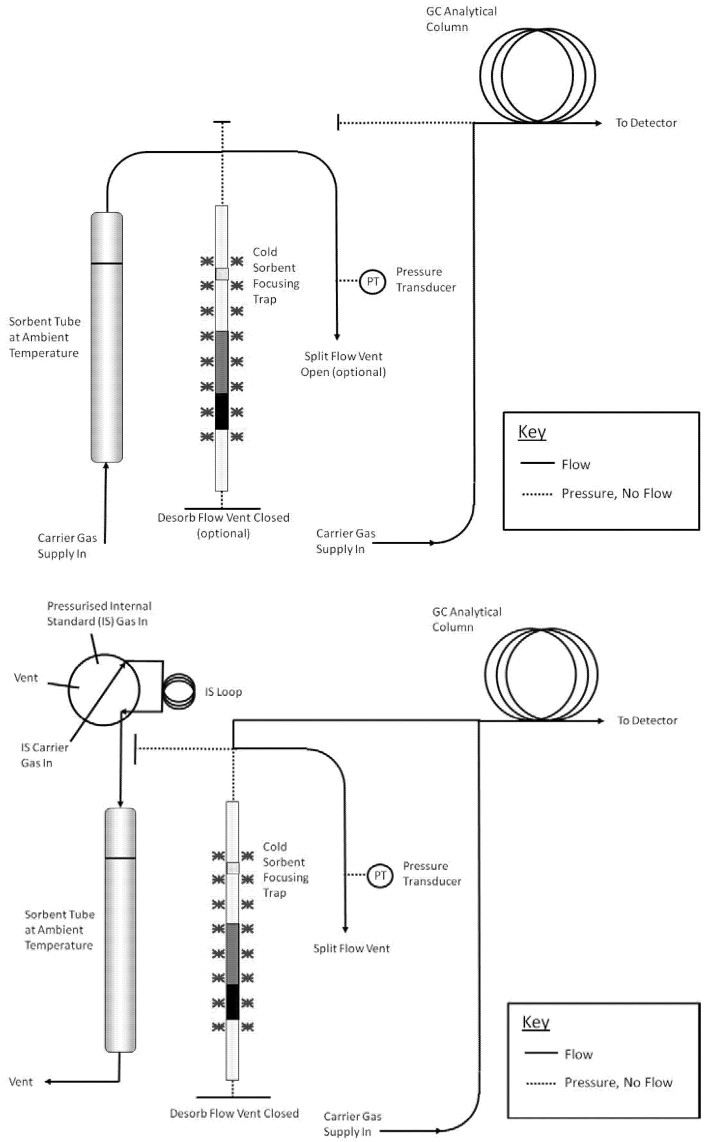


**Figure 17.3. Schematic of Thermal Desorption Flow During Purge of Air (Top) and Addition of IS Gas to the Sorbent Tube (Bottom)**

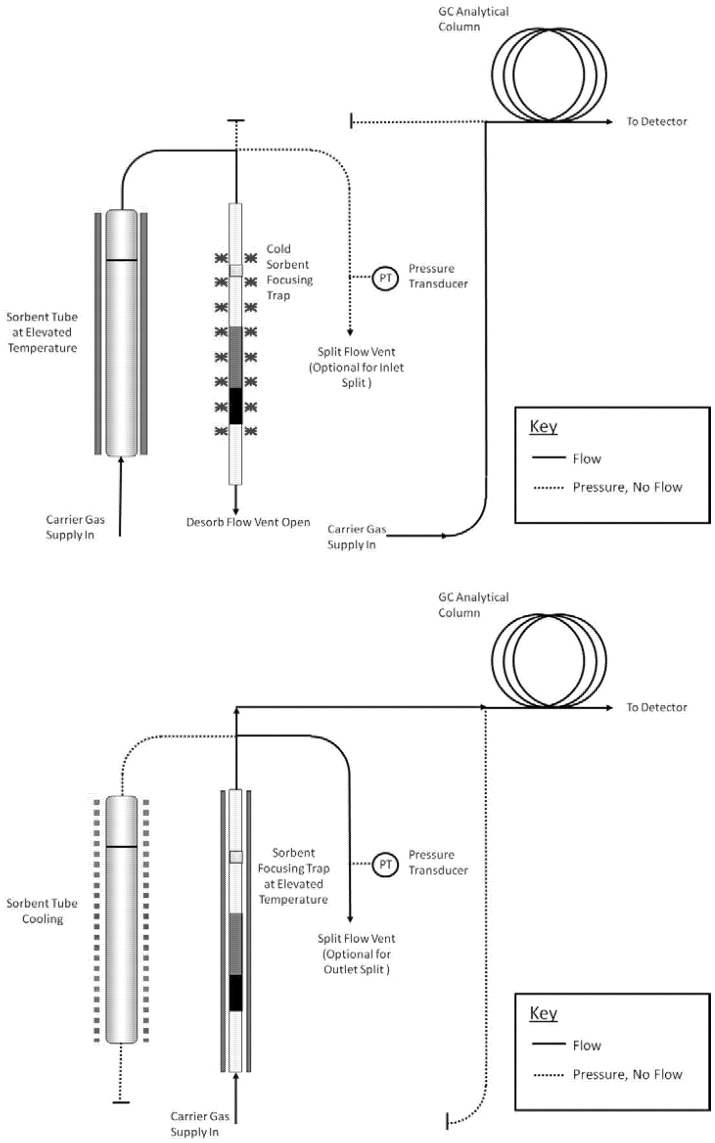


**Figure 17.4. Schematic of Thermal Desorption Flow Path During Primary (Tube) Desorption (Top) and Secondary (Trap) Desorption and Transfer to the GC (Bottom)**

ADDENDUM A to Method 325B—Method 325 Performance Evaluation

A.1 SCOPE AND APPLICATION

A.1.1 To be measured by Methods 325A and 325B, each new target volatile organic compound (VOC) or sorbent that is not listed

in Table 12.1 must be evaluated by exposing the selected sorbent tube to a known concentration of the target compound(s) in an exposure chamber following the procedure in this Addendum or by following the procedures in the national/international standard methods: ISO 16017–2:2003(E), ASTM D6196–03 (Reapproved 2009), or BS EN 14662–4:2005 (all incorporated by reference—see §63.14), or reported in peer-reviewed open literature.

A.1.2 You must determine the uptake rate and the relative standard deviation compared to the theoretical concentration of volatile material in the exposure chamber for each of the tests required in this method. If data that meet the requirement of this Addendum are available in the peer reviewed open literature for VOCs of interest collected on your passive sorbent tube configuration, then such data may be submitted in lieu of the testing required in this Addendum.

A.1.3 You must expose sorbent tubes in a test chamber to parts per trillion by volume (pptv) and low parts per billion by volume (ppbv) concentrations of VOCs in humid atmospheres to determine the sorbent tube uptake rate and to confirm compound capture and recovery.

### A.2 Summary of Method

NOTE: The technique described here is one approach for determining uptake rates for new sorbent/sorbate pairs. It is equally valid to follow the techniques described in any one of the following national/international standards methods: ISO 16017–2:2003(E), ASTM D6196–03 (Reapproved 2009), or BS EN 14662–4:2005 (all incorporated by reference—see §63.14).

A.2.1 Known concentrations of VOC are metered into an exposure chamber containing sorbent tubes filled with media selected to capture the volatile organic compounds of interest (see Figure A.1 and A.2 for an example of the exposure chamber and sorbent tube retaining rack). VOC are diluted with humid air and the chamber is allowed to equilibrate for 6 hours. Clean passive sampling devices are placed into the chamber and exposed for a measured period of time. The passive uptake rate of the passive sampling devices is determined using the standard and dilution gas flow rates. Chamber concentrations are confirmed with whole gas sample collection and analysis or direct interface volatile organic compound measurement methods.

A.2.2 An exposure chamber and known gas concentrations must be used to challenge and evaluate the collection and recovery of target compounds from the sorbent and tube selected to perform passive measurements of VOC in atmospheres.

### A.3 Definitions

A.3.1 *cc* is cubic centimeter.

A.3.2 *ECD* is electron capture detector.

A.3.3 *FID* is flame ionization detector.

A.3.4 *LED* is light-emitting diode.

A.3.5 *MFC* is mass flow controller.

A.3.6 *MFM* is mass flow meter.

A.3.7 *min* is minute.

A.3.8 *ppbv* is parts per billion by volume.

A.3.9 *ppmv* is parts per million by volume.

A.3.10 *PSD* is passive sampling device.

A.3.11 *psig* is pounds per square inch gauge.

A.3.12 *RH* is relative humidity.

A.3.13 *VOC* is volatile organic compound.

### A.4 Interferences

A.4.1 VOC contaminants in water can contribute interference or bias results high. Use only distilled, organic-free water for dilution gas humidification.

A.4.2 Solvents and other VOC-containing liquids can contaminate the exposure chamber. Store and use solvents and other VOC-containing liquids in the exhaust hood when exposure experiments are in progress to prevent the possibility of contamination of VOCs into the chamber through the chamber's exhaust vent.

NOTE: Whenever possible, passive sorbent evaluation should be performed in a VOC free laboratory.

A.4.3 PSDs should be handled by personnel wearing only clean, white cotton or powder free nitrile gloves to prevent contamination of the PSDs with oils from the hands.

A.4.4 This performance evaluation procedure is applicable to only volatile materials that can be measured accurately with direct interface gas chromatography or whole gas sample collection, concentration and analysis. Alternative methods to confirm the concentration of volatile materials in exposure chambers are subject to Administrator approval.

### A.5 Safety

A.5.1 This procedure does not address all of the safety concerns associated with its use. It is the responsibility of the user of this standard to establish appropriate field and laboratory safety and health practices and determine the applicability of regulatory limitations prior to use.

A.5.2 Laboratory analysts must exercise appropriate care in working with high-pressure gas cylinders.

### A.6 Equipment and Supplies

A.6.1 You must use an exposure chamber of sufficient size to simultaneously expose a minimum of eight sorbent tubes.

A.6.2 Your exposure chamber must not contain VOC that interfere with the compound under evaluation. Chambers made of glass and/or stainless steel have been used

successfully for measurement of known concentration of selected VOC compounds.

A.6.3 The following equipment and supplies are needed:

• Clean, white cotton or nitrile gloves;

• Conditioned passive sampling device tubes and diffusion caps; and

• NIST traceable high resolution digital gas mass flow meters (MFMs) or flow controllers (MFCs).

### A.7 Reagents and Standards

A.7.1 You must generate an exposure gas that contains between 35 and 75 percent relative humidity and a concentration of target compound(s) within 2 to 5 times the concentration to be measured in the field.

A.7.2 Target gas concentrations must be generated with certified gas standards and diluted with humid clean air. Dilution to reach the desired concentration must be done with zero grade air or better.

A.7.3 The following reagents and standards are needed:

• Distilled water for the humidification;

• VOC standards mixtures in high-pressure cylinder certified by the supplier (NOTE: The accuracy of the certified standards has a direct bearing on the accuracy of the measurement results. Typical vendor accuracy is ±5 percent accuracy but some VOC may only be available at lower accuracy (*e.g.*, acrolein at 10 percent)); and

• Purified dilution air containing less than 0.2 ppbv of the target VOC.

### A.8 Sample Collection, Preservation and Storage

A.8.1 You must use certified gas standards diluted with humid air. Generate humidified air by adding distilled organic free water to purified or zero grade air. Humidification may be accomplished by quantitative addition of water to the air dilution gas stream in a heated chamber or by passing purified air through a humidifying bubbler. You must control the relative humidity in the test gas throughout the period of passive sampler exposure.

NOTE: The RH in the exposure chamber is directly proportional to the fraction of the purified air that passes through the water in the bubbler before entering the exposure chamber. Achieving uniform humidification in the proper range is a trial-and-error process with a humidifying bubbler. You may need to heat the bubbler to achieve sufficient humidity. An equilibration period of approximately 15 minutes is required following each adjustment of the air flow through the humidifier. Several adjustments or equilibration cycles may be required to achieve the desired RH level.

NOTE: You will need to determine both the dilution rate and the humidification rate for your design of the exposure chamber by trial and error before performing method evaluation tests.

A.8.2 Prepare and condition sorbent tubes following the procedures in Method 325B Section 7.0.

A.8.3 You must verify that the exposure chamber does not leak.

A.8.4 You must complete two evaluation tests using a minimum of eight passive sampling tubes in each test with less than 5-percent depletion of test analyte by the samplers.

A.8.4.1 Perform at least one evaluation at two to five times the estimated analytical detection limit or less.

A.8.4.2 Perform second evaluation at a concentration equivalent to the middle of the analysis calibration range.

A.8.5 You must evaluate the samplers in the test chamber operating between 35 percent and 75 percent RH, and at 25 ±5 °C. Allow the exposure chamber to equilibrate for 6 hours before starting an evaluation.

A.8.6 The flow rate through the chamber must be ≤0.5 meter per second face velocity across the sampler face.

A.8.7 Place clean, ready to use sorbent tubes into the exposure chamber for predetermined amounts of time to evaluate collection and recovery from the tubes. The exposure time depends on the concentration of volatile test material in the chamber and the detection limit required for the sorbent tube sampling application. Exposure time should match sample collection time. The sorbent tube exposure chamber time may not be less than 24 hours and should not be longer than 2 weeks.

A.8.7.1 To start the exposure, place the clean PSDs equipped with diffusion caps on the tube inlet into a retaining rack.

A.8.7.2 Place the entire retaining rack inside the exposure chamber with the diffusive sampling end of the tubes facing into the chamber flow. Seal the chamber and record the exposure start time, chamber RH, chamber temperature, PSD types and numbers, orientation of PSDs, and volatile material mixture composition (see Figure A.2).

A.8.7.3 Diluted, humidified target gas must be continuously fed into the exposure chamber during cartridge exposure. Measure the flow rate of target compound standard gas and dilution air to an accuracy of 5 percent.

A.8.7.4 Record the time, temperature, and RH at the beginning, middle, and end of the exposure time.

A.8.7.5 At the end of the exposure time, remove the PSDs from the exposure chamber. Record the exposure end time, chamber RH, and temperature.

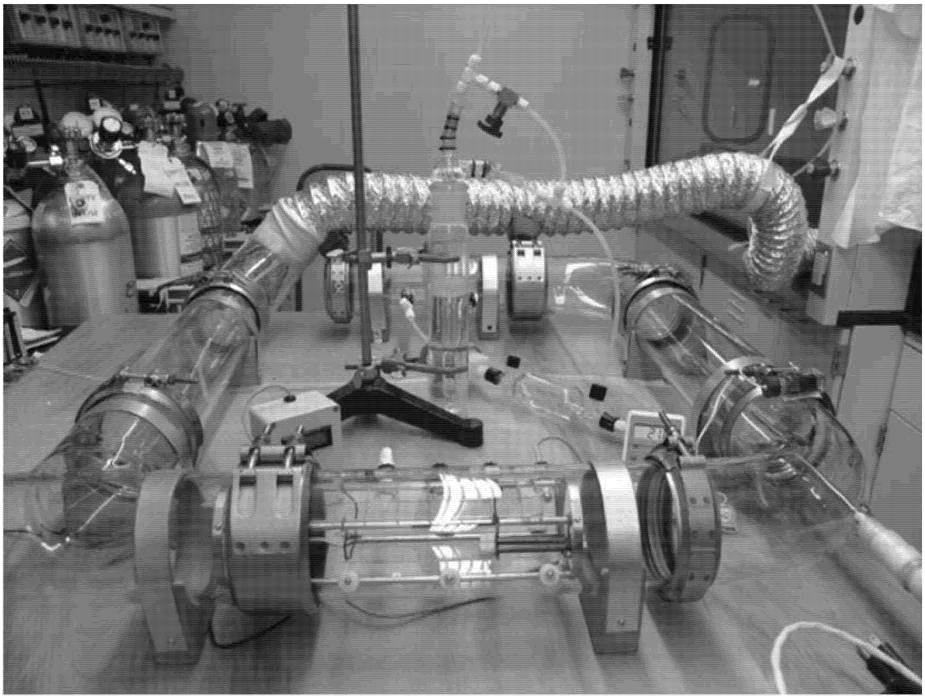

Figure A.1. Example Sorbent Tube Exposure Chamber

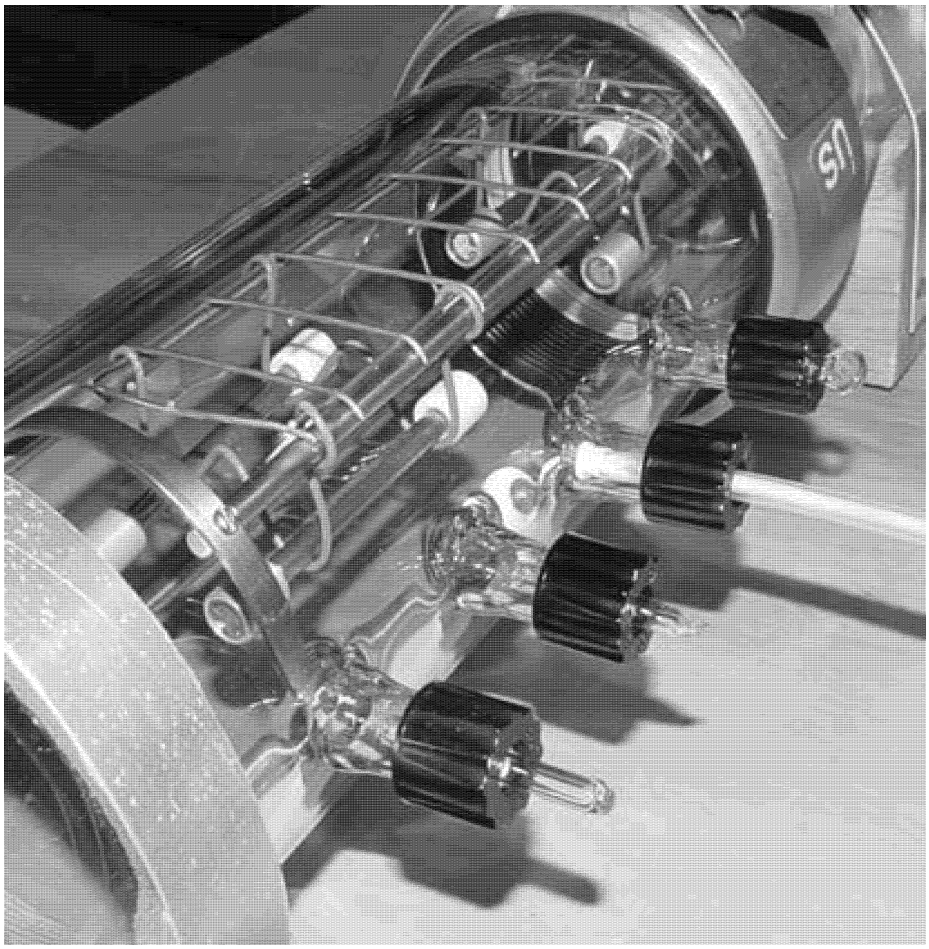

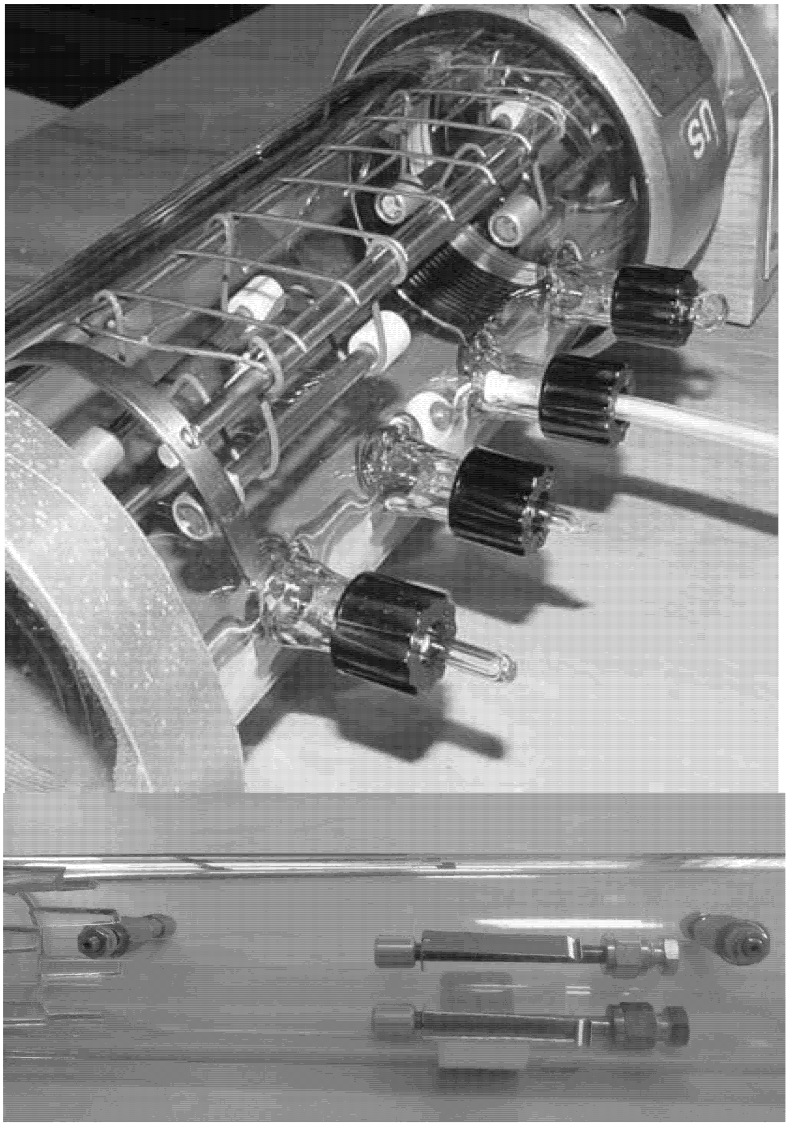

**Figure A.2. Example Tube Retaining Rack in Exposure Chamber**

A.9 QUALITY CONTROL

A.9.1 Monitor and record the exposure chamber temperature and RH during PSD exposures.

A.9.2 Measure the flow rates of standards and purified humified air immediately following PSD exposures.

A.10 CALIBRATION AND STANDARDIZATION

A.10.1 Follow the procedures described in Method 325B Section 10.0 for calibration.

A.10.2 Verify chamber concentration by direct injection into a gas chromatograph calibrated for the target compound(s) or by collection of an integrated SUMMA canister followed by analysis using a

preconcentration gas chromatographic method such as EPA Compendium Method TO–15, Determination of VOCs in Air Collected in Specially-Prepared Canisters and Analyzed By GC/MS.

A.10.2.1 To use direct injection gas chromatography to verify the exposure chamber concentration, follow the procedures in Method 18 of 40 CFR part 60, Appendix A–6. The method ASTM D6420–99 (Reapproved 2010) (incorporated by reference—see §63.14) is an acceptable alternative to EPA Method 18 of 40 CFR part 60).

NOTE: Direct injection gas chromatography may not be sufficiently sensitive for all compounds. Therefore, the whole gas preconcentration sample and analysis method may be required to measure at low concentrations.

A.10.2.2 To verify exposure chamber concentrations using SUMMA canisters, prepare clean canister(s) and measure the concentration of VOC collected in an integrated SUMMA canister over the period used for the evaluation (minimum 24 hours). Analyze the TO–15 canister sample following EPA Compendium Method TO–15.

A.10.2.3 Compare the theoretical concentration of volatile material added to the test chamber to the measured concentration to confirm the chamber operation. Theoretical concentration must agree with the measured concentration within 30 percent.

### A.11 ANALYSIS PROCEDURE

Analyze the sorbent tubes following the procedures described in Section 11.0 of Method 325B.

### A.12 RECORDKEEPING PROCEDURES FOR SORBENT TUBE EVALUATION

Keep records for the sorbent tube evaluation to include at a minimum the following information:

A.12.1 Sorbent tube description and specifications.

A.12.2 Sorbent material description and specifications.

A.12.3 Volatile analytes used in the sampler test.

A.12.4 Chamber conditions including flow rate, temperature, and relative humidity.

A.12.5 Relative standard deviation of the sampler results at the conditions tested.

A.12.6 95 percent confidence limit on the sampler overall accuracy.

A.12.7 The relative accuracy of the sorbent tube results compared to the direct chamber measurement by direct gas chromatography or SUMMA canister analysis.

### A.13 METHOD PERFORMANCE

A.13.1 Sorbent tube performance is acceptable if the relative accuracy of the passive sorbent sampler agrees with the active measurement method by ±10 percent at the 95 percent confidence limit and the uptake ratio is equal to greater than 0.5 mL/min (1 ng/ppm-min).

NOTE: For example, there is a maximum deviation comparing Perkin-Elmer passive type sorbent tubes packed with Carbopack™ X of 1.3 to 10 percent compared to active sampling using the following uptake rates.

| | 1,3-butadiene uptake rate mL/min | Estimated detection limit (2 week) | Benzene uptake rates mL/min | Estimated detection limit (2 week) |
|---|---|---|---|---|
| Carbopack™ X (2 week) | 0.61 ±0.11 [a] | 0.1 ppbv | 0.67 [a] | 0.05 ppbv |

[a] McClenny, W.A., K.D. Oliver, H.H. Jacumin, Jr., E.H. Daughtrey, Jr., D.A. Whitaker. 2005. 24 h diffusive sampling of toxic VOCs in air onto Carbopack™ X solid adsorbent followed by thermal desorption/GC/MS analysis—laboratory studies. J. Environ. Monit. 7:248–256.

A13.2 Data Analysis and Calculations for Method Evaluation

A.13.2.1 Calculate the theoretical concentration of VOC standards using Equation A.1.

$$C_f = \left[ \frac{FR_i}{FR_t + FR_a} \right] \times C_s \qquad \text{Eq. A.1}$$

Where:

$C_f$ = The final concentration of standard in the exposure chamber (ppbv).

$FR_i$ = The flow rate of the target compound I (mL/min).

$FR_t$ = The flow rate of all target compounds from separate if multiple cylinders are used (mL/min).

$FR_a$ = The flow rate of dilution air plus moisture (mL/min).

$C_s$ = The concentration of target compound in the standard cylinder (parts per million by volume).

A.13.2.3 Determine the uptake rate of the target gas being evaluated using Equation A.2.

$$U = \frac{M_x}{C_e \times T_t} \qquad \text{Eq. A.2}$$

Where:

$M_X$ = The mass of analyte measured on the sampling tube (ηg).

$C_e$ = The theoretical exposure chamber concentration (ηg/mL).

$T_t$ = The exposure time (minutes).

A.13.2.4 Estimate the variance (relative standard deviation (RSD)) of the inter-sampler results at each condition tested using Equation A.3. RSD for the sampler is estimated by pooling the variance estimates from each test run.

$$S^2 = \sum_i^n \frac{\left(X_i - \overline{X}\right)^2}{n-1} \qquad \text{Eq. A.3}$$

Where:

$X_i$ = The measured mass of analyte found on sorbent tube *i*.

$\overline{X}_i$ = The mean value of all $X_i$.

n = The number of measurements of the analyte.

A.13.2.4 Determine the percent relative standard deviation of the inter-sampler results using Equation A.4.

$$\%RSD_x = 100 \times \frac{\sqrt{S^2}}{\overline{X}} \qquad \text{Eq. A.4}$$

A.13.2.5 Determine the 95 percent confidence interval for the sampler results using Equation A.5. The confidence interval is determined based on the number of test runs performed to evaluate the sorbent tube and sorbent combination. For the minimum test requirement of eight samplers tested at two concentrations, the number of tests is 16 and the degrees of freedom are 15.

$$\Delta_{95\%} = \frac{\%RSD \times t_{0.95} \times f}{\sqrt{n}} \qquad \text{Eq. A.5}$$

Where:

$\Delta_{95\%}$ = 95 percent confidence interval.

%RSD = percent relative standard deviation.

$t_{0.95}$ = The Students t statistic for f degrees of freedom at 95 percent confidence.

f = The number of degrees of freedom.

n = Number of samples.

A.13.2.6 Determine the relative accuracy of the sorbent tube combination compared to the active sampling results using Equation A.6.

$$RA = \overline{X}_i - \overline{X}_A \pm \Delta_{95\%} \qquad \text{Eq. A.6}$$

Where:

RA = Relative accuracy.

$\overline{X}_i$ = The mean value of all $X_i$.

$\overline{X}_i$ = The average concentration of analyte measured by the active measurement method.

$\Delta_{95\%}$ = 95 percent confidence interval.

A.14 POLLUTION PREVENTION

This method involves the use of ambient concentrations of gaseous compounds that post little or no pollution to the environment.

A.15 WASTE MANAGEMENT

Expired calibration solutions should be disposed of as hazardous materials.

A.16 REFERENCES

1. ISO TC 146/SC 02 N 361 Workplace atmospheres—Protocol for evaluating the performance of diffusive samplers.

METHOD 326—METHOD FOR DETERMINATION OF ISOCYANATES IN STATIONARY SOURCE EMISSIONS

*1.0 Scope and Application*

This method is applicable to the collection and analysis of isocyanate compounds from the emissions associated with manufacturing processes. This method is not inclusive with respect to specifications (*e.g.*, equipment and supplies) and sampling procedures essential to its performance. Some material is incorporated by reference from other EPA methods. Therefore, to obtain reliable results, persons using this method should have a thorough knowledge of at least Method 1, Method 2, Method 3, and Method 5 found in Appendices A–1, A–2, and A–3 in Part 60 of this title.

1.1 Analytes. This method is designed to determine the mass emission of isocyanates being emitted from manufacturing processes. The following is a table (Table 1–1) of the isocyanates and the manufacturing process at which the method has been evaluated:

TABLE 326–1—ANALYTES

| Compound's name | CAS No. | Detection limit (ng/m³) [a] | Manufacturing process |
|---|---|---|---|
| 2,4-Toluene Diisocyanate (TDI) | 584–84–9 | 106 | Flexible Foam Production. |
| 1,6-Hexamethylene Diisocyanate (HDI) | 822–06–0 | 396 | Paint Spray Booth. |
| Methylene Diphenyl Diisocyanate (MDI) | 101–68–8 | 112 | Pressed Board Production. |
| Methyl Isocyanate (MI) | 624–83–0 | 228 | Not used in production. |

[a] Estimated detection limits are based on a sample volume of 1 m³ and a 10-ml sample extraction volume.

1.2 Applicability. Method 326 is a method designed for determining compliance with National Emission Standards for Hazardous Air Pollutants (NESHAP). Method 326 may also be specified by New Source Performance Standards (NSPS), State Implementation Plans (SIPs), and operating permits that require measurement of isocyanates in stationary source emissions, to determine compliance with an applicable emission standard or limit.

1.3 Data Quality Objectives (DQO). The principal objective is to ensure the accuracy of the data at the actual emissions levels and in the actual emissions matrix encountered. To meet this objective, method performance tests are required and NIST-traceable calibration standards must be used.

*2.0 Summary of Method*

2.1 Gaseous and/or aerosol isocyanates are withdrawn from an emission source at an isokinetic sampling rate and are collected in a multicomponent sampling train. The primary components of the train include a heated probe, three impingers containing derivatizing reagent in toluene, an empty impinger, an impinger containing charcoal, and an impinger containing silica gel.

2.2 The liquid impinger contents are recovered, concentrated to dryness under vacuum, brought to volume with acetonitrile (ACN) and analyzed with a high pressure liquid chromatograph (HPLC).

*3.0 Definitions [Reserved]*

*4.0 Interferences*

4.1 The greatest potential for interference comes from an impurity in the derivatizing reagent, 1-(2-pyridyl)piperazine (1,2-PP). This compound may interfere with the resolution of MI from the peak attributed to unreacted 1,2-PP.

4.2 Other interferences that could result in positive or negative bias are (1) alcohols

that could compete with the 1,2-PP for reaction with an isocyanate and (2) other compounds that may co-elute with one or more of the derivatized isocyanates.

4.3 Method interferences may be caused by contaminants in solvents, reagents, glassware, and other sample processing hardware. All these materials must be routinely shown to be free from interferences under conditions of the analysis by preparing and analyzing laboratory method (or reagent) blanks.

4.3.1 Glassware must be cleaned thoroughly before using. The glassware should be washed with laboratory detergent in hot water followed by rinsing with tap water and distilled water. The glassware may be dried by baking in a glassware oven at 400 °C for at least one hour. After the glassware has cooled, it should be rinsed three times with methylene chloride and three times with acetonitrile. Volumetric glassware should not be heated to 400 °C. Instead, after washing and rinsing, volumetric glassware may be rinsed with acetonitrile followed by methylene chloride and allowed to dry in air.

4.3.2 The use of high purity reagents and solvents helps to reduce interference problems in sample analysis.

*5.0 Safety*

5.1 Organizations performing this method are responsible for maintaining a current awareness file of Occupational Safety and Health Administration (OSHA) regulations regarding safe handling of the chemicals specified in this method. A reference file of material safety data sheets should also be made available to all personnel involved in performing the method. Additional references to laboratory safety are available.

*6.0 Equipment and Supplies*

6.1 Sample Collection. A schematic of the sampling train used in this method is shown in Figure 207–1. This sampling train configuration is adapted from Method 5 procedures, and, as such, most of the required equipment is identical to that used in Method 5 determinations. The only new component required is a condenser.

6.1.1 Probe Nozzle. Borosilicate or quartz glass; constructed and calibrated according to Method 5, sections 6.1.1.1 and 10.1, and coupled to the probe liner using a Teflon union; a stainless steel nut is recommended for this union. When the stack temperature exceeds 210 °C (410 °F), a one-piece glass nozzle/liner assembly must be used.

6.1.2 Probe Liner. Same as Method 5, section 6.1.1.2, except metal liners shall not be used. Water-cooling of the stainless steel sheath is recommended at temperatures exceeding 500 °C (932 °F). Teflon may be used in limited applications where the minimum stack temperature exceeds 120 °C (250 °F) but never exceeds the temperature where Teflon is estimated to become unstable [approximately 210 °C (410 °F)].

6.1.3 Pitot Tube, Differential Pressure Gauge, Filter Heating System, Metering System, Barometer, Gas Density Determination Equipment. Same as Method 5, sections 6.1.1.3, 6.1.1.4, 6.1.1.6, 6.1.1.9, 6.1.2, and 6.1.3.

6.1.4 Impinger Train. Glass impingers are connected in series with leak-free ground-glass joints following immediately after the heated probe. The first impinger shall be of the Greenburg-Smith design with the standard tip. The remaining five impingers shall be of the modified Greenburg-Smith design, modified by replacing the tip with a 1.3-cm (½-in.) I.D. glass tube extending about 1.3 cm (½ in.) from the bottom of the outer cylinder. A water-jacketed condenser is placed between the outlet of the first impinger and the inlet to the second impinger to reduce the evaporation of toluene from the first impinger.

6.1.5 Moisture Measurement. For the purpose of calculating volumetric flow rate and isokinetic sampling, you must also collect either Method 4 in Appendix A–3 to this part or other moisture measurement methods approved by the Administrator concurrent with each Method 326 test run.

6.2 Sample Recovery

6.2.1 Probe and Nozzle Brushes; Polytetrafluoroethylene (PTFE) bristle brushes with stainless steel wire or PTFE handles are required. The probe brush shall have extensions constructed of stainless steel, PTFE, or inert material at least as long as the probe. The brushes shall be properly sized and shaped to brush out the probe liner and the probe nozzle.

6.2.2 Wash Bottles. Three. PTFE or glass wash bottles are recommended; polyethylene wash bottles must not be used because organic contaminants may be extracted by exposure to organic solvents used for sample recovery.

6.2.3 Glass Sample Storage Containers. Chemically resistant, borosilicate amber glass bottles, 500-mL or 1,000-mL. Bottles should be tinted to prevent the action of light on the sample. Screw-cap liners shall be either PTFE or constructed to be leak-free and resistant to chemical attack by organic recovery solvents. Narrow-mouth glass bottles have been found to leak less frequently.

6.2.4 Graduated Cylinder. To measure impinger contents to the nearest 1 ml or 1 g. Graduated cylinders shall have subdivisions not >2 mL.

6.2.5 Plastic Storage Containers. Screw-cap polypropylene or polyethylene containers to store silica gel and charcoal.

6.2.6 Funnel and Rubber Policeman. To aid in transfer of silica gel or charcoal to container (not necessary if silica gel is weighed in field).

6.2.7 Funnels. Glass, to aid in sample recovery.

6.3 Sample Preparation and Analysis.

The following items are required for sample analysis.

6.3.1 Rotary Evaporator. Buchii Model EL–130 or equivalent.

6.3.2 1000 ml Round Bottom Flask for use with a rotary evaporator.

6.3.3 Separatory Funnel. 500-ml or larger, with PTFE stopcock.

6.3.4 Glass Funnel. Short-stemmed or equivalent.

6.3.5 Vials. 15-ml capacity with PTFE lined caps.

6.3.6 Class A Volumetric Flasks. 10-ml for bringing samples to volume after concentration.

6.3.7 Filter Paper. Qualitative grade or equivalent.

6.3.8 Buchner Funnel. Porcelain with 100 mm ID or equivalent.

6.3.9 Erlenmeyer Flask. 500-ml with side arm and vacuum source.

6.3.10 HPLC with at least a binary pumping system capable of a programmed gradient.

6.3.11 Column Systems Column systems used to measure isocyanates must be capable of achieving separation of the target compounds from the nearest eluting compound or interferents with no more than 10 percent peak overlap.

6.3.12 Detector. UV detector at 254 nm. A fluorescence detector (FD) with an excitation of 240 nm and an emission at 370 nm may be also used to allow the detection of low concentrations of isocyanates in samples.

6.3.13 Data system for measuring peak areas and retention times.

*7.0 Reagents and Standards*

7.1 Sample Collection Reagents.

7.1.1 Charcoal. Activated, 6–16 mesh. Used to absorb toluene vapors and prevent them from entering the metering device. Use once with each train and discard.

7.1.2 Silica Gel and Crushed Ice. Same as Method 5, sections 7.1.2 and 7.1.4 respectively

7.1.3 Impinger Solution. The impinger solution is prepared by mixing a known amount of 1-(2-pyridyl) piperazine (purity 99.5+%) in toluene (HPLC grade or equivalent). The actual concentration of 1,2-PP should be approximately four times the amount needed to ensure that the capacity of the derivatizing solution is not exceeded. This amount shall be calculated from the stoichiometric relationship between 1,2-PP and the isocyanate of interest and preliminary information about the concentration of the isocyanate in the stack emissions. A concentration of 130 μg/ml of 1,2-PP in toluene can be used as a reference point. This solution shall be prepared, stored in a refrigerated area away from light, and used within ten days of preparation.

7.2 Sample Recovery Reagents.

7.2.1 Toluene. HPLC grade is required for sample recovery and cleanup (see NOTE to 7.2.2 below).

7.2.2 Acetonitrile. HPLC grade is required for sample recovery and cleanup. NOTE: Organic solvents stored in metal containers may have a high residue blank and should not be used. Sometimes suppliers transfer solvents from metal to glass bottles; thus blanks shall be run before field use and only solvents with a low blank value should be used.

7.3 Analysis Reagents. Reagent grade chemicals should be used in all tests. All reagents shall conform to the specifications of the Committee on Analytical Reagents of the American Chemical Society, where such specifications are available.

7.3.1 Toluene, $C_6H_5CH_3$. HPLC Grade or equivalent.

7.3.2 Acetonitrile, $CH_3CN$ (ACN). HPLC Grade or equivalent.

7.3.3 Methylene Chloride, $CH_2Cl_2$. HPLC Grade or equivalent.

7.3.4 Hexane, $C_6H_{14}$. HPLC Grade or equivalent.

7.3.5 Water, $H_2O$. HPLC Grade or equivalent.

7.3.6 Ammonium Acetate, $CH_3CO_2NH_4$.

7.3.7 Acetic Acid (glacial), $CH_3CO_2H$.

7.3.8 1-(2-Pyridyl)piperazine, (1,2-PP), ≥99.5% or equivalent.

7.3.9 Absorption Solution. Prepare a solution of 1-(2-pyridyl)piperazine in toluene at a concentration of 40 mg/300 ml. This solution is used for method blanks and method spikes.

7.3.10 Ammonium Acetate Buffer Solution (AAB). Prepare a solution of ammonium acetate in water at a concentration of 0.1 M by transferring 7.705 g of ammonium acetate to a 1,000 ml volumetric flask and diluting to volume with HPLC Grade water. Adjust pH to 6.2 with glacial acetic acid.

*8.0 Sample Collection, Storage and Transport*

NOTE: Because of the complexity of this method, field personnel should be trained in and experienced with the test procedures in order to obtain reliable results.

8.1 Sampling

8.1.1 Preliminary Field Determinations. Same as Method 5, section 8.2.

8.1.2 Preparation of Sampling Train. Follow the general procedure given in Method 5, section 8.3.1, except for the following variations: Place 300 ml of the impinger absorbing solution in the first impinger and 200 ml each in the second and third impingers. The fourth impinger shall remain empty. The fifth and sixth impingers shall have 400 g of charcoal and 200–300 g of silica gel, respectively. Alternatively, the charcoal and silica gel may be combined in the fifth impinger.

Set-up the train as in Figure 326–1. During assembly, do not use any silicone grease on ground-glass joints.

NOTE: During preparation and assembly of the sampling train, keep all openings where contamination can occur covered with PTFE film or aluminum foil until just before assembly or until sampling is about to begin.

8.1.3 Leak-Check Procedures. Follow the leak-check procedures given in Method 5, sections 8.4.2 (Pretest Leak-Check), 8.4.3 (Leak-Checks During the Sample Run), and 8.4.4 (Post-Test Leak-Check), with the exception that the pre-test leak-check is mandatory

8.1.4 Sampling Train Operation. Follow the general procedures given in Method 5, section 8.5. Turn on the condenser coil coolant recirculating pump and monitor the gas entry temperature. Ensure proper gas entry temperature before proceeding and again before any sampling is initiated. It is important that the gas entry temperature not exceed 50 °C (122 °F), thus reducing the loss of toluene from the first impinger. For each run, record the data required on a data sheet such as the one shown in Method 5, Figure 5–3.

8.2 Sample Recovery. Allow the probe to cool. When the probe can be handled safely, wipe off all external particulate matter near the tip of the probe nozzle and place a cap over the tip to prevent losing or gaining particulate matter. Do not cap the probe tip tightly while the sampling train is cooling down because this will create a vacuum in the train. Before moving the sample train to the cleanup site, remove the probe from the sample train and cap the opening to the probe, being careful not to lose any condensate that might be present. Cap the impingers and transfer the probe and the impinger/condenser assembly to the cleanup area. This area should be clean and protected from the weather to reduce sample contamination or loss. Inspect the train prior to and during disassembly and record any abnormal conditions. It is not necessary to measure the volume of the impingers for the purpose of moisture determination as the method is not validated for moisture determination. Treat samples as follows:

8.2.1 Container No. 1, Probe and Impinger Numbers 1 and 2. Rinse and brush the probe/nozzle first with toluene twice and then twice again with acetonitrile and place the wash into a glass container labeled with the test run identification and ''Container No. 1.'' When using these solvents ensure that proper ventilation is available. Quantitatively transfer the liquid from the first two impingers and the condenser into Container No. 1. Rinse the impingers and all connecting glassware twice with toluene and then twice again with acetonitrile and transfer the rinses into Container No. 1. After all components have been collected in the container, seal the container, and mark the liquid level on the bottle.

8.2.2 Container No. 2, Impingers 3 and 4. Quantitatively transfer the liquid from each impinger into a glass container labeled with the test run identification and ''Container No. 2.'' Rinse each impinger and all connecting glassware twice with toluene and twice again with acetonitrile and transfer the rinses into Container No. 2. After all components have been collected in the container, seal the container, and mark the liquid level on the bottle.

NOTE: The contents of the fifth and sixth impinger (silica gel) can be discarded.

8.2.3 Container No. 3, Reagent Blank. Save a portion of both washing solutions (toluene/acetonitrile) used for the cleanup as a blank. Transfer 200 ml of each solution directly from the wash bottle being used and combine in a glass sample container with the test identification and ''Container No. 3.'' Seal the container, and mark the liquid level on the bottle and add the proper label.

8.2.4 Field Train Proof Blanks. To demonstrate the cleanliness of sampling train glassware, you must prepare a full sampling train to serve as a field train proof blank just as it would be prepared for sampling. At a minimum, one complete sampling train will be assembled in the field staging area, taken to the sampling area, and leak-checked. The probe of the blank train shall be heated during and the train will be recovered as if it were an actual test sample. No gaseous sample will be passed through the sampling train. Field blanks are recovered in the same manner as described in sections 8.2.1 and 8.2.2 and must be submitted with the field samples collected at each sampling site.

8.2.5 Field Train Spike. To demonstrate the effectiveness of the sampling train, field handling, and recovery procedures you must prepare a full sampling train to serve as a field train spike just as it would be prepared for sampling. The field spike is performed in the same manner as the field train proof blank with the additional step of adding the Field Spike Solution to the first impinger after the initial leak check. The train will be recovered as if it were an actual test sample. No gaseous sample will be passed through the sampling train. Field train spikes are recovered in the same manner as described in sections 8.2.1 and 8.2.2 and must be submitted with the samples collected for each test program.

8.3 Sample Transport Procedures. Containers must remain in an upright position at all times during shipment. Samples must also be stored at <4 °C between the time of sampling and concentration. Each sample should be extracted and concentrated within 30 days after collection and analyzed within 30 days after extraction. The extracted sample must be stored at 4 °C.

8.4 Sample Custody. Proper procedures and documentation for sample chain of custody are critical to ensuring data integrity. The chain of custody procedures in ASTM D4840–99 (Reapproved 2018)[e] ''Standard Guide for Sampling Chain-of-Custody Procedures'' (incorporated by reference, see §63.14) shall be followed for all samples (including field samples and blanks).

*9.0 Quality Control*

9.1 Sampling. Sampling Operations. The sampling quality control procedures and acceptance criteria are listed in Table 326–2 below; see also section 9.0 of Method 5.

9.2 Analysis. The analytical quality control procedures required for this method includes the analysis of the field train proof blank, field train spike, and reagent and method blanks. Analytical quality control procedures and acceptance criteria are listed in Table 326–3 below.

9.2.1 Check for Breakthrough. Recover and determine the isocyanate(s) concentration of the last two impingers separately from the first two impingers.

9.2.2 Field Train Proof Blank. Field blanks must be submitted with the samples collected at each sampling site.

9.2.3 Reagent Blank and Field Train Spike. At least one reagent blank and a field train spike must be submitted with the samples collected for each test program.

9.2.4 Determination of Method Detection Limit. Based on your instrument's sensitivity and linearity, determine the calibration concentrations or masses that make up a representative low level calibration range. The MDL must be determined at least annually for the analytical system using an MDL study such as that found in section 15.0 to Method 301 of appendix A to part 63 of this chapter.

TABLE 326–2—SAMPLING QUALITY ASSURANCE AND QUALITY CONTROL

| QA/QC criteria | Acceptance criteria | Frequency | Consequence if not met |
|---|---|---|---|
| Sampling Equipment Leak Checks | ≤0.00057 m3/min (0.020 cfm) or 4% of sampling rate, whichever is less. | Prior to, during (optional) and at the completion to sampling. | Prior to: Repair and repeat calibration. During/Completion: None, testing should be considered invalid. |
| Dry Gas Meter Calibration—Pre-Test (individual correction factor—$Y_i$). | within ±2% of average factor (individual) | Pre-test | Repeat calibration point. |
| Dry Gas Meter Calibration—Pre-Test (average correction factor—$Y_c$). | 1.00 ±1% | Pre-test | Adjust the dry gas meter and recalibrate. |
| Dry Gas Meter Calibration—Post-test | Average dry gas meter calibration factor agrees with ±5% $Y_c$. | Each Test | Adjust sample volumes using the factor that gives the smallest volume. |
| Temperature sensor calibration | Absolute temperature measures by sensor within ±1.5% of a reference sensor. | Prior to initial use and before each test thereafter. | Recalibrate; sensor may not be used until specification is met. |
| Barometer calibration | Absolute pressure measured by instrument within ±10 mm Hg of reading with a mercury barometer or NIST traceable barometer. | Prior to initial use and before each test thereafter. | Recalibrate; instrument may not be used until specification is met. |

TABLE 326–3—ANALYTICAL QUALITY ASSURANCE AND QUALITY CONTROL

| QA/QC criteria | Acceptance criteria | Frequency | Consequence if not met |
|---|---|---|---|
| Calibration—Method Blanks | <5% level of expected analyte | Each analytical method blank | Locate source of contamination; reanalyze. |
| Calibration—Calibration Points | At least six calibration point bracketing the expected range of analysis. | Each analytical batch | Incorporate additional calibration points to meet criteria. |
| Calibration—Linearity | Correlation coefficient >0.995 | Each analytical batch | Verify integration, reintegrate. If necessary, recalibrate. |
| Calibration—secondary standard verification. | Within ±10% of true value | After each calibration | Repeat secondary standard verification, recalibrate if necessary. |
| Calibration—continual calibration verification. | Within ±10% of true value | Daily and after every ten samples | Invalidate previous ten sample analysis, recalibrate and repeat calibration, reanalyze samples until successful. |
| Sample Analysis | Within the valid calibration range | Each sample | Invalidate the sample if greater than the calibration range and dilute the sample so that it is within the calibration range. Appropriately flag any value below the calibration range. |
| Replicate Samples | Within ±10% of RPD | Each sample | Evaluate integrations and repeat sample analysis as necessary. |
| Field Train Proof Blank | ≤10% level of expected analyte | Each test program | Evaluate source of contamination. |
| Field Train Spike | Within ±30% of true value | Each test program | Evaluate performance of the method and consider invalidating results. |
| Breakthrough | Final two impingers Mass collected is >5% of the total mass or >20% of the total mass when the measured results are 20% of the applicable standard. Alternatively, there is no breakthrough requirement when the measured results are 10% of the applicable standard. | Each test run | Invalidate test run. |

*10.0 Calibration and Standardization*

NOTE: Maintain a laboratory log of all calibrations.

10.1 Probe Nozzle, Pitot Tube Assembly, Dry Gas Metering System, Probe Heater, Temperature Sensors, Leak-Check of Metering System, and Barometer. Same as Method 5, sections 10.1, 10.2, 10.3, 10.4, 10.5, 8.4.1, and 10.6, respectively.

10.2 High Performance Liquid Chromatograph. Establish the retention times for the isocyanates of interest; retention times will depend on the chromatographic conditions. The retention times provided in Table 10–1 are provided as a guide to relative retention times when using a C18, 250 mm x 4.6 mm ID, 5μm particle size column, a 2 ml/min flow rate of a 1:9 to 6:4 Acetonitrile/Ammonium Acetate Buffer, a 50 μl sample loop, and a UV detector set at 254 nm.

TABLE 326–4—EXAMPLE RETENTION TIMES

| Retention times | |
|---|---|
| Compound | Retention time (minutes) |
| MI | 10.0 |
| 1,6-HDI | 19.9 |
| 2,4-TDI | 27.1 |
| MDI | 27.3 |

10.3 Preparation of Isocyanate Derivatives.

10.3.1 HDI, TDI, MDI. Dissolve 500 mg of each isocyanate in individual 100 ml aliquots of methylene chloride ($MeCl_2$), except MDI which requires 250 ml of $MeCl_2$. Transfer a 5-ml aliquot of 1,2-PP (see section 7.3.8) to each solution, stir and allow to stand overnight at room temperature. Transfer 150 ml aliquots of hexane to each solution to precipitate the isocyanate-urea derivative. Using a Buchner funnel, vacuum filter the solid-isocyanate-urea derivative and rinse with 50 ml of hexane. Dissolve the precipitate in a minimum aliquot of $MeCl_2$. Repeat the hexane precipitation and filtration twice. After the third filtration, dry the crystals at 50 °C and transfer to bottles for storage. The crystals are stable for at least 21 months when stored at room temperature in a closed container.

10.3.2 MI. Prepare a 200 μg/ml stock solution of methyl isocyanate-urea, transfer 60 mg of 1,2-PP to a 100-ml volumetric flask containing 50 ml of $MeCl_2$. Carefully transfer 20 mg of methyl isocyanate to the volumetric flask and shake for 2 minutes. Dilute the solution to volume with $MeCl_2$ and transfer to a bottle for storage. Methyl isocyanate does not produce a solid derivative and standards must be prepared from this stock solution.

10.4 Preparation of calibration standards. Prepare a 100 μg/ml stock solution of the isocyanates of interest from the individual isocyanate-urea derivative as prepared in sections 10.3.1 and 10.3.2. This is accomplished by dissolving 1 mg of each isocyanate-urea derivative in 10 ml of Acetonitrile. Calibration standards are prepared from this stock solution by making appropriate dilutions of aliquots of the stock into Acetonitrile.

10.5 Preparation of Method Blanks. Prepare a method blank for each test program (up to twenty samples) by transferring 300 ml of the absorption solution to a 1,000-ml round bottom flask and concentrate as outlined in section 11.2.

10.6 Preparation of Field Spike Solution. Prepare a field spike solution for every test program in the same manner as calibration standards (see Section 10.4). The mass of the target isocyanate in the volume of the spike solution for the field spike train shall be equivalent to that estimated to be captured from the source concentration for each compound; alternatively, you may also prepare a solution that represents half the applicable standard.

10.7 HPLC Calibrations. See Section 11.1.

*11.0 Analytical Procedure*

11.1 Analytical Calibration. Perform a multipoint calibration of the instrument at six or more upscale points over the desired quantitative range (multiple calibration ranges shall be calibrated, if necessary). The field samples analyzed must fall within at least one of the calibrated quantitative ranges and meet the performance criteria specified below. The lowest point in your calibration curve must be at least 5, and preferably 10, times the MDL. For each calibration curve, the value of the square of the linear correlation coefficient, *i.e.*, $r^2$, must be ≥0.995, and the analyzer response must be within ±10 percent of the reference value at each upscale calibration point. Calibrations must be performed on each day of the analysis, before analyzing any of the samples. Following calibration, a secondary standard shall be analyzed. A continual calibration verification (CCV) must also be performed prior to any sample and after every ten samples. The measured value of this independently prepared standard must be within ±10 percent of the expected value. Report the results for each calibration standard secondary standard, and CCV as well as the conditions of the HPLC. The reports should include at least the peak area, height, and retention time for each isocyanate compound measured as well as a chromatogram for each standard.

11.2 Concentration of Samples. Transfer each sample to a 1,000-ml round bottom flask. Attach the flask to a rotary evaporator and gently evaporate to dryness under vacuum in a 65 °C water bath. Rinse the round bottom flask three times each with 2

ml of acetonitrile and transfer the rinse to a 10-ml volumetric flask. Dilute the sample to volume with acetonitrile and transfer to a 15-ml vial and seal with a PTFE lined lid. Store the vial ≤4 °C until analysis.

11.3 Analysis. Analyze replicative samples by HPLC, using the appropriate conditions established in section 10.2. The width of the retention time window used to make identifications should be based upon measurements of actual retention time variations of standards over the course of a day. Three times the standard deviation of a retention time for a compound can be used to calculate a suggested window size; however, the experience of the analyst should weigh heavily in the interpretation of the chromatograms. If the peak area exceeds the linear range of the calibration curve, the sample must be diluted with acetonitrile and reanalyzed. Average the replicate results for each run. For each sample you must report the same information required for analytical calibrations (Section 11.1). For non-detect or values below the detection limit of the method, you shall report the value as ''<'' numerical detection limit.

*12.0 Data Analysis and Calculations*

Nomenclature and calculations, same as in Method 5, section 6, with the following additions below.

12.1 Nomenclature.

AS = Response of the sample, area counts.
b = Y-intercept of the linear regression line, area counts.
BR = Percent Breakthrough
$C_A$ = Concentration of a specific isocyanate compound in the initial sample, μg/ml.
$C_B$ = Concentration of a specific isocyanate compound in the replicate sample, μg/ml.
$C_I$ = Concentration of a specific isocyanate compound in the sample, μg/ml.
$C_{rec}$ = Concentration recovered from spike train, μg/ml.
$C_S$ = Concentration of isocyanate compound in the stack gas, μg/dscm
$C_T$ = Concentration of a specific isocyanate compound (Impingers 1–4), μg/dscm
$C_{spike}$ = Concentration spiked, μg/ml.
$C_4$ = Concentration of a specific isocyanate compound (Impingers 14), μg/dscm
$FI_m$ = Mass of Free Isocyanate
$FTS_{rec}$ = Field Train Spike Recovery
$I_m$ = Mass of the Isocyanate
$I_{mw}$ = MW of the Isocyanate
$IU_m$ = Mass of Isocyanate-urea derivative
$IU_{mw}$ = MW of the isocyanate-urea
M = Slope of the linear regression line, area counts-ml/μg.
$m_I$ = Mass of isocyanate in the total sample
MW = Molecular weight
RPD = Relative Percent Difference
VF = Final volume of concentrated sample, typically 10 ml.
$Vm_{std}$ = Volume of gas sample measured by the dry-gas meter, corrected to standard conditions, dscm (dscf).

12.2 Conversion from Isocyanate to the Isocyanate-urea derivative. The equation for converting the amount of free isocyanate to the corresponding amount of isocyanate-urea derivative is as follows:

12.2 Conversion from Isocyanate to the Isocyanate-urea derivative. The equation for converting the amount of free isocyante to the corresponding amount of isocyante-urea derivative is as follows:

$$IU_m = I_m \frac{IU_{mw}}{I_{mw}} \qquad \text{Eq. 326-1}$$

The equation for converting the amount of IU derivative to the corresponding amount of $FL_m$ is as follows:

$$I_m = IU_m \frac{I_{mw}}{IU_{mw}} \qquad \text{Eq. 326-2}$$

12.3 Calculate the correlation coefficient, slope, and intercepts for the calibration data using the least squares method for linear regression. Concentrations are expressed as the x-variable and response is expressed as the y-variable.

12.4 Calculate the concentration of isocyanate in the sample:

$$C_I = \frac{As - b}{M} \qquad \text{Eq. 326-3}$$

12.5 Calculate the total amount collected in the sample by multiplying the concentration (µg/ml) times the final volume of acetonitrile (10 ml).

$$m_I = CI \times V_f \qquad \text{Eq. 326-4}$$

12.6 Calculate the concentration of isocyanate (µg/dscm) in the stack gas.

$$C_s = \frac{M_I}{Vm_{std}} K \qquad \text{Eq. 326-5}$$

12.7 Calculate Relative Percent Difference (RPD) for each replicative sample

$$\%RPD = \left| \frac{(C_A - C_B)}{(C_A + C_B)/2} \right| x\ 100$$

Eq. 326-6

12.8 Calculate Field Train Spike Recovery

$$FTS_{rec} = \left[ \frac{C_{rec}}{C_{spike}} \right] \times 100$$

Eq. 326-7

12.9 Calculate Percent Breakthrough

$$BR = \left[ \frac{C_4}{C_T} \right] \times 100 \qquad \text{Eq. 326-8}$$

Where:

K = 35.314 $ft^3/m^3$ if Vm(std) is expressed in English units. = 1.00 $m^3/m^3$ if Vm(std) is expressed in metric units.

*13.0 Method Performance*

Evaluation of sampling and analytical procedures for a selected series of compounds must meet the quality control criteria (See Section 9) for each associated analytical determination. The sampling and analytical procedures must be challenged by the test compounds spiked at appropriate levels and carried through the procedures.

*14.0 Pollution Prevention [Reserved]*

*15.0 Waste Management [Reserved]*

*16.0 Alternative Procedures [Reserved]*

*17.0 References*

1. Martin, R.M., Construction Details of Isokinetic Source-Sampling Equipment, Research Triangle Park, NC, U.S. Environmental Protection Agency, April 1971, PB–203 060/BE, APTD–0581, 35 pp.
2. Rom, J.J., Maintenance, Calibration, and Operation of Isokinetic Source Sampling Equipment, Research Triangle Park, NC, U.S. Environmental Protection Agency, March 1972, PB–209 022/BE, APTD–0576, 39 pp.
3. Schlickenrieder, L.M., Adams, J.W., and Thrun, K.E., Modified Method 5 Train and Source Assessment Sampling System: Operator's Manual, U.S. Environmental Protection Agency, EPA/600/8–85/003/1985).
4. Shigehara, R.T., Adjustments in the EPA Nomograph for Different Pitot Tube Coefficients and Dry Molecular Weights, Stack Sampling News, 2:4–11 (October 1974).
5. U.S. Environmental Protection Agency, 40 CFR part 60, Appendices A–1, A–2, and A–3, Methods 1–5.
6. Vollaro, R.F., A Survey of Commercially Available Instrumentation for the Measurement of Low-Range Gas Velocities, Research Triangle Park, NC, U.S. Environmental Protection Agency, Emissions Measurement Branch, November 1976 (unpublished paper).

*18.0 Diagrams*

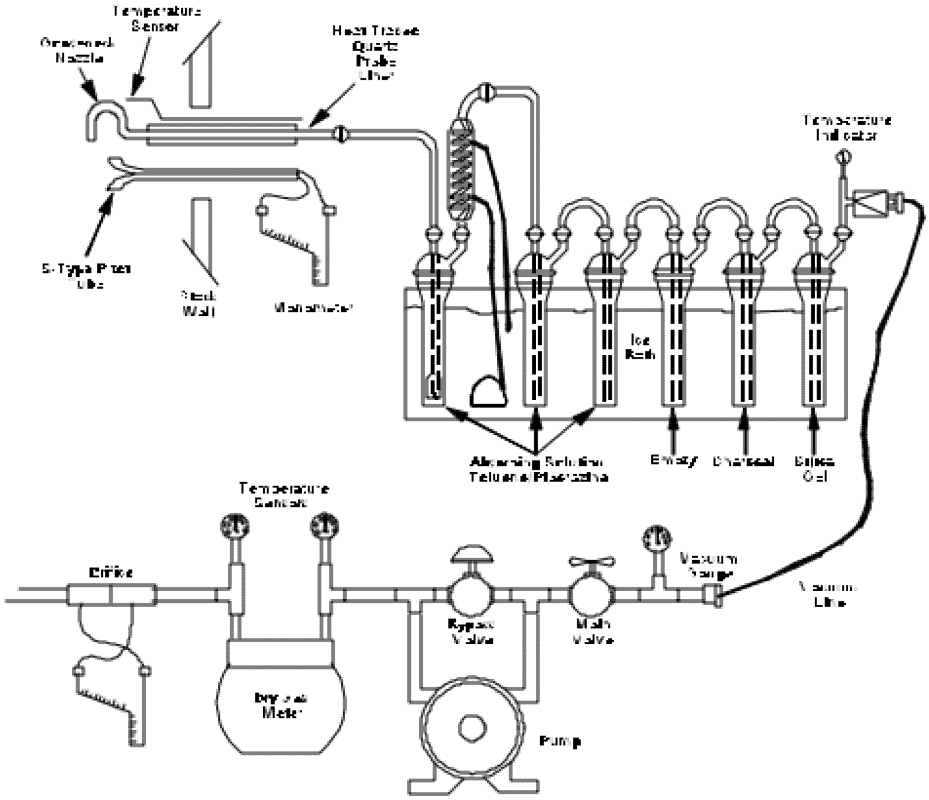


**Figure 326-1—Method 326 Sampling Train**

[57 FR 61992, Dec. 29, 1992]

EDITORIAL NOTE: For FEDERAL REGISTER citations affecting appendix A to part 63, see the List of CFR Sections Affected, which appears in the Finding Aids section of the printed volume and at *www.govinfo.gov*.

## APPENDIX B TO PART 63—SOURCES DEFINED FOR EARLY REDUCTION PROVISIONS

| Source | Location of definition |
|---|---|
| 1. Organic Process Equipment in Volatile Hazardous Air Pollutant Service at Chemical Plants and Other Designated Facilities. | 56 FR 9315, March 6, 1991, Announcement of Negotiated Rulemaking |
| a. All valves in gas or light liquid service within a process unit | |
| b. All pumps in light liquid service within a process unit | |
| c. All connectors in gas or light liquid service within a process unit | |
| d. Each compressor | |
| e. Each product accumulator vessel | |
| f. Each agitator | |
| g. Each pressure relief device | |
| h. Each open-ended valve or line | |
| i. Each sampling connection system | |
| j. Each instrumentation system | |
| k. Each pump, valve, or connector in heavy liquid service | |
| l. Each closed vent system and control device | |

[57 FR 62002, Dec. 29, 1992]

## APPENDIX C TO PART 63—DETERMINATION OF THE FRACTION BIODEGRADED ($F_{bio}$) IN A BIOLOGICAL TREATMENT UNIT

### *I. Purpose*

The purpose of this appendix is to define the procedures for an owner or operator to use to calculate the site specific fraction of organic compounds biodegraded ($F_{bio}$) in a biological treatment unit. If an acceptable level of organic compounds is destroyed rather than emitted to the air or remaining in the effluent, the biological treatment unit may be used to comply with the applicable treatment requirements without the unit being covered and vented through a closed vent system to an air pollution control device.

The determination of $F_{bio}$ shall be made on a system as it would exist under the rule. The owner or operator should anticipate changes that would occur to the wastewater flow and concentration of organics, to be treated by the biological treatment unit, as a result of enclosing the collection and treatment system as required by the rule.

Unless otherwise specified, the procedures presented in this appendix are designed to be applied to thoroughly mixed treatment units. A thoroughly mixed treatment unit is a unit that is designed and operated to approach or achieve uniform biomass distribution and organic compound concentration throughout the aeration unit by quickly dispersing the recycled biomass and the wastewater entering the unit. Detailed discussion on how to determine if a biological treatment unit is thoroughly mixed can be found in reference 7. Systems that are not thoroughly mixed treatment units should be subdivided into a series of zones that have uniform characteristics within each zone. The number of zones required to characterize a biological treatment system will depend on the design and operation of the treatment system. Detailed discussion on how to determine the number of zones in a biological treatment unit and examples of determination of $f_{bio}$ can be found in reference 8. Each zone should then be modeled as a separate unit. The amount of air emissions and biodegradation from the modeling of these separate zones can then be added to reflect the entire system.

### *II. Definitions*

Biological treatment unit = wastewater treatment unit designed and operated to promote the growth of bacteria to destroy organic materials in wastewater.

$f_{bio}$ = The fraction of individual applicable organic compounds in the wastewater biodegraded in a biological treatment unit.

$F_{bio}$ = The fraction of total applicable organic compounds in the wastewater biodegraded in a biological treatment unit.

Fe = The fraction of applicable organic compounds emitted from the wastewater to the atmosphere.

K1 = First order biodegradation rate constant, L/g MLVSS-hr

KL = liquid-phase mass transfer coefficient, m/s

M = compound specific mass flow weighted average of organic compounds in the wastewater, Mg/Yr

### *III. Procedures for Determination of $f_{bio}$*

The first step in the analysis to determine if a biological treatment unit may be used without being covered and vented through a closed-vent system to an air pollution control device is to determine the compound-specific $f_{bio}$. The following procedures may be used to determine $f_{bio}$:

(1) The EPA Test Method 304A or 304B (appendix A, part 63)—Method for the Determination of Biodegradation Rates of Organic Compounds,

(2) Performance data with and without biodegradation,

(3) Inlet and outlet concentration measurements,

(4) Batch tests,

(5) Multiple zone concentration measurements.

All procedures must be executed so that the resulting $f_{bio}$ is based on the collection system and waste management units being

in compliance with the rule. If the collection system and waste management units meet the suppression requirements at the time of the test, any of the procedures may be chosen. If the collection system and waste management units are not in compliance at the time of the performance test, then only Method 304A, B, or the batch test shall be chosen. If Method 304A, B, or the batch test is used, any anticipated changes to the influent of the full-scale biological treatment unit that will occur after the facility has enclosed the collection system must be represented in the influent feed to the benchtop bioreactor unit, or test unit.

Select one or more appropriate procedures from the five listed above based on the availability of site specific data and the type of mixing that occurs in the unit (thoroughly mixed or multiple mixing zone). If the facility does not have site-specific data on the removal efficiency of its biological treatment unit, then Procedure 1 or Procedure 4 may be used. Procedure 1 allows the use of a benchtop bioreactor to determine the first-order biodegradation rate constant. An owner or operator may elect to assume the first order biodegradation rate constant is zero for any regulated compound(s) present in the wastewater. Procedure 4 explains two types of batch tests which may be used to estimate the first order biodegradation rate constant. An owner or operator may elect to assume the first order biodegradation rate constant is zero for any regulated compound(s) present in the wastewater. Procedure 3 would be used if the facility has, or measures to determine, data on the inlet and outlet individual organic compound concentration for the biological treatment unit. Procedure 3 may only be used on a thoroughly mixed treatment unit. Procedure 5 is the concentration measurement test that can be used for units with multiple mixing zones. Procedure 2 is used if a facility has or obtains performance data on a biotreatment unit prior to and after addition of the microbial mass. An example where Procedure 2 could be used is an activated sludge unit where measurements have been taken on inlet and exit concentration of organic compounds in the wastewater prior to seeding with the microbial mass and startup of the unit. The flow chart in figure 1 outlines the steps to use for each of the procedures.

*A. Method 304A or 304B (Procedure 1)*

If the first procedure is selected, follow the instructions in appendix A of part 63 Method 304A ''Method for the Determination of Biodegradation Rates of Organic Compounds (Vented Option)'' or Method 304B ''Method for the Determination of Biodegradation Rates of Organic Compounds (Scrubber Option).'' Method 304A or 304B provides instruction on setting up and operating a self-contained benchtop bioreactor system which is operated under conditions representative of the target full-scale system. Method 304A uses a benchtop bioreactor system with a vent, and uses modeling to estimate any air emissions. Method 304B uses a benchtop bioreactor system which is equipped with a scrubber and is not vented.

There are some restrictions on which method a source may use. If the facility is measuring the rate of biodegradation of compounds that may tend to react or hydrolyze in the scrubber of Method 304B, this method shall not be used and Method 304A is the required method. If a Henry's law value is not available to use with Form V, then Method 304A shall not be used and Method 304B is the required method. When using either method, the feed flow to the benchtop bioreactor shall be representative of the flow and concentration of the wastewater that will be treated by the full-scale biological treatment unit after the collection and treatment system has been enclosed as required under the applicable subpart.

The conditions under which the full-scale biological treatment unit is run establish the operating parameters of Method 304A or 304B. If the biological treatment unit is operated under abnormal operating conditions (conditions outside the range of critical parameters examined and confirmed in the laboratory), the EPA believes this will adversely affect the biodegradation rate and is an unacceptable treatment option. The facility would be making multiple runs of the test method to simulate the operating range for its biological treatment unit. For wide ranges of variation in operating parameters, the facility shall demonstrate the biological treatment unit is achieving an acceptable level of control, as required by the regulation, across the ranges and not only at the endpoints.

If Method 304A is used, complete Form V initially. Form V is used to calculate K1 from the Method 304A results. Form V uses the Henry's law constant to estimate the fraction lost from the benchtop reactor vent. The owner or operator shall use the Henry's law values in Table I. Form V also gives direction for calculating an equivalent KL. Note on Form V if the calculated number for line 11 is greater than the calculated value for line 13, this procedure shall not be used to demonstrate the compound is biodegradable. If line 11 is greater than line 13, this is an indication the fraction emitted from the vent is greater than the fraction biodegraded. The equivalent KL determined on Form V is used in Form II (line 6). Estimation of the Fe and $f_{bio}$ must be done following the steps in Form III. Form III uses the previously calculated values of K1 and KL (equivalent KL), and site-specific parameters of the full-scale bioreactor as input to the calculations. Forms II, III, and V must

be completed for each organic compound in the wastewater to determine Fe and $f_{bio}$.

If Method 304B is used, perform the method and use the measurements to determine K1, which is the first-order biodegradation rate constant. Form I lists the sequence of steps in the procedure for calculating K1 from the Method 304B results. Once K1 is determined, KL must be calculated by use of mass transfer equations. Form II outlines the procedure to follow for use of mass transfer equations to determine KL. A computer program which incorporates these mass transfer equations may be used. Water7 is a program that incorporates these mass transfer equations and may be used to determine KL. Refer to Form II-A to determine KL, if Water7 or the most recent update to this model is used. In addition, the Bay Area Sewage Toxics Emission (BASTE) model version 3.0 or equivalent upgrade and the TOXCHEM (Environment Canada's Wastewater Technology Centre and Environmega, Ltd.) model version 1.10 or equivalent upgrade may also be used to determine KL for the biological treatment unit with several stipulations. The programs must be altered to output a KL value which is based on the site-specific parameters of the unit modeled, and the Henry's law values listed in Table I must be substituted for the existing Henry's law values in the programs. Input values used in the model and corresponding output values shall become documentation of the $f_{bio}$ determination. The owner or operator should be aware these programs do not allow modeling of certain units. To model these units, the owner or operator shall use one of the other appropriate procedures as outlined in this appendix. The owner or operator shall not use a default value for KL. The KL value determined by use of these models shall be based on the site-specific parameters of the specific unit. This KL value shall be inserted in Form II (line 6). Estimation of the Fe and $f_{bio}$ must be done following the steps in Form III. Form III uses the previously calculated values of K1 and KL, and site-specific parameters of the full-scale bioreactor as input to the calculations. Forms I, II, and III must be completed for each organic compound in the wastewater to determine Fe and $f_{bio}$.

*B. Performance Data With and Without Biodegradation (Procedure 2)*

Procedure 2 uses site-specific performance data that represents or characterizes operation of the unit both with and without biodegradation. As previously mentioned, proper determination of $f_{bio}$ must be made on a system as it would exist under the rule. Using Form IV, calculate KL and K1. After KL and K1 are determined, Form III is used to calculate Fe and $f_{bio}$ for each organic compound present in the wastewater.

*C. Inlet and Outlet Concentration Measurements (Procedure 3)*

Procedure 3 uses measured inlet and outlet organic compound concentrations for the unit. This procedure may only be used on a thoroughly mixed treatment unit. Again, proper determination of $f_{bio}$ must be made on a system as it would exist under the rule. The first step in using this procedure is to calculate KL using Form II. A computer model may be used. If the Water7 model or the most recent update to this model is used, then use Form II-A to calculate KL. After KL is determined using field data, complete Form VI to calculate K1. The TOXCHEM or BASTE model may also be used to calculate KL for the biological treatment unit, with the stipulations listed in procedure 304B. After KL and K1 are determined, Form III is used to calculate Fe and $f_{bio}$ for each organic compound.

*D. Batch Tests (Procedure 4)*

Two types of batch tests which may be used to determine kinetic parameters are: (1) The aerated reactor test and (2) the sealed reactor test. The aerated reactor test is also known as the BOX test (batch test with oxygen addition). The sealed reactor test is also known as the serum bottle test. These batch tests should be conducted only by persons familiar with procedures for determining biodegradation kinetics. Detailed discussions of batch procedures for determining biodegradation kinetic parameters can be found in references 1–4.

For both batch test approaches, a biomass sample from the activated sludge unit of interest is collected, aerated, and stored for no more than 4 hours prior to testing. To collect sufficient data when biodegradation is rapid, it may be necessary to dilute the biomass sample. If the sample is to be diluted, the biomass sample shall be diluted using treated effluent from the activated sludge unit of interest to a concentration such that the biodegradation test will last long enough to make at least six concentration measurements. It is recommended that the tests not be terminated until the compound concentration falls below the limit of quantitation (LOQ). Measurements that are below the LOQ should not be used in the data analysis. Biomass concentrations shall be determined using standard methods for measurement of mixed liquor volatile suspended solids (MLVSS) (reference 5).

The change in concentration of a test compound may be monitored by either measuring the concentration in the liquid or in the reactor headspace. The analytical technique chosen for the test should be as sensitive as possible. For the batch test procedures described in this section, equilibrium conditions must exist between the liquid and gas phases of the experiments because the

data analysis procedures are based on this premise. To use the headspace sampling approach, the reactor headspace must be in equilibrium with the liquid so that the headspace concentrations can be correlated with the liquid concentrations. Before the biodegradation testing is conducted, the equilibrium assumption must be verified. A discussion of the equilibrium assumption verification is given below in sections D.1 and D.2 since different approaches are required for the two types of batch tests.

To determine biodegradation kinetic parameters in a batch test, it is important to choose an appropriate initial substrate (compound(s) of interest) concentration for the test. The outcome of the batch experiment may be influenced by the initial substrate ($S_O$) to biomass ($X_O$) ratio (see references 3, 4, and 6). This ratio is typically measured in chemical oxygen demand (COD) units. When the $S_O/X_O$ ratio is low, cell multiplication and growth in the batch test is negligible and the kinetics measured by the test are representative of the kinetics in the activated sludge unit of interest. The $S_O/X_O$ ratio for a batch test is determined with the following equation:

$$\frac{S_0}{X_0} = \frac{S_i}{1.42\ X} \quad \text{(Eqn App. C} - 1)$$

Where:

$S_O/X_O$ = initial substrate to biomass ratio on a COD basis

$S_i$ = initial substrate concentration in COD units (g COD/L)

X = biomass concentration in the batch test (g MLVSS/L)

1.42 = Conversion factor to convert to COD units

For the batch tests described in this section, the $S_O/X_O$ ratio (on a COD basis) must be initially less than 0.5.

1. *Aerated Reactor Test*. An aerated draft tube reactor may be used for the biokinetics testing (as an example see Figure 2 of appendix C). Other aerated reactor configurations may also be used. Air is bubbled through a porous frit at a rate sufficient to aerate and keep the reactor uniformly mixed. Aeration rates typically vary from 50 to 200 ml/min for a 1 liter system. A mass flow rate controller is used to carefully control the air flow rate because it is important to have an accurate measure of this rate. The dissolved oxygen (DO) concentration in the system must not fall below 2 mg/liter so that the biodegradation observed will not be DO-limited. Once the air flow rate is established, the test mixture (or compound) of interest is then injected into the reactor and the concentration of the compound(s) is monitored over time. Concentrations may be monitored in the liquid or in the headspace. A minimum of six samples shall be taken over the period of the test. However, it is necessary to collect samples until the compound concentration falls below the LOQ. If liquid samples are collected, they must be small enough such that the liquid volume in the batch reactor does not change by more than 10%.

Before conducting experiments with biomass, it is necessary to verify the equilibrium assumption. The equilibrium assumption can be verified by conducting a stripping experiment using the effluent (no biomass) from the activated sludge unit of interest. Effluent is filtered with a 0.45 um or smaller filter and placed in the draft tube reactor. Air is sparged into the system and the compound concentration in the liquid or headspace is monitored over time. This test with no biomass may provide an estimate of the Henry's law constant. If the system is at equilibrium, the Henry's law constant may be estimated with the following equation:

$$-\ln\left(C / C_0\right) = \left(GK_{eq} / V\right)t \qquad \text{(Eqn App. C} - 2)$$

Where:

C = cencentration at time, t (min)

$C_O$ = concentration at t = 0

G = volumetric gas flow rate (ml/min)

V = liquid volume in the batch reactor (ml)

$K_{eq}$ = Henry's law constant (mg/L-gas)/(mg/L-liquid)

t = time (min)

A plot of—$\ln(C/C_o)$ as a function of t will have a slope equal to $GK_{eq}/V$. The equilibrium assumption can be verified by comparing the experimentally determined $K_{eq}$ for the system to literature values of the Henry's Law constant (including those listed in this appendix). If $K_{eq}$ does not match the Henry's law constant, $K_{eq}$ shall be determined from analysis of the headspace and liquid concentration in a batch system.

The concentration of a compound decreases in the bioreactor due to both biodegradation and stripping. Biodegradation processes are typically described with a Monod model. This model and a stripping expression are combined to give a mass balance for the aerated draft tube reactor):

$$-\frac{ds}{dt} = \left(\frac{GK_{eq}}{V}\right)s + \left(\frac{Q_m X}{K_s + s}\right)s \qquad \text{(Eqn App. C} - 3)$$

Where:

s = test compound concentration, mg/liter
G = volumetric gas flow rate, liters/hr
$K_{eq}$ = Henry's Law constant measured in the system, (mg/liter gas)/(mg/liter liquid)
V = volume of liquid in the reactor, liters
X = biomass concentration (g MLVSS/liter)
$Q_m$ = maximum rate of substrate removal, mg/g MLVSS/hr
$K_S$ = Monod biorate constant at half the maximum rate, mg/liter

Equation App. C–3 can be integrated to obtain the following equation:

$$-t = \frac{VK_s}{A}\ln\left(\frac{s}{s_0}\right) + \frac{Q_m X V^2}{AB}\ln\left(\frac{A + Bs}{A + Bs_0}\right) \qquad \text{(Eqn App. C-4)}$$

Where:

$A = GK_{eq}K_s + Q_m VX$
$B = GK_{eq}$
$S_o$ = test compound concentration at t = 0

This equation is used along with the substrate concentration versus time data to determine the best fit parameters ($Q_m$ and $K_S$) to describe the biodegradation process in the aerated reactor. If the aerated reactor test is used, the following procedure is used to analyze the data. Evaluate $K_{eq}$ for the compound of interest with Form XI. The concentration in the vented headspace or liquid is measured as a function of time and the data is entered on Form XI. A plot is made from the data and attached to the Form XI. $K_{eq}$ is calculated on Form XI and the results are contrasted with the expected value of Henry's law obtained from Form IX. If the comparison is satisfactory, the stripping constant is calculated from $K_{eq}$, completing Form XI. The values of $K_{eq}$ may differ because the theoretical value of $K_{eq}$ may not be applicable to the system of interest. If the comparison of the calculated $K_{eq}$ from the form and the expected value of Henry's law is unsatisfactory, Form X can alternatively be used to validate $K_{eq.}$ If the aerated reactor is demonstrated to not be at equilibrium, either modify the reactor design and/or operation, or use another type of batch test.

The compound-specific biorate constants are then measured using Form XII. The stripping constant that was determined from Form XI and a headspace correction factor of 1 are entered on Form XII. The aerated reactor biotest may then be run, measuring concentrations of each compound of interest as a function of time. If headspace concentrations are measured instead of liquid concentrations, then the corresponding liquid concentrations are calculated from the headspace measurements using the $K_{eq}$ determined on Form XI and entered on Form XII.

The concentration data on Form XII may contain scatter that can adversely influence the data interpretation. It is possible to curve fit the concentration data and enter the concentrations on the fitted curve instead of the actual data. If curve fitting is used, the curve-fitting procedure must be based upon the Equation App. C–4. When curve fitting is used, it is necessary to attach a plot of the actual data and the fitted curve to Form XII.

If the stripping rate constant is relatively large when compared to the biorate at low concentrations, it may be difficult to obtain accurate evaluations of the first-order biorate constant. In these cases, either reducing the stripping rate constant by lowering the aeration rate, or increasing the biomass concentrations should be considered.

The final result of the batch testing is the measurement of a biorate that can be used to estimate the fraction biodegraded, $f_{bio}$. The number transferred to Form III is obtained from Form XII, line 9.

2. *Sealed Reactor Test*. This test uses a closed system to prevent losses of the test compound by volatilization. This test may be conducted using a serum bottle or a sealed draft tube reactor (for an example see Figure 3 of appendix C). Since no air is supplied, it is necessary to ensure that sufficient oxygen is present in the system. The DO concentration in the system must not fall below 2 mg/liter so that the biodegradation observed will not be DO-limited. As an alternative, oxygen may be supplied by electrolysis as needed to maintain the DO concentration above 2 mg/liter. The reactor contents must be uniformly mixed, by stirring

or agitation using a shaker or similar apparatus. The test mixture (or compound) of interest is injected into the reactor and the concentration is monitored over time. A minimum of six samples shall be taken over the period of the test. However, it is necessary to monitor the concentration until it falls below the LOQ.

The equilibrium assumption must be verified for the batch reactor system. In this case, $K_{eq}$ may be determined by simultaneously measuring gas and liquid phase concentrations at different times within a given experiment. A constant ratio of gas/liquid concentrations indicates that equilibrium conditions are present and $K_{eq}$ is not a function of concentration. This ratio is then taken as the $K_{eq}$ for the specific compound in the test. It is not necessary to measure $K_{eq}$ for each experiment. If the ratio is not constant, the equilibrium assumption is not valid and it is necessary to (1) increase mixing energy for the system and retest for the equilibrium assumption, or (2) use a different type of test (for example, a collapsible volume reactor).

The concentration of a compound decreases in the bioreactor due to biodegradation according to Equation App. C–5:

$$\frac{ds}{dt} = \left[\frac{-V_l}{V_g K_{eq} + V_l}\right]\left[\left(\frac{Q_m X}{K_s + s}\right) s\right] \qquad \text{(Eqn App. C – 5)}$$

Where:

s = test compound concentration (mg/liters)

$V_l$ = the average liquid volume in the reactor (liters)

$V_g$ = the average gas volume in the reactor (liters)

$Q_m$ = maximum rate of substrate removal (mg/g *ML* VSS/hr)

$K_{eq}$ = Henry's Law constant determined for the test, (mg/liter gas)/(mg/liter liquid)

$K_s$ = Monod biorate constant at one-half the maximum rate (mg/liter)

t = time (hours)

X = biomass concentration (g *ML* VSS/liter)

$s_o$ = test compound concentration at time t = 0

Equation App. C–5 can be solved analytically to give:

$$t = \frac{-\left(V_g K_{eq} + V_l\right)}{V_l Q_m X}\left[\left(s - s_0\right) + K_s \ln\left(\frac{s}{s_0}\right)\right] \qquad \text{(Eqn App. C-6)}$$

This equation is used along with the substrate concentration versus time data to determine the best fit parameters ($Q_m$ and $K_s$) to describe the biodegradation process in the sealed reactor.

If the sealed reactor test is used, Form X is used to determine the headspace correction factor. The disappearance of a compound in the sealed reactor test is slowed because a fraction of the compound is not available for biodegradation because it is present in the headspace. If the compound is almost entirely in the liquid phase, the headspace correction factor is approximately one. If the headspace correction factor is substantially less than one, improved mass transfer or reduced headspace may improve the accuracy of the sealed reactor test. A preliminary sealed reactor test must be conducted to test the equilibrium assumption. As the compound of interest is degraded, simultaneous headspace and liquid samples should be collected and Form X should be used to evaluate $K_{eq.}$ The ratio of headspace to liquid concentrations must be constant in order to confirm that equilibrium conditions exist. If equilibrium conditions are not present, additional mixing or an alternate reactor configuration may be required.

The compound-specific biorate constants are then calculated using Form XII. For the sealed reactor test, a stripping rate constant of zero and the headspace correction factor that was determined from Form X are entered on Form XII. The sealed reactor test may then be run, measuring the concentrations of each compound of interest as a function of time. If headspace concentrations are measured instead of liquid concentrations, then the corresponding liquid concentrations are calculated from the headspace measurements using $K_{eq}$ from Form X and entered on Form XII.

The concentration data on Form XII may contain scatter that can adversely influence the data interpretation. It is possible to curve fit the concentration data and enter the concentrations on the fitted curve instead of the actual data. If curve fitting is used, the curve-fitting procedure must be based upon Equation App. C–6. When curve fitting is used, it is necessary to attach a plot of the actual data and the fitted curve to Form XII.

If a sealed collapsible reactor is used that has no headspace, the headspace correction factor will equal 1, but the stripping rate constant may not equal 0 due to diffusion losses through the reactor wall. The ratio of the rate of loss of compound to the concentration of the compound in the reactor (units of per hour) must be evaluated. This loss ratio has the same units as the stripping rate constant and may be entered as the stripping rate constant on line 1 of Form XII.

If the loss due to diffusion through the walls of the collapsible reactor is relatively large when compared to the biorate at low concentrations, it may be difficult to obtain accurate evaluations of the first-order biorate constant. In these cases, either replacing the materials used to construct the reactor with materials of low permeability or increasing the biomass concentration should be considered.

The final result of the batch testing is the measurement of a biorate that can be used to estimate the fraction biodegraded, $f_{bio}$. The number transferred to Form III is obtained from Form XII, line 9.

The number on Form XII line 9 will equal the Monod first-order biorate constant if the full-scale system is operated in the first-order range. If the full-scale system is operated at concentrations above that of the Monod first-order range, the value of the number on line 9 will be somewhat lower than the Monod first-order biorate constant. With supporting biorate data, the Monod model used in Form XII may be used to estimate the effective biorate constant K1 for use in Form III.

If a reactor with headspace is used, analysis of the data using equation App. C–6 is valid only if $V_l$ and $V_g$ do not change more than 10% (i.e., they can be approximated as constant for the duration of the test). Since biodegradation is occurring only in the liquid, as the liquid concentration decreases it is necessary for mass to transfer from the gas to the liquid phase. This may require vigorous mixing and/or reducing the volume in the headspace of the reactor.

If there is no headspace (e.g., a collapsible reactor), equation App. C–6 is independent of $V_l$ and there are no restrictions on the liquid volume. If a membrane or bag is used as the collapsible-volume reactor, it may be important to monitor for diffusion losses in the system. To determine if there are losses, the bag should be used without biomass and spiked with the compound(s) of interest. The concentration of the compound(s) in the reactor should be monitored over time. The data are analyzed as described above for the sealed reactor test.

3. *Quality Control/Quality Assurance (QA/QC).* A QA/QC plan outlining the procedures used to determine the biodegradation rate constants shall be prepared and a copy maintained at the source. The plan should include, but may not be limited to:

1. A description of the apparatus used (e.g., size, volume, method of supplying air or oxygen, mixing, and sampling procedures) including a simplified schematic drawing.

2. A description of how biomass was sampled from the activated sludge unit.

3. A description of how biomass was held prior to testing (age, etc.).

4. A description of what conditions (DO, gas-liquid equilibrium, temperature, etc.) are important, what the target values are, how the factors were controlled, and how well they were controlled.

5. A description of how the experiment was conducted, including preparation of solutions, dilution procedures, sampling procedures, monitoring of conditions, etc.

6. A description of the analytical instrumentation used, how the instruments were calibrated, and a summary of the precision for that equipment.

7. A description of the analytical procedures used. If appropriate, reference to an ASTM, EPA or other procedure may be used. Otherwise, describe how the procedure is done, what is done to measure precision, accuracy, recovery, etc., as appropriate.

8. A description of how data are captured, recorded, and stored.

9. A description of the equations used and their solutions, including a reference to any software used for calculations and/or curve-fitting.

### *E. Multiple Zone Concentration Measurements (Procedure 5)*

Procedure 5 is the concentration measurement method that can be used to determine the $f_{bio}$ for units that are not thoroughly mixed and thus have multiple zones of mixing. As with the other procedures, proper determination of $f_{bio}$ must be made on a system as it would exist under the rule. For purposes of this calculation, the biological unit must be divided[1] into zones with uniform characteristics within each zone. The number of zones that is used depends on the complexity of the unit. Reference 8, ''Technical Support

[1] This is a mathematical division of the actual unit; not addition of physical barriers.

Document for the Evaluation of Aerobic Biological Treatment Units with Multiple Mixing Zones,'' is a source for further information concerning how to determine the number of zones that should be used for evaluating your unit. The following information on the biological unit must be available to use this procedure: basic unit variables such as inlet and recycle wastewater flow rates, type of agitation, and operating conditions; measured representative organic compound concentrations in each zone and the inlet and outlet; and estimated mass transfer coefficients for each zone.

Reference 8 ''Technical Support Document for the Evaluation of Aerobic Biological Treatment Units with Multiple Mixing Zones,'' is a source for further information concerning how to interpolate the biorates for multiple zones. In units with well-characterized concentration measurements obtained in an initial evaluation of the unit, it may be possible to demonstrate that there is a good correlation of the component concentrations with the locations in the multiple-zone unit. With this good correlation, it may be possible to accurately predict the concentrations in selected zones without actually testing each selected zone. This correlation method may be used for units that have many zones (greater than 5) or where one of the interior zones is not readily accessible for sampling. To use this correlation method of estimating zone concentrations, it is necessary to measure the concentrations in the inlet unit, the exit unit, and sufficient interior units to obtain a correlation of component concentrations with the locations. You cannot use this correlation method of estimating selected zone concentrations if monitoring of each zone is required, or if the accuracy and precision of the correlation is inferior to actual individual sampling error. The accuracy and precision of the correlation may be improved by increasing the number of locations tested. Because the correlation is based on many samples, it should provide an accurate representation of a stable operating system.

The estimated mass transfer coefficient for each compound in each zone is obtained from Form II using the characteristics of each zone. A computer model may be used. If the Water7 model or the most recent update to this model is used, then use Form II-A to calculate KL. The TOXCHEM or BASTE model may also be used to calculate KL for the biological treatment unit, with the stipulations listed in Procedure 304B. Compound concentration measurements for each zone are used in Form XIII to calculate the $f_{bio}$. A copy of Form XIII is completed for each of the compounds of concern treated in the biological unit.

*IV. Calculation of $F_{bio}$*

At this point, the individual $f_{bios}$ determined by the previously explained procedures must be summed to obtain the total $F_{bio}$. To determine the $F_{bio}$ multiply each compound specific $f_{bio}$ by the compound-specific average mass flow rate of the organic compound in the wastewater stream (see regulation for instruction on calculation of average mass flow rate). Sum these products and divide by the total wastewater stream average mass flow rate of organic compounds.

$$F_{bio} = \frac{\sum_{i=1}^{N} \left( f_{bio} i \times M_i \right)}{\sum_{i=1}^{n} M_i} \qquad \text{(Eqn App. C – 7)}$$

M = compound specific average mass flow rate of the organic compounds in the wastewater (Mg/Yr)

n = number of organic compounds in the wastewater

The $F_{bio}$ is then used in the applicable compliance equations in the regulation to determine if biodegradation may be used to comply with the treatment standard without covering and venting to an air pollution control device.

*References*

1. Rajagopalan, S. et al. ''Comparison of Methods for Determining Biodegradation Kinetics of Volatile Organic Compounds.'' Proceedings of Water Environment Federation. 67th Annual Conference, October 15–19, 1994.

2. Ellis, T.G. et al. ''Determination of Toxic Organic Chemical Biodegradation Kinetics Using Novel Respirometric Technique''. Proceedings Water Environment Federation, 67th Annual Conference, October 15–19, 1994.

3. Pitter, P. and J. Chudoba. Biodegradability of Organic Substances in

the Aquatic Environment. CRC Press, Boca Raton, FL. 1990.

4. Grady, C.P.L., B. Smets, and D. Barbeau. Variability in kinetic parameter estimates: A review of possible causes and a proposed terminology. Wat. Res. 30 (3), 742–748, 1996.

5. Eaton, A.D., et al. eds., Standard Methods for the Examination of Water and Wastewater, 19th Edition, American Public Health Association, Washington, DC, 1995.

6. Chudoba P., B. Capdeville, and J. Chudoba. Explanation of biological meaning of the So/Xo ratio in batch cultivation. Wat. Sci. Tech. 26 (3/4), 743–751, 1992.

7. Technical Support Document for Evaluation of Thoroughly Mixed Biological Treatment Units. November 1998.

8. Technical Support Document for the Evaluation of Aerobic Biological Treatment Units with Multiple Mixing Zones. July 1999.

TABLE I

| Compound | $H_L$ @ 25 °C (atm/mole frac) | $H_L$ @ 100 °C (atm/mole frac) |
|---|---|---|
| 1 Acetaldehyde | 4.87e + 00 | 5.64e + 01 |
| 3 Acetonitrile | 1.11e + 00 | 1.78e + 01 |
| 4 Acetophenone | 5.09e − 01 | 2.25e + 01 |
| 5 Acrolein | 4.57e + 00 | 6.61e + 01 |
| 8 Acrylonitrile | 5.45e + 00 | 6.67e + 01 |
| 9 Allyl chloride | 5.15e + 02 | 2.26e + 03 |
| 10 Aniline | 9.78e − 02 | 1.42e + 00 |
| 12 Benzene | 3.08e + 02 | 1.93e + 03 |
| 14 Benzyl chloride | 1.77e + 01 | 2.88e + 02 |
| 15 Biphenyl | 2.27e + 01 | 1.27e + 03 |
| 17 Bromoform | 2.96e + 01 | 3.98e + 02 |
| 18 1,3-Butadiene | 3.96e + 03 | 1.56e + 04 |
| 20 Carbon disulfide | 1.06e + 03 | 3.60e + 03 |
| 21 Carbon tetrachloride | 1.68e + 03 | 1.69e + 04 |
| 23 2-Chloroacetophenone | 4.84e − 02 | 1.43e + 01 |
| 24 Chlorobenzene | 2.09e + 02 | 3.12e + 03 |
| 25 Chloroform | 2.21e + 02 | 1.34e + 03 |
| 26 Chloroprene | 5.16e + 01 | 1.74e + 02 |
| 29 o-Cresol | 9.12e − 02 | 2.44e + 01 |
| 31 Cumene | 7.28e + 02 | 7.15e + 03 |
| 32 1,4-Dichlorobenzene(p) | 1.76e + 02 | 1.95e + 03 |
| 33 Dichloroethyl ether | 1.14e + 00 | 3.57e + 01 |
| 34 1,3-Dichloropropene | 1.97e + 02 | 1.44e + 03 |
| 36 N,N-Dimethylaniline | 7.70e − 01 | 5.67e + 02 |
| 37 Diethyl sulfate | 3.41e − 01 | 4.22e + 01 |
| 38 3,3′-Dimethylbenzidine | 7.51e − 05 | 5.09e − 01 |
| 40 1,1-Dimethylhydrazine | 9.11e − 02 | 1.57e + 01 |
| 42 Dimethyl sulfate | 2.23e − 01 | 1.43e + 01 |
| 43 2,4-Dinitrophenol | 2.84e − 01 | 1.50e + 02 |
| 44 2,4-Dinitrotoluene | 4.00e − 01 | 9.62e + 00 |
| 45 1,4-Dioxane | 3.08e − 01 | 9.53e + 00 |
| 47 Epichlorohydrin | 1.86e + 00 | 4.34e + 01 |
| 48 Ethyl acrylate | 1.41e + 01 | 3.01e + 02 |
| 49 Ethylbenzene | 4.38e + 02 | 4.27e + 03 |
| 50 Ethyl chloride (chloroethane) | 6.72e + 02 | 3.10e + 03 |
| 51 Ethylene dibromide | 3.61e + 01 | 5.15e + 02 |
| 52 Ethylene dichloride (1,2-Dichloroethane) | 6.54e + 01 | 5.06e + 02 |
| 54 Ethylene oxide | 1.32e + 01 | 9.09e + 01 |
| 55 Ethylidene dichloride (1,1-Dichloroethane) | 3.12e + 02 | 2.92e + 03 |
| 57 Ethylene glycol dimethyl ether | 1.95e + 00 | 4.12e + 01 |
| 60 Ethylene glycol monoethyl ether acetate | 9.86e − 02 | 6.03e + 00 |
| 62 Ethylene glycol monomethyl ether acetate | 1.22e − 01 | 6.93e + 00 |
| 64 Diethylene glycol dimethyl ether | 8.38e − 02 | 4.69e + 00 |
| 69 Diethylene glycol diethyl ether | 1.19e − 01 | 7.71e + 00 |
| 72 Ethylene glycol monobutyl ether acetate | 2.75e − 01 | 2.50e + 01 |
| 73 Hexachlorobenzene | 9.45e + 01 | 2.57e + 04 |
| 74 Hexachlorobutadiene | 5.72e + 02 | 6.92e + 03 |
| 75 Hexachloroethane | 4.64e + 02 | 7.49e + 04 |
| 76 Hexane | 4.27e + 04 | 9.44e + 04 |
| 78 Isophorone | 3.68e − 01 | 1.68e + 01 |
| 80 Methanol | 2.89e − 01 | 7.73e + 00 |
| 81 Methyl bromide (Bromomethane) | 3.81e + 02 | 2.12e + 03 |
| 82 Methyl chloride (Chloromethane) | 4.90e + 02 | 2.84e + 03 |
| 83 Methyl chloroform (1,1,1-Trichloroethane) | 9.67e + 02 | 5.73e + 03 |
| 84 Methyl ethyl ketone (2-Butanone) | 7.22e + 00 | 5.92e + 01 |
| 86 Methyl isobutyl ketone (Hexone) | 2.17e + 01 | 3.72e + 02 |
| 88 Methyl methacrylate | 7.83e + 00 | 9.15e + 01 |
| 89 Methyl tert-butyl ether | 3.08e + 01 | 2.67e + 02 |

TABLE I—Continued

| Compound | $H_L$ @ 25 °C (atm/mole frac) | $H_L$ @ 100 °C (atm/mole frac) |
|---|---|---|
| 90 Methylene chloride (Dichloromethane) | 1.64e + 02 | 9.15e + 02 |
| 93 Naphthalene | 2.68e + 01 | 7.10e + 02 |
| 94 Nitrobenzene | 1.33e + 00 | 2.80e + 01 |
| 96 2-Nitropropane | 6.61e + 00 | 8.76e + 01 |
| 99 Phosgene | 7.80e + 02 | 3.51e + 03 |
| 102 Propionaldehyde | 3.32e + 00 | 1.42e + 02 |
| 103 Propylene dichloride | 1.59e + 02 | 1.27e + 03 |
| 104 Propylene oxide | 1.98e + 01 | 1.84e + 02 |
| 106 Styrene | 1.45e + 02 | 1.72e + 03 |
| 107 1,1,2,2-Tetrachloroethane | 1.39e + 01 | 1.99e + 02 |
| 108 Tetrachloroethylene (Perchloroethylene) | 9.83e + 02 | 1.84e + 04 |
| 109 Toluene | 3.57e + 02 | 2.10e + 03 |
| 112 o-Toluidine | 1.34e − 01 | 1.15e + 01 |
| 113 1,2,4-Trichlorobenzene | 1.07e + 02 | 1.04e + 03 |
| 114 1,1,2-Trichloroethane | 4.58e + 01 | 5.86e + 02 |
| 115 Trichloroethylene | 5.67e + 02 | 7.66e + 03 |
| 116 2,4,5-Trichlorophenol | 4.84e − 01 | 6.27e + 01 |
| 117 Triethylamine | 6.94e + 00 | 2.57e + 02 |
| 118 2,2,4-Trimethylpentane | 1.85e + 05 | 9.74e + 05 |
| 119 Vinyl acetate | 2.82e + 01 | 2.80e + 02 |
| 120 Vinyl chloride | 1.47e + 03 | 6.45e + 03 |
| 121 Vinylidene chloride (1,1-Dichloroethylene) | 1.44e + 03 | 1.40e + 04 |
| 123 m-Xylene | 4.13e + 02 | 3.25e + 03 |
| 124 o-Xylene | 2.71e + 02 | 2.55e + 03 |
| 125 p-Xylene | 4.13e + 02 | 3.20e + 03 |

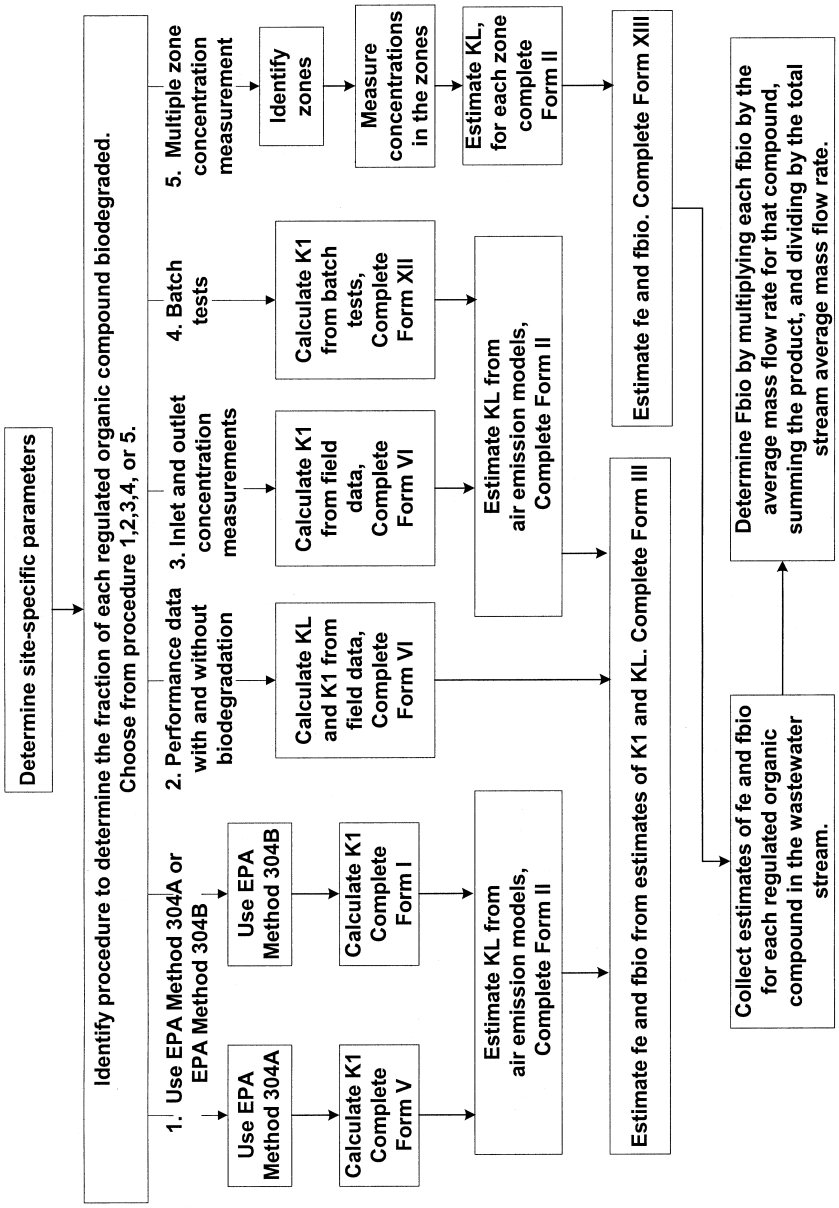


Figure 1. ALTERNATIVE EXPERIMENTAL METHODS FOR DETERMINING THE FRACTION OF ORGANIC COMPOUND BIODEGRADED (Fbio) IN A BIOLOGICAL TREATMENT UNIT

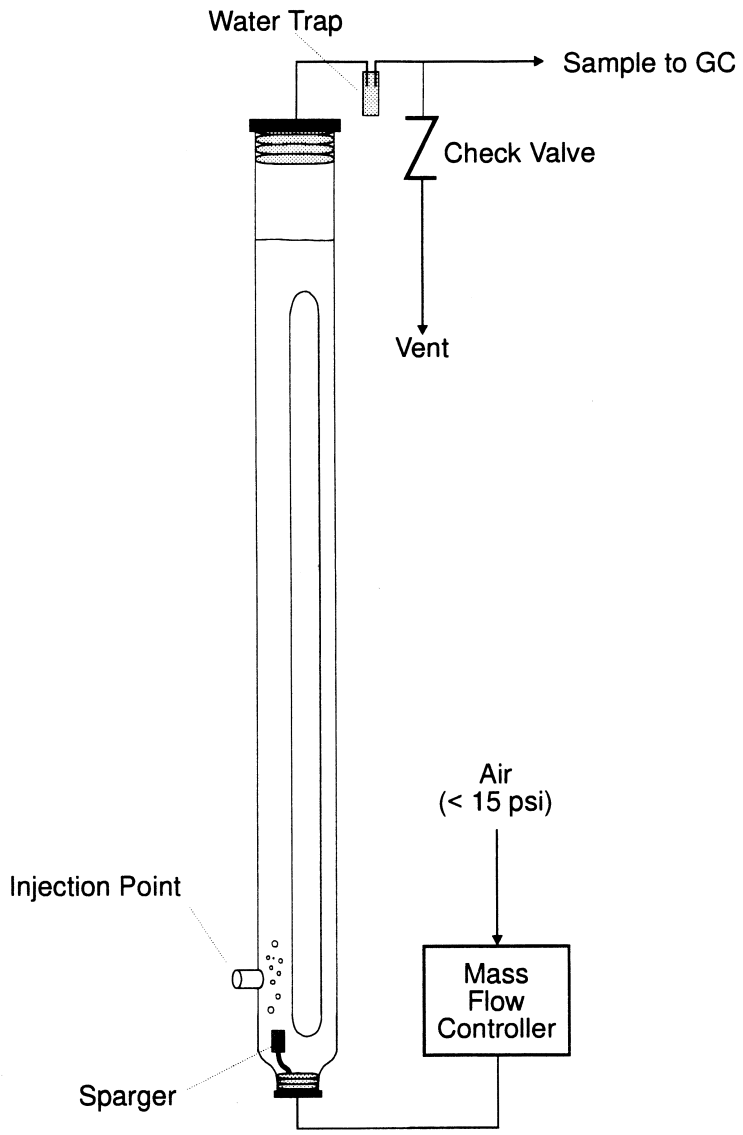


Figure 2. Example Aerated Draft Tube Reactor

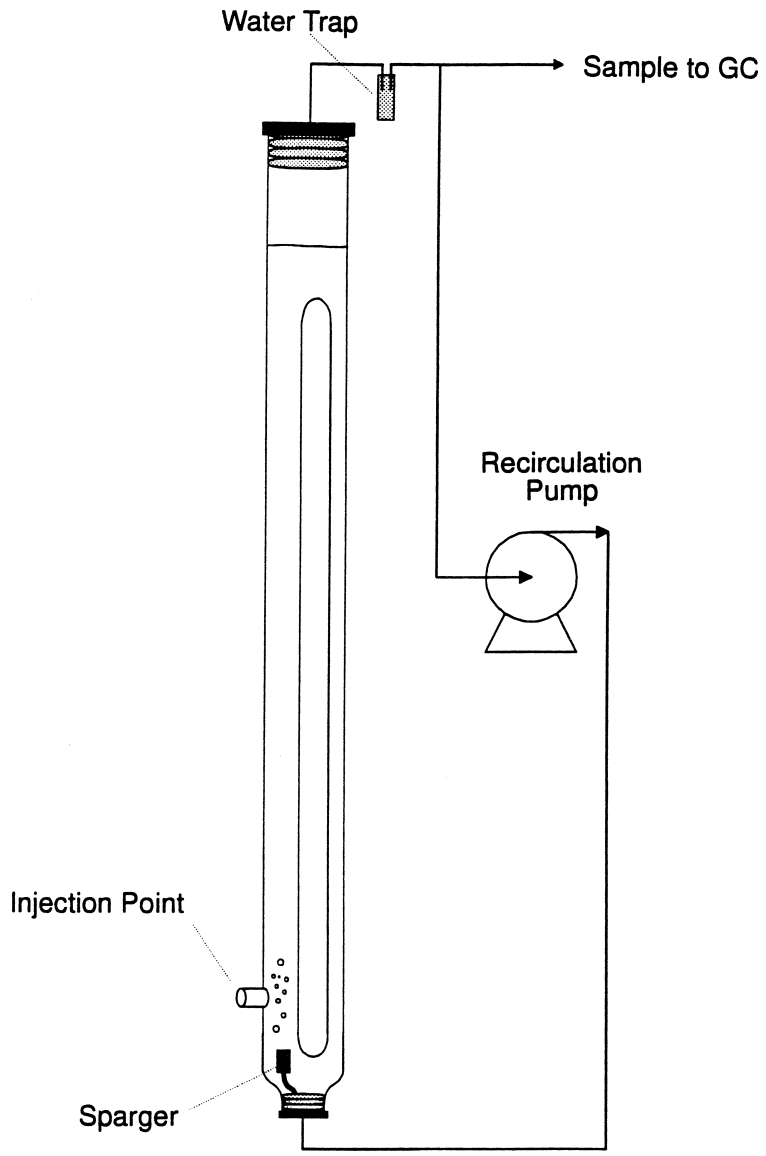


Figure 3. Example Sealed Draft Tube Reactor

| Form I DATA FORM FOR THE ESTIMATION OF THE EPA METHOD 304B FIRST ORDER BIORATE CONSTANT | | | |
|---|---|---|---|
| NAME OF THE FACILITY for site specific biorate determination | | | Example |
| COMPOUND for site specific biorate determination | | | *METHANOL* |
| INLET CONCENTRATION used in EPA METHOD 304B | 1 | | 78 |
| EXIT CONCENTRATION measured by EPA METHOD 304B | 2 | | 6 |
| BIOMASS (g/L) This is the dried solids that are obtained from the mixed liquor suspended solids in the bench scale bioreactor. | 3 | | 0.075 |
| TEMPERATURE OF BIOREACTOR (deg. C) | 4 | | 35 |
| VOLUME of EPA METHOD 304B bench scale bioreactor (L) | 5 | | 6 |
| FLOW RATE of waste treated in the bench scale bioreactor (L/hr) | 6 | | 0.146 |
| CALCULATIONS FROM EPA METHOD 304B DATA MEASUREMENTS | | | |
| RESIDENCE TIME (hr) Divide the number on line 5 by the number on line 6 and enter the results here. | 7 | | 41.10 |
| Concentration Decrease ($g/m^3$). Subtract the number on line 2 from the number on line 1 and enter the results here. | 8 | | 72.00 |
| BIORATE ($g/m^3$-hr). Divide the number on line 8 by the number on line 7 and enter the results here. | 9 | | 1.75 |
| Product of concentration and biomass. Multiply the number on line 2 by the number on line 3 and enter the results here. | 10 | | 0.45 |
| BIORATE K1 (L/g bio-hr) Divide the number on line 9 by the number on line 10 and enter the results here. | 11 | | 3.89 |
| Temperature adjustment. Subtract 25 deg. C from the number on line 4 and enter the results here. | 12 | | 10 |
| Temperature adjustment factor. 1.046 is the default temperature adjustment factor. Enter the temperature adjustment factor here. | 13 | | 1.046 |
| Biorate temperature ratio. Raise the number on line 13 to the power of the number on line 12. | 14 | | 1.567 |
| BIORATE K1 at 25 deg. C (L/g MLVSS-hr) Divide the number on line 11 by the number on line 14 and enter the results here. | 15 | | 2.48 |

Note: With Monod kinetics, use Kmax=1000 to convert the Monod kinetics to first order. If a different temperature adjustment factor than the default is entered on line 13, make sure that the adjustment factor used in the calculations agrees with the value entered on line 13.

| Form II | PROCEDURES FORM FOR THE ESTIMATION OF THE KL FROM UNIT SPECIFICATIONS | | |
|---|---|---|---|
| NAME OF THE FACILITY for site specific biorate determination | | | |
| NAME OF UNIT for site specific biorate determination | | | |
| NAME OF COMPOUND | | | |
| HENRY'S LAW constant for the compound (mole fraction in gas per mole fraction in water at 25 degrees Celsius) | | | |
| IDENTIFY THE TYPE OF UNIT | | | (check one box below) |
| | Quiescent impoundment | 1 | |
| | Surface agitated impoundment | 2 | |
| | Surface agitated impoundment with submerged air | 3 | |
| | Unit agitated by submerged aeration gas | 4 | |
| | EPA Method 304A, Covered unit, UNOX system, or bench scale reactor | 5 | |

PROCEDURES BASED UPON THE TYPE OF UNIT

| UNIT | PROCEDURE TO FOLLOW |
|---|---|
| 1 | Use the quiescent impoundment model to determine KL. Use Kq as KL as determined from Form VII. |
| 2 | Use the quiescent impoundment model to determine KL for the quiescent zone, Form VII. Use the aerated impoundment model to determine KL for the agitated surface, Form VIII. |
| 3 | Use the quiescent impoundment model to determine Kq for the quiescent zone, Form VII. Use the aerated impoundment model to determine KL for the agitated surface, Form VIII. The total system KL is the sum of the KL from Form VIII and the equivalent KL from Form V. Use the submerged air rate as the vent rate in form V. |
| 4 | Use the aerated impoundment model to determine KL if the surface is agitated. Use the quiescent impoundment model if the surface is not agitated. KL includes the effect of volatilization in the air discharge. See section 5.6.1 in AIR EMISSIONS MODELS FOR WASTE AND WASTEWATER (EPA-453/R-94-080A). The total system KL is the sum of the KL from Form VIII and the equivalent KL from Form V. Use the submerged air rate as the vent rate in Form V. |
| 5 | KL for the surface is assumed to be equal zero. Determine equivalent KL based upon air discharge. Use Form V for EPA Method 304A or if the concentration in the vent is not measured. Use Form V-A if the concentration in the vent is measured. |

| | | |
|---|---|---|
| Estimate of KL obtained from above procedures (m/s) | 6 | |

| Form II-A | PROCEDURES FORM FOR THE ESTIMATION OF THE KL FROM WATER 7 | | |
|---|---|---|---|
| NAME OF THE FACILITY for site specific biorate determination | | | |
| NAME OF UNIT for site specific biorate determination | | | |
| NAME OF COMPOUND | | | |
| HENRY'S LAW COMPOUND | | | |
| IDENTIFY THE TYPE OF UNIT | | | (check one box below) |
| | Quiescent impoundment | 1 | |
| | Surface agitated impoundment | 2 | |
| | Surface agitated impoundment with submerged air | 3 | |
| | Unit agitated by submerged aeration gas | 4 | |
| | Covered unit, UNOX system, bench scale reactor | 5 | |

PROCEDURES BASED UPON THE TYPE OF UNIT

| unit | procedure to follow |
|---|---|
| 1 | Use the quiescent impoundment model to determine KL. |
| 2 | Use the aerated impoundment model to determine KL for the combined agitated surfaces and quiescent surfaces. |
| 3 | Use the aerated impoundment model to determine KL for the combined agitated surfaces and quiescent surfaces. |
| 4 | Use the aerated impoundment model to determine KL if the surface is agitated. Use the quiescent impoundment model if the surface is not agitated. KL includes the effect of volatilization in the air discharge. See section 5.6.1 in AIR EMISSIONS MODELS FOR WASTE AND WASTEWATER (EPA-453/R-94-080A). |
| 5 | KL for the surface is assumed to equal zero. Select the covered unit option with the aerated impoundment model. |

| Form III DATA FORM FOR THE ESTIMATION OF THE COMPOUND FRACTION BIODEGRADED AND AIR EMISSIONS | | | |
|---|---|---|---|
| NAME OF THE FACILITY for site specific biorate determination | | | example |
| COMPOUND for site specific biorate determination | | | *methanol* |
| ESTIMATE OF K1 from Form I line 11, Form V line 15, Form V-A line 15, Form IV line 14, Form VI line 13, or Form XII line 9. (L/g MLVSS-hr) | 1 | | 3.89 |
| BIOMASS (g/L) This is the dried solids that are obtained from the mixed liquor suspended solids in the full-scale bioreactor. | 2 | | 2.4 |
| VOLUME of full-scale system (cubic meters) | 3 | | 2700 |
| AREA of the liquid surface of the full-scale system (square meters) | 4 | | 1500 |
| ESTIMATE OF KL from Form II, II-A, IV, V, V-A, or V-B (m/s) | 5 | | 0.0000036 |
| FLOW RATE of waste treated in full-scale bioreactor ($m^3/s$) | 6 | | 0.1565 |
| CALCULATIONS FROM ESTIMATES OF K1 AND KL | | | |
| BIORATE ($m^3/s$) Multiply the numbers on lines 1, 2, and 3 together and divide the results by 3600. Enter the results here. | 7 | | 7.0020000 |
| AIR STRIPPING ($m^3/s$). Multiply the numbers on lines 4 and 5 together. Enter the results here. | 8 | | 0.0054000 |
| EFFLUENT DISCHARGE ($m^3/s$). Enter the number on line 6 here. | 9 | | 0.1565000 |
| TOTAL of the three loss mechanisms. Add the numbers on lines 7, 8, and 9. Enter the results here. | 10 | | 7.1639000 |
| Fraction biodegraded: Divide the number on line 7 by the number on line 10 and enter the results here. | 11 | | 0.9774006 |
| Fraction air emissions: Divide the number on line 8 by the number on line 10 and enter the results here. | 12 | | 0.0007538 |
| Fraction remaining in unit effluent: Divide the number on line 9 by the number on line 10 and enter the results here. | 13 | | 0.0218456 |
| Total: add the numbers on lines 11, 12, and 13. The sum should equal 1.0 | 14 | | 1.0000000 |

| Form IV DATA FORM FOR THE ESTIMATION OF K1 AND KL FROM FULL SCALE UNIT DATA WITH AND WITHOUT BIODEGRADATION | | | |
|---|---|---|---|
| For a general discussion of this approach, see Air Emissions Models for Waste and Wastewater, EPA-453/R-94-080A, Chapter 5, November 1994. | | | |
| NAME OF THE FACILITY for site specific biorate determination | | | example |
| COMPOUND for site specific biorate determination | | | *methanol* |
| BIOMASS (g/L) This is the dried solids that are obtained from the mixed liquor suspended solids in the full-scale bioreactor. | 1 | | 2.4 |
| VOLUME of full-scale system (cubic meters) | 2 | | 2700 |
| AREA of the liquid surface of the full-scale system (square meters) | 3 | | 1500 |
| INLET CONCENTRATION of compound (g/m$^3$ or ppmw) | 4 | | 133.5 |
| EXIT CONCENTRATION of compound (g/m$^3$ or ppmw) | 5 | | 10.57 |
| EXIT CONCENTRATION (NO BIODEGRADATION) of compound (g/m$^3$ or ppmw) | 6 | | 133 |
| FLOW RATE of waste treated in the full-scale bioreactor (m$^3$/s) | 7 | | 0.1565 |
| ESTIMATES OF K1 AND KL FROM FIELD DATA WITH AND WITHOUT BIODEGRADATION | | | |
| REMOVAL WITH BIODEGRADATION (g/s) Subtract the number on line 5 from the number on line 4 and multiply the results by the number on line 7. Enter the results here. | 8 | | 19.238545 |
| REMOVAL WITHOUT BIODEGRADATION (g/s) Subtract the number on line 6 from the number on line 4 and multiply the results by the number on line 7. Enter the results here. | 9 | | 0.078250 |
| KL A ESTIMATE (m$^3$/s) Divide the number on line 9 by the number on line 6. Enter the results here. | 10 | | 0.000588 |
| K1 B V + KL A ESTIMATE (m$^3$/s) . Divide the number on line 8 by the number on line 5. Enter the results here. | 11 | | 1.820108 |
| K1 B V ESTIMATE (m$^3$/s) Subtract the number on line 10 from the number on line 11. Enter the results here. | 12 | | 1.819520 |
| Product of B and V. Multiply the number on line 1 by the number on line 2 and enter the results here. | 13 | | 6480 |
| K1 ESTIMATE (L/gMLVSS-hr) Divide the number on line 12 by the number on line 13 and multiply by 3600 s/hr. Enter the results here. | 14 | | 1.010844 |
| KL ESTIMATE (m/s) Divide the number on line 10 by the number on line 3. Enter the results here. | 15 | | 0.0000004 |

| Form V DATA FORM FOR THE ESTIMATION OF K1 FOR EPA METHOD 304A OR FROM A COVERED, VENTED BIODEGRADATION UNIT. | | | |
|---|---|---|---|
| For a general discussion of this approach, see Air Emissions Models for Waste and Wastewater, EPA-453/R-94-080A, Chapter 5, November 1994 | | | |
| NAME OF THE FACILITY for site specific biorate determination | | | example |
| COMPOUND for site specific biorate determination | | | *methanol* |
| BIOMASS (g/L) This is the dried solids that are obtained from the mixed liquor suspended solids in the unit. | 1 | | 0.075 |
| VENT RATE of total gas leaving the unit (G, $m^3/s$) | 2 | | 1 |
| TEMPERATURE of the liquid in the unit (deg. C) | 3 | | 25 |
| INLET CONCENTRATION of compound ($g/m^3$ or ppmw) | 4 | | 100 |
| EXIT CONCENTRATION of compound ($g/m^3$ or ppmw) | 5 | | 5 |
| ESTIMATE OF Henry's law constant (H, $g/m^3$ in gas / $g/m^3$ in liquid). Obtained from Form IX | 6 | | 0.00021 |
| AREA OF REACTOR ($m^2$) | 7 | | 3400 |
| VOLUME OF REACTOR ($m^3$) | 8 | | 10000 |
| FLOW RATE of waste treated in the unit ($m^3/s$) | 9 | | 0.146 |
| CALCULATION OF THE ESTIMATE OF K1 | | | |
| TOTAL REMOVAL (g/s) Subtract the number on line 5 from the number on line 4 and multiply the result by the number on line 9. Enter the results here. | 10 | | 13.870000 |
| [H G] ESTIMATE ($m^3/s$) Multiply the number on line 2 by the number on line 6. Enter the results here. | 11 | | 0.000021 |
| [K1 B V + H G] ($m^3/s$) Divide the number on line 10 by the number on line 5. Enter the results here. | 12 | | 2.774000 |
| [K1 B V] ESTIMATE ($m^3/s$) Subtract the number on line 11 from the number on line 12. Enter the results here. | 13 | | 2.773979 |
| If the number on line 11 is greater than the number on line 13, this procedure cannot be used to demonstrate that the compound is biodegradable. Do not complete lines 14 and 15. | | | |
| Product of B and V. Multiply the number on line 1 by the number on line 8 and enter the results here. | 14 | | 750.000000 |
| K1 ESTIMATE (L/g MLVSS-hr) Divide the number on line 13 by the number on line 14 and multiply by 3600 s/hr. Enter the results here. | 15 | | 13.315099 |
| EQUIVALENT KL. Divide the number on line 11 by the number on line 7. Enter the results on line 16. | 16 | | 6.18e-09 |

This form may be used to estimate the Equivalent KL with input data for lines 2, 6, and 7.

| Form V-A DATA FORM FOR THE CALCULATION OF K1 FROM A COVERED, VENTED BIODEGRADATIN UNIT. THE VENT CONCENTRATION IS MEASURED. | | | |
|---|---|---|---|
| For a general discussion of this approach, see Air Emissions Models for Waste and Wastewater, EPA-453/R-94-080A, Chapter 5, November 1994. | | | |
| NAME OF THE FACILITY for site specific biorate determination | | | example |
| COMPOUND for site specific biorate determination | | | *methanol* |
| BIOMASS (g/L) This is the dried solids that are obtained from the mixed liquor suspended solids in the unit. | 1 | | 0.075 |
| VENT RATE of total gas leaving the unit (G, $m^3/s$) | 2 | | .1 |
| TEMPERATURE of the liquid in the unit (deg. C) | 3 | | 25 |
| INLET CONCENTRATION of compound (Ci, $g/m^3$ or ppmw) | 4 | | 100 |
| EXIT CONCENTRATION of compound (Ce, $g/m^3$ or ppmw) | 5 | | 5 |
| VENT CONCENTRATION of compound (Cv, $g/m^3$) | 6 | | 0.001 |
| AREA OF REACTOR SURFACE ($m^2$) | 7 | | 3400 |
| VOLUME OF REACTOR ($m^3$) | 8 | | 10000 |
| FLOW RATE of waste treated in the unit ($m^3/s$) | 9 | | 0.146 |
| CALCULATION OF THE ESTIMATE OF K1 | | | |
| TOTAL REMOVAL (g/s) Subtract the number on line 5 from the number on line 4 and multiply the results by the number on line 9. Enter the results here. | 10 | | 13.87 |
| [ G Cv/Ce] ESTIMATE ($m^3/s$) Multiply the number on line 2 by the number on line 6 and divide by the number on line 5. Enter the results here. | 11 | | 0.000020 |
| [K1 B V + G Cv/Ce] ($m^3/s$) Divide the number on line 10 by the number on line 5. Enter the results here. | 12 | | 2.77 |
| [K1 B V] ESTIMATE ($m^3/s$) Subtract the number on line 11 from the number on line 12. Enter the results here. | 13 | | 2.77 |
| If the number on line 11 is greater than the number on line 13, this procedure cannot be used to demonstrate that the compound is biodegradable. Do not complete lines 14 and 15. | | | |
| Product of B and V. Multiply the number on line 1 by the number on line 8 and enter the results here. | 14 | | 750.00 |
| K1 ESTIMATE (L/g MLVSS-hr) Divide the number on line 13 by the number on line 14 and multiply by 3600 s/hr. Enter the results here. | 15 | | 13.30 |
| EQUIVALENT KL. Divide the number on line 11 by the number on line 7. Enter the results here. | 16 | | 5.9e-09 |

This form may be used to calculate the Equivalent KL with input data for lines 2, 5, 6, and 7.

| Form V-B DATA FORM FOR THE CALCULATION OF EQUIVALENT KL FROM A VENTED BIODEGRADATIN UNIT WITH AN AIR SUPPORTED COVER. THE VENT CONCENTRATION IS MEASURED. | | | |
|---|---|---|---|
| NAME OF THE FACILITY for site specific biorate determination | | | example |
| COMPOUND for site specific biorate determination | | | *methanol* |
| Vent rate of total gas entering the cover ($m^3/s$) | 1 | | 120 |
| Vent rate of total gas leaving the cover transferred to a control device ($m^3/s$) | 2 | | 100 |
| TEMPERATURE of the liquid in the unit (deg. C) | 3 | | 25 |
| Area of air supported cover ($m^2$) | 4 | | 1950 |
| Permeability through the cover (cm/s) | 5 | | 5E-6 |
| VENT CONCENTRATION of compound ( $g/m^3$) | 6 | | 0.0022 |
| EXIT CONCENTRATION of compound ( $g/m^3$ or ppmw) | 7 | | 10.57 |
| AREA OF REACTOR SURFACE ($m^2$) | 8 | | 1500 |
| Performance of vent control device (% control) | 9 | | 95 |
| CALCULATION OF THE ESTIMATE OF EQUIVALENT KL | | | |
| Loss of forced air in the cover due to leakage. ($m^3/s$) Subtract the number on line 2 from the number on line 1. Enter the results here. | 10 | | 20 |
| Loss of compound in forced air (g/s) Multiply the number on line 10 by the number on line 6. Enter the results here. | 11 | | 0.044 |
| Loss of compound by permeation through cover (g/s). Line 4 times line 5, line 6, and divide by 100. Enter the results here. | 12 | | 0 |
| Loss of compound by permeation through vent (g/s). Line 2 times line 6. Enter the results here. | 13 | | 0.22 |
| Treatment of compound in control device (g/s). Line 13 times line 9, divided by 100. Enter the results here. | 14 | | 0.209 |
| Total removal from air phase (g/s). Sum of 11, 12, and 13. | 15 | | 0.264 |
| Total treatment effectiveness (%) Line 14 divided by 15 times 100. | 16 | | 79.1666 |
| [G Cv/Ce] ESTIMATE ($m^3/s$) Divide line 15 by line 7. | 17 | | 0.025 |
| EQUIVALENT KL. Divide the number on line 17 by line 8. | 18 | | 1.67e-05 |

The permeability is the ratio of the flux ($g/cm^2$) to the gas concentration ($g/cm^3$).
If the gas is generated by the unit, the gas entering the cover may be estimated from an estimate of the cover leak rate and the total gas transferred to the control device.

| Form VI DATA FORM FOR THE ESTIMATION OF K1 FROM FULL SCALE UNIT DATA WITH BIODEGRADATION | | | |
|---|---|---|---|
| NAME OF THE FACILITY for site specific biorate determination | | | example |
| COMPOUND for site specific biorate determination | | | *methanol* |
| BIOMASS (g/L) This is the dried solids that are obtained from the mixed liquor suspended solids in the full-scale bioreactor. | 1 | | 0.075 |
| VOLUME of full-scale system (cubic meters) | 2 | | 100000 |
| AREA of the liquid surface of the full-scale system (square meters) | 3 | | 10000 |
| INLET CONCENTRATION of compound (g/m$^3$ or ppmw) | 4 | | 100 |
| EXIT CONCENTRATION of compound (g/m$^3$ or ppmw) | 5 | | 5 |
| ESTIMATE OF KL from Form II (m/s) | 6 | | 0.00001 |
| FLOW RATE of waste treated in the full-scale bioreactor (m$^3$/s) | 7 | | 0.146 |
| CALCULATION OF THE ESTIMATE OF K1 FROM FIELD DATA | | | |
| REMOVAL WITH BIODEGRADATION (g/s) Subtract the number on line 5 from the number on line 4 and multiply the results by the number on line 7. Enter the results here. | 8 | | 13.87 |
| [KL A] ESTIMATE (m$^3$/s) Multiply the number on line 3 by the number on line 6. Enter the results here. | 9 | | 0.10 |
| [K1 B V + KL A] (m$^3$/s) Divide the number on line 8 by the number on line 5. Enter the results here. | 10 | | 2.774 |
| [K1 B V] ESTIMATE (m$^3$/s) Subtract the number on line 9 from the number on line 10. Enter the results here. | 11 | | 2.674 |
| Product of B and V. Multiply the number on line 1 by the number on line 2 and enter the results here. | 12 | | 7500 |
| K1 ESTIMATE (L/g MLVSS-hr) Divide the number on line 11 by the number on line 12 and multiply by 3600 s/hr. Enter the results here. | 13 | | 1.28352 |

**FORM VII**

DATA FORM FOR CALCULATING THE
MASS TRANSFER COEFFICIENT FOR A QUIESCENT SURFACE IMPOUNDMENT

Facility Name: _____

Waste Stream Compound: _____

Enter the following:

F - Impoundment fetch (m) _____
D - Impoundment depth (m) _____
$U_{10}$ - Windspeed 10 m above liquid surface (m/s) _____
$D_w$ - Diffusivity of compound in water ($cm^2/s$) _____
$D_{ether}$ - Diffusivity of ether in water ($cm^2/s$) _____
$\mu_G$ - Viscosity of air, (g/cm-s) _____
$\rho_G$ - Density of air, ($g/cm^3$) _____
$D_a$ - Diffusivity of compound in air, ($cm^2/s$) _____
A - Area of impoundment, ($m^2$) _____
H - Henry's law constant, (atm-$m^3$/g mol) _____
R - Universal gas constant, (atm-$m^3$/g mol. °K) _____
$\mu_L$ - Viscosity of water, (g/cm-s) _____
$\rho_L$ - Density of liquid, ($g/cm^3$) _____
T - Impoundment temperature, (°C) _____

Calculate the following:

Calculate F/D: _____

A. Calculate the liquid phase mass transfer coefficient, $k_L$, using one of the following procedures, (m/s)

1. Where F/D < 14 and $U_{10}$ > 3.25 m/s, use the following procedure from MacKay and Yeun:

Calculate the Schmidt number on the liquid side, $Sc_L$, as follows:
$Sc_L = \mu_L/\rho_L D_w$ _____

Calculate the friction velocity, $U^*$, as follows, (m/s):
$U^* = 0.01 \times U_{10}(6.1 + 0.63\ U_{10})^{0.5}$ _____

Where $U^*$ is > 0.3, calculate $k_L$ as follows:
$k_L = (1.0 \times 10^{-6}) + (34.1 \times 10^{-4})U^* \times Sc_L^{-0.5}$ _____

Where $U^*$ is < 0.3, calculate $k_L$ as follows:
$k_L = (1.0 \times 10^{-6}) + (144 \times 10^{-4})(U^*)^{2.2} \times Sc_L^{-0.5}$ _____

2. For all other values of F/D and $U_{10}$, calculate $k_L$ using the following procedure from Springer:[1]

[1]Springer, C., P. D. Lunney, and K. T. Valsaraj. Emission of Hazardous Chemicals from Surface and Near Surface Impoundments to Air. U.S. Environmental Protection Agency, Solid and Hazardous Waste Research Division. Cincinnati, OH. Project Number 808161-02. December 1984.

Where $U_{10}$ is < 3.25 m/s, calculate $k_L$ as follows:
$k_L = 2.78 \times 10^{-6}(D_w/D_{ether})^{2/3}$ _____

Where $U_{10}$ is > 3.25 and 14 < F/D < 51.2, Calculate $k_L$ as follows:
$k_L = [2.605 \times 10^{-9}(F/D) + 1.277 \times 10^{-7}]\ U_{10}^2\ (D_w/D_{ether})^{2/3}$ _____

Where $U_{10}$ > 3.25 m/s and F/D > 51.2, calculate $k_L$ as follows:
$k_L = (2.611 \times 10^{-7})U_{10}^2\ (D_w/D_{ether})^{2/3}$ _____

B. Calculate the gas phase mass transfer coefficient, $k_G$, using the following procedure from MacKay and Matsasugu, (m/s):[2]

Calculate the Schmidt number on the gas side, $Sc_G$, as follows: $Sc_G = \mu_G/\rho_G D_a$ _____

Calculate the effective diameter of the impoundment, $d_e$, as follows, (m):
$d_e = (4A/\pi)^{0.5}$ _____

Calculate $k_G$ as follows, (m/s): $k_G = 4.82 \times 10^{-3}\ U_{10}^{0.78}\ Sc_G^{-0.67}\ d_e^{-0.11}$ _____

C. Calculate the partition coefficient, Keq, as follows: Keq = H/[R(T+273)]

_____

D. Calculate the overall mass transfer coefficient, $K_q$, as follows, (m/s):
$1/K_q = 1/k_L + 1/Keq\text{-}k_G$ _____

Where the total impoundment surface is quiescent:
$KL = K_q$

Where a portion of the impoundment surface is turbulent, continue with Form VIII.

[2]Hwang, S. T. Toxic Emissions from Land Disposal Facilities. Environmental Progress. 1:46-52. February 1982.

**FORM VIII**

DATA FORM FOR CALCULATING THE
MASS TRANSFER COEFFICIENT FOR AN AERATED SURFACE IMPOUNDMENT

Facility Name: _____

Waste Stream Compound: _____

Enter the following:

J - Oxygen transfer rating of surface aerator, (lb $O_2$/hr-hp) _____
POWR - Total power to aerators, (hp) _____
T - Water temperature, (°C) _____
$O_t$ - Oxygen transfer correction factor _____
$MW_L$ - Molecular weight of liquid _____
$A_t$ - Turbulent surface area of impoundment, ($ft^2$) _____
(If unknown, use values from Table 1)
A - Total surface area of impoundment, ($ft^2$) _____
$\rho_L$ - Density of liquid, ($lb/ft^3$) _____
$D_w$ - Diffusivity of constituent in water, ($cm^2/s$) _____
$D_{O_2,w}$ - Diffusivity of oxygen in water, ($cm^2/s$) _____

d - Impeller diameter, (cm) _____
w - Rotational speed of impeller, (rad/s) _____
$\rho_a$ - Density of air, ($gm/cm^3$) _____
N - Number of aerators _____
$g_c$ - Gravitation constant, ($lb_m$-$ft/s^2/lb_f$) _____
$d^*$ - Impeller diameter, (ft) _____
$D_a$ - Diffusivity of constituent in air, ($cm^2/s$) _____
$MW_a$ - Molecular weight of air _____
R - Universal gas constant, (atm-$m^3$/g mol. °C) _____
H = Henry's law constant, (atm-$m^3$/g mol) _____

Calculate the following:

A. Calculate the liquid phase mass transfer coefficient, $k_L$, using the following Equation from Thibodeaux:[3],[4]

$$k_L = [8.22 \times 10^{-9}\ J\ (POWR)(1.024)^{T-20}\ O_t\ 10^6\ MW_L/(Va_v\rho_L)]\ (D_w/\ D_{O_2,w})^{0.5},\ (m/s)$$

_____

[3]GCA Corporation. Emissions Data and Model Review for Wastewater Treatment Operations. Draft Technical Note. Prepared for U.S. Environmental Protection Agency. Contract No. 68-01-6871, Assignment 49. August 1985. p. 4-2.

[4]Hwang, S. T. Toxic Emissions from Land Disposal Facilities. Environmental Progress. 1:46-52. February 1982.

B. Calculate the gas phase mass transfer coefficient, $k_G$, using the following procedure from Reinhardt:[5,6]

Calculate the viscosity of air, $\mu_a$, as follows, (g/cm.s):
$\mu_a = 4.568 \times 10^{-7}\ T + 1.7209 \times 10^{-4}$ _____

Calculate the Reynold's number as follows:
$R_e = d^2 w \rho_a / \mu_a$ _____

Calculate power to impeller, $P_I$, as follows, ($ft.lb_f/s$):
$P_I = 0.85\ (POWR)\ 550/N$ _____

Calculate the power number, p, as follows:
$p = P_I\ g_c / (\rho_L d^{*5}\ w^3)$ _____

Calculate the Schmidt number, $Sc_G$, as follows:
$Sc_G = \mu_a / \rho_a D_a$ _____

Calculate the Fronde number, $F_r$, as follows:
$F_r = d^* w^2 / g_c$ _____

Calculate $k_G$ as follows:
$k_G = 1.35 \times 10^{-7}\ R_e^{1.42}\ p^{0.4}\ Sc_G^{0.5}\ F_r^{-0.21}\ D_a MW_a / d$, (m/s) _____

C. Calculate the partition coefficient, Keq, as follows:
$Keq = H/[R(T+273)]$ _____

D. Calculate the overall turbulent mass transfer coefficient, $K_t$, as follows, (m/s):
$1/K_t = 1/k_L + 1/Keq.k_G$ _____

E. Calculate the quiescent mass transfer coefficient, $K_q$, for the impoundment using Form VII.
_____

F. Calculate the overall mass transfer coefficient, KL, for the impoundment as follows:

$$KL = \frac{K_q(A-A_t) + K_t A_t}{A}$$ _____

[5]GCA Corporation. Emissions Data and Model Review for Wastewater Treatment Operations. Draft Technical Note. Prepared for U.S. Environmental Protection Agency. Contract No. 68-01-6871, Assignment 49. August 1985. p. 4-3.

[6]Reinhardt, J. R. Gas-Side Mass-Transfer Coefficient and Interfacial Phenomena of Flat-Bladed Surface Agitators. Ph.D. dissertation, University of Arkansas, Fayetteville, Ar. 1977. p. 48.

Table 1. Turbulent Areas and Volumes for Surface Agitators[a]

| ω, Motor horsepower, hp | $A_t$, Turbulent area, | | Effective depth, ft | V, Agitated volume, $ft^3$ | $a_V$, Area per volume $ft^2/ft^3$ |
|---|---|---|---|---|---|
| | $ft^2$ | $m^2$ | | | |
| 5 | 177 | 16.4 | 10 | 1,767 | 0.100 |
| 7.5 | 201 | 18.7 | 10 | 2,010 | 0.100 |
| 10 | 227 | 21 | 10.5 | 2,383 | 0.0952 |
| 15 | 284 | 26.4 | 11 | 3,119 | 0.0909 |
| 20 | 346 | 32.1 | 11.5 | 3,983 | 0.0870 |
| 25 | 415 | 38.6 | 12 | 4,986 | 0.0833 |
| 30 | 491 | 45.7 | 12 | 5,890 | 0.0833 |
| 40 | 661 | 61.4 | 13 | 8,587 | 0.0769 |
| 50 | 855 | 79.5 | 14 | 11,970 | 0.0714 |
| 60 | 1,075 | 100 | 15 | 16,130 | 0.0666 |
| 75 | 1,452 | 135 | 16 | 23,240 | 0.0625 |
| 100 | 2,206 | 205 | 18 | 39,710 | 0.0555 |

[a]Data for a high speed (1,200) rpm) aerator with 60 cm propeller diameter (d).

| Form IX DATA FORM FOR THE ESTIMATION OF THE HENRY'S LAW CONSTANT FOR A COMPOUND IN THE BIOLOGICAL TREATMENT UNIT | | | |
|---|---|---|---|
| NAME OF THE FACILITY for site specific biorate determination | | | example |
| COMPOUND for site specific biorate determination | | | *methanol* |
| LISTED HENRY'S LAW VALUE AT 25 degrees Celsius. (Table 1, ratio of mol fraction in gas to mole fraction in water) | 1 | | .2885 |
| TEMPERATURE of the liquid in the unit (deg.C) | 2 | | 25 |
| CALCULATION OF K | | | |
| Temperature adjusted Henry's law value (equals the value on line 1 if the temperature on line 2 is 25) | 3 | | 0.2885 |
| Discuss basis of temperature adjustment | | | |
| Temperature in degrees Kelvin. Add 273.16 to the number on line 2. Enter the results here. | 4 | | 298.1600 |
| Temperature ratio. Divide 273.16 by the number on line 4. Enter the results here. | 5 | | 0.9162 |
| Henry's Law adjustment factor. Multiply the number on line 5 by 0.804 and enter the results here. | 6 | | 0.7366 |
| Henry's Law value (g/m3 gas per g/m3 liquid) Multiply the number on line 3 by the number on line 6 and divide the results by 1000. Enter the results here and on Form V line 6. | 7 | | 0.000213 |
| Henry's Law value (atm m3 per mol ) Divide the number on line 3 by 55555 and enter the results here. | 8 | | 0.000005 |

Form X **DATA FORM FOR THE CALCULATION OF THE HENRY'S LAW CONSTANT FOR A COMPOUND IN A SEALED BATCH TEST**

| | | | |
|---|---|---|---|
| NAME OF THE FACILITY for site specific biorate determination | | | example |
| COMPOUND for site specific biorate determination | | | *methanol* |
| REACTOR HEADSPACE VOLUME, (L) | 1 | | 1 |
| REACTOR LIQUID VOLUME (L) | 2 | | 10 |
| TEMPERATURE of the liquid in the unit (deg.C) | 3 | | 25 |

Wastewater compounds are biodegraded by biomass in a sealed batch test. For the compound listed above, a data set of liquid and gas concentrations is measured at four different times during the sealed batch test. The data are entered below, and the ratio of the concentrations for each data set is entered in column E.

| A | B | C | D | E | |
|---|---|---|---|---|---|
| Data set | Time (hr) | Liquid Conc. (mg/L) | Gas Conc. (mg/L) | $K_{eq}$ D/C | .0002108 |
| 1 | | | | | |
| 2 | | | | | |
| 3 | | | | | |
| 4 | | | | | |

| | | | |
|---|---|---|---|
| Temperature in degrees Kelvin. Add 273.16 to the number on line 3. Enter the results here | 4 | | 298.16 |
| Molar ratio. Multiply the number on line 4 by 4.555. Enter the results on line 5. | 5 | | 1,358.12 |
| Henry's law value (mg/L gas per mg/L liquid). Enter the average value in column E above on line 6. | 6 | | 0.000211 |
| Henry's law value (mole fraction gas per mole fraction liquid) Multiply the number on line 6 by the number on line 5. Enter the results on line 7. | 7 | | 0.286563 |
| Expected Henry's law value. Enter the number from Form IX line 3. | 8 | | 0.288500 |

Precision: Discuss any variability of the numbers in column E.
Accuracy: Discuss any difference between the numbers on line 7 and line 8. Identify which value will be used for evaluating the biodegradation rate data. Divide the Henry's law value by the number on line 5 and enter the results on line 9.

| | | | |
|---|---|---|---|
| $K_{eq}$ value (mg/L gas per mg/L liquid) | 9 | | 0.000211 |
| HEADSPACE CORRECTION FACTOR. Divide the number on line 2 by the sum of the number on line 2 and the product of the numbers on line 9 and line 1. Enter the result on line 10. | 10 | | 0.999979 |

The headspace correction factor should equal approximately 1 if the headspace is relatively small. Reducing the headspace volume may improve the test data quality if the headspace correction factor is substantially less than one.

Form XI

**DATA FORM FOR THE CALCULATION OF THE HENRY'S LAW CONSTANT AND THE STRIPPING CONSTANT FOR A COMPOUND IN AN AERATED BATCH TEST**

| | | | |
|---|---|---|---|
| NAME OF THE FACILITY for site specific biorate determination | | | example |
| COMPOUND for site specific biorate determination | | | *methanol* |
| Concentration basis (liquid or gas) | | | gas |
| TEMPERATURE of the liquid in the unit (deg.C) | 1 | | 25 |
| GAS FLOW RATE (L/hr) | 2 | | 1 |
| LIQUID VOLUME (L) | 3 | | 10 |
| Co concentration measurement at time=0 (mg/L) | 4 | | |

| A | B | C | D | E |
|---|---|---|---|---|
| data point | time (hr) | Concentration, C (mg/L) | C/Co | -ln(C/Co) |
| 1 | | | | |
| 2 | | | | |
| 3 | | | | |
| 4 | | | | |
| 5 | | | | |

CALCULATIONS. Use additional lines as needed in an expansion of the above table. Plot the values in column E (y axis) vs the data in column B (x axis). Reject outliers. Curve fit with a straight line. Calculate the slope and enter the slope on line 7. Attach the plot and table to this form.

| | | | |
|---|---|---|---|
| Temperature in degrees Kelvin. Add 273.16 to the number on line 1. Enter the results here | 5 | | 298.16 |
| MOLAR RATIO. Multiply the number on line 5 by 4.555. Enter the results on line 6. | 6 | | 1,358.12 |
| Slope of the plot of -ln(C/Co) vs time (per hour) | 7 | | 2.10e-05 |
| Calculated $K_{eq}$ value (mg/L gas per mg/L liquid). Divide the number on line 7 by the number on line 2 and multiply the results by the number on line 3. Enter the results on line 8. | 8 | | 0.000210 |
| Expected $K_{eq}$ value. Divide the number from Form IX line 3 by the number on line 6 and enter the results on line 9. | 9 | | 0.000212 |

Discuss any differences between the numbers on line 8 and line 9. Identify which value will be used for the evaluation of the stripping constant (line 10). Problems can sometimes be resolved by system redesign, changing the bubble size, or confirming the experimental value of $K_{eq}$ by using Form X.

| | | | |
|---|---|---|---|
| $K_{eq}$ value (mg/L gas per mg/L liquid) | 10 | | 0.000210 |
| STRIPPING CONSTANT(per hour). Divide the number on line 10 by number on line 3 and multiply by the number on line 2. Enter the final result on line 11. | 11 | | 0.000021 |

The headspace correction factor equals one for an aerated batch test.

Form XII **DATA FORM FOR THE CALCULATION OF BATCH RATES AND THE DETERMINATION OF THE MONOD CONSTANTS**

Complete this table with measured liquid concentrations from the batch test. If headspace concentrations were measured and equilibrium has been verified, convert them to liquid concentrations by using $K_{eq}$. If the data are scattered, plot the concentration vs. time data, and fit the data with a curve based on Equation Appendix C-4 for the Aerated Batch test or Equation Appendix C-6 for the Sealed Batch test. Complete this form with concentrations obtained from that fitted curve. If the curve fitting approach is used, attach a plot of the data and the associated fitted curve to this form. Note: If the initial results appear to be anomalous, do not use the initial results.

| | | | |
|---|---|---|---|
| COMPOUND for site specific biorate determination | | | Methanol |
| Stripping rate constant (/hr) Form XI, line 11 | 1 | | 2.1e-5 |
| Enter the batch test Biomass concentration (g/L) on line 2. | 2 | | .258 |
| Headspace correction factor. For a Sealed Batch test use Form X line 10 or 1.00 for an Aerated Batch test. | 3 | | 0.999979 |

| A | B | C | D | E | F | G |
|---|---|---|---|---|---|---|
| concentration S (mg/L) | time (hr) | Rate for interval (mg/L-hr) $(a_i-a_{i+1})/(b_{i+1}-b_i)$ | Log Mean S for interval (mg/L) $(a_i-a_{i+1})/\ln(a_i/a_{i+1})$ | Ratio of rate to S (/hr) (C/D) | Adjusted rate (/hr) (E-line 1) | Reciprocal of adj. rate (hr) (1/F) |
| 1. | | | | | | |
| 2. | | | | | | |
| 3. | | | | | | |
| 4. | | | | | | |
| 5. | | | | | | |
| 6. | | | | | | |
| 7. | | | | | | |
| 8. | | | | | | |
| 9. | | | | | | |

Continue table on attached sheet as needed. Plot values in column G on y axis, values in column D on x axis. Extrapolate the trend of data points to the y intercept (S=0). Attach the plot to the form.

| | | | |
|---|---|---|---|
| Slope of line near intercept (hr-L/mg) | 4 | | .4845 |
| Y intercept from plot (hr) | 5 | | 1.938 |
| First order rate constant K1 (or Qm/Ks, L/g-hr). The number 1.00 divided by the products of the values on line 5, line 2, and line 3. | 6 | | 2.000026 |
| Zero order rate constant (Qm, /hr). The number 1.00 divided by the products of the values on line 4, line 2, and line 3. | 7 | | 8.000104 |
| Concentration applicable to full-scale unit. Enter on line 8. | 8 | | 5 |
| Effective biorate K1 ESTIMATE (L/g MLVSS-hr)* | 9 | | 0.9606 |

*Match the concentration on line 8 to the values in Column D and look up the equivalent rate in Column F. Divide the result with both the biomass concentration (line 2) and the headspace correction factor (line 3). Enter this value on line 9. Do not use this method to estimate K1 for line 9 if the data quality is poor in Column F. The number on line 9 is multiplied by the biomass and the system concentration to estimate the full scale biorate. Alternatively, the Monod model parameters may be used.

**FORM XIII. DATA FORM FOR THE ESTIMATION OF MULTIPLE ZONE BIODEGRADATION FROM UNIT CONCENTRATIONS**

| | | |
|---|---|---|
| NAME OF THE FACILITY for site specific biorate determination | | |
| COMPOUND for site specific biorate determination | | |
| Number of zones in the biological treatment unit | 1 | |
| VOLUME of full-scale system (cubic meters) | 2 | |
| Average DEPTH of the full-scale system (meters) | 3 | |
| FLOW RATE of wastewater treated in the unit (m3/s) | 4 | |
| Recycle flow of wastewater added to the unit, if any (m3/s) | 5 | |
| Concentration in the wastewater treated in the unit (mg/L) | 6 | |
| Concentration in the recycle flow, if any (mg/L) | 7 | |
| Concentration in the effluent (mg/L). | 8 | |

| | | |
|---|---|---|
| TOTAL INLET FLOW (m3/s) line 4 plus the number on line 5 | 9 | |
| TOTAL RESIDENCE TIME (s) line 2 divided by line 9. | 10 | |
| TOTAL AREA OF IMPOUNDMENT (m2) line 2 divided by line 3 | 11 | |

| Zone number | Concentration for zone, Ci (mg/L) | | Area of the zone, A (m2) | Estimate of KL in the zone (m/s) from Form II | | AIR STRIPPING KL A Ci (g/s) |
|---|---|---|---|---|---|---|
| 1 | | | | | | |
| 2 | | | | | | |
| 3 | | | | | | |
| 4 | | | | | | |
| 5 | | | | | | |
| 6 | | | | | | |
| 7 | | | | | | |
| 8 | | | | | | |
| 9 | | | | | | |
| 10 | | | | | | |
| TOTALS sum for each zone. | | 12 | | | 13 | |

| | | |
|---|---|---|
| Removal by air stripping (g/s). Line 13. | 14 | |
| Loading in effluent (g/s). Line 8 times line 9. | 15 | |
| Total loading (g/s). (Line 5 * line 7) + (line 4* line 6). | 16 | |
| Removal by biodegradation (g/s) Line 16 minus (line 14 + line 15). | 17 | |
| Fraction biodegraded: Divide line 17 by line 16.. | 18 | |
| Fraction air emissions: Divide line 14 by line 16. | 19 | |
| Fraction remaining in unit effluent: Divide line 15 by line 16. | 20 | |

[62 FR 2801, Jan. 17, 1997, as amended at 63 FR 67794, Dec. 9, 1998; 66 FR 6935, Jan. 22, 2001]

## APPENDIX D TO PART 63—ALTERNATIVE VALIDATION PROCEDURE FOR EPA WASTE AND WASTEWATER METHODS

### *1. Applicability*

This procedure is to be applied exclusively to Environmental Protection Agency methods developed by the Office of Water and the Office of Resource Conservation and Recovery. Alternative methods developed by any other group or agency shall be validated according to the procedures in Sections 5.1 and 5.3 of Test Method 301, 40 CFR part 63, appendix A. For the purposes of this appendix, ''waste'' means waste and wastewater.

### *2. Procedure*

This procedure shall be applied once for each waste matrix. Waste matrix in the context of this procedure refers to the target compound mixture in the waste as well as the formulation of the medium in which the

target compounds are suspended. The owner or operator shall prepare a sampling plan. Wastewater samples shall be collected using sampling procedures which minimize loss of organic compounds during sample collection and analysis and maintain sample integrity. The sample plan shall include procedures for determining recovery efficiency of the relevant compounds regulated in the applicable subpart. An example of an acceptable sampling plan would be one that incorporates similar sampling and sample handling requirements to those of Method 25D of 40 CFR part 60, appendix A.

2.1. Sampling and Analysis

2.1.1. For each waste matrix, collect twice the number of samples required by the applicable regulation. Designate and label half the sample vials the ''spiked'' sample set, and the other half the ''unspiked'' sample set. Immediately before or immediately after sampling (immediately after in the context of this procedure means after placing the sample into the sample vial, but before the sample is capped, cooled, and shipped to the laboratory for analysis), inject, either individually or as a solution, all the target compounds into each spiked sample.

2.1.2. The mass of each spiked compound shall be 40 to 60 percent of the mass expected to be present in the waste matrix. If the concentration of the target compounds in the waste are not known, the mass of each spiked compound shall be 40 to 60 percent of the limit allowed in the applicable regulation. Analyze both sets of samples (spiked and unspiked) with the chosen method.

*3. Calculations*

For each pair of spiked and unspiked samples, determine the fraction of spiked compound recovered (R) using the following equations.

where:

$m_r$ = mass spiked compound measured (μ g).

$m_s$ = total mass of compound measured in spiked sample (μ g).

$m_u$ = total mass of compound measured in unspiked sample (μ g).

where:

S = theoretical mass of compound spiked into spiked sample (μ g).

3.1. Method Evaluation

In order for the chosen method to be acceptable for a compound, $0.70 \leq R \leq 1.30$ (R in this case is an average value of all the spiked and unspiked sample set R values). If the average R value does not meet this criterion for a target compound, the chosen method is not acceptable for that compound, and therefore another method shall be evaluated for acceptance (by repeating the procedures outlined above with another method).

3.2. Records and Reports

Report the average R value in the test report and correct all reported measurements made with the method with the calculated R value for that compound by using the following equation:

$$\text{Reported Result} = \frac{\text{Measured Mass of Compound}}{\text{R for that compound}}$$

3.3. Optional Correction Step

If the applicable regulation allows for correction of the mass of the compound in the waste by a published $f_m$ value, multiply the reported result calculated above with the appropriate $f_m$ value for that compound.

[61 FR 34200, July 1, 1996, as amended at 74 FR 30230, June 25, 2009]

## APPENDIX E TO PART 63—MONITORING PROCEDURE FOR NONTHOROUGHLY MIXED OPEN BIOLOGICAL TREATMENT SYSTEMS AT KRAFT PULP MILLS UNDER UNSAFE SAMPLING CONDITIONS

*I. Purpose*

This procedure is required to be performed in subpart S of this part, entitled National Emission Standards for Hazardous Air Pollutants from the Pulp and Paper Industry. Subpart S requires this procedure in §63.453(p)(3) to be followed during unsafe sampling conditions when it is not practicable to obtain representative samples of hazardous air pollutants (HAP) concentrations from an open biological treatment unit. It is assumed that inlet and outlet HAP concentrations from the open biological treatment unit may be obtained during the unsafe sampling conditions. The purpose of this procedure is to estimate the concentration of HAP within the open biological treatment unit based on information obtained at inlet and outlet sampling locations in units that are not thoroughly mixed and, therefore, have different concentrations of HAP at different locations within the unit.

*II. Definitions*

Biological treatment unit = wastewater treatment unit designed and operated to promote the growth of bacteria to destroy organic materials in wastewater.

$f_{bio}$ = The fraction of organic compounds in the wastewater biodegraded in a biological treatment unit.

Fe = The fraction of applicable organic compounds emitted from the wastewater to the atmosphere.

K1 = First-order biodegradation rate constant, L/g mixed liquor volatile suspended solids (MLVSS)-hr

KL = Liquid-phase mass transfer coefficient, m/s

Ks = Monod biorate constant at half the maximum rate, g/m$^3$

*III. Test Procedure for Determination of $f_{bio}$ for Nonthoroughly Mixed Open Biological Treatment Units Under Unsafe Sampling Conditions*

This test procedure is used under unsafe sampling conditions that do not permit practicable sampling of open biological treatment units within the unit itself, but rather relies on sampling at the inlet and outlet locations of the unit. This procedure may be used only under unsafe sampling conditions to estimate $f_{bio}$. Once the unsafe conditions have passed, then the formal compliance demonstration procedures of $f_{bio}$ based upon measurements within the open biological treatment unit must be completed.

A. Overview of Estimation Procedure

The steps in the estimation procedure include data collection, the estimation of concentrations within the unit, and the use of Form 1 to estimate $f_{bio}$. The data collection procedure consists of two separate components. The first data collection component demonstrates that the open biological treatment unit can be represented by Monod kinetics and characterizes the effectiveness of the open biological treatment unit as part of the initial performance test, and the second data collection component is used when there are unsafe sampling conditions. These two data collection components are used together in a data calculation procedure based on a Monod kinetic model to estimate the concentrations in each zone of the open biological treatment unit. After the first two components of data collection are completed, the calculation procedures are used to back estimate the zone concentrations, starting with the last zone in the series and ending with the first zone.

B. Data Collection Requirements

This method is based upon modeling the nonthoroughly mixed open biological treatment unit as a series of well-mixed zones with internal recycling between the units and assuming that two Monod biological kinetic parameters can be used to characterize the biological removal rates in each unit. The data collection procedure consists of two separate components. The first data collection component is part of the initial performance test, and the second data collection component is used during unsafe sampling conditions.

*1. Initial Performance Test*

The objective of the first data collection component is to demonstrate that the open biological treatment unit can be represented by Monod kinetics and to characterize the performance of the open biological treatment unit. An appropriate value of the biorate constant, Ks, is determined using actual sampling data from the open biological treatment unit. This is done during the initial performance test when the open biological treatment unit is operating under normal conditions. This specific Ks value obtained during the initial performance test is used in the calculation procedure to characterize the open biological treatment unit during unsafe sampling conditions. The following open biological treatment unit characterization information is obtained from the first component of the data collection procedure:

(1) The value of the biorate constant, Ks;

(2) The number and characteristics of each zone in the open biological treatment unit (depth, area, characterization parameters for surface aeration, submerged aeration rates, biomass concentration, concentrations of organic compounds, dissolved oxygen (DO), dissolved solids, temperature, and other relevant variables); and

(3) The recycle ratio of internal recirculation between the zones. The number of zones and the above characterization of the zones are also used to determine the performance of the unit under the unsafe sampling conditions of concern.

*2. Data Collected Under Unsafe Sampling Conditions*

In the second data collection component obtained under unsafe sampling conditions, the measured inlet and outlet HAP concentrations and the biomass concentration are obtained for the open biological treatment unit. After the site specific data collection is completed on the day a parameter excursion occurs, the inlet and outlet concentrations are used with the prior open biological treatment unit characterization to estimate the concentrations of HAP in each zone. The following information on the open biological treatment unit must be available in the second data collection component:

(1) Basic unit variables such as inlet and recycle wastewater flow rates, type of agitation, and operating conditions;

(2) The value of the inlet and outlet HAP concentrations; and

(3) The biomass concentration in the open biological treatment unit.

C. One Time Determination of a Single Value of Ks (Initial Performance Test)

A single value of Ks is calculated using Form 3 for each data set that is collected during the initial performance test. A single composite value of Ks, deemed to be representative of the biological unit, is subsequently selected so that the $f_{bio}$ values calculated by the procedures in this appendix (using this single value of Ks) for the data sets collected during the initial performance test are within 10 percent of the $f_{bio}$ value determined by using Form 1 with these same data sets. The value of Ks meeting these criteria is obtained by the following steps:

(1) Determine the median of the Ks values calculated for each data set;

(2) Estimate $f_{bio}$ for each data set using the selected Ks value (Form 1 and Form 2);

(3) Calculate $f_{bio}$ for each data set using Form 1; and

(4) Compare the $f_{bio}$ values obtained in steps (2) and (3); if the $f_{bio}$ value calculated using step (2) differs from that calculated using step (3) by more than 10 percent, adjust Ks (decrease Ks if the $f_{bio}$ value is lower than that calculated by Form 1 and vice versa) and repeat this procedure starting at step (2). If a negative value is obtained for the values of Ks, then this negative kinetic constant may not be used with the Monod model. If a negative value of Ks is obtained, this test procedure cannot be used for evaluating the performance of the open biological treatment unit.

D. Confirmation of Monod Kinetics (Initial Performance Test)

(1) Confirmation that the unit can be represented by Monod kinetics is made by identifying the following two items:

(i) The zone methanol concentrations measured during the initial performance test; and

(ii) The zone methanol concentrations estimated by the Multiple Zone Concentrations Calculations Procedure based on inlet and outlet concentrations (Column A of Form 2). For each zone, the concentration in item 1 is compared to the concentration in item 2.

(2) For each zone, the estimated value of item 2 must be:

(i) Within 25 percent of item 1 when item 1 exceeds 8 mg/L; or

(ii) Within 2 mg/L of item 1 when item 1 is 8 mg/L or less.

(3) Successful demonstration that the calculated zone concentrations meet these criteria must be achieved for 80 percent of the performance test data sets.

(4) If negative values are obtained for the values of K1 and Ks, then these negative kinetic constants may not be used with the Monod model, even if the criteria are met. If negative values are obtained, this test procedure cannot be used for evaluating the performance of the open biological treatment unit.

E. Determination of KL for Each Zone (Unsafe Sampling Conditions)

(1) A site-specific liquid-phase mass transfer coefficient (KL) must be obtained for each zone during the unsafe sampling conditions. Do not use a default value for KL. The KL value for each zone must be based on the site-specific parameters of the specific unit. The first step in using this procedure is to calculate KL for each zone in the unit using Form 4. Form 4 outlines the procedure to follow for using mass transfer equations to determine KL. Form 4 identifies the appropriate form to use for providing the detailed calculations to support the estimate of the value of KL. Forms 5 and 6 are used to provide individual compound estimates of KL for quiescent and aerated impoundments, respectively. A computer model may be used to perform the calculations. If the WATER8 model or the most recent update to this model is used, then report the computer model input parameters that you used as an attachment to Form 4. In addition, the Bay Area Sewage Toxics Emission (BASTE) model, version 3.0, or equivalent upgrade and the TOXCHEM (Environment Canada's Wastewater Technology Centre and Environmega, Ltd.) model, version 1.10, or equivalent upgrade may also be used to determine KL for the open biological treatment unit with the following stipulations:

(i) The programs must be altered to output a KL value that is based on the site-specific parameters of the unit modeled; and

(ii) The Henry's law value listed in Form 4 must be substituted for the existing Henry's law values in the models.

(2) The Henry's law value listed in Form 4 may be obtained from the following sources:

(i) Values listed by EPA with temperature adjustment if needed;

(ii) Measured values for the system of concern with temperature adjustment; or

(iii) Literature values of Henry's law values for methanol, adjusted for temperature if needed.

(3) Input values used in the model and corresponding output values shall become part of the documentation of the $f_{bio}$ determination. The owner or operator should be aware that these models may not provide equivalent KL values for some types of units. To obtain an equivalent KL value in this situation, the owner or operator shall either use the appropriate procedure on Form 4 or adjust the KL value from the model to the equivalent KL value as described on Form 4.

(4) Report the input parameters that you used in the computer model on Forms 5, 6, and 7 as an attachment to Form 4. If you have submerged air flow in your unit, you must add the value of KL estimated on Form 7 to the value of KL obtained with Forms 5 and 6 before using the value of KL with Form 2.

F. Estimation of Zone Concentrations (Unsafe Sampling Conditions)

Form 2 is used to estimate the zone concentrations of HAP based on the inlet and outlet data. The value of Ks entered on the form is that single composite value of Ks discussed in section III.C of this appendix. This value of Ks is calculated during the Initial Performance Test (and subsequently updated, if necessary). A unique value of the biorate K1 is entered on line 5 of Form 2, and the inlet concentration is estimated in Column A of Form 2. The inlet concentration is located in the row of Form 2 corresponding to zone 0. If there are three zones in the system, n–3 equals 0 for the inlet concentration row. These estimated zone concentrations are then used in Form 1 to estimate f bio for the treatment unit.

G. Quality Control/Quality Assurance (QA/QC)

A QA/QC plan outlining the procedures used to determine the measured inlet and outlet concentrations during unsafe conditions and how the zone characterization data were obtained during the initial performance test shall be prepared and submitted with the initial performance test report. The plan should include, but may not be limited to:

(1) A description of each of the sampling methods that were used (method, procedures, time, method to avoid losses during sampling and holding, and sampling procedures) including simplified schematic drawings;

(2) A description of how that biomass was sampled from the biotreatment unit, including methods, locations, and times;

(3) A description of what conditions (DO, temperature, etc.) are important, what the target values are in the zones, how the factors were controlled, and how they were monitored. These conditions are primarily used to establish that the conditions of the initial performance test correspond to the conditions of the day in question;

(4) A description of how each analytical measurement was conducted, including preparation of solutions, dilution procedures, sampling procedures, monitoring of conditions, etc;

(5) A description of the analytical instrumentation used, how the instruments were calibrated, and a summary of the accuracy and precision for each instrument;

(6) A description of the test methods used to determine HAP concentrations and other measurements. Section 63.457(c)(3) specifies the test methods that must be used to determine HAP concentrations. During unsafe sampling conditions, you do not have to sample over an extended period of time or obtain more than one sample at each sample point.

(7) A description of how data are captured, recorded, and stored; and

(8) A description of the equations used and their solutions for sampling and analysis, including a reference to any software used for calculations and/or curve-fitting.

*IV. Calculation of Individual $f_{bio}$ (Unsafe Sampling Conditions)*

Use Form 1 with your zone concentration information to estimate the value of f bio under unsafe sampling conditions. Form 1 uses measured concentrations of HAP in the unit inlet and outlet, and Form 1 also uses the estimated concentrations in each zone of the unit obtained from Form 2. This procedure may be used on an open biological treatment unit that has defined zones within the unit. Use Form 1 to determine $f_{bio}$ for each open biological treatment unit as it exists under subpart S of part 63. The first step in using Form 1 is to calculate KL for each zone in the unit using Form 4. Form 7 must also be used if submerged aeration is used. After KL is determined using field data, obtain the concentrations of the HAP in each zone. In this alternative procedure for unsafe sampling conditions, the actual measured concentrations of the HAP in each zone are replaced with the zone concentrations that are estimated with Form 2. After KL and the zone concentrations are determined, Form 1 is used to estimate the overall unit Fe and $f_{bio}$ for methanol.

Form 1

**DATA FORM FOR THE ESTIMATION OF MULTIPLE ZONE BIODEGRADATION FROM UNIT CONCENTRATIONS**

| | | |
|---|---|---|
| NAME OF THE FACILITY for site specific biorate determination | | |
| COMPOUND for site specific biorate determination | | Methanol |
| Number of zones in the biological treatment unit | 1 | |
| VOLUME of full-scale system (cubic meters) | 2 | |
| Average DEPTH of the full-scale system (meters) | 3 | |
| FLOW RATE of wastewater treated in the unit (m3/s) | 4 | |
| Recycle flow of wastewater added to the unit, if any (m3/s) | 5 | |
| Concentration in the wastewater treated in the unit (mg/L) | 6 | |
| Concentration in the recycle flow, if any (mg/L) | 7 | |
| Concentration in the effluent (mg/L). | 8 | |

| | | |
|---|---|---|
| TOTAL INLET FLOW (m3/s) line 4 plus the number on line 5 | 9 | |
| TOTAL RESIDENCE TIME (s) line 2 divided by line 9. | 10 | |
| TOTAL AREA OF IMPOUNDMENT (m2) line 2 divided by line 3 | 11 | |

| Zone number | Concentration for zone, Ci (mg/L) | | Area of the zone, A (m2) | Estimate of KL in the zone (m/s) from Form 4 | | AIR STRIPPING KL A Ci (g/s) |
|---|---|---|---|---|---|---|
| 1 | | | | | | |
| 2 | | | | | | |
| 3 | | | | | | |
| 4 | | | | | | |
| 5 | | | | | | |
| 6 | | | | | | |
| 7 | | | | | | |
| 8 | | | | | | |
| 9 | | | | | | |
| 10 | | | | | | |
| TOTALS sum for each zone. | | 12 | | | 13 | |

| | | |
|---|---|---|
| Removal by air stripping (g/s). Line 13. | 14 | |
| Loading in effluent (g/s). Line 8 times line 9. | 15 | |
| Total loading (g/s). (Line 5 * line 7) + (line 4* line 6). | 16 | |
| Removal by biodegradation (g/s) Line 16 minus (line 14 + line 15). | 17 | |
| Fraction biodegraded: Divide line 17 by line 16. | 18 | |
| Fraction air emissions: Divide line 14 by line 16. | 19 | |
| Fraction remaining in unit effluent: Divide line 15 by line 16. | 20 | |

Form 2

**DATA FORM FOR THE DETERMINATION OF ZONE CONCENTRATIONS FROM KS AND INLET/OUTLET DATA**

| COMPOUND for site specific biorates determination | Methanol | |
|---|---|---|
| Influent Flow ($m^3/s$) | 1 | |
| Inlet Concentration ($g/m^3$) | 2 | |
| Outlet Concentration (g/m3) - Use value from line 3 as Ci value in column A for final Zone (zone n) in table below | 3 | |
| Saturation Coefficient, Ks (g/m3) From Form 3 | 4 | |
| Biorate K1 (1/s) - Estimate | 5 | |
| Number of Zones | 6 | |

Adjust K1 value (line 5) until Column A, Row (n - line 6) is within +/- 5% of line 2.

**Instructions for completion of table:** (1) Transfer value from line 3 into row n, column A. (2) Enter data for all zones into columns B, D, E, G, H, & K. (3) Beginning with row n, perform calculations for columns F, I, J, L, M, N, & O for that zone only. (4) Calculate row n-1, column A using results from previous row (i.e., $J_{i-1}$ ,$M_{i-1}$ , $N_{i-1}$ ) . (5) Repeat steps (3) and (4) until a row of calculations has been completed for each zone. (6) row n - line 6, column A is the calculated inlet concentration.

| | A | B | C | D | E | F | G | H |
|---|---|---|---|---|---|---|---|---|
| Zone Number | Ci $(J_{i-1} + N_{i-1})/O_{i-1}$ $g/m^3$ | Temp C | (1.045)^(B-25) | biomass $g/m^3$ | Volume $m^3$ | line 5 * A*C*D *E/(line 4+ A) g/s | KL m/s | Area $m^2$ |
| n | | | | | | | | |
| n-1 | | | | | | | | |
| n-2 | | | | | | | | |
| n-3 | | | | | | | | |
| n-4 | | | | | | | | |

| | I | J | K | L | M | N | O |
|---|---|---|---|---|---|---|---|
| Zone Number | A*G*H g/s | Reaction F+I g/s | Backmix $BM_i$ | $(1+BM_i+BM_{i+1})$ $*C_i$*line 1 g/s | $BM_{i+1} * C_{i+1}$ *line1 g/s | Flux L-M g/s | $(1+BM_i)$ * line1 g/s |
| n | | | | | | | |
| n-1 | | | | | | | |
| n-2 | | | | | | | |
| n-3 | | | | | | | |
| n-4 | | | | | | | |

*The backmix ratio, Bmi, is the ratio of (the return flow from the zone back to the upstream zone) to (the total inlet flow into the unit). This approach assumes that the flow is sequential through the different zones.*

Form 3

**DATA FORM FOR THE DETERMINATION OF MONOD CONSTANTS FROM ZONE CONCENTRATIONS WITH BACKMIXING**

| | | |
|---|---|---|
| COMPOUND for site specific biorates determination | Methanol | |
| Total Inlet Flow (m3/s) | 1 | |
| Inlet Concentration (g/m3) - Use value from line 2 as Ci-1 value in column D for Zone 1 in table below | 2 | |

| | A | B | C | D | E | F | G | H |
|---|---|---|---|---|---|---|---|---|
| Zone Number | Ci $g/m^3$ | Backmix ($BM_i$) | $(1+BM_i+BM_{i+1})*C_i$ $g/m^3$ | $(1+BM_i)*C_{i-1}$ | $BM_{i+1} * C_{i+1}$ $g/m^3$ | KL m/s | Area $m^2$ | A*F*G g/s |
| 1 | | | | | | | | |
| 2 | | | | | | | | |
| 3 | | | | | | | | |
| 4 | | | | | | | | |
| 5 | | | | | | | | |

| | I | J | K | L | M | N | O |
|---|---|---|---|---|---|---|---|
| Zone Number | Volume m3 | Temp C | (1.045)^(J-25) | biomass $g/m^3$ | I*K*L gm | M/[line 1*(D+E-C)-H] s | 1/A $m^3/g$ |
| 1 | | | | | | | |
| 2 | | | | | | | |
| 3 | | | | | | | |
| 4 | | | | | | | |
| 5 | | | | | | | |

Plot values in column N on y axis, and values in column O on x axis, up to, and including first row where Ci is equal to MDL or to last zone.

| | | |
|---|---|---|
| Y intercept from plot. (g-s/m3) | 3 | |
| K1 (1/s). 1/line 3 | 4 | |
| Slope of line | 5 | |
| Ks (g/m3). Line 5 times line 4 | 6 | |

*The backmix ratio, Bmi, is the ratio of (the return flow from the zone back to the upstream zone) to (the total inlet flow into the unit). This approach assumes that the flow is sequential through the different zones.*

Form 4

**PROCEDURES FORM FOR THE**
**ESTIMATION OF THE KL FROM UNIT SPECIFICATIONS**

| | |
|---|---|
| NAME OF THE FACILITY for site specific biorate determination | |
| NAME OF UNIT for site specific biorate determination | |
| NAME OF COMPOUND | Methanol |
| HENRY'S LAW constant for the compound (mole fraction in gas per mole fraction in water at 25 degrees Celsius) | |

IDENTIFY THE TYPE OF UNIT (check one box below)

| | | |
|---|---|---|
| Quiescent impoundment | 1 | |
| Surface agitated impoundment | 2 | |
| Surface agitated impoundment with submerged air present | 3 | |
| Unit with submerged aeration gas | 4 | |

PROCEDURES BASED UPON THE TYPE OF UNIT

1. Use Form 5 to determine KL for the surface of the quiescent impoundment.
2. Use Form 5 to determine KL for the surface of the quiescent part of the impoundment. Use Form 6 to determine KL for the part of the surface that is agitated, then complete Form 6 with Kq as determined from Form 5.
3. Use Form 5 to determine KL for the surface of the quiescent part of the impoundment. Use Form 6 to determine KL for the part of the surface that is agitated, then complete Form 6 with Kq as determined from Form 5. The total system KL is the sum of the KL from the completed Form 6 and the equivalent KL from Form 7.
4. Evaluate the fraction of the surface that is agitated and the extent of the aeration. Use Form 5 to determine KL for the quiescent part of the surface of the impoundment. Use Form 6 to determine KL for the part of the surface that is agitated, then complete Form 6 with Kq as determined from Form 5. The total system KL is the sum of the KL from the completed Form 6 and the equivalent KL from Form 7. See section 5.6.1 in the document Air Emission Models for Waste and Wastewater.

| | | |
|---|---|---|
| Estimate of surface KL obtained from above procedures (m/s) | 5 | |
| If the submerged aeration is present, the equivalent KL from Form 7 | 6 | |
| The total KL is the sum of line 5 and line 6. | 7 | |

Form 5

## FORM FOR CALCULATING THE MASS TRANSFER COEFFICIENT FOR A QUIESCENT SURFACE IMPOUNDMENT

| | |
|---|---|
| FACILITY NAME for site specific biorate determination | |
| COMPOUND for site specific biorate determination | Methanol |

Input values

Enter the following:

| | |
|---|---|
| F - Impoundment fetch (m) | |
| D - Impoundment depth (m) | |
| U10 - Windspeed 10 m above liquid surface (m/s) | |
| Dw - Diffusivity of compound in water (cm2/s) | |
| Dether - Diffusivity of ether in water (cm2/s) | |
| μG - Viscosity of air, (g/cm-s) | |
| G - Density of air, (g/cm3) | |
| Da - Diffusivity of compound in air, (cm2/s) | |
| A - Area of impoundment, (m2) | |
| H - Henry's law constant, (atm-m3/g mol) | |
| R - Universal gas constant, (atm-m3/g mol. K) | |
| μL - Viscosity of water, (g/cm-s) | |
| L - Density of liquid, (g/cm3) | |
| T - Impoundment temperature, ( C) | |

Calculate the following:

Calculate F/D: [ ]

Calculate the liquid phase mass transfer coefficient, kL, using one of the following procedures, (m/s)

Where F/D < 14 and U10 > 3.25 m/s, use the following procedure from MacKay and Yeun:

Calculate the Schmidt number on the liquid side, ScL, as follows:
ScL = μL/ LDw [ ]

Calculate the friction velocity, U*, as follows, (m/s):
U* = 0.01 x U10(6.1 + 0.63 U10)^0.5 [ ]

Where U* is > 0.3, calculate kL as follows:
kL = (1.0 x 10^-6) + (34.1 x 10^-4)U* x ScL^-0.5 [ ]

Where U* is < 0.3, calculate kL as follows:
kL = (1.0 x 10^-6) + (144 x 10^-4)(U*)^2.2 x ScL^-0.5 [ ]

For all other values of F/D and U10, calculate kL using the following procedure from 2Springer:

Where U10 is < 3.25 m/s, calculate kL as follows:

(identical to Form VII, Appendix C to Part 63) 1 of 2

Form 5

kL = 2.78 x 10^-6(Dw/Dether)^2/3

Where U10 is > 3.25 and 14 < F/D < 51.2, Calculate kL as follows:
kL = [2.605 x 10^-9(F/D) + 1.277 x 10^-7] U10^2 (Dw/Dether)^2/3

Where U10 > 3.25 m/s and F/D > 51.2, calculate kL as follows:
kL = (2.611 x 10^-7)U10^2 (Dw/Dether)^2/3

B. Calculate the gas phase mass transfer coefficient, kG, using the following procedure from MacKay and Matsasugu, (m/s):

Calculate the Schmidt number on the gas side, ScG, as follows: ScG =μG/ GDa

Calculate the effective diameter of the impoundment, de, as follows, (m):
de = (4A/3.14 )^0.5

Calculate kG as follows, (m/s): kG = 4.82 x 10^-3 U10^.78 ScG^-0.67 de^-0.11

C. Calculate the partition coefficient, Keq, as follows: Keq = H/[R(T+273)]

D. Calculate the overall mass transfer coefficient, Kq, as follows, (m/s):
1/Kq = 1/kL + 1/(Keq-kG)

Where the total impoundment surface is quiescent:
KL = Kq

Where a portion of the impoundment surface is turbulent, continue with Form 6.

Form 6

## DATA FORM FOR CALCULATING THE MASS TRANSFER COEFFICIENT FOR AN AERATED SURFACE IMPOUNDMENT

| | |
|---|---|
| Facility Name: | |
| Waste Stream Compound: | Methanol |

Enter the following:

| | |
|---|---|
| J - Oxygen transfer rating of surface aerator, (lb O2/hr-hp) | |
| POWR - Total power to aerators, (hp) | |
| T - Water temperature, ( C) | |
| Ot - Oxygen transfer correction factor | |
| MWL - Molecular weight of liquid | |
| At - Turbulent surface area of impoundment, (ft2) | |
| (If unknown, use values from Table 1) | |
| A - Total surface area of impoundment, (ft2) | |
| rhoL - Density of liquid, (lb/ft3) | |
| Dw - Diffusivity of constituent in water, (cm2/s) | |
| Do - Diffusivity of oxygen in water, (cm2/s) | |
| d - Impeller diameter, (cm) | |
| w - Rotational speed of impeller, (rad/s) | |
| a - Density of air, (gm/cm3) | |
| N - Number of aerators | |
| gc - Gravitation constant, (lbm-ft/s2/lbf) | |
| d* - Impeller diameter, (ft) | |
| Da - Diffusivity of constituent in air, (cm2/s) | |
| MWa - Molecular weight of air | |
| R - Universal gas constant, (atm-m3/g mol. C) | |
| H = Henry's law constant, (atm-m3/g mol) | |

Calculate the following:

A. Calculate the liquid phase mass transfer coefficient, kL, using the following Equation from Thibodeaux:,

kL =[8.22 x 10^-9 J (POWR)(1.024)^(T-20) Ot 10^6 MWL/(At x rhoL/62.37)] (Dw/Do)^0.5, (m/s)

B. Calculate the gas phase mass transfer coefficient, kG, using the following procedure from Reinhardt:,

Calculate the viscosity of air, μa, as follows, (g/cm.s):
μa = 4.568 x 10^-7 T + 1.7209 x 10^-4

Calculate the Reynold's number as follows:
Re = d^2 w a/μa

Calculate power to impeller, PI, as follows, (ft.lbf/s):
PI = 0.85 (POWR) 550/N

(identical to Form VIII, Appendix C to Part 63) 1 of 3

Form 6

Calculate the power number, p, as follows:
p = PI gc/( rhoL d^5 w^3)

Calculate the Schmidt number, ScG, as follows:
ScG = μa/ (a Da)

Calculate the Fronde number, Fr, as follows:
Fr = d*w^2/gc

Calculate kG as follows:
kG = 1.35 x 10^-7 Re ^1.42 p^0.4 ScG^0.5 Fr^-0.21 Da MWa/d, (m/s)

C. Calculate the partition coefficient, Keq, as follows:
Keq = H/[R(T+273)]

D. Calculate the overall turbulent mass transfer coefficient, Kt, as follows, (m/s):
1/Kt = 1/kL + 1/(Keq*kG)

E. Calculate the quiescent mass transfer coefficient, Kq, for the impoundment using Form 5.

F. Calculate the overall mass transfer coefficient, KL, for the impoundment as follows:
KL = (A-At)/A *Kq + At*Kt/A

Form 6 Table 1

PROCEDURES FORM FOR THE ESTIMATION OF THE KL FROM WATER8 a.b

| Motor horsepower | At, Turbulent area, | | Effective depth | V, Agitated volume | aV, Area per volume |
|---|---|---|---|---|---|
| hp | ft2 | m2 | ft | ft3 | ft2/ft3 |
| 5 | 177 | 16.4 | 10 | 1,767 | 0.1002 |
| 7.5 | 201 | 18.7 | 10 | 2,010 | 0.1000 |
| 10 | 227 | 21 | 10.5 | 2,383 | 0.0953 |
| 15 | 284 | 26.4 | 11 | 3,119 | 0.0911 |
| 20 | 346 | 32.1 | 11.5 | 3,983 | 0.0869 |
| 25 | 415 | 38.6 | 12 | 4,986 | 0.0832 |
| 30 | 491 | 45.7 | 12 | 5,890 | 0.0834 |
| 40 | 661 | 61.4 | 13 | 8,587 | 0.0770 |
| 50 | 855 | 79.5 | 14 | 11,970 | 0.0714 |
| 60 | 1075 | 100 | 15 | 16,130 | 0.0666 |
| 75 | 1452 | 135 | 16 | 23,240 | 0.0625 |
| 100 | 2206 | 205 | 18 | 39,710 | 0.0556 |

a Data for a high speed (1,200) rpm) aerator with 60 cm propeller diameter (d).
b This table provides information potentially useful for the value of At.

Form 7

**DATA FORM FOR THE ESTIMATION OF THE EQUIVALENT KL FROM AIR STRIPPING DUE TO SUBMERGED AERATION.**

| | | |
|---|---|---|
| NAME OF THE FACILITY for site specific biorate determination | | |
| COMPOUND for site specific biorate determination | | Methanol |
| VENT RATE of total gas leaving the unit (G, m3/s) | 1 | |
| TEMPERATURE of the liquid in the unit (deg. C) | 2 | |
| ESTIMATE OF Henry's law constant (H, g/m3 in gas / g/m3 in liquid). Corrected for the temperature on line 2. | 3 | |
| AREA OF REACTOR (m2) | 4 | |

**CALCULATION OF THE ESTIMATE OF EQUIVALENT KL**

| | | |
|---|---|---|
| [H G] ESTIMATE (m3/s) Multiply the number on line 1 by the number on line 3. Enter the results here. | 5 | |
| EQUIVALENT KL. Divide the number on line 5 by the number on line 4. Enter the results on line 6. | 6 | |

[65 FR 80765, Dec. 22, 2000]

# FINDING AIDS

A list of CFR titles, subtitles, chapters, subchapters and parts and an alphabetical list of agencies publishing in the CFR are included in the CFR Index and Finding Aids volume to the Code of Federal Regulations which is published separately and revised annually.

Table of CFR Titles and Chapters
Alphabetical List of Agencies Appearing in the CFR
List of CFR Sections Affected

# Table of CFR Titles and Chapters

**(Revised as of July 1, 2021)**

## Title 1—General Provisions


I Administrative Committee of the Federal Register (Parts 1—49)
II Office of the Federal Register (Parts 50—299)
III Administrative Conference of the United States (Parts 300—399)
IV Miscellaneous Agencies (Parts 400—599)
VI National Capital Planning Commission (Parts 600—699)


## Title 2—Grants and Agreements


SUBTITLE A—OFFICE OF MANAGEMENT AND BUDGET GUIDANCE FOR GRANTS AND AGREEMENTS
I Office of Management and Budget Governmentwide Guidance for Grants and Agreements (Parts 2—199)
II Office of Management and Budget Guidance (Parts 200—299)
SUBTITLE B—FEDERAL AGENCY REGULATIONS FOR GRANTS AND AGREEMENTS
III Department of Health and Human Services (Parts 300—399)
IV Department of Agriculture (Parts 400—499)
VI Department of State (Parts 600—699)
VII Agency for International Development (Parts 700—799)
VIII Department of Veterans Affairs (Parts 800—899)
IX Department of Energy (Parts 900—999)
X Department of the Treasury (Parts 1000—1099)
XI Department of Defense (Parts 1100—1199)
XII Department of Transportation (Parts 1200—1299)
XIII Department of Commerce (Parts 1300—1399)
XIV Department of the Interior (Parts 1400—1499)
XV Environmental Protection Agency (Parts 1500—1599)
XVIII National Aeronautics and Space Administration (Parts 1800—1899)
XX United States Nuclear Regulatory Commission (Parts 2000—2099)
XXII Corporation for National and Community Service (Parts 2200—2299)
XXIII Social Security Administration (Parts 2300—2399)
XXIV Department of Housing and Urban Development (Parts 2400—2499)
XXV National Science Foundation (Parts 2500—2599)
XXVI National Archives and Records Administration (Parts 2600—2699)

## Title 2—Grants and Agreements—Continued


| Chap. | |
|---|---|
| XXVII | Small Business Administration (Parts 2700—2799) |
| XXVIII | Department of Justice (Parts 2800—2899) |
| XXIX | Department of Labor (Parts 2900—2999) |
| XXX | Department of Homeland Security (Parts 3000—3099) |
| XXXI | Institute of Museum and Library Services (Parts 3100—3199) |
| XXXII | National Endowment for the Arts (Parts 3200—3299) |
| XXXIII | National Endowment for the Humanities (Parts 3300—3399) |
| XXXIV | Department of Education (Parts 3400—3499) |
| XXXV | Export-Import Bank of the United States (Parts 3500—3599) |
| XXXVI | Office of National Drug Control Policy, Executive Office of the President (Parts 3600—3699) |
| XXXVII | Peace Corps (Parts 3700—3799) |
| LVIII | Election Assistance Commission (Parts 5800—5899) |
| LIX | Gulf Coast Ecosystem Restoration Council (Parts 5900—5999) |


## Title 3—The President


| | |
|---|---|
| I | Executive Office of the President (Parts 100—199) |


## Title 4—Accounts


| | |
|---|---|
| I | Government Accountability Office (Parts 1—199) |


## Title 5—Administrative Personnel


| | |
|---|---|
| I | Office of Personnel Management (Parts 1—1199) |
| II | Merit Systems Protection Board (Parts 1200—1299) |
| III | Office of Management and Budget (Parts 1300—1399) |
| IV | Office of Personnel Management and Office of the Director of National Intelligence (Parts 1400—1499) |
| V | The International Organizations Employees Loyalty Board (Parts 1500—1599) |
| VI | Federal Retirement Thrift Investment Board (Parts 1600—1699) |
| VIII | Office of Special Counsel (Parts 1800—1899) |
| IX | Appalachian Regional Commission (Parts 1900—1999) |
| XI | Armed Forces Retirement Home (Parts 2100—2199) |
| XIV | Federal Labor Relations Authority, General Counsel of the Federal Labor Relations Authority and Federal Service Impasses Panel (Parts 2400—2499) |
| XVI | Office of Government Ethics (Parts 2600—2699) |
| XXI | Department of the Treasury (Parts 3100—3199) |
| XXII | Federal Deposit Insurance Corporation (Parts 3200—3299) |
| XXIII | Department of Energy (Parts 3300—3399) |
| XXIV | Federal Energy Regulatory Commission (Parts 3400—3499) |
| XXV | Department of the Interior (Parts 3500—3599) |
| XXVI | Department of Defense (Parts 3600—3699) |

## Title 5—Administrative Personnel—Continued


| Chap. | |
|---|---|
| XXVIII | Department of Justice (Parts 3800—3899) |
| XXIX | Federal Communications Commission (Parts 3900—3999) |
| XXX | Farm Credit System Insurance Corporation (Parts 4000—4099) |
| XXXI | Farm Credit Administration (Parts 4100—4199) |
| XXXIII | U.S. International Development Finance Corporation (Parts 4300—4399) |
| XXXIV | Securities and Exchange Commission (Parts 4400—4499) |
| XXXV | Office of Personnel Management (Parts 4500—4599) |
| XXXVI | Department of Homeland Security (Parts 4600—4699) |
| XXXVII | Federal Election Commission (Parts 4700—4799) |
| XL | Interstate Commerce Commission (Parts 5000—5099) |
| XLI | Commodity Futures Trading Commission (Parts 5100—5199) |
| XLII | Department of Labor (Parts 5200—5299) |
| XLIII | National Science Foundation (Parts 5300—5399) |
| XLV | Department of Health and Human Services (Parts 5500—5599) |
| XLVI | Postal Rate Commission (Parts 5600—5699) |
| XLVII | Federal Trade Commission (Parts 5700—5799) |
| XLVIII | Nuclear Regulatory Commission (Parts 5800—5899) |
| XLIX | Federal Labor Relations Authority (Parts 5900—5999) |
| L | Department of Transportation (Parts 6000—6099) |
| LII | Export-Import Bank of the United States (Parts 6200—6299) |
| LIII | Department of Education (Parts 6300—6399) |
| LIV | Environmental Protection Agency (Parts 6400—6499) |
| LV | National Endowment for the Arts (Parts 6500—6599) |
| LVI | National Endowment for the Humanities (Parts 6600—6699) |
| LVII | General Services Administration (Parts 6700—6799) |
| LVIII | Board of Governors of the Federal Reserve System (Parts 6800—6899) |
| LIX | National Aeronautics and Space Administration (Parts 6900—6999) |
| LX | United States Postal Service (Parts 7000—7099) |
| LXI | National Labor Relations Board (Parts 7100—7199) |
| LXII | Equal Employment Opportunity Commission (Parts 7200—7299) |
| LXIII | Inter-American Foundation (Parts 7300—7399) |
| LXIV | Merit Systems Protection Board (Parts 7400—7499) |
| LXV | Department of Housing and Urban Development (Parts 7500—7599) |
| LXVI | National Archives and Records Administration (Parts 7600—7699) |
| LXVII | Institute of Museum and Library Services (Parts 7700—7799) |
| LXVIII | Commission on Civil Rights (Parts 7800—7899) |
| LXIX | Tennessee Valley Authority (Parts 7900—7999) |
| LXX | Court Services and Offender Supervision Agency for the District of Columbia (Parts 8000—8099) |
| LXXI | Consumer Product Safety Commission (Parts 8100—8199) |
| LXXIII | Department of Agriculture (Parts 8300—8399) |

## Title 5—Administrative Personnel—Continued


| Chap. | |
|---|---|
| LXXIV | Federal Mine Safety and Health Review Commission (Parts 8400—8499) |
| LXXVI | Federal Retirement Thrift Investment Board (Parts 8600—8699) |
| LXXVII | Office of Management and Budget (Parts 8700—8799) |
| LXXX | Federal Housing Finance Agency (Parts 9000—9099) |
| LXXXIII | Special Inspector General for Afghanistan Reconstruction (Parts 9300—9399) |
| LXXXIV | Bureau of Consumer Financial Protection (Parts 9400—9499) |
| LXXXVI | National Credit Union Administration (Parts 9600—9699) |
| XCVII | Department of Homeland Security Human Resources Management System (Department of Homeland Security—Office of Personnel Management) (Parts 9700—9799) |
| XCVIII | Council of the Inspectors General on Integrity and Efficiency (Parts 9800—9899) |
| XCIX | Military Compensation and Retirement Modernization Commission (Parts 9900—9999) |
| C | National Council on Disability (Parts 10000—10049) |
| CI | National Mediation Board (Parts 10100—10199) |
| CII | U.S. Office of Special Counsel (Parts 10200—10299) |


## Title 6—Domestic Security


| | |
|---|---|
| I | Department of Homeland Security, Office of the Secretary (Parts 1—199) |
| X | Privacy and Civil Liberties Oversight Board (Parts 1000—1099) |


## Title 7—Agriculture


SUBTITLE A—OFFICE OF THE SECRETARY OF AGRICULTURE (PARTS 0—26)

SUBTITLE B—REGULATIONS OF THE DEPARTMENT OF AGRICULTURE

| | |
|---|---|
| I | Agricultural Marketing Service (Standards, Inspections, Marketing Practices), Department of Agriculture (Parts 27—209) |
| II | Food and Nutrition Service, Department of Agriculture (Parts 210—299) |
| III | Animal and Plant Health Inspection Service, Department of Agriculture (Parts 300—399) |
| IV | Federal Crop Insurance Corporation, Department of Agriculture (Parts 400—499) |
| V | Agricultural Research Service, Department of Agriculture (Parts 500—599) |
| VI | Natural Resources Conservation Service, Department of Agriculture (Parts 600—699) |
| VII | Farm Service Agency, Department of Agriculture (Parts 700—799) |
| VIII | Agricultural Marketing Service (Federal Grain Inspection Service, Fair Trade Practices Program), Department of Agriculture (Parts 800—899) |

## Title 7—Agriculture—Continued


| Chap. | |
|---|---|
| IX | Agricultural Marketing Service (Marketing Agreements and Orders; Fruits, Vegetables, Nuts), Department of Agriculture (Parts 900—999) |
| X | Agricultural Marketing Service (Marketing Agreements and Orders; Milk), Department of Agriculture (Parts 1000—1199) |
| XI | Agricultural Marketing Service (Marketing Agreements and Orders; Miscellaneous Commodities), Department of Agriculture (Parts 1200—1299) |
| XIV | Commodity Credit Corporation, Department of Agriculture (Parts 1400—1499) |
| XV | Foreign Agricultural Service, Department of Agriculture (Parts 1500—1599) |
| XVI | (Parts 1600—1699) [Reserved] |
| XVII | Rural Utilities Service, Department of Agriculture (Parts 1700—1799) |
| XVIII | Rural Housing Service, Rural Business-Cooperative Service, Rural Utilities Service, and Farm Service Agency, Department of Agriculture (Parts 1800—2099) |
| XX | (Parts 2200—2299) [Reserved] |
| XXV | Office of Advocacy and Outreach, Department of Agriculture (Parts 2500—2599) |
| XXVI | Office of Inspector General, Department of Agriculture (Parts 2600—2699) |
| XXVII | Office of Information Resources Management, Department of Agriculture (Parts 2700—2799) |
| XXVIII | Office of Operations, Department of Agriculture (Parts 2800—2899) |
| XXIX | Office of Energy Policy and New Uses, Department of Agriculture (Parts 2900—2999) |
| XXX | Office of the Chief Financial Officer, Department of Agriculture (Parts 3000—3099) |
| XXXI | Office of Environmental Quality, Department of Agriculture (Parts 3100—3199) |
| XXXII | Office of Procurement and Property Management, Department of Agriculture (Parts 3200—3299) |
| XXXIII | Office of Transportation, Department of Agriculture (Parts 3300—3399) |
| XXXIV | National Institute of Food and Agriculture (Parts 3400—3499) |
| XXXV | Rural Housing Service, Department of Agriculture (Parts 3500—3599) |
| XXXVI | National Agricultural Statistics Service, Department of Agriculture (Parts 3600—3699) |
| XXXVII | Economic Research Service, Department of Agriculture (Parts 3700—3799) |
| XXXVIII | World Agricultural Outlook Board, Department of Agriculture (Parts 3800—3899) |
| XLI | [Reserved] |
| XLII | Rural Business-Cooperative Service and Rural Utilities Service, Department of Agriculture (Parts 4200—4299) |

## Title 7—Agriculture—Continued

Chap.

L Rural Business-Cooperative Service, and Rural Utilities Service, Department of Agriculture (Parts 5000—5099)

## Title 8—Aliens and Nationality

I Department of Homeland Security (Parts 1—499)

V Executive Office for Immigration Review, Department of Justice (Parts 1000—1399)

## Title 9—Animals and Animal Products

I Animal and Plant Health Inspection Service, Department of Agriculture (Parts 1—199)

II Agricultural Marketing Service (Fair Trade Practices Program), Department of Agriculture (Parts 200—299)

III Food Safety and Inspection Service, Department of Agriculture (Parts 300—599)

## Title 10—Energy

I Nuclear Regulatory Commission (Parts 0—199)

II Department of Energy (Parts 200—699)

III Department of Energy (Parts 700—999)

X Department of Energy (General Provisions) (Parts 1000—1099)

XIII Nuclear Waste Technical Review Board (Parts 1300—1399)

XVII Defense Nuclear Facilities Safety Board (Parts 1700—1799)

XVIII Northeast Interstate Low-Level Radioactive Waste Commission (Parts 1800—1899)

## Title 11—Federal Elections

I Federal Election Commission (Parts 1—9099)

II Election Assistance Commission (Parts 9400—9499)

## Title 12—Banks and Banking

I Comptroller of the Currency, Department of the Treasury (Parts 1—199)

II Federal Reserve System (Parts 200—299)

III Federal Deposit Insurance Corporation (Parts 300—399)

IV Export-Import Bank of the United States (Parts 400—499)

V (Parts 500—599) [Reserved]

VI Farm Credit Administration (Parts 600—699)

VII National Credit Union Administration (Parts 700—799)

VIII Federal Financing Bank (Parts 800—899)

IX (Parts 900—999) [Reserved]

X Bureau of Consumer Financial Protection (Parts 1000—1099)

## Title 12—Banks and Banking—Continued


Chap.

XI Federal Financial Institutions Examination Council (Parts 1100—1199)

XII Federal Housing Finance Agency (Parts 1200—1299)

XIII Financial Stability Oversight Council (Parts 1300—1399)

XIV Farm Credit System Insurance Corporation (Parts 1400—1499)

XV Department of the Treasury (Parts 1500—1599)

XVI Office of Financial Research, Department of the Treasury (Parts 1600—1699)

XVII Office of Federal Housing Enterprise Oversight, Department of Housing and Urban Development (Parts 1700—1799)

XVIII Community Development Financial Institutions Fund, Department of the Treasury (Parts 1800—1899)


## Title 13—Business Credit and Assistance


I Small Business Administration (Parts 1—199)

III Economic Development Administration, Department of Commerce (Parts 300—399)

IV Emergency Steel Guarantee Loan Board (Parts 400—499)

V Emergency Oil and Gas Guaranteed Loan Board (Parts 500—599)


## Title 14—Aeronautics and Space


I Federal Aviation Administration, Department of Transportation (Parts 1—199)

II Office of the Secretary, Department of Transportation (Aviation Proceedings) (Parts 200—399)

III Commercial Space Transportation, Federal Aviation Administration, Department of Transportation (Parts 400—1199)

V National Aeronautics and Space Administration (Parts 1200—1299)

VI Air Transportation System Stabilization (Parts 1300—1399)


## Title 15—Commerce and Foreign Trade


SUBTITLE A—OFFICE OF THE SECRETARY OF COMMERCE (PARTS 0—29)

SUBTITLE B—REGULATIONS RELATING TO COMMERCE AND FOREIGN TRADE

I Bureau of the Census, Department of Commerce (Parts 30—199)

II National Institute of Standards and Technology, Department of Commerce (Parts 200—299)

III International Trade Administration, Department of Commerce (Parts 300—399)

IV Foreign-Trade Zones Board, Department of Commerce (Parts 400—499)

VII Bureau of Industry and Security, Department of Commerce (Parts 700—799)

## Title 15—Commerce and Foreign Trade—Continued


Chap.

VIII Bureau of Economic Analysis, Department of Commerce (Parts 800—899)

IX National Oceanic and Atmospheric Administration, Department of Commerce (Parts 900—999)

XI National Technical Information Service, Department of Commerce (Parts 1100—1199)

XIII East-West Foreign Trade Board (Parts 1300—1399)

XIV Minority Business Development Agency (Parts 1400—1499)

XV Office of the Under-Secretary for Economic Affairs, Department of Commerce (Parts 1500—1599)

SUBTITLE C—REGULATIONS RELATING TO FOREIGN TRADE AGREEMENTS

XX Office of the United States Trade Representative (Parts 2000—2099)

SUBTITLE D—REGULATIONS RELATING TO TELECOMMUNICATIONS AND INFORMATION

XXIII National Telecommunications and Information Administration, Department of Commerce (Parts 2300—2399) [Reserved]


## Title 16—Commercial Practices


I Federal Trade Commission (Parts 0—999)

II Consumer Product Safety Commission (Parts 1000—1799)


## Title 17—Commodity and Securities Exchanges


I Commodity Futures Trading Commission (Parts 1—199)

II Securities and Exchange Commission (Parts 200—399)

IV Department of the Treasury (Parts 400—499)


## Title 18—Conservation of Power and Water Resources


I Federal Energy Regulatory Commission, Department of Energy (Parts 1—399)

III Delaware River Basin Commission (Parts 400—499)

VI Water Resources Council (Parts 700—799)

VIII Susquehanna River Basin Commission (Parts 800—899)

XIII Tennessee Valley Authority (Parts 1300—1399)


## Title 19—Customs Duties


I U.S. Customs and Border Protection, Department of Homeland Security; Department of the Treasury (Parts 0—199)

II United States International Trade Commission (Parts 200—299)

III International Trade Administration, Department of Commerce (Parts 300—399)

IV U.S. Immigration and Customs Enforcement, Department of Homeland Security (Parts 400—599) [Reserved]

## Title 20—Employees' Benefits


Chap.

I Office of Workers' Compensation Programs, Department of Labor (Parts 1—199)

II Railroad Retirement Board (Parts 200—399)

III Social Security Administration (Parts 400—499)

IV Employees' Compensation Appeals Board, Department of Labor (Parts 500—599)

V Employment and Training Administration, Department of Labor (Parts 600—699)

VI Office of Workers' Compensation Programs, Department of Labor (Parts 700—799)

VII Benefits Review Board, Department of Labor (Parts 800—899)

VIII Joint Board for the Enrollment of Actuaries (Parts 900—999)

IX Office of the Assistant Secretary for Veterans' Employment and Training Service, Department of Labor (Parts 1000—1099)


## Title 21—Food and Drugs


I Food and Drug Administration, Department of Health and Human Services (Parts 1—1299)

II Drug Enforcement Administration, Department of Justice (Parts 1300—1399)

III Office of National Drug Control Policy (Parts 1400—1499)


## Title 22—Foreign Relations


I Department of State (Parts 1—199)

II Agency for International Development (Parts 200—299)

III Peace Corps (Parts 300—399)

IV International Joint Commission, United States and Canada (Parts 400—499)

V United States Agency for Global Media (Parts 500—599)

VII U.S. International Development Finance Corporation (Parts 700—799)

IX Foreign Service Grievance Board (Parts 900—999)

X Inter-American Foundation (Parts 1000—1099)

XI International Boundary and Water Commission, United States and Mexico, United States Section (Parts 1100—1199)

XII United States International Development Cooperation Agency (Parts 1200—1299)

XIII Millennium Challenge Corporation (Parts 1300—1399)

XIV Foreign Service Labor Relations Board; Federal Labor Relations Authority; General Counsel of the Federal Labor Relations Authority; and the Foreign Service Impasse Disputes Panel (Parts 1400—1499)

XV African Development Foundation (Parts 1500—1599)

XVI Japan-United States Friendship Commission (Parts 1600—1699)

XVII United States Institute of Peace (Parts 1700—1799)

## Title 23—Highways

Chap.


I Federal Highway Administration, Department of Transportation (Parts 1—999)

II National Highway Traffic Safety Administration and Federal Highway Administration, Department of Transportation (Parts 1200—1299)

III National Highway Traffic Safety Administration, Department of Transportation (Parts 1300—1399)


## Title 24—Housing and Urban Development


SUBTITLE A—OFFICE OF THE SECRETARY, DEPARTMENT OF HOUSING AND URBAN DEVELOPMENT (PARTS 0—99)

SUBTITLE B—REGULATIONS RELATING TO HOUSING AND URBAN DEVELOPMENT

I Office of Assistant Secretary for Equal Opportunity, Department of Housing and Urban Development (Parts 100—199)

II Office of Assistant Secretary for Housing-Federal Housing Commissioner, Department of Housing and Urban Development (Parts 200—299)

III Government National Mortgage Association, Department of Housing and Urban Development (Parts 300—399)

IV Office of Housing and Office of Multifamily Housing Assistance Restructuring, Department of Housing and Urban Development (Parts 400—499)

V Office of Assistant Secretary for Community Planning and Development, Department of Housing and Urban Development (Parts 500—599)

VI Office of Assistant Secretary for Community Planning and Development, Department of Housing and Urban Development (Parts 600—699) [Reserved]

VII Office of the Secretary, Department of Housing and Urban Development (Housing Assistance Programs and Public and Indian Housing Programs) (Parts 700—799)

VIII Office of the Assistant Secretary for Housing—Federal Housing Commissioner, Department of Housing and Urban Development (Section 8 Housing Assistance Programs, Section 202 Direct Loan Program, Section 202 Supportive Housing for the Elderly Program and Section 811 Supportive Housing for Persons With Disabilities Program) (Parts 800—899)

IX Office of Assistant Secretary for Public and Indian Housing, Department of Housing and Urban Development (Parts 900—1699)

X Office of Assistant Secretary for Housing—Federal Housing Commissioner, Department of Housing and Urban Development (Interstate Land Sales Registration Program) (Parts 1700—1799) [Reserved]

XII Office of Inspector General, Department of Housing and Urban Development (Parts 2000—2099)

XV Emergency Mortgage Insurance and Loan Programs, Department of Housing and Urban Development (Parts 2700—2799) [Reserved]

## Title 24—Housing and Urban Development—Continued


Chap.

XX Office of Assistant Secretary for Housing—Federal Housing Commissioner, Department of Housing and Urban Development (Parts 3200—3899)

XXIV Board of Directors of the HOPE for Homeowners Program (Parts 4000—4099) [Reserved]

XXV Neighborhood Reinvestment Corporation (Parts 4100—4199)


## Title 25—Indians


I Bureau of Indian Affairs, Department of the Interior (Parts 1—299)

II Indian Arts and Crafts Board, Department of the Interior (Parts 300—399)

III National Indian Gaming Commission, Department of the Interior (Parts 500—599)

IV Office of Navajo and Hopi Indian Relocation (Parts 700—899)

V Bureau of Indian Affairs, Department of the Interior, and Indian Health Service, Department of Health and Human Services (Part 900—999)

VI Office of the Assistant Secretary, Indian Affairs, Department of the Interior (Parts 1000—1199)

VII Office of the Special Trustee for American Indians, Department of the Interior (Parts 1200—1299)


## Title 26—Internal Revenue


I Internal Revenue Service, Department of the Treasury (Parts 1—End)


## Title 27—Alcohol, Tobacco Products and Firearms


I Alcohol and Tobacco Tax and Trade Bureau, Department of the Treasury (Parts 1—399)

II Bureau of Alcohol, Tobacco, Firearms, and Explosives, Department of Justice (Parts 400—799)


## Title 28—Judicial Administration


I Department of Justice (Parts 0—299)

III Federal Prison Industries, Inc., Department of Justice (Parts 300—399)

V Bureau of Prisons, Department of Justice (Parts 500—599)

VI Offices of Independent Counsel, Department of Justice (Parts 600—699)

VII Office of Independent Counsel (Parts 700—799)

VIII Court Services and Offender Supervision Agency for the District of Columbia (Parts 800—899)

IX National Crime Prevention and Privacy Compact Council (Parts 900—999)

## Title 28—Judicial Administration—Continued


Chap.

XI Department of Justice and Department of State (Parts 1100—1199)


## Title 29—Labor


SUBTITLE A—OFFICE OF THE SECRETARY OF LABOR (PARTS 0—99)

SUBTITLE B—REGULATIONS RELATING TO LABOR

I National Labor Relations Board (Parts 100—199)

II Office of Labor-Management Standards, Department of Labor (Parts 200—299)

III National Railroad Adjustment Board (Parts 300—399)

IV Office of Labor-Management Standards, Department of Labor (Parts 400—499)

V Wage and Hour Division, Department of Labor (Parts 500—899)

IX Construction Industry Collective Bargaining Commission (Parts 900—999)

X National Mediation Board (Parts 1200—1299)

XII Federal Mediation and Conciliation Service (Parts 1400—1499)

XIV Equal Employment Opportunity Commission (Parts 1600—1699)

XVII Occupational Safety and Health Administration, Department of Labor (Parts 1900—1999)

XX Occupational Safety and Health Review Commission (Parts 2200—2499)

XXV Employee Benefits Security Administration, Department of Labor (Parts 2500—2599)

XXVII Federal Mine Safety and Health Review Commission (Parts 2700—2799)

XL Pension Benefit Guaranty Corporation (Parts 4000—4999)


## Title 30—Mineral Resources


I Mine Safety and Health Administration, Department of Labor (Parts 1—199)

II Bureau of Safety and Environmental Enforcement, Department of the Interior (Parts 200—299)

IV Geological Survey, Department of the Interior (Parts 400—499)

V Bureau of Ocean Energy Management, Department of the Interior (Parts 500—599)

VII Office of Surface Mining Reclamation and Enforcement, Department of the Interior (Parts 700—999)

XII Office of Natural Resources Revenue, Department of the Interior (Parts 1200—1299)


## Title 31—Money and Finance: Treasury


SUBTITLE A—OFFICE OF THE SECRETARY OF THE TREASURY (PARTS 0—50)

SUBTITLE B—REGULATIONS RELATING TO MONEY AND FINANCE

## Title 31—Money and Finance: Treasury—Continued


Chap.

I Monetary Offices, Department of the Treasury (Parts 51—199)

II Fiscal Service, Department of the Treasury (Parts 200—399)

IV Secret Service, Department of the Treasury (Parts 400—499)

V Office of Foreign Assets Control, Department of the Treasury (Parts 500—599)

VI Bureau of Engraving and Printing, Department of the Treasury (Parts 600—699)

VII Federal Law Enforcement Training Center, Department of the Treasury (Parts 700—799)

VIII Office of Investment Security, Department of the Treasury (Parts 800—899)

IX Federal Claims Collection Standards (Department of the Treasury—Department of Justice) (Parts 900—999)

X Financial Crimes Enforcement Network, Department of the Treasury (Parts 1000—1099)


## Title 32—National Defense


SUBTITLE A—DEPARTMENT OF DEFENSE

I Office of the Secretary of Defense (Parts 1—399)

V Department of the Army (Parts 400—699)

VI Department of the Navy (Parts 700—799)

VII Department of the Air Force (Parts 800—1099)

SUBTITLE B—OTHER REGULATIONS RELATING TO NATIONAL DEFENSE

XII Department of Defense, Defense Logistics Agency (Parts 1200—1299)

XVI Selective Service System (Parts 1600—1699)

XVII Office of the Director of National Intelligence (Parts 1700—1799)

XVIII National Counterintelligence Center (Parts 1800—1899)

XIX Central Intelligence Agency (Parts 1900—1999)

XX Information Security Oversight Office, National Archives and Records Administration (Parts 2000—2099)

XXI National Security Council (Parts 2100—2199)

XXIV Office of Science and Technology Policy (Parts 2400—2499)

XXVII Office for Micronesian Status Negotiations (Parts 2700—2799)

XXVIII Office of the Vice President of the United States (Parts 2800—2899)


## Title 33—Navigation and Navigable Waters


I Coast Guard, Department of Homeland Security (Parts 1—199)

II Corps of Engineers, Department of the Army, Department of Defense (Parts 200—399)

IV Great Lakes St. Lawrence Seaway Development Corporation, Department of Transportation (Parts 400—499)

## Title 34—Education

Chap.


SUBTITLE A—OFFICE OF THE SECRETARY, DEPARTMENT OF EDUCATION (PARTS 1—99)

SUBTITLE B—REGULATIONS OF THE OFFICES OF THE DEPARTMENT OF EDUCATION

I Office for Civil Rights, Department of Education (Parts 100—199)

II Office of Elementary and Secondary Education, Department of Education (Parts 200—299)

III Office of Special Education and Rehabilitative Services, Department of Education (Parts 300—399)

IV Office of Career, Technical, and Adult Education, Department of Education (Parts 400—499)

V Office of Bilingual Education and Minority Languages Affairs, Department of Education (Parts 500—599) [Reserved]

VI Office of Postsecondary Education, Department of Education (Parts 600—699)

VII Office of Educational Research and Improvement, Department of Education (Parts 700—799) [Reserved]

SUBTITLE C—REGULATIONS RELATING TO EDUCATION

XI (Parts 1100—1199) [Reserved]

XII National Council on Disability (Parts 1200—1299)


## Title 35 [Reserved]

## Title 36—Parks, Forests, and Public Property


I National Park Service, Department of the Interior (Parts 1—199)

II Forest Service, Department of Agriculture (Parts 200—299)

III Corps of Engineers, Department of the Army (Parts 300—399)

IV American Battle Monuments Commission (Parts 400—499)

V Smithsonian Institution (Parts 500—599)

VI [Reserved]

VII Library of Congress (Parts 700—799)

VIII Advisory Council on Historic Preservation (Parts 800—899)

IX Pennsylvania Avenue Development Corporation (Parts 900—999)

X Presidio Trust (Parts 1000—1099)

XI Architectural and Transportation Barriers Compliance Board (Parts 1100—1199)

XII National Archives and Records Administration (Parts 1200—1299)

XV Oklahoma City National Memorial Trust (Parts 1500—1599)

XVI Morris K. Udall Scholarship and Excellence in National Environmental Policy Foundation (Parts 1600—1699)


## Title 37—Patents, Trademarks, and Copyrights


I United States Patent and Trademark Office, Department of Commerce (Parts 1—199)

II U.S. Copyright Office, Library of Congress (Parts 200—299)

## Title 37—Patents, Trademarks, and Copyrights—Continued


Chap.

III Copyright Royalty Board, Library of Congress (Parts 300—399)

IV National Institute of Standards and Technology, Department of Commerce (Parts 400—599)


## Title 38—Pensions, Bonuses, and Veterans' Relief


I Department of Veterans Affairs (Parts 0—199)

II Armed Forces Retirement Home (Parts 200—299)


## Title 39—Postal Service


I United States Postal Service (Parts 1—999)

III Postal Regulatory Commission (Parts 3000—3099)


## Title 40—Protection of Environment


I Environmental Protection Agency (Parts 1—1099)

IV Environmental Protection Agency and Department of Justice (Parts 1400—1499)

V Council on Environmental Quality (Parts 1500—1599)

VI Chemical Safety and Hazard Investigation Board (Parts 1600—1699)

VII Environmental Protection Agency and Department of Defense; Uniform National Discharge Standards for Vessels of the Armed Forces (Parts 1700—1799)

VIII Gulf Coast Ecosystem Restoration Council (Parts 1800—1899)

IX Federal Permitting Improvement Steering Council (Part 1900)


## Title 41—Public Contracts and Property Management


SUBTITLE A—FEDERAL PROCUREMENT REGULATIONS SYSTEM [NOTE]

SUBTITLE B—OTHER PROVISIONS RELATING TO PUBLIC CONTRACTS

50 Public Contracts, Department of Labor (Parts 50–1—50–999)

51 Committee for Purchase From People Who Are Blind or Severely Disabled (Parts 51–1—51–99)

60 Office of Federal Contract Compliance Programs, Equal Employment Opportunity, Department of Labor (Parts 60–1—60–999)

61 Office of the Assistant Secretary for Veterans' Employment and Training Service, Department of Labor (Parts 61–1—61–999)

62—100 [Reserved]

SUBTITLE C—FEDERAL PROPERTY MANAGEMENT REGULATIONS SYSTEM

101 Federal Property Management Regulations (Parts 101–1—101–99)

102 Federal Management Regulation (Parts 102–1—102–299)

103—104 [Reserved]

105 General Services Administration (Parts 105–1—105–999)

## Title 41—Public Contracts and Property Management—Continued


Chap.

109 Department of Energy Property Management Regulations (Parts 109–1—109–99)

114 Department of the Interior (Parts 114–1—114–99)

115 Environmental Protection Agency (Parts 115–1—115–99)

128 Department of Justice (Parts 128–1—128–99)

129—200 [Reserved]

SUBTITLE D—OTHER PROVISIONS RELATING TO PROPERTY MANAGEMENT [RESERVED]

SUBTITLE E—FEDERAL INFORMATION RESOURCES MANAGEMENT REGULATIONS SYSTEM [RESERVED]

SUBTITLE F—FEDERAL TRAVEL REGULATION SYSTEM

300 General (Parts 300–1—300–99)

301 Temporary Duty (TDY) Travel Allowances (Parts 301–1—301–99)

302 Relocation Allowances (Parts 302–1—302–99)

303 Payment of Expenses Connected with the Death of Certain Employees (Part 303–1—303–99)

304 Payment of Travel Expenses from a Non-Federal Source (Parts 304–1—304–99)


## Title 42—Public Health


I Public Health Service, Department of Health and Human Services (Parts 1—199)

II—III [Reserved]

IV Centers for Medicare & Medicaid Services, Department of Health and Human Services (Parts 400—699)

V Office of Inspector General-Health Care, Department of Health and Human Services (Parts 1000—1099)


## Title 43—Public Lands: Interior


SUBTITLE A—OFFICE OF THE SECRETARY OF THE INTERIOR (PARTS 1—199)

SUBTITLE B—REGULATIONS RELATING TO PUBLIC LANDS

I Bureau of Reclamation, Department of the Interior (Parts 400—999)

II Bureau of Land Management, Department of the Interior (Parts 1000—9999)

III Utah Reclamation Mitigation and Conservation Commission (Parts 10000—10099)


## Title 44—Emergency Management and Assistance


I Federal Emergency Management Agency, Department of Homeland Security (Parts 0—399)

IV Department of Commerce and Department of Transportation (Parts 400—499)

## Title 45—Public Welfare

Chap.


SUBTITLE A—DEPARTMENT OF HEALTH AND HUMAN SERVICES (PARTS 1—199)

SUBTITLE B—REGULATIONS RELATING TO PUBLIC WELFARE

II Office of Family Assistance (Assistance Programs), Administration for Children and Families, Department of Health and Human Services (Parts 200—299)

III Office of Child Support Enforcement (Child Support Enforcement Program), Administration for Children and Families, Department of Health and Human Services (Parts 300—399)

IV Office of Refugee Resettlement, Administration for Children and Families, Department of Health and Human Services (Parts 400—499)

V Foreign Claims Settlement Commission of the United States, Department of Justice (Parts 500—599)

VI National Science Foundation (Parts 600—699)

VII Commission on Civil Rights (Parts 700—799)

VIII Office of Personnel Management (Parts 800—899)

IX Denali Commission (Parts 900—999)

X Office of Community Services, Administration for Children and Families, Department of Health and Human Services (Parts 1000—1099)

XI National Foundation on the Arts and the Humanities (Parts 1100—1199)

XII Corporation for National and Community Service (Parts 1200—1299)

XIII Administration for Children and Families, Department of Health and Human Services (Parts 1300—1399)

XVI Legal Services Corporation (Parts 1600—1699)

XVII National Commission on Libraries and Information Science (Parts 1700—1799)

XVIII Harry S. Truman Scholarship Foundation (Parts 1800—1899)

XXI Commission of Fine Arts (Parts 2100—2199)

XXIII Arctic Research Commission (Parts 2300—2399)

XXIV James Madison Memorial Fellowship Foundation (Parts 2400—2499)

XXV Corporation for National and Community Service (Parts 2500—2599)


## Title 46—Shipping


I Coast Guard, Department of Homeland Security (Parts 1—199)

II Maritime Administration, Department of Transportation (Parts 200—399)

III Coast Guard (Great Lakes Pilotage), Department of Homeland Security (Parts 400—499)

IV Federal Maritime Commission (Parts 500—599)

## Title 47—Telecommunication


Chap.

I Federal Communications Commission (Parts 0—199)

II Office of Science and Technology Policy and National Security Council (Parts 200—299)

III National Telecommunications and Information Administration, Department of Commerce (Parts 300—399)

IV National Telecommunications and Information Administration, Department of Commerce, and National Highway Traffic Safety Administration, Department of Transportation (Parts 400—499)

V The First Responder Network Authority (Parts 500—599)


## Title 48—Federal Acquisition Regulations System


1 Federal Acquisition Regulation (Parts 1—99)

2 Defense Acquisition Regulations System, Department of Defense (Parts 200—299)

3 Department of Health and Human Services (Parts 300—399)

4 Department of Agriculture (Parts 400—499)

5 General Services Administration (Parts 500—599)

6 Department of State (Parts 600—699)

7 Agency for International Development (Parts 700—799)

8 Department of Veterans Affairs (Parts 800—899)

9 Department of Energy (Parts 900—999)

10 Department of the Treasury (Parts 1000—1099)

12 Department of Transportation (Parts 1200—1299)

13 Department of Commerce (Parts 1300—1399)

14 Department of the Interior (Parts 1400—1499)

15 Environmental Protection Agency (Parts 1500—1599)

16 Office of Personnel Management Federal Employees Health Benefits Acquisition Regulation (Parts 1600—1699)

17 Office of Personnel Management (Parts 1700—1799)

18 National Aeronautics and Space Administration (Parts 1800—1899)

19 Broadcasting Board of Governors (Parts 1900—1999)

20 Nuclear Regulatory Commission (Parts 2000—2099)

21 Office of Personnel Management, Federal Employees Group Life Insurance Federal Acquisition Regulation (Parts 2100—2199)

23 Social Security Administration (Parts 2300—2399)

24 Department of Housing and Urban Development (Parts 2400—2499)

25 National Science Foundation (Parts 2500—2599)

28 Department of Justice (Parts 2800—2899)

29 Department of Labor (Parts 2900—2999)

30 Department of Homeland Security, Homeland Security Acquisition Regulation (HSAR) (Parts 3000—3099)

34 Department of Education Acquisition Regulation (Parts 3400—3499)

## Title 48—Federal Acquisition Regulations System—Continued

Chap.


51 Department of the Army Acquisition Regulations (Parts 5100—5199) [Reserved]

52 Department of the Navy Acquisition Regulations (Parts 5200—5299)

53 Department of the Air Force Federal Acquisition Regulation Supplement (Parts 5300—5399) [Reserved]

54 Defense Logistics Agency, Department of Defense (Parts 5400—5499)

57 African Development Foundation (Parts 5700—5799)

61 Civilian Board of Contract Appeals, General Services Administration (Parts 6100—6199)

99 Cost Accounting Standards Board, Office of Federal Procurement Policy, Office of Management and Budget (Parts 9900—9999)


## Title 49—Transportation


SUBTITLE A—OFFICE OF THE SECRETARY OF TRANSPORTATION (PARTS 1—99)

SUBTITLE B—OTHER REGULATIONS RELATING TO TRANSPORTATION

I Pipeline and Hazardous Materials Safety Administration, Department of Transportation (Parts 100—199)

II Federal Railroad Administration, Department of Transportation (Parts 200—299)

III Federal Motor Carrier Safety Administration, Department of Transportation (Parts 300—399)

IV Coast Guard, Department of Homeland Security (Parts 400—499)

V National Highway Traffic Safety Administration, Department of Transportation (Parts 500—599)

VI Federal Transit Administration, Department of Transportation (Parts 600—699)

VII National Railroad Passenger Corporation (AMTRAK) (Parts 700—799)

VIII National Transportation Safety Board (Parts 800—999)

X Surface Transportation Board (Parts 1000—1399)

XI Research and Innovative Technology Administration, Department of Transportation (Parts 1400—1499) [Reserved]

XII Transportation Security Administration, Department of Homeland Security (Parts 1500—1699)


## Title 50—Wildlife and Fisheries


I United States Fish and Wildlife Service, Department of the Interior (Parts 1—199)

II National Marine Fisheries Service, National Oceanic and Atmospheric Administration, Department of Commerce (Parts 200—299)

III International Fishing and Related Activities (Parts 300—399)

## Title 50—Wildlife and Fisheries—Continued


Chap.

IV Joint Regulations (United States Fish and Wildlife Service, Department of the Interior and National Marine Fisheries Service, National Oceanic and Atmospheric Administration, Department of Commerce); Endangered Species Committee Regulations (Parts 400—499)

V Marine Mammal Commission (Parts 500—599)

VI Fishery Conservation and Management, National Oceanic and Atmospheric Administration, Department of Commerce (Parts 600—699)

# Alphabetical List of Agencies Appearing in the CFR

**(Revised as of July 1, 2021)**

| Agency | CFR Title, Subtitle or Chapter |
|---|---|
| Administrative Conference of the United States | 1, III |
| Advisory Council on Historic Preservation | 36, VIII |
| Advocacy and Outreach, Office of | 7, XXV |
| Afghanistan Reconstruction, Special Inspector General for | 5, LXXXIII |
| African Development Foundation | 22, XV |
| Federal Acquisition Regulation | 48, 57 |
| Agency for International Development | 2, VII; 22, II |
| Federal Acquisition Regulation | 48, 7 |
| Agricultural Marketing Service | 7, I, VIII, IX, X, XI; 9, II |
| Agricultural Research Service | 7, V |
| Agriculture, Department of | 2, IV; 5, LXXIII |
| Advocacy and Outreach, Office of | 7, XXV |
| Agricultural Marketing Service | 7, I, VIII, IX, X, XI; 9, II |
| Agricultural Research Service | 7, V |
| Animal and Plant Health Inspection Service | 7, III; 9, I |
| Chief Financial Officer, Office of | 7, XXX |
| Commodity Credit Corporation | 7, XIV |
| Economic Research Service | 7, XXXVII |
| Energy Policy and New Uses, Office of | 2, IX; 7, XXIX |
| Environmental Quality, Office of | 7, XXXI |
| Farm Service Agency | 7, VII, XVIII |
| Federal Acquisition Regulation | 48, 4 |
| Federal Crop Insurance Corporation | 7, IV |
| Food and Nutrition Service | 7, II |
| Food Safety and Inspection Service | 9, III |
| Foreign Agricultural Service | 7, XV |
| Forest Service | 36, II |
| Information Resources Management, Office of | 7, XXVII |
| Inspector General, Office of | 7, XXVI |
| National Agricultural Library | 7, XLI |
| National Agricultural Statistics Service | 7, XXXVI |
| National Institute of Food and Agriculture | 7, XXXIV |
| Natural Resources Conservation Service | 7, VI |
| Operations, Office of | 7, XXVIII |
| Procurement and Property Management, Office of | 7, XXXII |
| Rural Business-Cooperative Service | 7, XVIII, XLII |
| Rural Development Administration | 7, XLII |
| Rural Housing Service | 7, XVIII, XXXV |
| Rural Utilities Service | 7, XVII, XVIII, XLII |
| Secretary of Agriculture, Office of | 7, Subtitle A |
| Transportation, Office of | 7, XXXIII |
| World Agricultural Outlook Board | 7, XXXVIII |
| Air Force, Department of | 32, VII |
| Federal Acquisition Regulation Supplement | 48, 53 |
| Air Transportation Stabilization Board | 14, VI |
| Alcohol and Tobacco Tax and Trade Bureau | 27, I |
| Alcohol, Tobacco, Firearms, and Explosives, Bureau of | 27, II |
| AMTRAK | 49, VII |
| American Battle Monuments Commission | 36, IV |
| American Indians, Office of the Special Trustee | 25, VII |
| Animal and Plant Health Inspection Service | 7, III; 9, I |
| Appalachian Regional Commission | 5, IX |
| Architectural and Transportation Barriers Compliance Board | 36, XI |

| Agency | CFR Title, Subtitle or Chapter |
|---|---|
| Arctic Research Commission | 45, XXIII |
| Armed Forces Retirement Home | 5, XI; 38, II |
| Army, Department of | 32, V |
| Engineers, Corps of | 33, II; 36, III |
| Federal Acquisition Regulation | 48, 51 |
| Benefits Review Board | 20, VII |
| Bilingual Education and Minority Languages Affairs, Office of | 34, V |
| Blind or Severely Disabled, Committee for Purchase from People Who Are | 41, 51 |
| Federal Acquisition Regulation | 48, 19 |
| Career, Technical, and Adult Education, Office of | 34, IV |
| Census Bureau | 15, I |
| Centers for Medicare & Medicaid Services | 42, IV |
| Central Intelligence Agency | 32, XIX |
| Chemical Safety and Hazard Investigation Board | 40, VI |
| Chief Financial Officer, Office of | 7, XXX |
| Child Support Enforcement, Office of | 45, III |
| Children and Families, Administration for | 45, II, III, IV, X, XIII |
| Civil Rights, Commission on | 5, LXVIII; 45, VII |
| Civil Rights, Office for | 34, I |
| Coast Guard | 33, I; 46, I; 49, IV |
| Coast Guard (Great Lakes Pilotage) | 46, III |
| Commerce, Department of | 2, XIII; 44, IV; 50, VI |
| Census Bureau | 15, I |
| Economic Affairs, Office of the Under-Secretary for | 15, XV |
| Economic Analysis, Bureau of | 15, VIII |
| Economic Development Administration | 13, III |
| Emergency Management and Assistance | 44, IV |
| Federal Acquisition Regulation | 48, 13 |
| Foreign-Trade Zones Board | 15, IV |
| Industry and Security, Bureau of | 15, VII |
| International Trade Administration | 15, III; 19, III |
| National Institute of Standards and Technology | 15, II; 37, IV |
| National Marine Fisheries Service | 50, II, IV |
| National Oceanic and Atmospheric Administration | 15, IX; 50, II, III, IV, VI |
| National Technical Information Service | 15, XI |
| National Telecommunications and Information Administration | 15, XXIII; 47, III, IV |
| National Weather Service | 15, IX |
| Patent and Trademark Office, United States | 37, I |
| Secretary of Commerce, Office of | 15, Subtitle A |
| Commercial Space Transportation | 14, III |
| Commodity Credit Corporation | 7, XIV |
| Commodity Futures Trading Commission | 5, XLI; 17, I |
| Community Planning and Development, Office of Assistant Secretary for | 24, V, VI |
| Community Services, Office of | 45, X |
| Comptroller of the Currency | 12, I |
| Construction Industry Collective Bargaining Commission | 29, IX |
| Consumer Financial Protection Bureau | 5, LXXXIV; 12, X |
| Consumer Product Safety Commission | 5, LXXI; 16, II |
| Copyright Royalty Board | 37, III |
| Corporation for National and Community Service | 2, XXII; 45, XII, XXV |
| Cost Accounting Standards Board | 48, 99 |
| Council on Environmental Quality | 40, V |
| Council of the Inspectors General on Integrity and Efficiency | 5, XCVIII |
| Court Services and Offender Supervision Agency for the District of Columbia | 5, LXX; 28, VIII |
| Customs and Border Protection | 19, I |
| Defense, Department of | 2, XI; 5, XXVI; 32, Subtitle A; 40, VII |
| Advanced Research Projects Agency | 32, I |
| Air Force Department | 32, VII |
| Army Department | 32, V; 33, II; 36, III; 48, 51 |
| Defense Acquisition Regulations System | 48, 2 |
| Defense Intelligence Agency | 32, I |

| Agency | CFR Title, Subtitle or Chapter |
|---|---|
| Defense Logistics Agency | 32, I, XII; 48, 54 |
| Engineers, Corps of | 33, II; 36, III |
| National Imagery and Mapping Agency | 32, I |
| Navy, Department of | 32, VI; 48, 52 |
| Secretary of Defense, Office of | 2, XI; 32, I |
| Defense Contract Audit Agency | 32, I |
| Defense Intelligence Agency | 32, I |
| Defense Logistics Agency | 32, XII; 48, 54 |
| Defense Nuclear Facilities Safety Board | 10, XVII |
| Delaware River Basin Commission | 18, III |
| Denali Commission | 45, IX |
| Disability, National Council on | 5, C; 34, XII |
| District of Columbia, Court Services and Offender Supervision Agency for the | 5, LXX; 28, VIII |
| Drug Enforcement Administration | 21, II |
| East-West Foreign Trade Board | 15, XIII |
| Economic Affairs, Office of the Under-Secretary for | 15, XV |
| Economic Analysis, Bureau of | 15, VIII |
| Economic Development Administration | 13, III |
| Economic Research Service | 7, XXXVII |
| Education, Department of | 2, XXXIV; 5, LIII |
| Bilingual Education and Minority Languages Affairs, Office of | 34, V |
| Career, Technical, and Adult Education, Office of | 34, IV |
| Civil Rights, Office for | 34, I |
| Educational Research and Improvement, Office of | 34, VII |
| Elementary and Secondary Education, Office of | 34, II |
| Federal Acquisition Regulation | 48, 34 |
| Postsecondary Education, Office of | 34, VI |
| Secretary of Education, Office of | 34, Subtitle A |
| Special Education and Rehabilitative Services, Office of | 34, III |
| Educational Research and Improvement, Office of | 34, VII |
| Election Assistance Commission | 2, LVIII; 11, II |
| Elementary and Secondary Education, Office of | 34, II |
| Emergency Oil and Gas Guaranteed Loan Board | 13, V |
| Emergency Steel Guarantee Loan Board | 13, IV |
| Employee Benefits Security Administration | 29, XXV |
| Employees' Compensation Appeals Board | 20, IV |
| Employees Loyalty Board | 5, V |
| Employment and Training Administration | 20, V |
| Employment Policy, National Commission for | 1, IV |
| Employment Standards Administration | 20, VI |
| Endangered Species Committee | 50, IV |
| Energy, Department of | 2, IX; 5, XXIII; 10, II, III, X |
| Federal Acquisition Regulation | 48, 9 |
| Federal Energy Regulatory Commission | 5, XXIV; 18, I |
| Property Management Regulations | 41, 109 |
| Energy, Office of | 7, XXIX |
| Engineers, Corps of | 33, II; 36, III |
| Engraving and Printing, Bureau of | 31, VI |
| Environmental Protection Agency | 2, XV; 5, LIV; 40, I, IV, VII |
| Federal Acquisition Regulation | 48, 15 |
| Property Management Regulations | 41, 115 |
| Environmental Quality, Office of | 7, XXXI |
| Equal Employment Opportunity Commission | 5, LXII; 29, XIV |
| Equal Opportunity, Office of Assistant Secretary for | 24, I |
| Executive Office of the President | 3, I |
| Environmental Quality, Council on | 40, V |
| Management and Budget, Office of | 2, Subtitle A; 5, III, LXXVII; 14, VI; 48, 99 |
| National Drug Control Policy, Office of | 2, XXXVI; 21, III |
| National Security Council | 32, XXI; 47, II |
| Presidential Documents | 3 |
| Science and Technology Policy, Office of | 32, XXIV; 47, II |
| Trade Representative, Office of the United States | 15, XX |

| Agency | CFR Title, Subtitle or Chapter |
|---|---|
| Export-Import Bank of the United States | 2, XXXV; 5, LII; 12, IV |
| Family Assistance, Office of | 45, II |
| Farm Credit Administration | 5, XXXI; 12, VI |
| Farm Credit System Insurance Corporation | 5, XXX; 12, XIV |
| Farm Service Agency | 7, VII, XVIII |
| Federal Acquisition Regulation | 48, 1 |
| Federal Aviation Administration | 14, I |
| Commercial Space Transportation | 14, III |
| Federal Claims Collection Standards | 31, IX |
| Federal Communications Commission | 5, XXIX; 47, I |
| Federal Contract Compliance Programs, Office of | 41, 60 |
| Federal Crop Insurance Corporation | 7, IV |
| Federal Deposit Insurance Corporation | 5, XXII; 12, III |
| Federal Election Commission | 5, XXXVII; 11, I |
| Federal Emergency Management Agency | 44, I |
| Federal Employees Group Life Insurance Federal Acquisition Regulation | 48, 21 |
| Federal Employees Health Benefits Acquisition Regulation | 48, 16 |
| Federal Energy Regulatory Commission | 5, XXIV; 18, I |
| Federal Financial Institutions Examination Council | 12, XI |
| Federal Financing Bank | 12, VIII |
| Federal Highway Administration | 23, I, II |
| Federal Home Loan Mortgage Corporation | 1, IV |
| Federal Housing Enterprise Oversight Office | 12, XVII |
| Federal Housing Finance Agency | 5, LXXX; 12, XII |
| Federal Labor Relations Authority | 5, XIV, XLIX; 22, XIV |
| Federal Law Enforcement Training Center | 31, VII |
| Federal Management Regulation | 41, 102 |
| Federal Maritime Commission | 46, IV |
| Federal Mediation and Conciliation Service | 29, XII |
| Federal Mine Safety and Health Review Commission | 5, LXXIV; 29, XXVII |
| Federal Motor Carrier Safety Administration | 49, III |
| Federal Permitting Improvement Steering Council | 40, IX |
| Federal Prison Industries, Inc. | 28, III |
| Federal Procurement Policy Office | 48, 99 |
| Federal Property Management Regulations | 41, 101 |
| Federal Railroad Administration | 49, II |
| Federal Register, Administrative Committee of | 1, I |
| Federal Register, Office of | 1, II |
| Federal Reserve System | 12, II |
| Board of Governors | 5, LVIII |
| Federal Retirement Thrift Investment Board | 5, VI, LXXVI |
| Federal Service Impasses Panel | 5, XIV |
| Federal Trade Commission | 5, XLVII; 16, I |
| Federal Transit Administration | 49, VI |
| Federal Travel Regulation System | 41, Subtitle F |
| Financial Crimes Enforcement Network | 31, X |
| Financial Research Office | 12, XVI |
| Financial Stability Oversight Council | 12, XIII |
| Fine Arts, Commission of | 45, XXI |
| Fiscal Service | 31, II |
| Fish and Wildlife Service, United States | 50, I, IV |
| Food and Drug Administration | 21, I |
| Food and Nutrition Service | 7, II |
| Food Safety and Inspection Service | 9, III |
| Foreign Agricultural Service | 7, XV |
| Foreign Assets Control, Office of | 31, V |
| Foreign Claims Settlement Commission of the United States | 45, V |
| Foreign Service Grievance Board | 22, IX |
| Foreign Service Impasse Disputes Panel | 22, XIV |
| Foreign Service Labor Relations Board | 22, XIV |
| Foreign-Trade Zones Board | 15, IV |
| Forest Service | 36, II |
| General Services Administration | 5, LVII; 41, 105 |
| Contract Appeals, Board of | 48, 61 |
| Federal Acquisition Regulation | 48, 5 |
| Federal Management Regulation | 41, 102 |

| Agency | CFR Title, Subtitle or Chapter |
|---|---|
| Federal Property Management Regulations | 41, 101 |
| Federal Travel Regulation System | 41, Subtitle F |
| General | 41, 300 |
| Payment From a Non-Federal Source for Travel Expenses | 41, 304 |
| Payment of Expenses Connected With the Death of Certain Employees | 41, 303 |
| Relocation Allowances | 41, 302 |
| Temporary Duty (TDY) Travel Allowances | 41, 301 |
| Geological Survey | 30, IV |
| Government Accountability Office | 4, I |
| Government Ethics, Office of | 5, XVI |
| Government National Mortgage Association | 24, III |
| Grain Inspection, Packers and Stockyards Administration | 7, VIII; 9, II |
| Great Lakes St. Lawrence Seaway Development Corporation | 33, IV |
| Gulf Coast Ecosystem Restoration Council | 2, LIX; 40, VIII |
| Harry S. Truman Scholarship Foundation | 45, XVIII |
| Health and Human Services, Department of | 2, III; 5, XLV; 45, Subtitle A |
| Centers for Medicare & Medicaid Services | 42, IV |
| Child Support Enforcement, Office of | 45, III |
| Children and Families, Administration for | 45, II, III, IV, X, XIII |
| Community Services, Office of | 45, X |
| Family Assistance, Office of | 45, II |
| Federal Acquisition Regulation | 48, 3 |
| Food and Drug Administration | 21, I |
| Indian Health Service | 25, V |
| Inspector General (Health Care), Office of | 42, V |
| Public Health Service | 42, I |
| Refugee Resettlement, Office of | 45, IV |
| Homeland Security, Department of | 2, XXX; 5, XXXVI; 6, I; 8, I |
| Coast Guard | 33, I; 46, I; 49, IV |
| Coast Guard (Great Lakes Pilotage) | 46, III |
| Customs and Border Protection | 19, I |
| Federal Emergency Management Agency | 44, I |
| Human Resources Management and Labor Relations Systems | 5, XCVII |
| Immigration and Customs Enforcement Bureau | 19, IV |
| Transportation Security Administration | 49, XII |
| HOPE for Homeowners Program, Board of Directors of | 24, XXIV |
| Housing, Office of, and Multifamily Housing Assistance Restructuring, Office of | 24, IV |
| Housing and Urban Development, Department of | 2, XXIV; 5, LXV; 24, Subtitle B |
| Community Planning and Development, Office of Assistant Secretary for | 24, V, VI |
| Equal Opportunity, Office of Assistant Secretary for | 24, I |
| Federal Acquisition Regulation | 48, 24 |
| Federal Housing Enterprise Oversight, Office of | 12, XVII |
| Government National Mortgage Association | 24, III |
| Housing—Federal Housing Commissioner, Office of Assistant Secretary for | 24, II, VIII, X, XX |
| Housing, Office of, and Multifamily Housing Assistance Restructuring, Office of | 24, IV |
| Inspector General, Office of | 24, XII |
| Public and Indian Housing, Office of Assistant Secretary for | 24, IX |
| Secretary, Office of | 24, Subtitle A, VII |
| Housing—Federal Housing Commissioner, Office of Assistant Secretary for | 24, II, VIII, X, XX |
| Housing, Office of, and Multifamily Housing Assistance Restructuring, Office of | 24, IV |
| Immigration and Customs Enforcement Bureau | 19, IV |
| Immigration Review, Executive Office for | 8, V |
| Independent Counsel, Office of | 28, VII |
| Independent Counsel, Offices of | 28, VI |
| Indian Affairs, Bureau of | 25, I, V |
| Indian Affairs, Office of the Assistant Secretary | 25, VI |

| Agency | CFR Title, Subtitle or Chapter |
|---|---|
| Indian Arts and Crafts Board | 25, II |
| Indian Health Service | 25, V |
| Industry and Security, Bureau of | 15, VII |
| Information Resources Management, Office of | 7, XXVII |
| Information Security Oversight Office, National Archives and Records Administration | 32, XX |
| Inspector General | |
| Agriculture Department | 7, XXVI |
| Health and Human Services Department | 42, V |
| Housing and Urban Development Department | 24, XII, XV |
| Institute of Peace, United States | 22, XVII |
| Inter-American Foundation | 5, LXIII; 22, X |
| Interior, Department of | 2, XIV |
| American Indians, Office of the Special Trustee | 25, VII |
| Endangered Species Committee | 50, IV |
| Federal Acquisition Regulation | 48, 14 |
| Federal Property Management Regulations System | 41, 114 |
| Fish and Wildlife Service, United States | 50, I, IV |
| Geological Survey | 30, IV |
| Indian Affairs, Bureau of | 25, I, V |
| Indian Affairs, Office of the Assistant Secretary | 25, VI |
| Indian Arts and Crafts Board | 25, II |
| Land Management, Bureau of | 43, II |
| National Indian Gaming Commission | 25, III |
| National Park Service | 36, I |
| Natural Resource Revenue, Office of | 30, XII |
| Ocean Energy Management, Bureau of | 30, V |
| Reclamation, Bureau of | 43, I |
| Safety and Environmental Enforcement, Bureau of | 30, II |
| Secretary of the Interior, Office of | 2, XIV; 43, Subtitle A |
| Surface Mining Reclamation and Enforcement, Office of | 30, VII |
| Internal Revenue Service | 26, I |
| International Boundary and Water Commission, United States and Mexico, United States Section | 22, XI |
| International Development, United States Agency for | 22, II |
| Federal Acquisition Regulation | 48, 7 |
| International Development Cooperation Agency, United States | 22, XII |
| International Development Finance Corporation, U.S. | 5, XXXIII; 22, VII |
| International Joint Commission, United States and Canada | 22, IV |
| International Organizations Employees Loyalty Board | 5, V |
| International Trade Administration | 15, III; 19, III |
| International Trade Commission, United States | 19, II |
| Interstate Commerce Commission | 5, XL |
| Investment Security, Office of | 31, VIII |
| James Madison Memorial Fellowship Foundation | 45, XXIV |
| Japan–United States Friendship Commission | 22, XVI |
| Joint Board for the Enrollment of Actuaries | 20, VIII |
| Justice, Department of | 2, XXVIII; 5, XXVIII; 28, I, XI; 40, IV |
| Alcohol, Tobacco, Firearms, and Explosives, Bureau of | 27, II |
| Drug Enforcement Administration | 21, II |
| Federal Acquisition Regulation | 48, 28 |
| Federal Claims Collection Standards | 31, IX |
| Federal Prison Industries, Inc. | 28, III |
| Foreign Claims Settlement Commission of the United States | 45, V |
| Immigration Review, Executive Office for | 8, V |
| Independent Counsel, Offices of | 28, VI |
| Prisons, Bureau of | 28, V |
| Property Management Regulations | 41, 128 |
| Labor, Department of | 2, XXIX; 5, XLII |
| Benefits Review Board | 20, VII |
| Employee Benefits Security Administration | 29, XXV |
| Employees' Compensation Appeals Board | 20, IV |
| Employment and Training Administration | 20, V |
| Federal Acquisition Regulation | 48, 29 |

| Agency | CFR Title, Subtitle or Chapter |
|---|---|
| Federal Contract Compliance Programs, Office of | 41, 60 |
| Federal Procurement Regulations System | 41, 50 |
| Labor-Management Standards, Office of | 29, II, IV |
| Mine Safety and Health Administration | 30, I |
| Occupational Safety and Health Administration | 29, XVII |
| Public Contracts | 41, 50 |
| Secretary of Labor, Office of | 29, Subtitle A |
| Veterans' Employment and Training Service, Office of the Assistant Secretary for | 41, 61; 20, IX |
| Wage and Hour Division | 29, V |
| Workers' Compensation Programs, Office of | 20, I, VI |
| Labor-Management Standards, Office of | 29, II, IV |
| Land Management, Bureau of | 43, II |
| Legal Services Corporation | 45, XVI |
| Libraries and Information Science, National Commission on | 45, XVII |
| Library of Congress | 36, VII |
| Copyright Royalty Board | 37, III |
| U.S. Copyright Office | 37, II |
| Management and Budget, Office of | 5, III, LXXVII; 14, VI; 48, 99 |
| Marine Mammal Commission | 50, V |
| Maritime Administration | 46, II |
| Merit Systems Protection Board | 5, II, LXIV |
| Micronesian Status Negotiations, Office for | 32, XXVII |
| Military Compensation and Retirement Modernization Commission | 5, XCIX |
| Millennium Challenge Corporation | 22, XIII |
| Mine Safety and Health Administration | 30, I |
| Minority Business Development Agency | 15, XIV |
| Miscellaneous Agencies | 1, IV |
| Monetary Offices | 31, I |
| Morris K. Udall Scholarship and Excellence in National Environmental Policy Foundation | 36, XVI |
| Museum and Library Services, Institute of | 2, XXXI |
| National Aeronautics and Space Administration | 2, XVIII; 5, LIX; 14, V |
| Federal Acquisition Regulation | 48, 18 |
| National Agricultural Library | 7, XLI |
| National Agricultural Statistics Service | 7, XXXVI |
| National and Community Service, Corporation for | 2, XXII; 45, XII, XXV |
| National Archives and Records Administration | 2, XXVI; 5, LXVI; 36, XII |
| Information Security Oversight Office | 32, XX |
| National Capital Planning Commission | 1, IV, VI |
| National Counterintelligence Center | 32, XVIII |
| National Credit Union Administration | 5, LXXXVI; 12, VII |
| National Crime Prevention and Privacy Compact Council | 28, IX |
| National Drug Control Policy, Office of | 2, XXXVI; 21, III |
| National Endowment for the Arts | 2, XXXII |
| National Endowment for the Humanities | 2, XXXIII |
| National Foundation on the Arts and the Humanities | 45, XI |
| National Geospatial-Intelligence Agency | 32, I |
| National Highway Traffic Safety Administration | 23, II, III; 47, VI; 49, V |
| National Imagery and Mapping Agency | 32, I |
| National Indian Gaming Commission | 25, III |
| National Institute of Food and Agriculture | 7, XXXIV |
| National Institute of Standards and Technology | 15, II; 37, IV |
| National Intelligence, Office of Director of | 5, IV; 32, XVII |
| National Labor Relations Board | 5, LXI; 29, I |
| National Marine Fisheries Service | 50, II, IV |
| National Mediation Board | 5, CI; 29, X |
| National Oceanic and Atmospheric Administration | 15, IX; 50, II, III, IV, VI |
| National Park Service | 36, I |
| National Railroad Adjustment Board | 29, III |
| National Railroad Passenger Corporation (AMTRAK) | 49, VII |
| National Science Foundation | 2, XXV; 5, XLIII; 45, VI |
| Federal Acquisition Regulation | 48, 25 |
| National Security Council | 32, XXI; 47, II |

| Agency | CFR Title, Subtitle or Chapter |
|---|---|
| National Technical Information Service | 15, XI |
| National Telecommunications and Information Administration | 15, XXIII; 47, III, IV, V |
| National Transportation Safety Board | 49, VIII |
| Natural Resource Revenue, Office of | 30, XII |
| Natural Resources Conservation Service | 7, VI |
| Navajo and Hopi Indian Relocation, Office of | 25, IV |
| Navy, Department of | 32, VI |
| Federal Acquisition Regulation | 48, 52 |
| Neighborhood Reinvestment Corporation | 24, XXV |
| Northeast Interstate Low-Level Radioactive Waste Commission | 10, XVIII |
| Nuclear Regulatory Commission | 2, XX; 5, XLVIII; 10, I |
| Federal Acquisition Regulation | 48, 20 |
| Occupational Safety and Health Administration | 29, XVII |
| Occupational Safety and Health Review Commission | 29, XX |
| Ocean Energy Management, Bureau of | 30, V |
| Oklahoma City National Memorial Trust | 36, XV |
| Operations Office | 7, XXVIII |
| Patent and Trademark Office, United States | 37, I |
| Payment From a Non-Federal Source for Travel Expenses | 41, 304 |
| Payment of Expenses Connected With the Death of Certain Employees | 41, 303 |
| Peace Corps | 2, XXXVII; 22, III |
| Pennsylvania Avenue Development Corporation | 36, IX |
| Pension Benefit Guaranty Corporation | 29, XL |
| Personnel Management, Office of | 5, I, IV, XXXV; 45, VIII |
| Federal Acquisition Regulation | 48, 17 |
| Federal Employees Group Life Insurance Federal Acquisition Regulation | 48, 21 |
| Federal Employees Health Benefits Acquisition Regulation | 48, 16 |
| Human Resources Management and Labor Relations Systems, Department of Homeland Security | 5, XCVII |
| Pipeline and Hazardous Materials Safety Administration | 49, I |
| Postal Regulatory Commission | 5, XLVI; 39, III |
| Postal Service, United States | 5, LX; 39, I |
| Postsecondary Education, Office of | 34, VI |
| President's Commission on White House Fellowships | 1, IV |
| Presidential Documents | 3 |
| Presidio Trust | 36, X |
| Prisons, Bureau of | 28, V |
| Privacy and Civil Liberties Oversight Board | 6, X |
| Procurement and Property Management, Office of | 7, XXXII |
| Public and Indian Housing, Office of Assistant Secretary for | 24, IX |
| Public Contracts, Department of Labor | 41, 50 |
| Public Health Service | 42, I |
| Railroad Retirement Board | 20, II |
| Reclamation, Bureau of | 43, I |
| Refugee Resettlement, Office of | 45, IV |
| Relocation Allowances | 41, 302 |
| Research and Innovative Technology Administration | 49, XI |
| Rural Business-Cooperative Service | 7, XVIII, XLII |
| Rural Development Administration | 7, XLII |
| Rural Housing Service | 7, XVIII, XXXV |
| Rural Utilities Service | 7, XVII, XVIII, XLII |
| Safety and Environmental Enforcement, Bureau of | 30, II |
| Science and Technology Policy, Office of, and National Security Council | 32, XXIV; 47, II |
| Secret Service | 31, IV |
| Securities and Exchange Commission | 5, XXXIV; 17, II |
| Selective Service System | 32, XVI |
| Small Business Administration | 2, XXVII; 13, I |
| Smithsonian Institution | 36, V |
| Social Security Administration | 2, XXIII; 20, III; 48, 23 |
| Soldiers' and Airmen's Home, United States | 5, XI |
| Special Counsel, Office of | 5, VIII |
| Special Education and Rehabilitative Services, Office of | 34, III |

| Agency | CFR Title, Subtitle or Chapter |
|---|---|
| State, Department of | 2, VI; 22, I; 28, XI |
| Federal Acquisition Regulation | 48, 6 |
| Surface Mining Reclamation and Enforcement, Office of | 30, VII |
| Surface Transportation Board | 49, X |
| Susquehanna River Basin Commission | 18, VIII |
| Tennessee Valley Authority | 5, LXIX; 18, XIII |
| Trade Representative, United States, Office of | 15, XX |
| Transportation, Department of | 2, XII; 5, L |
| Commercial Space Transportation | 14, III |
| Emergency Management and Assistance | 44, IV |
| Federal Acquisition Regulation | 48, 12 |
| Federal Aviation Administration | 14, I |
| Federal Highway Administration | 23, I, II |
| Federal Motor Carrier Safety Administration | 49, III |
| Federal Railroad Administration | 49, II |
| Federal Transit Administration | 49, VI |
| Great Lakes St. Lawrence Seaway Development Corporation | 33, IV |
| Maritime Administration | 46, II |
| National Highway Traffic Safety Administration | 23, II, III; 47, IV; 49, V |
| Pipeline and Hazardous Materials Safety Administration | 49, I |
| Secretary of Transportation, Office of | 14, II; 49, Subtitle A |
| Transportation Statistics Bureau | 49, XI |
| Transportation, Office of | 7, XXXIII |
| Transportation Security Administration | 49, XII |
| Transportation Statistics Bureau | 49, XI |
| Travel Allowances, Temporary Duty (TDY) | 41, 301 |
| Treasury, Department of the | 2, X; 5, XXI; 12, XV; 17, IV; 31, IX |
| Alcohol and Tobacco Tax and Trade Bureau | 27, I |
| Community Development Financial Institutions Fund | 12, XVIII |
| Comptroller of the Currency | 12, I |
| Customs and Border Protection | 19, I |
| Engraving and Printing, Bureau of | 31, VI |
| Federal Acquisition Regulation | 48, 10 |
| Federal Claims Collection Standards | 31, IX |
| Federal Law Enforcement Training Center | 31, VII |
| Financial Crimes Enforcement Network | 31, X |
| Fiscal Service | 31, II |
| Foreign Assets Control, Office of | 31, V |
| Internal Revenue Service | 26, I |
| Investment Security, Office of | 31, VIII |
| Monetary Offices | 31, I |
| Secret Service | 31, IV |
| Secretary of the Treasury, Office of | 31, Subtitle A |
| Truman, Harry S. Scholarship Foundation | 45, XVIII |
| United States Agency for Global Media | 22, V |
| United States and Canada, International Joint Commission | 22, IV |
| United States and Mexico, International Boundary and Water Commission, United States Section | 22, XI |
| U.S. Copyright Office | 37, II |
| U.S. Office of Special Counsel | 5, CII |
| Utah Reclamation Mitigation and Conservation Commission | 43, III |
| Veterans Affairs, Department of | 2, VIII; 38, I |
| Federal Acquisition Regulation | 48, 8 |
| Veterans' Employment and Training Service, Office of the Assistant Secretary for | 41, 61; 20, IX |
| Vice President of the United States, Office of | 32, XXVIII |
| Wage and Hour Division | 29, V |
| Water Resources Council | 18, VI |
| Workers' Compensation Programs, Office of | 20, I, VII |
| World Agricultural Outlook Board | 7, XXXVIII |

# List of CFR Sections Affected

All changes in this volume of the Code of Federal Regulations (CFR) that were made by documents published in the FEDERAL REGISTER since January 1, 2016 are enumerated in the following list. Entries indicate the nature of the changes effected. Page numbers refer to FEDERAL REGISTER pages. The user should consult the entries for chapters, parts and subparts as well as sections for revisions.

For changes to this volume of the CFR prior to this listing, consult the annual edition of the monthly List of CFR Sections Affected (LSA). The LSA is available at *www.govinfo.gov*. For changes to this volume of the CFR prior to 2001, see the ''List of CFR Sections Affected, 1949–1963, 1964–1972, 1973–1985, and 1986–2000'' published in 11 separate volumes. The ''List of CFR Sections Affected 1986–2000'' is available at *www.govinfo.gov*.

## 2016

## 40 CFR

81 FR Page

Chapter I

63.9983 Heading, (a), (b) and (c) revised; (e) added ..... 20180
63.9991 (c)(1) and (2) revised ..... 20180
63.10000 (a), (c)(1)(i), (2)(iii), (f), (g) and (i)(1) revised; (m) and (n) added..... 20180
63.10001 Removed..... 20181
63.10005 (a) introductory text, (2) introductory text, (i), (ii), (b)(4), (d)(3), (4)(i), (f), (h) introductory text, (3) introductory text, (i)(D) and (iii) introductory text revised; (b)(6) added; (i)(4)(iii) and (iv) removed ..... 20181
63.10006 (f) revised; (j) removed..... 20182
63.10007 (f)(2) revised..... 20182
63.10009 (a)(2) introductory text, (i), (b)(1), (2), (3), (e), (f) introductory text, (2), (g), (j)(1)(ii) and (2) introductory text revised..... 20183
63.10010 (a)(4), (f)(3), (4), (h)(6)(i), (ii), (i)(5)(i)(A), (B), (j)(1)(i), (4)(i)(A), (B) and (l) revised ..... 20185
63.10011 (b), (c), (e) and (g) revised..... 20186
63.10020 (e) revised ..... 20187
63.10021 (d)(3), (e) introductory text, (9) and (h)(1) revised ..... 20187

## 40 CFR—Continued

81 FR Page

Chapter I—Continued

63.10023 (b)(1) removed; (b)(2) introductory text revised..... 20187
63.10030 (e)(1), (7)(i) and (8) revised; (e)(7)(iii) and (f) added..... 20187
63.10031 (c) introductory text, (4) and (5) revised; (c)(6) through (9) added ..... 20188
63.10032 (f) revised..... 20189
63.10042 Amended..... 20189
63.9980—63.10042 (Subpart UUUUU)
Table 1 revised ..... 20190
Table 2 revised ..... 20192
Table 3 revised ..... 20196
Tables 4 and 5 revised..... 20197
Tables 6 and 8 revised..... 20201
Table 9 revised ..... 20202
Appendix A amended..... 20203
Appendix B amended..... 20205
63.11195 (c) and (k) revised ..... 63125
63.11210 (f) through (j) redesignated as (g) through (k); new (f) added; (b), (e), new (j) introductory text, (k) introductory text, (1) and (2) revised ..... 63125
63.11214 (a), (b) and (c) revised..... 63126
63.11220 Revised..... 63126
63.11221 (c) revised ..... 63127
63.11222 (a)(2) revised ..... 63127
63.11223 (c) revised ..... 63127

## 40 CFR—Continued

81 FR Page

Chapter I—Continued

63.11225 (a)(4) introductory text, (b) introductory text, (c)(2)(iv), (e) and (g) introductory text revised ..... 63127
63.11226 Removed ..... 63128
63.11237 Amended ..... 63128
63.11193—63.11237 (Subpart JJJJJJ) Table 1 amended ..... 63129
Table 2 and Table 6 amended ..... 63130
63 Appendix A amended ..... 9352, 59826, 83703
Regulation at 81 FR 9352 withdrawn ..... 23187

# 2017

## 40 CFR

82 FR Page

Chapter I

63.10021 (e)(9) amended ..... 16739
63.10031 (f) introductory text, (1), (2), (4) and (6) introductory text amended ..... 16739
63.9980—63.10042 (Subpart UUUUU) Appendix A amended ..... 16740

# 2018

## 40 CFR

83 FR Page

Chapter I

63.10021 (e)(9) revised ..... 30883
63.10031 (f) introductory text, (1), (2), (4), and (6) introductory text revised ..... 30883
63.9980—63.10042 (Subpart UUUUU) Table 5 amended ..... 56727
63 Appendix A amended ..... 12122, 56730, 58506

# 2019

## 40 CFR

84 FR Page

Chapter I

63.8530—65.8665 (Subpart KKKKK) Table 1 revised ..... 58609
63.8530—65.8665 (Subpart KKKKK) Table 2 revised ..... 58610
63.8530—65.8665 (Subpart KKKKK) Table 4 revised ..... 58611
63.8530—65.8665 (Subpart KKKKK) Table 6 revised ..... 58614
63.8530—65.8665 (Subpart KKKKK) Table 7 revised ..... 58619

## 40 CFR—Continued

84 FR Page

Chapter I—Continued

63.8595 (h) redesignated as (i); new (h) added; (c), new (i) introductory text, and new (1) introductory text revised ..... 58606
63.8620 (e) introductory text, (1), (2), and (3) redesignated as (e)(1) introductory text, (i), (ii), and (iii); new (e)(1) introductory text revised; new (e)(2), (f), and (g) added ..... 58607
63.8630 (c) introductory text revised; (c)(4) added ..... 58608
63.8635 (c) introductory text, (4)(iii)(C), and (g)(1) revised; (c)(9) added ..... 58608
63.8640 (c) introductory text revised; (c)(11) added ..... 58609
63.8665 Amended ..... 58609
63.9495 (a) and (b) revised; (e) added ..... 2750
63.9505 Revised ..... 2750
63.9530 (a)(1) and (e) revised ..... 2751
63.9540 (b)(4), (c)(2), and (d) revised ..... 2751
63.9545 (a)(2) revised; (a)(3) added ..... 2751
63.9480—63.9570 (Subpart QQQQQ) Table 1 amended ..... 2752
63.10021 (e)(9) revised; CFR correction ..... 23727
63.10031 (f) introductory text, (1), (2), (4), and (6) introductory text revised; CFR correction ..... 23727
63 Appendix A amended ..... 7707

# 2020

## 40 CFR

85 FR Page

Chapter I

63.8985 (f) revised ..... 20867
63.9005 (a), (b), (c), (d)(4), (5), and (6) revised ..... 20867
63.9020 (a)(2) and (3) revised ..... 20867
63.9025 (a)(3) revised ..... 20868
63.9030 (c) revised ..... 20868
63.9040 (e) revised; (f) added ..... 20868
63.9045 (f) revised ..... 20868
63.9045 (b) revised ..... 73916
63.9050 (a), (c)(4), (5), (d) introductory text, and (f) introductory text revised; (g) through (n) added ..... 20868
63.9055 (b)(1) revised; (c) and (d) added ..... 20870

## 40 CFR—Continued

85 FR Page

Chapter I—Continued

63.8980—63.9075 (Subpart NNNNN) Table 1 and Table 6 revised ..... 20870
63.8980—63.9075 (Subpart NNNNN) Table 7 amended ..... 20871
63.8980—63.9075 (Subpart NNNNN) Table 7 amended ..... 73916
63.9295 (a) revised ..... 34345
63.9305 Revised ..... 34345
63.9307 (c)(1), (2), and (4) revised ..... 34345
63.9320 (b) and (c) revised ..... 34346
63.9321 (a) introductory text revised ..... 34346
63.9330 (a) revised ..... 34346
63.9340 (c) revised ..... 34346
63.9345 (b)(1) revised ..... 73917
63.9350 (a)(6), (c) introductory text, (d) introductory text, and (e) revised; (a)(7), (c)(5), (d)(11), and (f) through (i) added ..... 34346
63.9355 (a) introductory text, (3), (b)(2), (c) introductory text, (2), and (4) revised; (a)(6), (7), (8), and (c)(5) added ..... 34347
63.9360 (d) added ..... 34348
63.9375 Amended ..... 34348
63.9280—63.9375 (Subpart PPPPP) Table 7 amended ..... 73917
63.9280—63.9375 (Subpart PPPPP) Table 3 amended; Table 4 revised ..... 34348
63.9280—63.9375 (Subpart PPPPP) Table 5 and Table 7 revised ..... 34349
63.9485 (a) revised ..... 73917
63.9535 (c) revised ..... 73917
63.9480—63.9579 (Subpart QQQQQ) Table 1 amended ..... 73917
63.9581 Revised ..... 73917
63.9590 (b)(2) revised ..... 45492
63.9580—63.9652 (Subpart RRRRR) Table 2 amended ..... 73917
63.9600 (a) and (b)(2) introductory text revised ..... 45492
63.9610 (a) introductory text and (c) revised ..... 45492
63.9620 (f) introductory text revised ..... 45492
63.9621 (a), (b)(1), (2), (c)(1), and (2) revised ..... 45492
63.9622 (b) and (d)(2) revised ..... 45493
63.9623 (b)(2) revised ..... 45494
63.9625 Introductory text revised ..... 45494
63.9631 (a) introductory text and (c) revised ..... 45494

## 40 CFR—Continued

85 FR Page

Chapter I—Continued

63.9632 (a)(3) through (8) redesignated as (a)(4) through (9); new (a)(3) added; (a) introductory text, new (4), new (5) introductory text, new (7) introductory text, new (i), (b)(3) through (6), (f)(2), and (4) revised ..... 45494
63.9633 (a) and (b) revised ..... 45496
63.9634 (b)(3), (d) introductory text, (2), (f) introductory text, (1), (3), (4), (h)(1), (j)(1), and (2) revised; (d)(3) added ..... 45496
63.9637 Revised ..... 45497
63.9640 (e)(2) revised ..... 45497
63.9640 (b) revised ..... 73917
63.9641 (a)(2), (4), (b) introductory text, (2), (3), (4), (7), (8) introductory text, (ii) through (vii), (ix), and (c) revised; (f), (g), and (h) added ..... 45498
63.9642 (a) introductory text, (2), and (b)(3) revised; (a)(4), (5), and (6) added ..... 45500
63.9650 Revised ..... 45501
63.9651 (c) introductory text revised; (c)(5) added ..... 45501
63.9652 Amended ..... 45501
63.9580—63.9652 (Subpart RRRRR) Table 2 revised ..... 45501
63.9812 (b) revised ..... 73918
63.9780—63.9824 (Subpart SSSSS) Table 11 amended ..... 73918
63.9930 (b) revised ..... 73918
63.9982 (d) revised ..... 20850
63.9984 (b) and (f) revised; (g) added ..... 20850
63.9990 (a) revised ..... 20850
63.10000 (d)(5)(vi) amended ..... 55757
63.10005 (a)(2) introductory text amended; (b) introductory text and (h)(3)(iii) revised ..... 55757
63.10009 (a)(2) and (b)(2) introductory text and (3) amended ..... 55757
63.10010 (h)(5), (6), (7), (i), and (j)(4) revised ..... 55758
63.10011 (e) and (g)(3) revised ..... 55759
63.10020 (a), (b), and (d) revised ..... 55759
63.10021 (e)(9), (f), and (i) revised; (h)(3) removed ..... 55759
63.10030 (e) introductory text, (7)(iii)(B), and (C) amended; (e)(7) introductory text, (iii) introductory text, and (A)(*3*) revised; (e)(7)(i) removed ..... 55760

## 40 CFR—Continued

85 FR Page

Chapter I—Continued

63.10031 (a), (b) introductory text, (1), (2), (4), (5), (c) introductory text, (d), (e), (f) introductory text, (1), (2), (4), (6) introductory text, (vii), (xi), and (g) revised; (b)(6), (c)(10), and (h) through (k) added; (c)(5)(iii), (iv), (v), (f)(3) removed ..... 55760
63.10032 (a) introductory text and (1) revised ..... 55763
63.10042 Amended ..... 55763
63.10042 Amended ..... 20850
63.9980—63.10042 (Subpart UUUUU) Table 2 revised ..... 20850
63.10382—63.10448 (Subpart WWWWW) Table 1 amended ..... 73918
63.10885 (a)(1) revised ..... 56101
63.10890 (c) introductory text, (d), (e)(3), (f), and (i) revised; (j) added ..... 56101
63.10896 (c) added ..... 56101
63.10897 (d)(1)(i), (3) introductory text, and (g) revised ..... 56102
63.10898 (c) revised ..... 56102
63.10899 (a), (b) introductory text, (2), and (c) revised; (b)(14), (15), (e), (f), and (g) added ..... 56102
63.10905 (c) introductory text revised; (c)(7) added ..... 56104
63.10906 Amended ..... 56104
63.9980—63.10043 (Subpart UUUUU) Table 3 amended ..... 55763
63.9980—63.10043 (Subpart UUUUU) Table 8 revised ..... 55764
63.9980—63.10043 (Subpart UUUUU) Table 9 amended ..... 55765
63.9980—63.10043 (Subpart UUUUU) Appendix A and Appendix B amended ..... 55766
63.9980—63.10043 (Subpart UUUUU) Appendix C added ..... 55769
63.9980—63.10043 (Subpart UUUUU) Appendix D added ..... 55774

## 40 CFR—Continued

85 FR Page

Chapter I—Continued

63.9980—63.10043 (Subpart UUUUU) Appendix E added ..... 55775
63.10880—63.10906 (Subpart ZZZZZ) Table 3 revised ..... 56105
63.11086 (e) introductory text revised ..... 73919
63.11080—63.11100 (Subpart BBBBBB) Table 3 amended ..... 73919
63.11124 (a)(1) introductory text and (b)(1) introductory text revised ..... 73919
63.11110—63.11132 (Subpart CCCCCC) Table 3 amended ..... 73919
63.11175 (a) introductory text amended ..... 73920
63.11169—63.11180 (Subpart HHHHHH) Table 1 amended ..... 73920
63.11425 (b) and (c) revised ..... 73920
63.11432 (b) introductory text and (c) revised ..... 73920
63.11441 (a) revised ..... 73920
63.11469 (a) revised ..... 73921
63.11509 (a)(3) revised ..... 73921
63.11519 (a)(1) introductory text revised ..... 73921
63.11529 (a) revised ..... 73921
63.11564 (a)(2) revised ..... 73921
63.11585 (b)(1) revised ..... 73921
63.11603 (a)(1) introductory text revised ..... 73921
63.11860—63.12099 (Subpart HHHHHHH) Table 4 amended ..... 73921
63 Appendix A amended ..... 63419
63 Correction: Appendix A corrected ..... 77384

## 2021

(No regulations published from January 1, 2021, through July 1, 2021)