AUTHENTICATED
U.S. GOVERNMENT
INFORMATION
GPO

of a food described in this section shall be exempt from declaration of the statements which paragraphs (a) and (b) of this section require immediately following the name of the food. Such exemption shall not apply to the outer container or wrapper of a multiunit retail package.

(e) All salt, table salt, iodized salt, or iodized table salt in packages intended for retail sale shipped in interstate commerce 18 months after the date of publication of this statement of policy in the FEDERAL REGISTER, shall be labeled as prescribed by this section; and if not so labeled, the Food and Drug Administration will regard them as misbranded within the meaning of sections 403 (a) and (f) of the Federal Food, Drug, and Cosmetic Act.

[42 FR 14306, Mar. 15, 1977, as amended at 48 FR 10811, Mar. 15, 1983; 49 FR 24119, June 12, 1984; 81 FR 59131, Aug. 29, 2016]

PART 101—FOOD LABELING

Subpart A—General Provisions

Sec.
101.1 Principal display panel of package form food.
101.2 Information panel of package form food.
101.3 Identity labeling of food in packaged form.
101.4 Food; designation of ingredients.
101.5 Food; name and place of business of manufacturer, packer, or distributor.
101.7 Declaration of net quantity of contents.
101.8 Vending machines.
101.9 Nutrition labeling of food.
101.10 Nutrition labeling of restaurant foods whose labels or labeling bear nutrient content claims or health claims.
101.11 Nutrition labeling of standard menu items in covered establishments.
101.12 Reference amounts customarily consumed per eating occasion.
101.13 Nutrient content claims—general principles.
101.14 Health claims: general requirements.
101.15 Food; prominence of required statements.
101.17 Food labeling warning, notice, and safe handling statements.
101.18 Misbranding of food.

Subpart B—Specific Food Labeling Requirements

101.22 Foods; labeling of spices, flavorings, colorings and chemical preservatives.
101.30 Percentage juice declaration for foods purporting to be beverages that contain fruit or vegetable juice.

Subpart C—Specific Nutrition Labeling Requirements and Guidelines

101.36 Nutrition labeling of dietary supplements.
101.42 Nutrition labeling of raw fruit, vegetables, and fish.
101.43 Substantial compliance of food retailers with the guidelines for the voluntary nutrition labeling of raw fruit, vegetables, and fish.
101.44 Identification of the 20 most frequently consumed raw fruit, vegetables, and fish in the United States.
101.45 Guidelines for the voluntary nutrition labeling of raw fruit, vegetables, and fish.

Subpart D—Specific Requirements for Nutrient Content Claims

101.54 Nutrient content claims for ''good source,'' ''high,'' ''more,'' and ''high potency.''
101.56 Nutrient content claims for ''light'' or ''lite.''
101.60 Nutrient content claims for the calorie content of foods.
101.61 Nutrient content claims for the sodium content of foods.
101.62 Nutrient content claims for fat, fatty acid, and cholesterol content of foods.
101.65 Implied nutrient content claims and related label statements.
101.67 Use of nutrient content claims for butter.
101.69 Petitions for nutrient content claims.

Subpart E—Specific Requirements for Health Claims

101.70 Petitions for health claims.
101.71 Health claims: claims not authorized.
101.72 Health claims: calcium, vitamin D, and osteoporosis.
101.73 Health claims: dietary lipids and cancer.
101.74 Health claims: sodium and hypertension.
101.75 Health claims: dietary saturated fat and cholesterol and risk of coronary heart disease.
101.76 Health claims: fiber-containing grain products, fruits, and vegetables and cancer.
101.77 Health claims: fruits, vegetables, and grain products that contain fiber, particularly soluble fiber, and risk of coronary heart disease.
101.78 Health claims: fruits and vegetables and cancer.
101.79 Health claims: Folate and neural tube defects.

101.80 Health claims: dietary noncariogenic carbohydrate sweeteners and dental caries.
101.81 Health claims: Soluble fiber from certain foods and risk of coronary heart disease (CHD).
101.82 Health claims: Soy protein and risk of coronary heart disease (CHD).
101.83 Health claims: plant sterol/stanol esters and risk of coronary heart disease (CHD).

Subpart F—Specific Requirements for Descriptive Claims That Are Neither Nutrient Content Claims nor Health Claims

101.91 Gluten-free labeling of food.
101.93 Certain types of statements for dietary supplements.
101.95 ''Fresh,'' ''freshly frozen,'' ''fresh frozen,'' ''frozen fresh.''

Subpart G—Exemptions From Food Labeling Requirements

101.100 Food; exemptions from labeling.
101.108 Temporary exemptions for purposes of conducting authorized food labeling experiments.
APPENDIX A TO PART 101—MONIER-WILLIAMS PROCEDURE (WITH MODIFICATIONS) FOR SULFITES IN FOOD, CENTER FOR FOOD SAFETY AND APPLIED NUTRITION, FOOD AND DRUG ADMINISTRATION (NOVEMBER 1985)
APPENDIX B TO PART 101—GRAPHIC ENHANCEMENTS USED BY THE FDA
APPENDIX C TO PART 101—NUTRITION FACTS FOR RAW FRUITS AND VEGETABLES
APPENDIX D TO PART 101—NUTRITION FACTS FOR COOKED FISH

AUTHORITY: 15 U.S.C. 1453, 1454, 1455; 21 U.S.C. 321, 331, 342, 343, 348, 371; 42 U.S.C. 243, 264, 271.

SOURCE: 42 FR 14308, Mar. 15, 1977, unless otherwise noted.

EDITORIAL NOTE: Nomenclature changes to part 101 appear at 63 FR 14035, Mar. 24, 1998, 66 FR 17358, Mar. 30, 2001, 66 FR 56035, Nov. 6, 2001, and 81 FR 49895, July 29, 2016.

Subpart A—General Provisions

§ 101.1 Principal display panel of package form food.

The term *principal display panel* as it applies to food in package form and as used in this part, means the part of a label that is most likely to be displayed, presented, shown, or examined under customary conditions of display for retail sale. The principal display panel shall be large enough to accommodate all the mandatory label information required to be placed thereon by this part with clarity and conspicuousness and without obscuring design, vignettes, or crowding. Where packages bear alternate principal display panels, information required to be placed on the principal display panel shall be duplicated on each principal display panel. For the purpose of obtaining uniform type size in declaring the quantity of contents for all packages of substantially the same size, the term *area of the principal display panel* means the area of the side or surface that bears the principal display panel, which area shall be:

(a) In the case of a rectangular package where one entire side properly can be considered to be the principal display panel side, the product of the height times the width of that side;

(b) In the case of a cylindrical or nearly cylindrical container, 40 percent of the product of the height of the container times the circumference;

(c) In the case of any otherwise shaped container, 40 percent of the total surface of the container: *Provided, however,* That where such container presents an obvious ''principal display panel'' such as the top of a triangular or circular package of cheese, the area shall consist of the entire top surface. In determining the area of the principal display panel, exclude tops, bottoms, flanges at tops and bottoms of cans, and shoulders and necks of bottles or jars. In the case of cylindrical or nearly cylindrical containers, information required by this part to appear on the principal display panel shall appear within that 40 percent of the circumference which is most likely to be displayed, presented, shown, or examined under customary conditions of display for retail sale.

§ 101.2 Information panel of package form food.

(a) The term *information panel* as it applies to packaged food means that part of the label immediately contiguous and to the right of the principal display panel as observed by an individual facing the principal display panel with the following exceptions:

(1) If the part of the label immediately contiguous and to the right of

the principal display panel is too small to accommodate the necessary information or is otherwise unusable label space, e.g., folded flaps or can ends, the panel immediately contiguous and to the right of this part of the label may be used.

(2) If the package has one or more alternate principal display panels, the information panel is immediately contiguous and to the right of any principal display panel.

(3) If the top of the container is the principal display panel and the package has no alternate principal display panel, the information panel is any panel adjacent to the principal display panel.

(b) All information required to appear on the label of any package of food under §§ 101.4, 101.5, 101.8, 101.9, 101.13, 101.17, 101.36, subpart D of part 101, and part 105 of this chapter shall appear either on the principal display panel or on the information panel, unless otherwise specified by regulations in this chapter.

(c) All information appearing on the principal display panel or the information panel pursuant to this section shall appear prominently and conspicuously, but in no case may the letters and/or numbers be less than one-sixteenth inch in height unless an exemption pursuant to paragraph (f) of this section is established. The requirements for conspicuousness and legibility shall include the specifications of §§ 101.7(h)(1) and (2) and 101.15.

(1)(i) Soft drinks packaged in bottles manufactured before October 31, 1975 shall be exempt from the requirements prescribed by this section to the extent that information which is blown, lithographed, or formed onto the surface of the bottle is exempt from the size and placement requirements of this section.

(ii) Soft drinks packaged in bottles shall be exempt from the size and placement requirements prescribed by this section if all of the following conditions are met:

(A) If the soft drink is packaged in a bottle bearing a paper, plastic foam jacket, or foil label, or is packaged in a nonreusable bottle bearing a label lithographed onto the surface of the bottle or is packaged in metal cans, the product shall not be exempt from any requirement of this section other than the exemptions created by § 1.24(a)(5)(ii) and (v) of this chapter and the label shall bear all required information in the specified minimum type size, except the label will not be required to bear the information required by § 101.5 if this information appears on the bottle closure or on the lid of the can in a type size not less than one-sixteenth inch in height, or if embossed on the lid of the can in a type size not less than one-eighth inch in height.

(B) If the soft drink is packaged in a bottle which does not bear a paper, plastic foam jacket or foil label, or is packaged in a reusable bottle bearing a label lithographed onto the surface of the bottle:

(*1*) Neither the bottle nor the closure is required to bear nutrition labeling in compliance with § 101.9, except that any multiunit retail package in which it is contained shall bear nutrition labeling if required by § 101.9; and any vending machine in which it is contained shall bear nutrition labeling if nutrition labeling is not present on the bottle or closure, if required by § 101.9.

(*2*) All other information pursuant to this section shall appear on the top of the bottle closure prominently and conspicuously in letters and/or numbers no less than one thirty-second inch in height, except that if the information required by § 101.5 is placed on the side of the closure in accordance with § 1.24(a)(5)(ii) of this chapter, such information shall appear in letters and/or numbers no less than one-sixteenth inch in height.

(*3*) Upon the petition of any interested person demonstrating that the bottle closure is too small to accommodate this information, the Commissioner may by regulation establish an alternative method of disseminating such information. Information appearing on the closure shall appear in the following priority:

(*i*) The statement of ingredients.

(*ii*) The name and address of the manufacturer, packer, or distributor.

(*iii*) The statement of identity.

(2) Individual serving-size packages of food served with meals in restaurants, institutions, and on board passenger carriers, and not intended

for sale at retail, are exempt from type-size requirements of this paragraph, provided:

(i) The package has a total area of 3 square inches or less available to bear labeling;

(ii) There is insufficient area on the package available to print all required information in a type size of 1/16 inch in height;

(iii) The information required by paragraph (b) of this section appears on the label in accordance with the provisions of this paragraph, except that the type size is not less than 1/32 inch in height.

(d)(1) Except as provided by §§ 101.9(j)(13) and (j)(17) and 101.36(i)(2) and (i)(5), all information required to appear on the principal display panel or on the information panel under this section shall appear on the same panel unless there is insufficient space. In determining the sufficiency of the available space, except as provided by §§ 101.9(j)(17) and 101.36(i)(5), any vignettes, designs, and other nonmandatory label information shall not be considered. If there is insufficient space for all of this information to appear on a single panel, it may be divided between these two panels, except that the information required under any given section or part shall all appear on the same panel. A food whose label is required to bear the ingredient statement on the principal display panel may bear all other information specified in paragraph (b) of this section on the information panel.

(2) Any food, not otherwise exempted in this section, if packaged in a container consisting of a separate lid and body, and bearing nutrition labeling pursuant to § 101.9, and if the lid qualifies for and is designed to serve as a principal display panel, shall be exempt from the placement requirements of this section in the following respects:

(i) The name and place of business information required by § 101.5 shall not be required on the body of the container if this information appears on the lid in accordance with this section.

(ii) The nutrition information required by § 101.9 shall not be required on the lid if this information appears on the container body in accordance with this section.

(iii) The statement of ingredients required by § 101.4 shall not be required on the lid if this information appears on the container body in accordance with this section. Further, the statement of ingredients is not required on the container body if this information appears on the lid in accordance with this section.

(e) All information appearing on the information panel pursuant to this section shall appear in one place without other intervening material.

(f) If the label of any package of food is too small to accommodate all of the information required by §§ 101.4, 101.5, 101.8, 101.9, 101.13, 101.17, 101.36, subpart D of part 101, and part 105 of this chapter, the Commissioner may establish by regulation an acceptable alternative method of disseminating such information to the public, e.g., a type size smaller than one-sixteenth inch in height, or labeling attached to or inserted in the package or available at the point of purchase. A petition requesting such a regulation, as an amendment to this paragraph, shall be submitted under part 10 of this chapter.

[42 FR 14308, Mar. 15, 1977, as amended at 42 FR 15673, Mar. 22, 1977; 42 FR 45905, Sept. 13, 1977; 42 FR 47191, Sept. 20, 1977; 44 FR 16006, Mar. 16, 1979; 49 FR 13339, Apr. 4, 1984; 53 FR 16068, May 5, 1988; 58 FR 44030, Aug. 18, 1993; 60 FR 17205, Apr. 5, 1995; 62 FR 43074, Aug. 12, 1997; 62 FR 49847, Sept. 23, 1997; 63 FR 14817, Mar. 27, 1998; 81 FR 59131, Aug. 29, 2016]

§ 101.3 Identity labeling of food in packaged form.

(a) The principal display panel of a food in package form shall bear as one of its principal features a statement of the identity of the commodity.

(b) Such statement of identity shall be in terms of:

(1) The name now or hereafter specified in or required by any applicable Federal law or regulation; or, in the absence thereof,

(2) The common or usual name of the food; or, in the absence thereof,

(3) An appropriately descriptive term, or when the nature of the food is obvious, a fanciful name commonly used by the public for such food.

(c) Where a food is marketed in various optional forms (whole, slices, diced, etc.), the particular form shall be considered to be a necessary part of the statement of identity and shall be declared in letters of a type size bearing a reasonable relation to the size of the letters forming the other components of the statement of identity; except that if the optional form is visible through the container or is depicted by an appropriate vignette, the particular form need not be included in the statement. This specification does not affect the required declarations of identity under definitions and standards for foods promulgated pursuant to section 401 of the act.

(d) This statement of identity shall be presented in bold type on the principal display panel, shall be in a size reasonably related to the most prominent printed matter on such panel, and shall be in lines generally parallel to the base on which the package rests as it is designed to be displayed.

(e) Under the provisions of section 403(c) of the Federal Food, Drug, and Cosmetic Act, a food shall be deemed to be misbranded if it is an imitation of another food unless its label bears, in type of uniform size and prominence, the word ''imitation'' and, immediately thereafter, the name of the food imitated.

(1) A food shall be deemed to be an imitation and thus subject to the requirements of section 403(c) of the act if it is a substitute for and resembles another food but is nutritionally inferior to that food.

(2) A food that is a substitute for and resembles another food shall not be deemed to be an imitation provided it meets each of the following requirements:

(i) It is not nutritionally inferior to the food for which it substitutes and which it resembles.

(ii) Its label bears a common or usual name that complies with the provisions of § 102.5 of this chapter and that is not false or misleading, or in the absence of an existing common or usual name, an appropriately descriptive term that is not false or misleading. The label may, in addition, bear a fanciful name which is not false or misleading.

(3) A food for which a common or usual name is established by regulation (e.g., in a standard of identity pursuant to section 401 of the act, in a common or usual name regulation pursuant to part 102 of this chapter, or in a regulation establishing a nutritional quality guideline pursuant to part 104 of this chapter), and which complies with all of the applicable requirements of such regulation(s), shall not be deemed to be an imitation.

(4) Nutritional inferiority includes:

(i) Any reduction in the content of an essential nutrient that is present in a measurable amount, but does not include a reduction in the caloric or fat content provided the food is labeled pursuant to the provisions of § 101.9, and provided the labeling with respect to any reduction in caloric content complies with the provisions applicable to caloric content in part 105 of this chapter.

(ii) For the purpose of this section, a measurable amount of an essential nutrient in a food shall be considered to be 2 percent or more of the Daily Reference Value (DRV) of protein listed under § 101.9(c)(7)(iii) and of potassium listed under § 101.9(c)(9) per reference amount customarily consumed and 2 percent or more of the Reference Daily Intake (RDI) of any vitamin or mineral listed under § 101.9(c)(8)(iv) per reference amount customarily consumed, except that selenium, molybdenum, chromium, and chloride need not be considered.

(iii) If the Commissioner concludes that a food is a substitute for and resembles another food but is inferior to the food imitated for reasons other than those set forth in this paragraph, he may propose appropriate revisions to this regulation or he may propose a separate regulation governing the particular food.

(f) A label may be required to bear the percentage(s) of a characterizing ingredient(s) or information concerning the presence or absence of an ingredient(s) or the need to add an ingredient(s) as part of the common or usual name of the food pursuant to subpart B of part 102 of this chapter.

(g) Dietary supplements shall be identified by the term ''dietary supplement'' as a part of the statement of

identity, except that the word ''dietary'' may be deleted and replaced by the name of the dietary ingredients in the product (e.g., calcium supplement) or an appropriately descriptive term indicating the type of dietary ingredients that are in the product (e.g., herbal supplement with vitamins).

[42 FR 14308, Mar. 15, 1977, as amended at 48 FR 10811, Mar. 15, 1983; 58 FR 2227, Jan. 6, 1993; 60 FR 67174, Dec. 28, 1995; 62 FR 49847, Sept. 23, 1997]

§ 101.4 Food; designation of ingredients.

(a)(1) Ingredients required to be declared on the label or labeling of a food, including foods that comply with standards of identity, except those ingredients exempted by § 101.100, shall be listed by common or usual name in descending order of predominance by weight on either the principal display panel or the information panel in accordance with the provisions of § 101.2, except that ingredients in dietary supplements that are listed in the nutrition label in accordance with § 101.36 need not be repeated in the ingredient list. Paragraph (g) of this section describes the ingredient list on dietary supplement products.

(2) The descending order of predominance requirements of paragraph (a)(1) of this section do not apply to ingredients present in amounts of 2 percent or less by weight when a listing of these ingredients is placed at the end of the ingredient statement following an appropriate quantifying statement, e.g., ''Contains __ percent or less of _____'' or ''Less than __ percent of _____.'' The blank percentage within the quantifying statement shall be filled in with a threshold level of 2 percent, or, if desired, 1.5 percent, 1.0 percent, or 0.5 percent, as appropriate. No ingredient to which the quantifying phrase applies may be present in an amount greater than the stated threshold.

(b) The name of an ingredient shall be a specific name and not a collective (generic) name, except that:

(1) Spices, flavorings, colorings and chemical preservatives shall be declared according to the provisions of § 101.22.

(2) An ingredient which itself contains two or more ingredients and which has an established common or usual name, conforms to a standard established pursuant to the Meat Inspection or Poultry Products Inspection Acts by the U.S. Department of Agriculture, or conforms to a definition and standard of identity established pursuant to section 401 of the Federal Food, Drug, and Cosmetic Act, shall be designated in the statement of ingredients on the label of such food by either of the following alternatives:

(i) By declaring the established common or usual name of the ingredient followed by a parenthetical listing of all ingredients contained therein in descending order of predominance except that, if the ingredient is a food subject to a definition and standard of identity established in subchapter B of this chapter that has specific labeling provisions for optional ingredients, optional ingredients may be declared within the parenthetical listing in accordance with those provisions.

(ii) By incorporating into the statement of ingredients in descending order of predominance in the finished food, the common or usual name of every component of the ingredient without listing the ingredient itself.

(3) Skim milk, concentrated skim milk, reconstituted skim milk, and nonfat dry milk may be declared as ''skim milk'' or ''nonfat milk''.

(4) Milk, concentrated milk, reconstituted milk, and dry whole milk may be declared as ''milk''.

(5) Bacterial cultures may be declared by the word ''cultured'' followed by the name of the substrate, e.g., ''made from cultured skim milk or cultured buttermilk''.

(6) Sweetcream buttermilk, concentrated sweetcream buttermilk, reconstituted sweetcream buttermilk, and dried sweetcream buttermilk may be declared as ''buttermilk''.

(7) Whey, concentrated whey, reconstituted whey, and dried whey may be declared as ''whey''.

(8) Cream, reconstituted cream, dried cream, and plastic cream (sometimes known as concentrated milk fat) may be declared as ''cream''.

(9) Butteroil and anhydrous butterfat may be declared as ''butterfat''.

(10) Dried whole eggs, frozen whole eggs, and liquid whole eggs may be declared as ''eggs''.

(11) Dried egg whites, frozen egg whites, and liquid egg whites may be declared as ''egg whites''.

(12) Dried egg yolks, frozen egg yolks, and liquid egg yolks may be declared as ''egg yolks''.

(13) [Reserved]

(14) Each individual fat and/or oil ingredient of a food intended for human consumption shall be declared by its specific common or usual name (e.g., ''beef fat'', ''cottonseed oil'') in its order of predominance in the food except that blends of fats and/or oils may be designated in their order of predominance in the foods as ''_____ shortening'' or ''blend of _____ oils'', the blank to be filled in with the word ''vegetable'', ''animal'', ''marine'', with or without the terms ''fat'' or ''oils'', or combination of these, whichever is applicable if, immediately following the term, the common or usual name of each individual vegetable, animal, or marine fat or oil is given in parentheses, e.g., ''vegetable oil shortening (soybean and cottonseed oil)''. For products that are blends of fats and/or oils and for foods in which fats and/or oils constitute the predominant ingredient, i.e., in which the combined weight of all fat and/or oil ingredients equals or exceeds the weight of the most predominant ingredient that is not a fat or oil, the listing of the common or usual names of such fats and/or oils in parentheses shall be in descending order of predominance. In all other foods in which a blend of fats and/or oils is used as an ingredient, the listing of the common or usual names in parentheses need not be in descending order of predominance if the manufacturer, because of the use of varying mixtures, is unable to adhere to a constant pattern of fats and/or oils in the product. If the fat or oil is completely hydrogenated, the name shall include the term *hydrogenated*, or if partially hydrogenated, the name shall include the term *partially hydrogenated*. If each fat and/or oil in a blend or the blend is completely hydrogenated, the term ''hydrogenated'' may precede the term(s) describing the blend, e.g., ''hydrogenated vegetable oil (soybean, cottonseed, and palm oils)'', rather than preceding the name of each individual fat and/or oil; if the blend of fats and/or oils is partially hydrogenated, the term ''partially hydrogenated'' may be used in the same manner. Fat and/or oil ingredients not present in the product may be listed if they may sometimes be used in the product. Such ingredients shall be identified by words indicating that they may not be present, such as ''or'', ''and/or'', ''contains one or more of the following:'', e.g., ''vegetable oil shortening (contains one or more of the following: cottonseed oil, palm oil, soybean oil)''. No fat or oil ingredient shall be listed unless actually present if the fats and/or oils constitute the predominant ingredient of the product, as defined in this paragraph (b)(14).

(15) When all the ingredients of a wheat flour are declared in an ingredient statement, the principal ingredient of the flour shall be declared by the name(s) specified in §§ 137.105, 137.200, 137.220 and 137.225 of this chapter, i.e., the first ingredient designated in the ingredient list of flour, or bromated flour, or enriched flour, or self-rising flour is ''flour'', ''white flour'', ''wheat flour'', or ''plain flour''; the first ingredient designated in the ingredient list of durum flour is ''durum flour''; the first ingredient designated in the ingredient list of whole wheat flour, or bromated whole wheat flour is ''whole wheat flour'', ''graham flour'', or ''entire wheat flour''; and the first ingredient designated in the ingredient list of whole durum wheat flour is ''whole durum wheat flour''.

(16) Ingredients that act as leavening agents in food may be declared in the ingredient statement by stating the specific common or usual name of each individual leavening agent in parentheses following the collective name ''leavening'', e.g., ''leavening (baking soda, monocalcium phosphate, and calcium carbonate)''. The listing of the common or usual name of each individual leavening agent in parentheses shall be in descending order of predominance: *Except*, That if the manufacturer is unable to adhere to a constant pattern of leavening agents in the product, the listing of individual

leavening agents need not be in descending order of predominance. Leavening agents not present in the product may be listed if they are sometimes used in the product. Such ingredients shall be identified by words indicating that they may not be present, such as ''or'', ''and/or'', ''contains one or more of the following:''.

(17) Ingredients that act as yeast nutrients in foods may be declared in the ingredient statement by stating the specific common or usual name of each individual yeast nutrient in parentheses following the collective name ''yeast nutrients'', e.g., ''yeast nutrients (calcium sulfate and ammonium phosphate)''. The listing of the common or usual name of each individual yeast nutrient in parentheses shall be in descending order of predominance: *Except*, That if the manufacturer is unable to adhere to a constant pattern of yeast nutrients in the product, the listing of the common or usual names of individual yeast nutrients need not be in descending order of predominance. Yeast nutrients not present in the product may be listed if they are sometimes used in the product. Such ingredients shall be identified by words indicating that they may not be present, such as ''or'', ''and/or'', or ''contains one or more of the following:''.

(18) Ingredients that act as dough conditioners may be declared in the ingredient statement by stating the specific common or usual name of each individual dough conditioner in parentheses following the collective name ''dough conditioner'', e.g., ''dough conditioners (L-cysteine, ammonium sulfate)''. The listing of the common or usual name of each dough conditioner in parentheses shall be in descending order of predominance: *Except*, That if the manufacturer is unable to adhere to a constant pattern of dough conditioners in the product, the listing of the common or usual names of individual dough conditioners need not be in descending order of predominance. Dough conditioners not present in the product may be listed if they are sometimes used in the product. Such ingredients shall be identified by words indicating that they may not be present, such as ''or'', ''and/or'', or ''contains one or more of the following:''.

(19) Ingredients that act as firming agents in food (e.g., salts of calcium and other safe and suitable salts in canned vegetables) may be declared in the ingredient statement, in order of predominance appropriate for the total of all firming agents in the food, by stating the specific common or usual name of each individual firming agent in descending order of predominance in parentheses following the collective name ''firming agents''. If the manufacturer is unable to adhere to a constant pattern of firming agents in the food, the listing of the individual firming agents need not be in descending order of predominance. Firming agents not present in the product may be listed if they are sometimes used in the product. Such ingredients shall be identified by words indicating that they may not be present, such as ''or'', ''and/or'', ''contains one or more of the following:''.

(20) For purposes of ingredient labeling, the term *sugar* shall refer to sucrose, which is obtained from sugar cane or sugar beets in accordance with the provisions of §184.1854 of this chapter.

(21) [Reserved]

(22) Wax and resin ingredients on fresh produce when such produce is held for retail sale, or when held for other than retail sale by packers or repackers shall be declared collectively by the phrase ''coated with food-grade animal-based wax, to maintain freshness'' or the phrase ''coated with food-grade vegetable-, petroleum-, beeswax-, and/or shellac-based wax or resin, to maintain freshness'' as appropriate. The terms ''food-grade'' and ''to maintain freshness'' are optional. The term *lac-resin* may be substituted for the term *shellac*.

(23) When processed seafood products contain fish protein ingredients consisting primarily of the myofibrillar protein fraction from one or more fish species and the manufacturer is unable to adhere to a constant pattern of fish species in the fish protein ingredient, because of seasonal or other limitations of species availability, the common or usual name of each individual fish species need not be listed in descending order of predominance. Fish species not present in the fish protein

ingredient may be listed if they are sometimes used in the product. Such ingredients must be identified by words indicating that they may not be present, such as ''or'', ''and/or'', or ''contains one or more of the following:'' Fish protein ingredients may be declared in the ingredient statement by stating the specific common or usual name of each fish species that may be present in parentheses following the collective name ''fish protein'', e.g., ''fish protein (contains one or more of the following: Pollock, cod, and/or pacific whiting)''.

(c) When water is added to reconstitute, completely or partially, an ingredient permitted by paragraph (b) of this section to be declared by a class name, the position of the ingredient class name in the ingredient statement shall be determined by the weight of the unreconstituted ingredient plus the weight of the quantity of water added to reconstitute that ingredient, up to the amount of water needed to reconstitute the ingredient to single strength. Any water added in excess of the amount of water needed to reconstitute the ingredient to single strength shall be declared as ''water'' in the ingredient statement.

(d) When foods characterized on the label as ''nondairy'' contain a caseinate ingredient, the caseinate ingredient shall be followed by a parenthetical statement identifying its source. For example, if the manufacturer uses the term ''nondairy'' on a creamer that contains sodium caseinate, it shall include a parenthetical term such as ''a milk derivative'' after the listing of sodium caseinate in the ingredient list.

(e) If the percentage of an ingredient is included in the statement of ingredients, it shall be shown in parentheses following the name of the ingredient and expressed in terms of percent by weight. Percentage declarations shall be expressed to the nearest 1 percent, except that where ingredients are present at levels of 2 percent or less, they may be grouped together and expressed in accordance with the quantifying guidance set forth in paragraph (a)(2) of this section.

(f) Except as provided in §101.100, ingredients that must be declared on labeling because there is no label for the food, including foods that comply with standards of identity, shall be listed prominently and conspicuously by common or usual name in the manner prescribed by paragraph (b) of this section.

(g) When present, the ingredient list on dietary supplement products shall be located immediately below the nutrition label, or, if there is insufficient space below the nutrition label, immediately contiguous and to the right of the nutrition label and shall be preceded by the word ''Ingredients,'' unless some ingredients (i.e., sources) are identified within the nutrition label in accordance with §101.36(d), in which case the ingredients listed outside the nutrition label shall be in a list preceded by the words ''Other ingredients.'' Ingredients in dietary supplements that are not dietary ingredients or that do not contain dietary ingredients, such as excipients, fillers, artificial colors, artificial sweeteners, flavors, or binders, shall be included in the ingredient list.

(h) The common or usual name of ingredients of dietary supplements that are botanicals (including fungi and algae) shall be consistent with the names standardized in *Herbs of Commerce,* 1992 edition, which is incorporated by reference in accordance with 5 U.S.C. 552(a) and 1 CFR part 51. Copies may be obtained from the American Herbal Products Association, 8484 Georgia Ave., suite 370, Silver Spring, MD 20910, 301-588-1171, FAX 301-588-1174, e-mail: *ahpa@ahpa.org,* or may be examined at the Food and Drug Administration's Main Library, 10903 New Hampshire Ave., Bldg. 2, Third Floor, Silver Spring, MD 20993, 301–796–2039, or at the National Archives and Records Administration (NARA). For information on the availability of this material at NARA, call 202–741–6030, or go to: *http://www.archives.gov/federal_register/ code_of_federal_ regulations/ibr_locations.html.* The listing of these names on the label shall be followed by statements of:

(1) The part of the plant (e.g., root, leaves) from which the dietary ingredient is derived (e.g., ''Garlic bulb'' or ''Garlic (bulb)''), except that this designation is not required for algae. The name of the part of the plant shall be

expressed in English (e.g., ''flower'' rather than ''flos'');

(2) The Latin binomial name of the plant, in parentheses, except that this name is not required when it is available in the reference entitled: *Herbs of Commerce* for the common or usual name listed on the label, and, when required, the Latin binomial name may be listed before the part of the plant. Any name in Latin form shall be in accordance with internationally accepted rules on nomenclature, such as those found in the *International Code of Botanical Nomenclature* and shall include the designation of the author or authors who published the Latin name, when a positive identification cannot be made in its absence. The *International Code of Botanical Nomenclature* (Tokyo Code), 1994 edition, a publication of the International Association for Plant Taxonomy, is incorporated by reference in accordance with 5 U.S.C. 552(a) and 1 CFR part 51. Copies of the *International Code of Botanical Nomenclature* may be obtained from Koeltz Scientific Books, D–61453 Konigstein, Germany, and University Bookstore, Southern Illinois University, Carbondale, IL 62901–4422, 618–536–3321, FAX 618–453–5207, or may be examined at the Food and Drug Administration's Main Library, 10903 New Hampshire Ave., Bldg. 2, Third Floor, Silver Spring, MD 20993, 301–796–2039, or at the National Archives and Records Administration (NARA). For information on the availability of this material at NARA, call 202–741–6030, or go to: *http://www.archives.gov/federal_register/code_of_federal_regulations/ibr_locations.html*.

(3) On labels of single-ingredient dietary supplements that do not include an ingredient list, the identification of the Latin binomial name, when needed, and the part of the plant may be prominently placed on the principal display panel or information panel, or included in the nutrition label.

[42 FR 14308, Mar. 15, 1977, as amended at 43 FR 12858, Mar. 28, 1978; 43 FR 24519, June 6, 1978; 48 FR 8054, Feb. 25, 1983; 55 FR 17433, Apr. 25, 1990; 58 FR 2875, Jan. 6, 1993; 62 FR 49847, Sept. 23, 1997; 62 FR 64634, Dec. 8, 1997; 64 FR 50448, Sept. 17, 1999; 66 FR 17358, Mar. 30, 2001; 66 FR 66742, Dec. 27, 2001; 68 FR 15355, Mar. 31, 2003; 81 FR 5590, Feb. 3, 2016]

§ 101.5 Food; name and place of business of manufacturer, packer, or distributor.

(a) The label of a food in packaged form shall specify conspicuously the name and place of business of the manufacturer, packer, or distributor.

(b) The requirement for declaration of the name of the manufacturer, packer, or distributor shall be deemed to be satisfied, in the case of a corporation, only by the actual corporate name, which may be preceded or followed by the name of the particular division of the corporation. In the case of an individual, partnership, or association, the name under which the business is conducted shall be used.

(c) Where the food is not manufactured by the person whose name appears on the label, the name shall be qualified by a phrase that reveals the connection such person has with such food; such as ''Manufactured for _____'', ''Distributed by _____'', or any other wording that expresses the facts.

(d) The statement of the place of business shall include the street address, city, State, and ZIP code; however, the street address may be omitted if it is shown in a current city directory or telephone directory. The requirement for inclusion of the ZIP code shall apply only to consumer commodity labels developed or revised after the effective date of this section. In the case of nonconsumer packages, the ZIP code shall appear either on the label or the labeling (including invoice).

(e) If a person manufactures, packs, or distributes a food at a place other than his principal place of business, the label may state the principal place of business in lieu of the actual place where such food was manufactured or packed or is to be distributed, unless such statement would be misleading.

§ 101.7 Declaration of net quantity of contents.

(a) The principal display panel of a food in package form shall bear a declaration of the net quantity of contents. This shall be expressed in the terms of weight, measure, numerical count, or a combination of numerical count and weight or measure. The statement shall be in terms of fluid

measure if the food is liquid, or in terms of weight if the food is solid, semisolid, or viscous, or a mixture of solid and liquid; except that such statement may be in terms of dry measure if the food is a fresh fruit, fresh vegetable, or other dry commodity that is customarily sold by dry measure. If there is a firmly established general consumer usage and trade custom of declaring the contents of a liquid by weight, or a solid, semisolid, or viscous product by fluid measure, it may be used. Whenever the Commissioner determines that an existing practice of declaring net quantity of contents by weight, measure, numerical count, or a combination in the case of a specific packaged food does not facilitate value comparisons by consumers and offers opportunity for consumer confusion, he will by regulation designate the appropriate term or terms to be used for such commodity.

(b)(1) Statements of weight shall be in terms of avoirdupois pound and ounce.

(2) Statements of fluid measure shall be in terms of the U.S. gallon of 231 cubic inches and quart, pint, and fluid ounce subdivisions thereof, and shall:

(i) In the case of frozen food that is sold and consumed in a frozen state, express the volume at the frozen temperature.

(ii) In the case of refrigerated food that is sold in the refrigerated state, express the volume at 40 °F (4 °C).

(iii) In the case of other foods, express the volume at 68 °F (20 °C).

(3) Statements of dry measure shall be in terms of the U.S. bushel of 2,150.42 cubic inches and peck, dry quart, and dry pint subdivisions thereof.

(c) When the declaration of quantity of contents by numerical count does not give adequate information as to the quantity of food in the package, it shall be combined with such statement of weight, measure, or size of the individual units of the foods as will provide such information.

(d) The declaration may contain common or decimal fractions. A common fraction shall be in terms of halves, quarters, eighths, sixteenths, or thirty-seconds; except that if there exists a firmly established general consumer usage and trade custom of employing different common fractions in the net quantity declaration of a particular commodity, they may be employed. A common fraction shall be reduced to its lowest terms; a decimal fraction shall not be carried out to more than two places. A statement that includes small fractions of an ounce shall be deemed to permit smaller variations than one which does not include such fractions.

(e) The declaration shall be located on the principal display panel of the label, and with respect to packages bearing alternate principal panels it shall be duplicated on each principal display panel.

(f) The declaration shall appear as a distinct item on the principal display panel, shall be separated (by at least a space equal to the height of the lettering used in the declaration) from other printed label information appearing above or below the declaration and (by at least a space equal to twice the width of the letter ''N'' of the style of type used in the quantity of contents statement) from other printed label information appearing to the left or right of the declaration. It shall not include any term qualifying a unit of weight, measure, or count (such as ''jumbo quart'' and ''full gallon'') that tends to exaggerate the amount of the food in the container. It shall be placed on the principal display panel within the bottom 30 percent of the area of the label panel in lines generally parallel to the base on which the package rests as it is designed to be displayed: *Provided,* That on packages having a principal display panel of 5 square inches or less, the requirement for placement within the bottom 30 percent of the area of the label panel shall not apply when the declaration of net quantity of contents meets the other requirements of this part.

(g) The declaration shall accurately reveal the quantity of food in the package exclusive of wrappers and other material packed therewith: *Provided,* That in the case of foods packed in containers designed to deliver the food under pressure, the declaration shall state the net quantity of the contents that will be expelled when the instructions for use as shown on the container

are followed. The propellant is included in the net quantity declaration.

(h) The declaration shall appear in conspicuous and easily legible boldface print or type in distinct contrast (by typography, layout, color, embossing, or molding) to other matter on the package; except that a declaration of net quantity blown, embossed, or molded on a glass or plastic surface is permissible when all label information is so formed on the surface. Requirements of conspicuousness and legibility shall include the specifications that:

(1) The ratio of height to width (of the letter) shall not exceed a differential of 3 units to 1 unit (no more than 3 times as high as it is wide).

(2) Letter heights pertain to upper case or capital letters. When upper and lower case or all lower case letters are used, it is the lower case letter ''o'' or its equivalent that shall meet the minimum standards.

(3) When fractions are used, each component numeral shall meet one-half the minimum height standards.

(i) The declaration shall be in letters and numerals in a type size established in relationship to the area of the principal display panel of the package and shall be uniform for all packages of substantially the same size by complying with the following type specifications:

(1) Not less than one-sixteenth inch in height on packages the principal display panel of which has an area of 5 square inches or less.

(2) Not less than one-eighth inch in height on packages the principal display panel of which has an area of more than 5 but not more than 25 square inches.

(3) Not less than three-sixteenths inch in height on packages the principal display panel of which has an area of more than 25 but not more than 100 square inches.

(4) Not less than one-fourth inch in height on packages the principal display panel of which has an area of more than 100 square inches, except not less than ½ inch in height if the area is more than 400 square inches.

Where the declaration is blown, embossed, or molded on a glass or plastic surface rather than by printing, typing, or coloring, the lettering sizes specified in paragraphs (h)(1) through (4) of this section shall be increased by one-sixteenth of an inch.

(j) On packages containing less than 4 pounds or 1 gallon and labeled in terms of weight or fluid measure:

(1) The declaration shall be expressed both in ounces, with identification by weight or by liquid measure and, if applicable (1 pound or 1 pint or more) followed in parentheses by a declaration in pounds for weight units, with any remainder in terms of ounces or common or decimal fractions of the pound (see examples set forth in paragraphs (m)(1) and (2) of this section), or in the case of liquid measure, in the largest whole units (quarts, quarts and pints, or pints, as appropriate) with any remainder in terms of fluid ounces or common or decimal fractions of the pint or quart (see examples in paragraphs (m) (3) and (4) of this section).

(2) If the net quantity of contents declaration appears on a random package, that is a package which is one of a lot, shipment, or delivery of packages of the same consumer commodity with varying weights and with no fixed weight pattern, it may, when the net weight exceeds 1 pound, be expressed in terms of pounds and decimal fractions of the pound carried out to not more than two decimal places. When the net weight does not exceed 1 pound, the declaration on the random package may be in decimal fractions of the pound in lieu of ounces (see example in paragraph (m)(5) of this section).

(3) The declaration may appear in more than one line. The term ''net weight'' shall be used when stating the net quantity of contents in terms of weight. Use of the terms ''net'' or ''net contents'' in terms of fluid measure or numerical count is optional. It is sufficient to distinguish avoirdupois ounce from fluid ounce through association of terms; for example, ''Net wt. 6 oz'' or ''6 oz Net wt.'' and ''6 fl oz'' or ''Net contents 6 fl oz''.

(k) On packages containing 4 pounds or 1 gallon or more and labeled in terms of weight or fluid measure, the declaration shall be expressed in pounds for weight units with any remainder in terms of ounces or common or decimal fraction of the pound, or in the case of fluid measure, it shall be

expressed in the largest whole unit (gallons followed by common or decimal fraction of a gallon or by the next smaller whole unit or units (quarts, or quarts and pints)) with any remainder in terms of fluid ounces or common or decimal fractions of the pint or quart (see paragraph (m)(6) of this section).

(l) [Reserved]

(m) Examples:

(1) A declaration of 1½ pounds weight shall be expressed as ''Net Wt. 24 oz (1 lb 8 oz),'' ''Net Wt. 24 oz (1½ lb),'' or ''Net Wt. 24 oz (1.5 lb)''.

(2) A declaration of three-fourths pound avoirdupois weight shall be expressed as ''Net Wt. 12 oz''.

(3) A declaration of 1 quart liquid measure shall be expressed as ''Net 32 fl oz (1 qt)''.

(4) A declaration of 1¾ quarts liquid measure shall be expressed as ''Net contents 56 fluid ounces (1 quart 1½ pints)'' or as ''Net 56 fluid oz (1 qt 1 pt 8 oz)'', but not in terms of quart and ounce such as ''Net 56 fluid oz (1 quart 24 ounces)''.

(5) On a random package, declaration of three-fourths pound avoirdupois may be expressed as ''Net Wt. .75 lb''.

(6) A declaration of 2½ gallons liquid measure shall be expressed as ''Net contents 2½ gallons,'' ''Net contents 2.5 gallons,'' or ''Net contents 2 gallons 2 quarts'' and not as ''2 gallons 4 pints''.

(n) For quantities, the following abbreviations and none other may be employed (periods and plural forms are optional):

weight wt	pint pt
ounce oz	quart qt
pound lb	fluid fl
gallon gal	

(o) Nothing in this section shall prohibit supplemental statements at locations other than the principal display panel(s) describing in nondeceptive terms the net quantity of contents; *Provided,* that such supplemental statements of net quantity of contents shall not include any term qualifying a unit of weight, measure, or count that tends to exaggerate the amount of the food contained in the package; for example, ''jumbo quart'' and ''full gallon''. Dual or combination declarations of net quantity of contents as provided for in paragraphs (a), (c), and (j) of this section (for example, a combination of net weight plus numerical count, net contents plus dilution directions of a concentrate, etc.) are not regarded as supplemental net quantity statements and may be located on the principal display panel.

(p) A separate statement of the net quantity of contents in terms of the metric system is not regarded as a supplemental statement and an accurate statement of the net quantity of contents in terms of the metric system of weight or measure may also appear on the principal display panel or on other panels.

(q) The declaration of net quantity of contents shall express an accurate statement of the quantity of contents of the package. Reasonable variations caused by loss or gain of moisture during the course of good distribution practice or by unavoidable deviations in good manufacturing practice will be recognized. Variations from stated quantity of contents shall not be unreasonably large.

(r) The declaration of net quantity of contents on pickles and pickle products, including relishes but excluding one or two whole pickles in clear plastic bags which may be declared by count, shall be expressed in terms of the U.S. gallon of 231 cubic inches and quart, pint, and fluid ounce subdivisions thereof.

(s) On a multiunit retail package, a statement of the quantity of contents shall appear on the outside of the package and shall include the number of individual units, the quantity of each individual unit, and, in parentheses, the total quantity of contents of the multiunit package in terms of avoirdupois or fluid ounces, except that such declaration of total quantity need not be followed by an additional parenthetical declaration in terms of the largest whole units and subdivisions thereof, as required by paragraph (j)(1) of this section. A multiunit retail package may thus be properly labeled: ''6–16 oz bottles—(96 fl oz)'' or ''3–16 oz cans—(net wt. 48 oz)''. For the purposes of this section, ''multiunit retail package'' means a package containing two or more individually packaged units of the identical commodity and in the same quantity, intended to be sold as part of the multiunit retail package

but capable of being individually sold in full compliance with all requirements of the regulations in this part. Open multiunit retail packages that do not obscure the number of units or prevent examination of the labeling on each of the individual units are not subject to this paragraph if the labeling of each individual unit complies with the requirements of paragraphs (f) and (i) of this section. The provisions of this section do not apply to that butter or margarine covered by the exemptions in §1.24(a) (10) and (11) of this chapter.

(t) Where the declaration of net quantity of contents is in terms of net weight and/or drained weight or volume and does not accurately reflect the actual quantity of the contents or the product falls below the applicable standard of fill of container because of equipment malfunction or otherwise unintentional product variation, and the label conforms in all other respects to the requirements of this chapter (except the requirement that food falling below the applicable standard of fill of container shall bear the general statement of substandard fill specified in §130.14(b) of this chapter), the mislabeled food product, including any food product that fails to bear the general statement of substandard fill specified in §130.14(b) of this chapter, may be sold by the manufacturer or processor directly to institutions operated by Federal, State or local governments (schools, prisons, hospitals, etc.): *Provided*, That:

(1) The purchaser shall sign a statement at the time of sale stating that he is aware that the product is mislabeled to include acknowledgment of the nature and extent of the mislabeling, (e.g., ''Actual net weight may be as low as __% below labeled quantity'') and that any subsequent distribution by him of said product except for his own institutional use is unlawful. This statement shall be kept on file at the principal place of business of the manufacturer or processor for 2 years subsequent to the date of shipment of the product and shall be available to the Food and Drug Administration upon request.

(2) The product shall be labeled on the outside of its shipping container with the statement(s):

(i) When the variation concerns net weight and/or drained weight or volume, ''Product Mislabeled. Actual net weight (drained weight or volume where appropriate) may be as low as __% below labeled quantity. This Product Not for Retail Distribution'', the blank to be filled in with the maximum percentage variance between the labeled and actual weight or volume of contents of the individual packages in the shipping container, and

(ii) When the variation is in regard to a fill of container standard, ''Product Mislabeled. Actual fill may be as low as __% below standard of fill. This Product Not for Retail Distribution''.

(3) The statements required by paragraphs (t)(2) (i) and (ii) of this section, which may be consolidated where appropriate, shall appear prominently and conspicuously as compared to other printed matter on the shipping container and in boldface print or type on a clear, contrasting background in order to render them likely to be read and understood by the purchaser under ordinary conditions of purchase.

[42 FR 14308, Mar. 15, 1977, as amended at 42 FR 15673, Mar. 22, 1977. Redesignated at 81 FR 59131, Aug. 29, 2016]

§ 101.8 Vending machines.

(a) *Definitions*. The definitions of terms in section 201 of the Federal Food, Drug, and Cosmetic Act apply to such terms when used in this section. In addition, for the purposes of this section:

Authorized official of a vending machine operator means an owner, operator, agent in charge, or any other person authorized by a vending machine operator who is not otherwise subject to section 403(q)(5)(H)(viii) of the Federal Food, Drug, and Cosmetic Act (21 U.S.C. 343(q)(5)(H)(viii)), to register the vending machine operator with the Food and Drug Administration (''FDA'') for purposes of paragraph (d) of this section.

Vending machine means a self-service machine that, upon insertion of a coin, paper currency, token, card, or key, or by optional manual operation, dispenses servings of food in bulk or in

packages, or prepared by the machine, without the necessity of replenishing the machine between each vending operation.

Vending machine operator means a person(s) or entity that controls or directs the function of the vending machine, including deciding which articles of food are sold from the machine or the placement of the articles of food within the vending machine, and is compensated for the control or direction of the function of the vending machine.

(b) *Articles of food not covered.* Articles of food sold from a vending machine are not covered vending machine food if:

(1) The prospective purchaser can view:

(i) The calories, serving size, and servings per container listed in the Nutrition Facts label on the vending machine food without any obstruction. The Nutrition Facts label must be in the format required in § 101.9(c) and (d). The Nutrition Facts label must be in a size that permits the prospective purchaser to be able to easily read the nutrition information contained in the Nutrition Facts label on the article of food in the vending machine. Smaller formats allowed for Nutrition Facts for certain food labeling under FDA regulation at § 101.9 are not considered to be a size that a prospective purchaser is able to easily read; or

(ii) The calories, serving size, and servings per container listed in a reproduction of the Nutrition Facts label on the vending machine food, provided that the reproduction is a reproduction of an actual Nutrition Facts label that complies with § 101.9 for a vending machine food, is presented in a size that permits the prospective purchaser to be able to easily read the nutrition information, and the calories, serving size, and servings per container are displayed by the vending machine before the prospective purchaser makes his or her purchase; or

(2) The prospective purchaser can otherwise view visible nutrition information, including, at a minimum, the total number of calories for the article of food as sold at the point of purchase. This visible nutrition information must appear on the food label itself. The visible nutrition information must be clear and conspicuous and able to be easily read on the article of food while in the vending machine, in a type size at least 150 percent of the size required by § 101.7(i) for the net quantity of contents declaration on the front of the package, and with sufficient color and contrasting background to other print on the label to permit the prospective purchaser to clearly distinguish the information.

(c) *Requirements for calorie labeling for certain food sold from vending machines*—(1) *Applicability; covered vending machine food.* For the purposes of this section, the term ''covered vending machine food'' means an article of food that is:

(i) Sold from a vending machine that does not permit the prospective purchaser to examine the Nutrition Facts label prior to purchase as provided in paragraph (b)(1) of this section or otherwise provide visible nutrition information at the point of purchase as provided in paragraph (b)(2) of this section; and

(ii) Sold from a vending machine that:

(A) Is operated by a person engaged in the business of owning or operating 20 or more vending machines; or

(B) Is operated by a vending machine operator that has voluntarily elected to be subject to the requirements of this section by registering with FDA under paragraph (d) of this section.

(2) *Calorie declaration.* (i) The number of calories for a covered vending machine food must be declared in the following manner:

(A) To the nearest 5-calorie increment up to and including 50 calories and 10-calorie increment above 50 calories, except that amounts less than 5 calories may be expressed as zero.

(B) The term ''Calories'' or ''Cal'' must appear adjacent to the caloric content value for each food in the vending machine.

(C) The calorie declaration for a packaged food must include the total calories present in the packaged food, regardless of whether the packaged food contains a single serving or multiple servings. The vending machine

operator may voluntarily disclose calories per serving in addition to the total calories for the food.

(D) If a covered vending machine food is one where the prospective purchaser selects among options to produce a final vended product (*e.g.*, vended coffee, hot chocolate or tea with options for added sugar, sugar substitute, milk, and cream), calories must be declared per option or for the final vended products.

(ii) Calorie declarations for covered vending machine food must be clear and conspicuous and placed prominently in the following manner:

(A) The calorie declarations may be placed on a sign in close proximity to the article of food or selection button, *i.e.*, in, on, or adjacent to the vending machine, but not necessarily attached to the vending machine, so long as the calorie declaration is visible at the same time as the food, its name, price, selection button, or selection number is visible. The sign must give calorie declarations for those articles of food that are sold from that particular vending machine.

(B) When the calorie declaration is in or on the vending machine, the calorie declaration must be in a type size no smaller than the name of the food on the machine (not the label), selection number, or price of the food as displayed on the vending machine, whichever is smallest, with the same prominence, *i.e.*, the same color, or in a color at least as conspicuous, as the color of the name, if applicable, or price of the food or selection number, and the same contrasting background, or a background at least as contrasting as the background used for the item it is in closest proximity to, *i.e.*, name, selection number, or price of the food item as displayed on the machine.

(C) When the calorie declaration is on a sign adjacent to the vending machine, the calorie declaration must be in a type size large enough to render it likely to be read and understood by the prospective purchaser under customary conditions of purchase and use, and in a type that is all black or one color on a white or other neutral background that contrasts with the type color.

(D) Where the vending machine only displays a picture or other representation or name of the food item, the calorie declaration must be in close proximity to the picture or other representation or name, or in close proximity to the selection button.

(E) For electronic vending machines (*e.g.*, machines with digital or electronic or liquid crystal display (LCD) displays), the calorie declaration must be displayed before the prospective purchaser makes his or her purchase.

(F) For vending machines with few choices, *e.g.*, popcorn, the calorie declaration may appear on the face of the machine so long as the declaration is prominent, not crowded by other labeling on the machine, and the type size is no smaller than the name of the food on the machine (not the label), selection number, or price of the food as displayed on the vending machine, whichever is smallest.

(d) *Voluntary provision of calorie labeling for foods sold from vending machines*—(1) *Applicability*. A vending machine operator that is not subject to the requirements of section 403(q)(5)(H)(viii) of the Federal Food, Drug, and Cosmetic Act may, through its authorized official, voluntarily register with FDA to be subject to the requirements established in paragraph (c)(2) of this section. An authorized official of a vending machine operator that voluntarily registers cannot be subject to any State or local nutrition labeling requirements that are not identical to the requirements in 403(q)(5)(H) of the Federal Food, Drug, and Cosmetic Act.

(2) *Who may register*? A vending machine operator that is not otherwise subject to the requirements of section 403(q)(5)(H) of the Federal Food, Drug, and Cosmetic Act may register with FDA.

(3) *What information is required*? The vending machine operator must provide FDA with the following information:

(i) The contact information (including name, address, phone number, email address), for the vending machine operator;

(ii) The address of the location of each vending machine owned or operated by the vending machine operator that is being registered;

(iii) Preferred mailing address (if different from the vending machine operator address), for purposes of receiving correspondence; and

(iv) Certification that the information submitted is true and accurate, that the person or firm submitting it is authorized to do so, and that each registered vending machine will be subject to the requirements of this section.

(v) Information should be submitted by email by typing complete information into the portable document format (PDF) form, saving it on the registrant's computer, and sending it by email to *menulawregistration@fda.hhs.gov*. If email is not available, the registrant can either fill in the PDF form and print it out (or print out the blank PDF and fill in the information by hand or typewriter), and either fax the completed form to 301–436–2804 or mail it to FDA, CFSAN Menu and Vending Machine Labeling Registration, White Oak Building 22, rm. 0209, 10903 New Hampshire Ave., Silver Spring, MD 20993.

(vi) Authorized officials of a vending machine operator who elect to be subject to the Federal requirements can register by visiting *http://www.fda.gov/food/ingredientspackaginglabeling/labelingnutrition/ucm217762.htm*. FDA has created a form that contains fields requesting the information in paragraph (d) of this section and made the form available at this Web site. Registrants must use this form to ensure that complete information is submitted.

(vii) To keep the establishment's registration active, the authorized official of the vending machine operator must register every other year within 60 days prior to the expiration of the vending machine operator's current registration with FDA. Registration will automatically expire if not renewed.

(e) *Vending machine operator contact information*. (1) A vending machine operator that is subject to section 403(q)(5)(H)(viii) of the Federal Food, Drug, and Cosmetic Act or a vending machine operator that voluntarily registers to be subject to the requirements under paragraph (d) of this section must provide its contact information for vending machines selling covered vending machine food. The contact information must list the vending machine operator's name, telephone number, and mailing address or email address.

(2) The contact information must be readable and may be placed on the face of the vending machine, or otherwise must be placed with the calorie declarations as described in paragraph (c)(2)(ii) of this section (*i.e.*, on the sign in, on, or adjacent to the vending machine).

(f) *Signatures*. Signatures obtained under paragraph (d) of this section that meet the definition of electronic signatures in § 11.3(b)(7) of this chapter are exempt from the requirements of part 11 of this chapter.

[79 FR 71291, Dec. 1, 2014, as amended at 84 FR 57610, Oct. 28, 2019]

§ 101.9 Nutrition labeling of food.

(a) Nutrition information relating to food shall be provided for all products intended for human consumption and offered for sale unless an exemption is provided for the product in paragraph (j) of this section.

(1) When food is in package form, the required nutrition labeling information shall appear on the label in the format specified in this section.

(2) When food is not in package form, the required nutrition labeling information shall be displayed clearly at the point of purchase (e.g., on a counter card, sign, tag affixed to the product, or some other appropriate device). Alternatively, the required information may be placed in a booklet, looseleaf binder, or other appropriate format that is available at the point of purchase.

(3) Solicitation of requests for nutrition information by a statement ''For nutrition information write to _____ '' on the label or in the labeling or advertising for a food, or providing such information in a direct written reply to a solicited or unsolicited request, does not subject the label or the labeling of a food exempted under paragraph (j) of this section to the requirements of this section if the reply to the request conforms to the requirements of this section.

(4) If any vitamin or mineral is added to a food so that a single serving provides 50 percent or more of the Reference Daily Intake (RDI) for the age group for which the product is intended, as specified in paragraph (c)(8)(iv) of this section, of any one of the added vitamins or minerals, unless such addition is permitted or required in other regulations, e.g., a standard of identity or nutritional quality guideline, or is otherwise exempted by the Commissioner, the food shall be considered a food for special dietary use within the meaning of § 105.3(a)(1)(iii) of this chapter.

(b) Except as provided in § 101.9(h)(3), all nutrient and food component quantities shall be declared in relation to a serving as defined in this section.

(1) The term *serving* or *serving size* means an amount of food customarily consumed per eating occasion by persons 4 years of age or older which is expressed in a common household measure that is appropriate to the food. When the food is specially formulated or processed for use by infants or by toddlers, a serving or serving size means an amount of food customarily consumed per eating occasion by infants up to 12 months of age or by children 1 through 3 years of age, respectively.

(2) Except as provided in paragraphs (b)(3), (b)(4), and (b)(6) of this section and for products that are intended for weight control and are available only through a weight-control or weight-maintenance program, serving size declared on a product label shall be determined from the ''Reference Amounts Customarily Consumed Per Eating Occasion * * * *'' (reference amounts) that appear in § 101.12(b) using the procedures described below. For products that are both intended for weight control and available only through a weight-control program, a manufacturer may determine the serving size that is consistent with the meal plan of the program. Such products must bear a statement, ''for sale only through the _____ program'' (fill in the blank with the name of the appropriate weight-control program, e.g., Smith's Weight Control), on the principal display panel. However, the reference amounts in § 101.12(b) shall be used for purposes of evaluating whether weight-control products that are available only through a weight-control program qualify for nutrient content claims or health claims.

(i) For products in discrete units (e.g., muffins, sliced products, such as sliced bread, or individually packaged products within a multiserving package) and for products which consist of two or more foods packaged and presented to be consumed together where the ingredient represented as the main ingredient is in discrete units (e.g., pancakes and syrup), the serving size shall be declared as follows:

(A) If a unit weighs 50 percent or less of the reference amount, the serving size shall be the number of whole units that most closely approximates the reference amount for the product category;

(B) If a unit weighs more than 50 percent, but less than 67 percent of the reference amount, the manufacturer may declare one unit or two units as the serving size;

(C) If a unit weighs 67 percent or more, but less than 200 percent of the reference amount, the serving size shall be one unit;

(D) If a unit weighs at least 200 percent and up to and including 300 percent of the applicable reference amount, the serving size shall be the amount that approximates the reference amount. In addition to providing a column within the Nutrition Facts label that lists the quantitative amounts and percent Daily Values per serving size, the manufacturer shall provide a column within the Nutrition Facts label that lists the quantitative amounts and percent Daily Values per individual unit. The first column would be based on the serving size for the product and the second column would be based on the individual unit. The exemptions in paragraphs (b)(12)(i)(A), (B), and (C) of this section apply to this provision.

(E) The serving size for maraschino cherries shall be expressed as 1 cherry with the parenthetical metric measure equal to the average weight of a medium size cherry.

(F) The serving size for products that naturally vary in size (e.g., pickles, shellfish, whole fish, and fillet of fish)

may be the amount in ounces that most closely approximates the reference amount for the product category. Manufacturers shall adhere to the requirements in paragraph (b)(5)(vi) of this section for expressing the serving size in ounces.

(G) For products which consist of two or more foods packaged and presented to be consumed together where the ingredient represented as the main ingredient is in discrete units (e.g., pancakes and syrup), the serving size may be the number of discrete units represented as the main ingredient plus proportioned minor ingredients used to make the reference amount for the combined product determined in § 101.12(f).

(H) For packages containing several individual single-serving containers, each of which is labeled with all required information including nutrition labeling as specified in § 101.9 (that is, are labeled appropriately for individual sale as single-serving containers), the serving size shall be 1 unit.

(ii) For products in large discrete units that are usually divided for consumption (e.g., cake, pie, pizza, melon, cabbage), for unprepared products where the entire contents of the package is used to prepare large discrete units that are usually divided for consumption (e.g., cake mix, pizza kit), and for products which consist of two or more foods packaged and presented to be consumed together where the ingredient represented as the main ingredient is a large discrete unit usually divided for consumption (e.g., prepared cake packaged with a can of frosting), the serving size shall be the fractional slice of the ready-to-eat product (e.g., 1/12 cake, 1/8 pie, 1/4 pizza, 1/4 melon, 1/6 cabbage) that most closely approximates the reference amount for the product category, and may be the fraction of the package used to make the reference amount for the unprepared product determined in § 101.12(c) or the fraction of the large discrete unit represented as the main ingredient plus proportioned minor ingredients used to make the reference amount for the combined product determined in § 101.12(f). In expressing the fractional slice, manufacturers shall use 1/2, 1/3, 1/4, 1/5, 1/6, or smaller fractions that can be generated by further division by 2 or 3.

(iii) For nondiscrete bulk products (e.g., breakfast cereal, flour, sugar, dry mixes, concentrates, pancake mixes, macaroni and cheese kits), and for products which consist of two or more foods packaged and presented to be consumed together where the ingredient represented as the main ingredient is a bulk product (e.g., peanut butter and jelly), the serving size shall be the amount in household measure that most closely approximates the reference amount for the product category and may be the amount of the bulk product represented as the main ingredient plus proportioned minor ingredients used to make the reference amount for the combined product determined in § 101.12(f).

(3) The serving size for meal products and main dish products as defined in § 101.13 (l) and (m) that comes in single-serving containers as defined in paragraph (b)(6) of this section shall be the entire content (edible portion only) of the package. Serving size for meal products and main dish products in multiserving containers shall be based on the reference amount applicable to the product in § 101.12(b) if the product is listed in § 101.12(b). Serving size for meal products and main dish products in multiserving containers that are not listed in § 101.12(b) shall be based on the reference amount according to § 101.12(f).

(4) A variety pack, such as a package containing several varieties of single-serving units as defined in paragraph (b)(2)(i) of this section, and a product having two or more compartments with each compartment containing a different food, shall provide nutrition information for each variety or food per serving size that is derived from the reference amount in § 101.12(b) applicable for each variety or food and the procedures to convert the reference amount to serving size in paragraph (b)(2) of this section.

(5) For labeling purposes, the term *common household measure* or *common household unit* means cup, tablespoon, teaspoon, piece, slice, fraction (e.g., 1/4 pizza), ounce (oz), fluid ounce (fl oz), or other common household equipment used to package food products (e.g., jar,

tray). In expressing serving size in household measures, except as specified in paragraphs (b)(5)(iv), (b)(5)(v), (b)(5)(vi), and (b)(5)(vii) of this section, the following rules shall be used:

(i) Cups, tablespoons, or teaspoons shall be used wherever possible and appropriate except for beverages. For beverages, a manufacturer may use fluid ounces. Cups shall be expressed in 1/4- or 1/3-cup increments. Tablespoons shall be expressed as 1, 1 1/3, 1 1/2, 1 2/3, 2, or 3 tablespoons. Teaspoons shall be expressed as 1/8, 1/4, 1/2, 3/4, 1, or 2 teaspoons.

(ii) If cups, tablespoons or teaspoons are not applicable, units such as piece, slice, tray, jar, and fraction shall be used.

(iii) If paragraphs (b)(5)(i) and (b)(5)(ii) of this section are not applicable, ounces may be used with an appropriate visual unit of measure such as a dimension of a piece, e.g., 1 oz (28 g/about ½ pickle). Ounce measurements shall be expressed in 0.5 oz increments most closely approximating the reference amount.

(iv) A description of the individual container or package shall be used for single serving containers and for individually packaged products within multiserving containers (e.g., can, box, package). A description of the individual unit shall be used for other products in discrete units (e.g., piece, slice, cracker, bar).

(v) For unprepared products where the entire contents of the package is used to prepare large discrete units that are usually divided for consumption (e.g., cake mix, pizza kit), the fraction or portion of the package may be used.

(vi) Ounces with an appropriate visual unit of measure, as described in paragraph (b)(5)(iii) of this section, may be used for products that naturally vary in size as provided for in paragraph (b)(2)(i)(F) of this section.

(vii) As provided for in § 101.9(h)(1), for products that consist of two or more distinct ingredients or components packaged and presented to be consumed together (e.g. dry macaroni and cheese mix, cake and muffin mixes with separate ingredient packages, pancakes and syrup), nutrition information may be declared for each component or as a composite. The serving size may be provided in accordance with the provisions of paragraphs (b)(2)(i), (b)(2)(ii), and (b)(2)(iii) of this section, or alternatively in ounces with an appropriate visual unit of measure, as described in paragraph (b)(5)(iii) of this section (e.g., declared as separate components: ''3 oz dry macaroni (84 g/about ⅔ cup)'' and ''1 oz dry cheese mix (28 g/about 2 tbsp);'' declared as a composite value: ''4 oz (112 g/about ⅔ cup macaroni and 2 tbsp dry cheese mix)'').

(viii) For nutrition labeling purposes, a teaspoon means 5 milliliters (mL), a tablespoon means 15 mL, a cup means 240 mL, 1 fl oz means 30 mL, and 1 oz in weight means 28 g.

(ix) When a serving size, determined from the reference amount in § 101.12(b) and the procedures described in this section, falls exactly half way between two serving sizes, e.g., 2.5 tbsp, manufacturers shall round the serving size up to the next incremental size.

(6) A product that is packaged and sold individually that contains less than 200 percent of the applicable reference amount must be considered to be a single-serving container, and the entire content of the product must be labeled as one serving. In addition to providing a column within the Nutrition Facts label that lists the quantitative amounts and percent Daily Values per serving, for a product that is packaged and sold individually that contains more than 150 percent and less than 200 percent of the applicable reference amount, the Nutrition Facts label may voluntarily provide, to the left of the column that provides nutrition information per container (*i.e.*, per serving), an additional column that lists the quantitative amounts and percent Daily Values per common household measure that most closely approximates the reference amount.

(7) A label statement regarding a serving shall be the serving size expressed in common household measures as set forth in paragraphs (b)(2) through (b)(6) of this section and shall be followed by the equivalent metric quantity in parenthesis (fluids in milliliters and all other foods in grams) except for single-serving containers.

(i) For a single-serving container, the parenthetical metric quantity, which

will be presented as part of the net weight statement on the principal display panel, is not required except where nutrition information is required on a drained weight basis according to §101.9(b)(9). However, if a manufacturer voluntarily provides the metric quantity on products that can be sold as single servings, then the numerical value provided as part of the serving size declaration must be identical to the metric quantity declaration provided as part of the net quantity of contents statement.

(ii) The gram or milliliter quantity equivalent to the household measure should be rounded to the nearest whole number except for quantities that are less than 5 g (mL). The gram (mL) quantity between 2 and 5 g (mL) should be rounded to the nearest 0.5 g (mL) and the g (mL) quantity less than 2 g (mL) should be expressed in 0.1-g (mL) increments.

(iii) In addition, serving size may be declared in ounce and fluid ounce, in parenthesis, following the metric measure separated by a slash where other common household measures are used as the primary unit for serving size, e.g., 1 slice (28 g/1 oz) for sliced bread. The ounce quantity equivalent to the metric quantity should be expressed in 0.1 oz increments.

(iv) If a manufacturer elects to use abbreviations for units, the following abbreviations shall be used: tbsp for tablespoon, tsp for teaspoon, g for gram, mL for milliliter, oz for ounce, and fl oz for fluid ounce.

(v) For products that only require the addition of water or another ingredient that contains insignificant amounts of nutrients in the amount added and that are prepared in such a way that there are no significant changes to the nutrient profile, the amount of the finished product may be declared in parentheses at the end of the serving size declaration (e.g., ½ cup (120 mL) concentrated soup (makes 1 cup prepared)).

(vi) To promote uniformity in label serving sizes in household measures declared by different manufacturers, FDA has provided a guidance document entitled, ''Guidelines for Determining the Gram Weight of the Household Measure.'' The guidance document can be obtained from the Office of Nutritional Products, Labeling and Dietary Supplements (HFS–800), Center for Food Safety and Applied Nutrition, Food and Drug Administration, 5001 Campus Dr., College Park, MD 20740.

(8) Determination of the number of servings per container shall be based on the serving size of the product determined by following the procedures described in this section.

(i) The number of servings shall be rounded to the nearest whole number except for the number of servings between 2 and 5 servings and random weight products. The number of servings between 2 and 5 servings shall be rounded to the nearest 0.5 serving. Rounding should be indicated by the use of the term *about* (e.g., about 2 servings, about 3.5 servings).

(ii) When the serving size is required to be expressed on a drained solids basis and the number of servings varies because of a natural variation in unit size (e.g., maraschino cherries, pickles), the manufacturer may state the typical number of servings per container (e.g., usually 5 servings).

(iii) For random weight products, manufacturers may declare ''varied'' for the number of servings per container provided the nutrition information is based on the reference amount expressed in the appropriate household measure based on the hierarchy described in paragraph (b)(5) of this section. Random weight products are foods such as cheeses that are sold as random weights that vary in size, such that the net contents for different containers would vary. The manufacturer may provide the typical number of servings in parentheses following the ''varied'' statement.

(iv) For packages containing several individual single-serving containers, each of which is labeled with all required information including nutrition labeling as specified in §101.9 (that is, are labeled appropriately for individual sale as single-serving containers), the number of servings shall be the number of individual packages within the total package.

(v) For packages containing several individually packaged multiserving units, the number of servings shall be determined by multiplying the number

of individual multiserving units in the total package by the number of servings in each individual unit.

(9) The declaration of nutrient and food component content shall be on the basis of food as packaged or purchased with the exception of raw fish covered under § 101.42 (see 101.44), packaged single-ingredient products that consist of fish or game meat as provided for in paragraph (j)(11) of this section, and of foods that are packed or canned in water, brine, or oil but whose liquid packing medium is not customarily consumed (e.g., canned fish, maraschino cherries, pickled fruits, and pickled vegetables). Declaration of nutrient and food component content of raw fish shall follow the provisions in § 101.45. Declaration of the nutrient and food component content of foods that are packed in liquid which is not customarily consumed shall be based on the drained solids.

(10) Another column of figures may be used to declare the nutrient and food component information:

(i) Per 100 g or 100 mL, or per 1 oz or 1 fl oz of the food as packaged or purchased;

(ii) Per one unit if the serving size of a product in discrete units is more than 1 unit.

(iii) Per cup popped for popcorn in a multiserving container.

(11) If a product is promoted on the label, labeling, or advertising for a use that differs in quantity by twofold or greater from the use upon which the reference amount in § 101.12(b) was based (e.g., liquid cream substitutes promoted for use with breakfast cereals), the manufacturer shall provide a second column of nutrition information based on the amount customarily consumed in the promoted use, in addition to the nutrition information per serving derived from the reference amount in § 101.12(b), except that nondiscrete bulk products that are used primarily as ingredients (e.g., flour, sweeteners, shortenings, oils), or traditionally used for multipurposes (e.g., eggs, butter, margarine), and multipurpose baking mixes are exempt from this requirement.

(12)(i) Products that are packaged and sold individually and that contain at least 200 percent and up to and including 300 percent of the applicable reference amount must provide an additional column within the Nutrition Facts label that lists the quantitative amounts and percent Daily Values for the entire package, as well as a column listing the quantitative amounts and percent Daily Values for a serving that is less than the entire package (*i.e.*, the serving size derived from the reference amount). The first column would be based on the serving size for the product and the second column would be based on the entire contents of the package.

(A) This provision does not apply to products that meet the requirements to use the tabular format in paragraph (j)(13)(ii)(A)(*1*) of this section or to products that meet the requirements to use the linear format in paragraph (j)(13)(ii)(A)(*2*) of this section.

(B) This provision does not apply to raw fruits, vegetables, and seafood for which voluntary nutrition labeling is provided in the product labeling or advertising or when claims are made about the product.

(C) This provision does not apply to products that require further preparation and provide an additional column of nutrition information under paragraph (e) of this section, to products that are commonly consumed in combination with another food and provide an additional column of nutrition information under paragraph (e) of this section, to products that provide an additional column of nutrition information for two or more groups for which RDIs are established (*e.g.*, both infants and children less than 4 years of age), to popcorn products that provide an additional column of nutrition information per 1 cup popped popcorn, or to varied-weight products covered under paragraph (b)(8)(iii) of this section.

(ii) When a nutrient content claim or health claim is made on the label of a product that uses a dual column as required in paragraph (b)(2)(i)(D) or (b)(12)(i) of this section, the claim must be followed by a statement that sets forth the basis on which the claim is made, except that the statement is not required for products when the nutrient that is the subject of the claim meets the criteria for the claim based

on the reference amount for the product and the entire container or the unit amount. When a nutrient content claim is made, the statement must express that the claim refers to the amount of the nutrient per serving (*e.g.*, ''good source of calcium per serving'' or ''per X [insert unit]__serving'') or per reference amount (*e.g.*, ''good source of calcium per [insert reference amount (*e.g.*, per 8 ounces)]), as required based on §101.12(g). When a health claim is made, the statement shall be ''A serving of __ounces of this product conforms to such a diet.''

(c) The declaration of nutrition information on the label and in labeling of a food shall contain information about the level of the following nutrients, except for those nutrients whose inclusion, and the declaration of amounts, is voluntary as set forth in this paragraph. No nutrients or food components other than those listed in this paragraph as either mandatory or voluntary may be included within the nutrition label. Except as provided for in paragraphs (f) or (j) of this section, nutrient information shall be presented using the nutrient names specified and in the following order in the formats specified in paragraphs (d) or (e) of this section.

(1) ''Calories, total,'' ''Total calories,'' or ''Calories'': A statement of the caloric content per serving, expressed to the nearest 5-calorie increment up to and including 50 calories, and 10-calorie increment above 50 calories, except that amounts less than 5 calories may be expressed as zero. Energy content per serving may also be expressed in kilojoule units, added in parentheses immediately following the statement of the caloric content.

(i) Caloric content may be calculated by the following methods. Where either specific or general food factors are used, the factors shall be applied to the actual amount (i.e., before rounding) of food components (e.g., fat, carbohydrate, protein, or ingredients with specific food factors) present per serving.

(A) Using specific Atwater factors (*i.e.*, the Atwater method) given in table 13, USDA Handbook No. 74 (slightly revised, 1973),

(B) Using the general factors of 4, 4, and 9 calories per gram for protein, total carbohydrate, and total fat, respectively, as described in USDA Handbook No. 74 (slightly revised, 1973) pp. 9–11;

(C) Using the general factors of 4, 4, and 9 calories per gram for protein, total carbohydrate (less the amount of non-digestible carbohydrates and sugar alcohols), and total fat, respectively, as described in USDA Handbook No. 74 (slightly revised, 1973) pp. 9–11. A general factor of 2 calories per gram for soluble non-digestible carbohydrates shall be used. The general factors for caloric value of sugar alcohols provided in paragraph (c)(1)(i)(F) of this section shall be used;

(D) Using data for specific food factors for particular foods or ingredients approved by the Food and Drug Administration (FDA) and provided in parts 172 or 184 of this chapter, or by other means, as appropriate;

(E) Using bomb calorimetry data subtracting 1.25 calories per gram protein to correct for incomplete digestibility, as described in USDA Handbook No. 74 (slightly revised, 1973) p. 10; or

(F) Using the following general factors for caloric value of sugar alcohols: Isomalt—2.0 calories per gram, lactitol—2.0 calories per gram, xylitol—2.4 calories per gram, maltitol—2.1 calories per gram, sorbitol—2.6 calories per gram, hydrogenated starch hydrolysates—3.0 calories per gram, mannitol—1.6 calories per gram, and erythritol—0 calories per gram.

(ii) ''Calories from saturated fat'' or ''Calories from saturated'' (VOLUNTARY): A statement of the caloric content derived from saturated fat as defined in paragraph (c)(2)(i) of this section in a serving may be declared voluntarily, expressed to the nearest 5-calorie increment, up to and including 50 calories, and the nearest 10-calorie increment above 50 calories, except that amounts less than 5 calories may be expressed as zero. This statement shall be indented under the statement of calories as provided in paragraph (d)(5) of this section.

(2) ''Fat, total'' or ''Total fat'': A statement of the number of grams of total fat in a serving defined as total

lipid fatty acids and expressed as triglycerides where fatty acids are aliphatic carboxylic acids consisting of a chain of alkyl groups and characterized by a terminal carboxyl group. Amounts shall be expressed to the nearest 0.5 (½) gram increment below 5 grams and to the nearest gram increment above 5 grams. If the serving contains less than 0.5 gram, the content shall be expressed as zero.

(i) ''Saturated fat,'' or ''Saturated'': A statement of the number of grams of saturated fat in a serving defined as the sum of all fatty acids containing no double bonds, except that label declaration of saturated fat content information is not required for products that contain less than 0.5 gram of total fat in a serving if no claims are made about fat, fatty acid, or cholesterol content, and if ''calories from saturated fat'' is not declared. Except as provided for in paragraph (f) of this section, if a statement of the saturated fat content is not required and, as a result, not declared, the statement ''Not a significant source of saturated fat'' shall be placed at the bottom of the table of nutrient values. Saturated fat content shall be indented and expressed as grams per serving to the nearest 0.5 gram (½) gram increment below 5 grams and to the nearest gram increment above 5 grams. If the serving contains less than 0.5 gram, the content shall be expressed as zero.

(ii) ''Trans fat'' or ''Trans'': A statement of the number of grams of trans fat in a serving, defined as the sum of all unsaturated fatty acids that contain one or more isolated (*i.e.*, nonconjugated) double bonds in a trans configuration, except that label declaration of trans fat content information is not required for products that contain less than 0.5 gram of total fat in a serving if no claims are made about fat, fatty acid or cholesterol content. The word ''trans'' may be italicized to indicate its Latin origin. Trans fat content shall be indented and expressed as grams per serving to the nearest 0.5 (½)-gram increment below 5 grams and to the nearest gram increment above 5 grams. If the serving contains less than 0.5 gram, the content, when declared, shall be expressed as zero. Except as provided for in paragraph (f) of this section, if a statement of the trans fat content is not required and, as a result, not declared, the statement ''Not a significant source of trans fat'' shall be placed at the bottom of the table of nutrient values.

(iii) ''Polyunsaturated fat'' or ''Polyunsaturated'' (VOLUNTARY): A statement of the number of grams of polyunsaturated fat in a serving defined as cis,cis-methylene-interrupted polyunsaturated fatty acids may be declared voluntarily, except that when monounsaturated fat is declared, or when a claim about fatty acids or cholesterol is made on the label or in labeling of a food other than one that meets the criteria in §101.62(b)(1) for a claim for ''fat free,'' label declaration of polyunsaturated fat is required. Polyunsaturated fat content shall be indented and expressed as grams per serving to the nearest 0.5 (½) gram increment below 5 grams and to the nearest gram increment above 5 grams. If the serving contains less than 0.5 gram, the content shall be expressed as zero.

(iv) ''Monounsaturated fat'' or ''Monounsaturated'' (VOLUNTARY): A statement of the number of grams of monounsaturated fat in a serving defined as cis-monounsaturated fatty acids may be declared voluntarily except that when polyunsaturated fat is declared, or when a claim about fatty acids or cholesterol is made on the label or in labeling of a food other than one that meets the criteria in §101.62(b)(1) for a claim for ''fat free,'' label declaration of monounsaturated fat is required. Monounsaturated fat content shall be indented and expressed as grams per serving to the nearest 0.5 (½) gram increment below 5 grams and to the nearest gram increment above 5 grams. If the serving contains less than 0.5 gram, the content shall be expressed as zero.

(3) ''Cholesterol'': A statement of the cholesterol content in a serving expressed in milligrams to the nearest 5-milligram increment, except that label declaration of cholesterol information is not required for products that contain less than 2 milligrams cholesterol in a serving and make no claim about fat, fatty acids, or cholesterol content,

or such products may state the cholesterol content as zero. Except as provided for in paragraph (f) of this section, if cholesterol content is not required and, as a result, not declared, the statement ''Not a significant source of cholesterol'' shall be placed at the bottom of the table of nutrient values in the same type size. If the food contains 2 to 5 milligrams of cholesterol per serving, the content may be stated as ''less than 5 milligrams.''

(4) ''Sodium'': A statement of the number of milligrams of sodium in a specified serving of food expressed as zero when the serving contains less than 5 milligrams of sodium, to the nearest 5-milligram increment when the serving contains 5 to 140 milligrams of sodium, and to the nearest 10-milligram increment when the serving contains greater than 140 milligrams.

(5) ''Fluoride'' (VOLUNTARY): A statement of the number of milligrams of fluoride in a specified serving of food may be declared voluntarily, except that when a claim is made about fluoride content, label declaration shall be required. Fluoride content shall be expressed as zero when the serving contains less than 0.1 milligrams of fluoride, to the nearest 0.1-milligram increment when the serving contains less than or equal to 0.8 milligrams of fluoride, and the nearest 0.2 milligram-increment when a serving contains more than 0.8 milligrams of fluoride. Bottled water that bears a statement about added fluoride, as permitted by §101.13(q)(8), must bear nutrition labeling that complies with requirements for the simplified format in paragraph (f) of this section.

(6) ''Carbohydrate, total'' or ''Total carbohydrate'': A statement of the number of grams of total carbohydrate in a serving expressed to the nearest gram, except that if a serving contains less than 1 gram, the statement ''Contains less than 1 gram'' or ''less than 1 gram'' may be used as an alternative, or if the serving contains less than 0.5 gram, the content may be expressed as zero. Total carbohydrate content shall be calculated by subtraction of the sum of the crude protein, total fat, moisture, and ash from the total weight of the food. This calculation method is described in A. L. Merrill and B. K. Watt, ''Energy Value of Foods—Basis and Derivation,'' USDA Handbook 74 (slightly revised 1973) pp. 2 and 3, which is incorporated by reference in accordance with 5 U.S.C. 552(a) and 1 CFR part 51 (the availability of this incorporation by reference is given in paragraph (c)(1)(i)(A) of this section).

(i) ''Dietary fiber'': A statement of the number of grams of total dietary fiber in a serving, indented and expressed to the nearest gram, except that if a serving contains less than 1 gram, declaration of dietary fiber is not required or, alternatively, the statement ''Contains less than 1 gram'' or ''less than 1 gram'' may be used, and if the serving contains less than 0.5 gram, the content may be expressed as zero. Dietary fiber is defined as non-digestible soluble and insoluble carbohydrates (with 3 or more monomeric units), and lignin that are intrinsic and intact in plants; isolated or synthetic non-digestible carbohydrates (with 3 or more monomeric units) determined by FDA to have physiological effects that are beneficial to human health. Except as provided for in paragraph (f) of this section, if dietary fiber content is not required, and as a result not declared, the statement ''Not a significant source of dietary fiber'' shall be placed at the bottom of the table of nutrient values in the same type size. The following isolated or synthetic nondigestible carbohydrate(s) have been determined by FDA to have physiological effects that are beneficial to human health and, therefore, shall be included in the calculation of the amount of dietary fiber: [beta]-glucan soluble fiber (as described in §101.81(c)(2)(ii)(A)), psyllium husk (as described in §101.81(c)(2)(ii)(B)(*1*)), cellulose, guar gum, pectin, locust bean gum, and hydroxypropylmethylcellulose. The manufacturer must make and keep records in accordance with paragraphs (g)(10) and (11) of this section to verify the declared amount of dietary fiber in the label and labeling of food when a mixture of dietary fiber, and added nondigestible carbohydrate(s) that does not meet the definition of dietary fiber, is present in the food.

(A) ''Soluble fiber'' (VOLUNTARY): A statement of the number of grams of soluble dietary fiber in a serving may

be declared voluntarily except that when a claim is made on the label or in labeling about soluble fiber, label declaration shall be required. Soluble fiber must meet the definition of dietary fiber in this paragraph (c)(6)(i). The manufacturer must make and keep records in accordance with paragraphs (g)(10) and (11) of this section to verify the declared amount of soluble fiber in the label and labeling of food when a mixture of soluble fiber and added nondigestible carbohydrate(s) that does not meet the definition of dietary fiber is present in the food. Soluble fiber content shall be indented under dietary fiber and expressed to the nearest gram, except that if a serving contains less than 1 gram, the statement ''Contains less than 1 gram'' or ''less than 1 gram'' may be used as an alternative, and if the serving contains less than 0.5 gram, the content may be expressed as zero.''

(B) ''Insoluble fiber'' (VOLUNTARY): A statement of the number of grams of insoluble dietary fiber in a serving may be declared voluntarily except that when a claim is made on the label or in labeling about insoluble fiber, label declaration shall be required. Insoluble fiber must meet the definition of dietary fiber in this paragraph (c)(6)(i). The manufacturer must make and keep records in accordance with paragraphs (g)(10) and (11) of this section to verify the declared amount of insoluble fiber in the label and labeling of food when a mixture of insoluble and added non-digestible carbohydrate(s) that does not meet the definition of dietary fiber is present in the food. Insoluble fiber content shall be indented under dietary fiber and expressed to the nearest gram, except that if a serving contains less than 1 gram, the statement ''Contains less than 1 gram'' or ''less than 1 gram'' may be used as an alternative, and if the serving contains less than 0.5 gram, the content may be expressed as zero.

(ii) ''Total Sugars'': A statement of the number of grams of sugars in a serving, except that the label declaration of sugars content is not required for products that contain less than 1 gram of sugars in a serving if no claims are made about sweeteners, sugars, or sugar alcohol content. Except as provided for in paragraph (f) of this section, if a statement of the total sugars content is not required and, as a result, not declared, the statement ''Not a significant source of total sugars'' shall be placed at the bottom of the table of nutrient values in the same type size. Total sugars shall be defined as the sum of all free mono- and disaccharides (such as glucose, fructose, lactose, and sucrose). Total sugars content shall be indented and expressed to the nearest gram, except that if a serving contains less than 1 gram, the statement ''Contains less than 1 gram'' or ''less than 1 gram'' may be used as an alternative, and if the serving contains less than 0.5 gram, the content may be expressed as zero.

(iii) ''Added Sugars'': A statement of the number of grams of added sugars in a serving, except that label declaration of added sugars content is not required for products that contain less than 1 gram of added sugars in a serving if no claims are made about sweeteners, sugars, added sugars, or sugar alcohol content. Except as provided for in paragraph (f) of this section, if a statement of the added sugars content is not required and, as a result, not declared, the statement ''Not a significant source of added sugars'' shall be placed at the bottom of the table of nutrient values in the same type size. Added sugars are either added during the processing of foods, or are packaged as such, and include sugars (free, mono and disaccharides), sugars from syrups and honey, and sugars from concentrated fruit or vegetable juices that are in excess of what would be expected from the same volume of 100 percent fruit or vegetable juice of the same type, except that fruit or vegetable juice concentrated from 100 percent juices sold to consumers, fruit or vegetable juice concentrates used towards the total juice percentage label declaration under § 101.30 or for Brix standardization under § 102.33(g)(2) of this chapter, fruit juice concentrates which are used to formulate the fruit component of jellies, jams, or preserves in accordance with the standard of identities set forth in §§ 150.140 and 150.160 of this chapter, or the fruit component of fruit spreads shall not be labeled as added sugars. Added sugars content

shall be indented under Total Sugars and shall be prefaced with the word ''Includes'' followed by the amount (in grams) ''Added Sugars'' (''Includes 'X' g Added Sugars''). It shall be expressed to the nearest gram, except that if a serving contains less than 1 gram, the statement ''Contains less than 1 gram'' or ''less than 1 gram'' may be used as an alternative, and if the serving contains less than 0.5 gram, the content may be expressed as zero. When a mixture of naturally occurring and added sugars is present in the food, and for specific foods containing added sugars, alone or in combination with naturally occurring sugars, where the added sugars are subject to fermentation and/or non-enzymatic browning, the manufacturer must make and keep records in accordance with paragraphs (g)(10) and (11) of this section to verify the declared amount of added sugars in the label and labeling of food.

(iv) ''Sugar alcohol'' (VOLUNTARY): A statement of the number of grams of sugar alcohols in a serving may be declared voluntarily on the label, except that when a claim is made on the label or in labeling about sugar alcohol or total sugars, or added sugars when sugar alcohols are present in the food, sugar alcohol content shall be declared. For nutrition labeling purposes, sugar alcohols are defined as the sum of saccharide derivatives in which a hydroxyl group replaces a ketone or aldehyde group and whose use in the food is listed by FDA (*e.g.*, mannitol or xylitol) or is generally recognized as safe (*e.g.*, sorbitol). In lieu of the term ''sugar alcohol,'' the name of the specific sugar alcohol (*e.g.*, ''xylitol'') present in the food may be used in the nutrition label provided that only one sugar alcohol is present in the food. Sugar alcohol content shall be indented and expressed to the nearest gram, except that if a serving contains less than 1 gram, the statement ''Contains less than 1 gram'' or ''less than 1 gram'' may be used as an alternative, and if the serving contains less than 0.5 gram, the content may be expressed as zero.

(7) ''Protein'': A statement of the number of grams of protein in a serving, expressed to the nearest gram, except that if a serving contains less than 1 gram, the statement ''Contains less than 1 gram'' or ''less than 1 gram'' may be used as an alternative, and if the serving contains less than 0.5 gram, the content may be expressed as zero. When the protein in foods represented or purported to be for adults and children 4 or more years of age has a protein quality value that is a protein digestibility-corrected amino acid score of less than 20 expressed as a percent, or when the protein in a food represented or purported to be for children greater than 1 but less than 4 years of age has a protein quality value that is a protein digestibility-corrected amino acid score of less than 40 expressed as a percent, either of the following shall be placed adjacent to the declaration of protein content by weight: The statement ''not a significant source of protein,'' or a listing aligned under the column headed ''Percent Daily Value'' of the corrected amount of protein per serving, as determined in paragraph (c)(7)(ii) of this section, calculated as a percentage of the Daily Reference Value (DRV) or Reference Daily Intake (RDI), as appropriate, for protein and expressed as a Percent of Daily Value. When the protein quality in a food as measured by the Protein Efficiency Ratio (PER) is less than 40 percent of the reference standard (casein) for a food represented or purported to be specifically for infants through 12 months, the statement ''not a significant source of protein'' shall be placed adjacent to the declaration of protein content. Protein content may be calculated on the basis of the factor 6.25 times the nitrogen content of the food as determined by the appropriate method of analysis as given in the ''Official Methods of Analysis of the AOAC International,'' except when official AOAC procedures described in this paragraph (c)(7) require a specific factor other than 6.25, that specific factor shall be used.

(i) A statement of the corrected amount of protein per serving, as determined in paragraph (c)(7)(ii) of this section, calculated as a percentage of the RDI or DRV for protein, as appropriate, and expressed as Percent of Daily Value, may be placed on the label, except that such a statement shall be given if a protein claim is made for the product, or if the product

is represented or purported to be specifically for infants through 12 months or children 1 through 3 years of age. When such a declaration is provided, it should be placed on the label adjacent to the statement of grams of protein and aligned under the column headed ''Percent Daily Value,'' and expressed to the nearest whole percent. However, the percentage of the RDI for protein shall not be declared if the food is represented or purported to be specifically for infants through 12 months and the protein quality value is less than 40 percent of the reference standard.

(ii) The ''corrected amount of protein (gram) per serving'' for foods represented or purported for adults and children 1 or more years of age is equal to the actual amount of protein (gram) per serving multiplied by the amino acid score corrected for protein digestibility. If the corrected score is above 1.00, then it shall be set at 1.00. The protein digestibility-corrected amino acid score shall be determined by methods given in sections 5.4.1, 7.2.1, and 8.00 in ''Report of the Joint FAO/WHO Expert Consultation on Protein Quality Evaluation,'' except that when official AOAC procedures described in paragraph (c)(7) of this section require a specific factor other than 6.25, that specific factor shall be used. For foods represented or purported to be specifically for infants through 12 months, the corrected amount of protein (grams) per serving is equal to the actual amount of protein (grams) per serving multiplied by the relative protein quality value. The relative protein quality value shall be determined by dividing the subject food protein PER value by the PER value for casein. If the relative protein value is above 1.00, it shall be set at 1.00.

(iii) For the purpose of labeling with a percent of the DRV or RDI, a value of 50 grams of protein shall be the DRV for adults and children 4 or more years of age, a value of 11 grams of protein shall be the RDI for infants through 12 months, a value of 13 grams shall be the DRV for children 1 through 3 years of age, and a value of 71 grams of protein shall be the RDI for pregnant women and lactating women.

(8) ''Vitamins and minerals'': The requirements related to including a statement of the amount per serving of vitamins and minerals are described in this paragraph (c)(8).

(i) For purposes of declaration of percent of Daily Value as provided for in paragraphs (d), (e), and (f) of this section, foods represented or purported to be specifically for infants through 12 months, children 1 through 3 years, pregnant women, and lactating women shall use the RDIs that are specified for the intended group. For foods represented or purported to be specifically for both infants through 12 months of age and children 1 through 3 years of age, the percent of Daily Value shall be presented by separate declarations according to paragraph (e) of this section based on the RDI values for infants through 12 months of age and children 1 through 3 years of age. When such dual declaration is used on any label, it shall be included in all labeling, and equal prominence shall be given to both values in all such labeling. The percent Daily Value based on the RDI values for pregnant women and lactating women shall be declared on food represented or purported to be specifically for pregnant women and lactating women. All other foods shall use the RDI for adults and children 4 or more years of age.

(ii) The declaration of vitamins and minerals as a quantitative amount by weight and percent of the RDI shall include vitamin D, calcium, iron, and potassium in that order, for infants through 12 months, children 1 through 3 years of age, pregnant women, lactating women, and adults and children 4 or more years of age, except quantitative weights for these vitamins and minerals are not required for labels described in paragraph (j)(13) of this section. The declaration of folic acid shall be included as a quantitative amount by weight when added as a nutrient supplement or a claim is made about the nutrient. The declaration of vitamins and minerals in a food, as a quantitative amount by weight and percent of the RDI, may include any of the other vitamins and minerals listed in paragraph (c)(8)(iv) of this section. The declaration of vitamins and minerals shall include any of the other vitamins and minerals listed in paragraph (c)(8)(iv) of this section as a statement

of the amount per serving of the vitamins and minerals as described in this paragraph (c)(8)(ii), calculated as a percent of the RDI and expressed as a percent of the Daily Value, when they are added as a nutrient supplement, or when a claim is made about them, unless otherwise stated as quantitative amount by weight and percent of the Daily Value. Other vitamins and minerals need not be declared if neither the nutrient nor the component is otherwise referred to on the label or the labeling or advertising and the vitamins and minerals are:

(A) Required or permitted in a standardized food (e.g., thiamin, riboflavin, and niacin in enriched flour) and that standardized food is included as an ingredient (i.e., component) in another food; or

(B) Included in a food solely for technological purposes and declared only in the ingredient statement. The declaration may also include any of the other vitamins and minerals listed in paragraph (c)(8)(iv) of this section when they are naturally occurring in the food. The additional vitamins and minerals shall be listed in the order established in paragraph (c)(8)(iv) of this section.

(iii) The percentages for vitamins and minerals shall be expressed to the nearest 2-percent increment up to and including the 10-percent level, the nearest 5-percent increment above 10 percent and up to and including the 50-percent level, and the nearest 10-percent increment above the 50-percent level. Quantitative amounts and percentages of vitamins and minerals present at less than 2 percent of the RDI are not required to be declared in nutrition labeling but may be declared by a zero or by the use of an asterisk (or other symbol) that refers to another asterisk (or symbol) that is placed at the bottom of the table and that is followed by the statement ''Contains less than 2 percent of the Daily Value of this (these) nutrient (nutrients)'' or ''Contains <2 percent of the Daily Value of this (these) nutrient (nutrients).'' Alternatively, except as provided for in paragraph (f) of this section, if vitamin D, calcium, iron, or potassium is present in amounts less than 2 percent of the RDI, label declaration of the nutrient(s) is not required if the statement ''Not a significant source of—(listing the vitamins or minerals omitted)'' is placed at the bottom of the table of nutrient values. Either statement shall be in the same type size as nutrients that are indented. The quantitative amounts of vitamins and minerals, excluding sodium, shall be the amount of the vitamin or mineral included in one serving of the product, using the units of measurement and the levels of significance given in paragraph (c)(8)(iv) of this section, except that zeros following decimal points may be dropped, and additional levels of significance may be used when the number of decimal places indicated is not sufficient to express lower amounts (*e.g.*, the RDI for zinc is given in whole milligrams, but the quantitative amount may be declared in tenths of a milligram).

(iv) The following RDIs, nomenclature, and units of measure are established for the following vitamins and minerals which are essential in human nutrition:

		RDI			
Nutrient	Unit of measure	Adults and children ≥ 4 years	Infants [1] through 12 months	Children 1 through 3 years	Pregnant women and lactating women
Vitamin D	Micrograms (mcg) [2]	20	10	15	15
Calcium	Milligrams (mg)	1,300	260	700	1,300
Iron	Milligrams (mg)	18	11	7	27
Potassium	Milligrams (mg)	4,700	700	3,000	5,100
Vitamin A	Micrograms RAE [3] (mcg)	900	500	300	1,300
Vitamin C	Milligrams (mg)	90	50	15	120
Vitamin E	Milligrams (mg) [4]	15	5	6	19
Vitamin K	Micrograms (mcg)	120	2.5	30	90
Thiamin	Milligrams (mg)	1.2	0.3	0.5	1.4
Riboflavin	Milligrams (mg)	1.3	0.4	0.5	1.6
Niacin	Milligrams NE [5] (mg)	16	4	6	18
Vitamin B_6	Milligrams (mg)	1.7	0.3	0.5	2.0
Folate [6]	Micrograms DFE [7] (mcg)	400	80	150	600

Nutrient	Unit of measure	RDI			
		Adults and children ≥ 4 years	Infants [1] through 12 months	Children 1 through 3 years	Pregnant women and lactating women
Vitamin B_{12}	Micrograms (mcg)	2.4	0.5	0.9	2.8
Biotin	Micrograms (mcg)	30	6	8	35
Pantothenic acid	Milligrams (mg)	5	1.8	2	7
Phosphorus	Milligrams (mg)	1,250	275	460	1,250
Iodine	Micrograms (mcg)	150	130	90	290
Magnesium	Milligrams (mg)	420	75	80	400
Zinc	Milligrams (mg)	11	3	3	13
Selenium	Micrograms (mcg)	55	20	20	70
Copper	Milligrams (mg)	0.9	0.2	0.3	1.3
Manganese	Milligrams (mg)	2.3	0.6	1.2	2.6
Chromium	Micrograms (mcg)	35	5.5	11	45
Molybdenum	Micrograms (mcg)	45	3	17	50
Chloride	Milligrams (mg)	2,300	570	1,500	2,300
Choline	Milligrams (mg)	550	150	200	550
Protein	Grams (g)	N/A	11	N/A	[8] 71

[1] RDIs are based on dietary reference intake recommendations for infants through 12 months of age.
[2] The amount of vitamin D may, but is not required to, be expressed in international units (IU), in addition to the mandatory declaration in mcg. Any declaration of the amount of vitamin D in IU must appear in parentheses after the declaration of the amount of vitamin D in mcg.
[3] RAE = Retinol activity equivalents; 1 microgram RAE = 1 microgram retinol, 2 microgram supplemental β-carotene, 12 micrograms dietary β-carotene, or 24 micrograms dietary α-carotene, or dietary 24 micrograms dietary β-cryptoxanthin.
[4] 1 mg α-tocopherol (label claim) = 1 mg α-tocopherol = 1 mg RRR- α-tocopherol = 2 mg *all rac*-α-tocopherol.
[5] NE = Niacin equivalents, 1 mg NE = 1 mg niacin = 60 milligrams tryptophan.
[6] ''Folate'' and ''Folic Acid'' must be used for purposes of declaration in the labeling of conventional foods and dietary supplements. The declaration for folate must be in mcg DFE (when expressed as a quantitative amount by weight in a conventional food or a dietary supplement), and percent DV based on folate in mcg DFE. Folate may be expressed as a percent DV in conventional foods. When folic acid is added or when a claim is made about the nutrient, folic acid must be declared in parentheses, as mcg of folic acid.
[7] DFE = Dietary Folate Equivalents; 1 DFE = 1 mcg naturally occurring folate = 0.6 mcg folic acid.
[8] Based on the reference caloric intake of 2,000 calories for adults and children aged 4 years and older, and for pregnant women and lactating women.

(v) The following synonyms may be added in parentheses immediately following the name of the nutrient or dietary component:

Calories—Energy
Vitamin C—Ascorbic acid
Thiamin—Vitamin B_1
Riboflavin—Vitamin B_2

(vi) A statement of the percent of vitamin A that is present as *beta*-carotene may be declared voluntarily. When the vitamins and minerals are listed in a single column, the statement shall be indented under the information on vitamin A. When vitamins and minerals are arrayed horizontally, the statement of percent shall be presented in parenthesis following the declaration of vitamin A and the percent DV of vitamin A in the food (e.g., ''Percent Daily Value: Vitamin A 50 (90 percent as *beta*-carotene)''). When declared, the percentages shall be expressed in the same increments as are provided for vitamins and minerals in paragraph (c)(8)(iii) of this section.

(vii) When the amount of folate is declared in the labeling of a conventional food or a dietary supplement, the nutrient name ''folate'' shall be listed for products containing folate (natural folate, and/or synthetic folate as a component of dietary supplement, such as calcium salt of L–5-MTHF), folic acid, or a mixture of folate and folic acid. The name of the synthetic form of the nutrient ''folic acid'', when added or a claim is made about the nutrient, shall be included in parentheses after this declaration with the amount of folic acid. The declaration must be folate in mcg DFE (when expressed as a quantitative amount by weight in a conventional food or a dietary supplement) and the percent DV based on folate in mcg DFE, or for conventional food, may be expressed as folate and the percent DV based on folate in mcg DFE. When declared, folic acid must be in parentheses, mcg of folic acid as shown in paragraph (d)(12) of this section in the display that illustrates voluntary declaration of nutrition information.

(9) The following DRVs, nomenclature, and units of measure are established for the following food components:

Food component	Unit of measure	Adults and children ≥4 years	Infants through 12 months	Children 1 through 3 years	Pregnant women and lactating women
Fat	Grams (g)	[1] 78	30	[2] 39	[1] 78
Saturated fat	Grams (g)	[1] 20	N/A	[2] 10	[1] 20
Cholesterol	Milligrams (mg)	300	N/A	300	300
Total carbohydrate	Grams (g)	[1] 275	95	[2] 150	[1] 275
Sodium	Milligrams (mg)	2,300	N/A	1,500	2,300
Dietary Fiber	Grams (g)	[1] 28	N/A	[2] 14	[1] 28
Protein	Grams (g)	[1] 50	N/A	[2] 13	N/A
Added Sugars	Grams (g)	[1] 50	N/A	[2] 25	[1] 50

[1] Based on the reference caloric intake of 2,000 calories for adults and children aged 4 years and older, and for pregnant women and lactating women

[2] Based on the reference caloric intake of 1,000 calories for children 1 through 3 years of age.

(d)(1) Nutrient information specified in paragraph (c) of this section shall be presented on foods in the following format, as shown in paragraph (d)(12) of this section, except on foods where the tabular display is permitted as provided for in paragraph (d)(11) of this section, on which dual columns of nutrition information are declared as provided for in paragraph (e) of this section, on those food products on which the simplified format is required to be used as provided for in paragraph (f) of this section, on foods for infants through 12 months of age and children 1 through 3 years of age as provided for in paragraph (j)(5) of this section, and on foods in small or intermediate-sized packages as provided for in paragraph (j)(13) of this section. In the interest of uniformity of presentation, FDA strongly recommends that the nutrition information be presented using the graphic specifications set forth in appendix B to part 101.

(i) The nutrition information shall be set off in a box by use of hairlines and shall be all black or one color type, printed on a white or other neutral contrasting background whenever practical.

(ii) All information within the nutrition label shall utilize:

(A) Except as provided for in paragraph (c)(2)(ii) of this section, a single easy-to-read type style,

(B) Upper and lower case letters,

(C) At least one point leading (i.e., space between two lines of text) except that at least four points leading shall be utilized for the information required by paragraphs (d)(7) and (d)(8) of this section as shown in paragraph (d)(12), and

(D) Letters should never touch.

(iii) Information required in paragraphs (d)(7) and (8) of this section shall be in type size no smaller than 8 point. Information required in paragraph (d)(5) of this section for the ''Calories'' declaration shall be highlighted in bold or extra bold and shall be in a type size no smaller than 16 point except the type size for this information required in the tabular displays as shown in paragraphs (d)(11), (e)(6)(ii), and (j)(13)(ii)(A)(*1*) of this section and the linear display for small packages as shown in paragraph (j)(13)(ii)(A)(*2*) of this section shall be in a type size no smaller than 10 point. The numeric amount for the information required in paragraph (d)(5) of this section shall also be highlighted in bold or extra bold type and shall be in a type size no smaller than 22 point, except the type size for this information required for the tabular display for small packages as shown in paragraph (j)(13)(ii)(A)(*1*) of this section, and for the linear display for small packages as shown in paragraph (j)(13)(ii)(A)(*2*) of this section no smaller than 14 point. The information required in paragraphs (d)(4), (6), and (9) of this section shall be in a type size no smaller than 6 point. When provided, the information described in paragraph (d)(10) of this section shall be in a type size no smaller than 6 point.

(iv) The headings required by paragraphs (d)(2), (d)(3)(ii), (d)(4), and (d)(6) of this section (*i.e.*, ''Nutrition Facts,'' ''Serving size,'' ''Amount per serving,''

and ''% Daily Value*''), the names of all nutrients that are not indented according to requirements of paragraph (c) of this section (*i.e.*, ''Calories,'' ''Total Fat,'' ''Cholesterol,'' ''Sodium,'' ''Total Carbohydrate'' and ''Protein''), and the percentage amounts required by paragraph (d)(7)(ii) of this section shall be highlighted in bold or extra bold type or other highlighting (reverse printing is not permitted as a form of highlighting) that prominently distinguishes it from other information. No other information shall be highlighted.

(v) A hairline rule that is centered between the lines of text shall separate ''Nutrition Facts'' from the servings per container statement required in paragraph (d)(3)(i) of this section and shall separate each nutrient and its corresponding percent Daily Value required in paragraphs (d)(7)(i) and (ii) of this section from the nutrient and percent Daily Value above and below it, as shown in paragraph (d)(12) of this section and in Appendix B to Part 101.

(2) The information shall be presented under the identifying heading of ''Nutrition Facts'' which shall be set in a type size no smaller than all other print size in the nutrition label except for the numerical information for ''Calories'' required in paragraph (d)(5) of this section, and except for labels presented according to the format provided for in paragraphs (d)(11), (d)(13)(ii), (e)(6)(ii), (j)(13)(ii)(A)(*1*), and (j)(13)(ii)(A)(*2*) of this section, unless impractical, shall be set the full width of the information provided under paragraph (d)(7) of this section, as shown in paragraph (d)(12) of this section.

(3) Information on servings per container and serving size shall immediately follow the heading as shown in paragraph (d)(12) of this section. Such information shall include:

(i) ''____ servings per container'': The number of servings per container, except that this statement is not required on single serving containers as defined in paragraph (b)(6) of this section or on other food containers when this information is stated in the net quantity of contents declaration. The information required in this paragraph shall be located immediately after the ''Nutrition Facts'' heading and shall be in a type size no smaller than 10 point, except the type size for this information shall be no smaller than 9 point in the tabular display for small packages as shown in paragraph (j)(13)(ii)(A)(*1*) of this section and the linear display for small packages as shown in paragraph (j)(13)(ii)(A)(*2*) of this section. For the linear display for small packages as shown in paragraph (j)(13)(ii)(A)(*2*) of this section, the actual number of servings may be listed after the servings per container declaration.

(ii) ''Serving size'': A statement of the serving size as specified in paragraph (b)(7) of this section which shall immediately follow the ''___servings per container'' declaration. The information required in this paragraph shall be highlighted in bold or extra bold and be in a type size no smaller than 10 point, except the type size shall be no smaller than 9 point for this information in the tabular displays as shown in paragraphs (d)(11) and (e)(6)(ii) of this section, the tabular display for small packages as shown in paragraph (j)(13)(ii)(A)(*1*) of this section, and the linear display for small packages as shown in paragraph (j)(13)(ii)(A)(*2*) of this section. The serving size amount must be right justified if adequate space is available. If the ''Serving size'' declaration does not fit in the allocated space a type size of no smaller than 8 point may be used on packages of any size.

(4) A subheading ''Amount per serving'' shall be separated from the serving size information by a bar as shown in paragraph (d)(12) of this section, except this information is not required for the dual column formats shown in paragraphs (e)(5), (e)(6)(i), and (e)(6)(ii) of this section.

(5) Information on calories shall immediately follow the subheading ''Amount per serving'' and shall be declared in one line. If ''Calories from saturated fat'' is declared, it shall be indented under ''Calories'' and shall be in a type size no smaller than 8 point.

(6) The column heading ''% Daily Value,'' followed by an asterisk (e.g., ''% Daily Value*''), shall be separated from information on calories by a bar as shown in paragraph (d)(12) of this section. The position of this column

heading shall allow for a list of nutrient names and amounts as described in paragraph (d)(7) of this section to be to the left of, and below, this column heading. The column headings ''Percent Daily Value,'' ''Percent DV,'' or ''% DV'' may be substituted for ''% Daily Value.''

(7) Except as provided for in paragraph (j)(13)(ii)(A)(*2*) of this section, nutrient information for both mandatory and any voluntary nutrients listed in paragraph (c) of this section that are to be declared in the nutrition label, except for folic acid in conventional food and voluntarily declared vitamins and minerals expressed as a statement of the amount per serving calculated as a percent of the RDI and expressed as a percent Daily Value, shall be declared as follows:

(i) The name of each nutrient, as specified in paragraph (c) of this section, shall be given in a column and followed immediately by the quantitative amount by weight for that nutrient appended with a ''g'' for grams, ''mg'' for milligrams, or ''mcg'' for micrograms as shown in paragraph (d)(12) of this section. The symbol ''<'' may be used in place of ''less than.''

(ii) A listing of the percent of the DRV as established in paragraphs (c)(7)(iii) and (c)(9) of this section shall be given in a column aligned under the heading ''% Daily Value'' established in paragraph (d)(6) of this section with the percent expressed to the nearest whole percent for each nutrient declared in the column described in paragraph (d)(7)(i) of this section for which a DRV has been established, except that the percent for protein may be omitted as provided in paragraph (c)(7) of this section. The percent shall be calculated by dividing either the amount declared on the label for each nutrient or the actual amount of each nutrient (i.e., before rounding) by the DRV for the nutrient, except that the percent for protein shall be calculated as specified in paragraph (c)(7)(ii) of this section. The numerical value shall be followed by the symbol for percent (i.e., %).

(8) Nutrient information for vitamins and minerals (except sodium) shall be separated from information on other nutrients by a bar and may be arrayed vertically as shown in paragraph (d)(12) of this section (*e.g.*, Vitamin D 2 mcg 10%, Calcium 260 mg 20%, Iron 8 mg 45%, Potassium 235 mg 6%) or may be listed horizontally. When listed horizontally in two columns, vitamin D and calcium should be listed on the first line and iron and potassium should be listed on the second line, as shown in paragraph (d)(12) of this section in the side-by-side display. When more than four vitamins and minerals are declared voluntarily as shown in paragraph (d)(12) of this section in the label which illustrates the mandatory plus voluntary provisions of paragraph (d) of this section, they may be declared vertically with percentages listed under the column headed ''% Daily Value.''

(9) A footnote, preceded by an asterisk, shall be placed beneath the list of vitamins and minerals and shall be separated from the list by a bar, except that the footnote may be omitted from foods that can use the terms ''calorie free,'' ''free of calories,'' ''without calories,'' ''trivial source of calories,'' ''negligible source of calories,'' or ''dietary insignificant source of calories'' on the label or in the labeling of foods as defined in §101.60(b). The first sentence of the footnote: ''The % Daily Value tells you how much a nutrient in a serving of food contributes to a daily diet'' may be used on foods that can use the terms ''calorie free,'' ''free of calories,'' ''without calories,'' ''trivial source of calories,'' ''negligible source of calories,'' or ''dietary insignificant source of calories'' on the label or in the labeling of foods as defined in §101.60(b). The footnote shall state: ''*The % Daily Value tells you how much a nutrient in a serving of food contributes to a daily diet. 2,000 calories a day is used for general nutrition advice.'' If the food product is represented or purported to be for children 1 through 3 years of age, the second sentence of the footnote shall substitute ''1,000 calories'' for ''2,000 calories.''

(10) Caloric conversion information on a per gram basis for fat, carbohydrate, and protein may be presented beneath the information required in

paragraph (d)(9) of this section, separated from that information by a hairline. This information may be presented horizontally as shown in paragraph (d)(12) of this section (i.e., ''Calories per gram: fat 9, carbohydrate 4, protein 4'') or vertically in columns.

(11)(i) If the space beneath the information on vitamins and minerals is not adequate to accommodate the information required in paragraph (d)(9) of this section, the information required in paragraph (d)(9) may be moved to the right of the column required in paragraph (d)(7)(ii) of this section and set off by a line that distinguishes it and sets it apart from the percent Daily Value information. The caloric conversion information provided for in paragraph (d)(10) of this section may be presented beneath either side or along the full length of the nutrition label.

(ii) If the space beneath the mandatory declaration of potassium is not adequate to accommodate any remaining vitamins and minerals to be declared or the information required in paragraph (d)(9) of this section, the remaining information may be moved to the right and set off by a line that distinguishes it and sets it apart from the nutrients and the percent DV information given to the left. The caloric conversion information provided for in paragraph (d)(10) of this section may be presented beneath either side or along the full length of the nutrition label.

(iii) If there is not sufficient continuous vertical space (*i.e.*, approximately 3 in) to accommodate the required components of the nutrition label up to and including the mandatory declaration of potassium, the nutrition label may be presented in a tabular display as shown in the following sample label.

Tabular Format

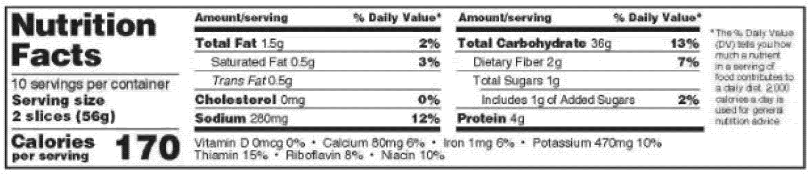

Nutrition Facts	Amount/serving	% Daily Value*	Amount/serving	% Daily Value*
10 servings per container	**Total Fat** 1.5g	2%	**Total Carbohydrate** 36g	13%
Serving size	Saturated Fat 0.5g	3%	Dietary Fiber 2g	7%
2 slices (56g)	*Trans Fat* 0.5g		Total Sugars 1g	
Calories per serving 170	**Cholesterol** 0mg	0%	Includes 1g of Added Sugars	2%
	Sodium 280mg	12%	**Protein** 4g	

Vitamin D 0mcg 0% • Calcium 80mg 6% • Iron 1mg 6% • Potassium 470mg 10%
Thiamin 15% • Riboflavin 8% • Niacin 10%

*The % Daily Value (DV) tells you how much a nutrient in a serving of food contributes to a daily diet. 2,000 calories a day is used for general nutrition advice.

(12) The following sample labels illustrate the mandatory provisions and mandatory plus voluntary provisions of paragraph (d) of this section and the side-by-side display.

Standard Vertical

Nutrition Facts

8 servings per container

Serving size **2/3 cup (55g)**

Amount per serving

Calories **230**

	% Daily Value*
Total Fat 8g	**10%**
Saturated Fat 1g	**5%**
Trans Fat 0g	
Cholesterol 0mg	**0%**
Sodium 160mg	**7%**
Total Carbohydrate 37g	**13%**
Dietary Fiber 4g	**14%**
Total Sugars 12g	
Includes 10g Added Sugars	**20%**
Protein 3g	
Vitamin D 2mcg	10%
Calcium 260mg	20%
Iron 8mg	45%
Potassium 235mg	6%

* The % Daily Value (DV) tells you how much a nutrient in a serving of food contributes to a daily diet. 2,000 calories a day is used for general nutrition advice.

Standard Vertical
(w/ Voluntary)

Nutrition Facts

17 servings per container
Serving size **3/4 cup (28g)**

Amount per serving
Calories **140**

	% Daily Value*
Total Fat 1.5g	**2%**
Saturated Fat 0g	**0%**
Trans Fat 0g	
Polyunsaturated Fat 0.5g	
Monounsaturated Fat 0.5g	
Cholesterol 0mg	**0%**
Sodium 160mg	**7%**
Total Carbohydrate 22g	**8%**
Dietary Fiber 2g	**7%**
Soluble Fiber <1g	
Insoluble Fiber 1g	
Total Sugars 9g	
Includes 8g Added Sugars	**16%**
Protein 9g	**18%**
Vitamin D 2mcg (80 IU)	10%
Calcium 130mg	10%
Iron 4.5mg	25%
Potassium 115mg	2%
Vitamin A 90mcg	10%
Vitamin C 9mg	10%
Thiamin 0.3mg	25%
Riboflavin 0.3mg	25%
Niacin 4mg	25%
Vitamin B_6 0.4mg	25%
Folate 200mcg DFE (120mcg folic acid)	50%
Vitamin B_{12} 0.6mcg	25%
Phosphorus 100mg	8%
Magnesium 25mg	6%
Zinc 3mg	25%

* The % Daily Value (DV) tells you how much a nutrient in a serving of food contributes to a daily diet. 2,000 calories a day is used for general nutrition advice.

Calories per gram:
Fat 9 • Carbohydrate 4 • Protein 4

Standard Vertical
(Side-by-Side Display)

Nutrition Facts

8 servings per container
Serving size **2/3 cup (55g)**

Amount per serving
Calories **230**

	% Daily Value*
Total Fat 8g	**10%**
Saturated Fat 1g	**5%**
Trans Fat 0g	
Cholesterol 0mg	**0%**
Sodium 160mg	**7%**
Total Carbohydrate 37g	**13%**
Dietary Fiber 4g	**14%**
Total Sugars 12g	
Includes 10g Added Sugars	**20%**
Protein 3g	

Vit. D 2mcg 10% • Calcium 260mg 20%
Iron 8mg 45% • Potas. 235mg 6%

* The % Daily Value (DV) tells you how much a nutrient in a serving of food contributes to a daily diet. 2,000 calories a day is used for general nutrition advice.

(13)(i) Nutrition labels on the outer label of packages of products that contain two or more separately packaged foods that are intended to be eaten individually (e.g., variety packs of cereals or snack foods) or of packages that are used interchangeably for the same type of food (e.g., round ice cream containers) may use an aggregate display.

(ii) Aggregate displays shall comply with the format requirements of paragraph (d) of this section to the maximum extent possible, except that the identity of each food shall be specified immediately to the right of the ''Nutrition Facts'' heading, and both the quantitative amount by weight (*i.e.*, g/mg/mcg amounts) and the percent Daily Value for each nutrient shall be listed in separate columns under the name of each food. The following sample label illustrates an aggregate display.

Aggregate Display

Nutrition Facts	Wheat Squares Sweetened		Corn Flakes Not Sweetened		Mixed Grain Flakes Sweetened	
1 serving per container						
Serving size 1 box	(35g)		(19g)		(27g)	
Amount per serving						
Calories	**130**		**70**		**100**	
		% Daily Value*		% Daily Value*		% Daily Value*
Total Fat	0g	**0%**	0g	**0%**	0g	**0%**
Saturated Fat	0g	**0%**	0g	**0%**	0g	**0%**
Trans Fat	0g		0g		0g	
Cholesterol	0mg	**0%**	0mg	**0%**	0mg	**0%**
Sodium	0mg	**0%**	200mg	**9%**	120mg	**5%**
Total Carbohydrate	29g	**11%**	17g	**6%**	24g	**9%**
Dietary Fiber	3g	**11%**	1g	**4%**	1g	**4%**
Total Sugars	8g		6g		13g	
Includes Added Sugars	8g	**16%**	5g	**10%**	13g	**26%**
Protein	4g		1g		1g	
* The % Daily Value (DV) tells you how much a nutrient in a serving of food contributes to a daily diet. 2,000 calories a day is used for general nutrition advice						
Vitamin D	2mcg	10%	2mcg	10%	0mcg	0%
Calcium	0mg	0%	0mg	0%	0mg	0%
Iron	2mg	10%	1mg	6%	4mg	20%
Potassium	125mg	4%	25mg	1%	30mg	1%
Vitamin A		0%		10%		10%
Vitamin C		0%		15%		90%
Thiamin		35%		15%		25%
Riboflavin		30%		10%		25%
Niacin		30%		10%		20%
Vitamin B_6		30%		20%		20%

(14) In accordance with §101.15(c)(2), when nutrition labeling must appear in a second language, the nutrition information may be presented in a separate nutrition label for each language or in one nutrition label with the information in the second language following that in English. Numeric characters that are identical in both languages need not be repeated (e.g., ''Protein/Proteinas 2 g''). All required information must be included in both languages.

(e) Nutrition information may be presented for two or more forms of the same food (*e.g.*, both ''as purchased'' and ''as prepared'') or for common combinations of food as provided for in paragraph (h)(4) of this section, for different units (*e.g.*, slices of bread or per 100 grams) as provided for in paragraph (b) of this section, or for two or more groups for which RDIs are established (*e.g.*, both infants through 12 months of age and children 1 through 3 years of age) as shown in paragraph (e)(5) of this section. When such dual labeling is provided, equal prominence shall be given to both sets of values. Information shall be presented in a format consistent with paragraph (d) of this section, except that:

(1) Following the serving size information there shall be two or more column headings accurately describing the amount per serving size of the form of the same food (*e.g.*, ''Per ¼ cup mix'' and ''Per prepared portion''), the combinations of food, the units, or the RDI groups that are being declared as shown in paragraph (e)(5) of this section.

(2) The quantitative information by weight as required in paragraph (d)(7)(i) and the information required in paragraph (d)(7)(ii) of this section shall be presented for the form of the product as packaged and for any other form of the product (*e.g.*, ''as prepared'' or combined with another ingredient as shown in paragraph (e)(5) of this section).

(3) When the dual labeling is presented for two or more forms of the

same food, for combinations of food, for different units, or for two or more groups for which RDIs are established, the quantitative information by weight and the percent Daily Value shall be presented in two columns and the columns shall be separated by vertical lines as shown in paragraph (e)(5) of this section.

(4) Nutrient information for vitamins and minerals (except sodium) shall be separated from information on other nutrients by a bar and shall be arrayed vertically in the following order: Vitamin D, calcium, iron, potassium as shown in paragraph (e)(5) of this section.

(5) The following sample label illustrates the provisions of paragraph (e) of this section:

Dual Columns, Two Forms of the Same Food

Nutrition Facts

12 servings per container

Serving size **1/4 cup dry mix (44g)**

	Per 1/4 cup dry mix		Per baked portion	
Calories	**170**		**300**	
		% DV*		% DV*
Total Fat	1.5g	**2%**	16g	**21%**
Saturated Fat	1g	**5%**	5g	**25%**
Trans Fat	0g		0g	
Cholesterol	0mg	**0%**	60mg	**20%**
Sodium	300mg	**13%**	375mg	**16%**
Total Carb.	36g	**13%**	36g	**13%**
Dietary Fiber	<1g	**2%**	<1g	**2%**
Total Sugars	18g		18g	
Incl. Added Sugars	18g	**36%**	18g	**36%**
Protein	2g		3g	
Vitamin D	0mcg	0%	0mcg	0%
Calcium	100mg	8%	100mg	8%
Iron	1mg	6%	1mg	6%
Potassium	40mg	0%	40mg	0%

* The % Daily Value (DV) tells you how much a nutrient in a serving of food contributes to a daily diet. 2,000 calories a day is used for general nutrition advice.

(6) When dual labeling is presented for a food on a per serving basis and per container basis as required in paragraph (b)(12)(i) of this section or on a per serving basis and per unit basis as required in paragraph (b)(2)(i)(D) of

this section, the quantitative information by weight as required in paragraph (d)(7)(i) and the percent Daily Value as required in paragraph (d)(7)(ii) shall be presented in two columns, and the columns shall be separated by vertical lines as shown in the displays in paragraph (e)(6)(i) of this section.

(i) Nutrient information for vitamins and minerals shall be separated from information on other nutrients by a bar and shall be arrayed vertically in the following order: Vitamin D, calcium, iron, and potassium as shown in the following sample labels.

Dual Column Display, Per Serving and Per Container

Nutrition Facts

2 servings per container

Serving size **1 cup (255g)**

	Per serving		Per container	
Calories	**220**		**440**	
		% DV*		% DV*
Total Fat	5g	**6%**	10g	**13%**
Saturated Fat	2g	**10%**	4g	**20%**
Trans Fat	0g		0g	
Cholesterol	15mg	**5%**	30mg	**10%**
Sodium	240mg	**10%**	480mg	**21%**
Total Carb.	35g	**13%**	70g	**25%**
Dietary Fiber	6g	**21%**	12g	**43%**
Total Sugars	7g		14g	
Incl. Added Sugars	4g	**8%**	8g	**16%**
Protein	9g		18g	
Vitamin D	5mcg	25%	10mcg	50%
Calcium	200mg	15%	400mg	30%
Iron	1mg	6%	2mg	10%
Potassium	470mg	10%	940mg	20%

* The % Daily Value (DV) tells you how much a nutrient in a serving of food contributes to a daily diet. 2,000 calories a day is used for general nutrition advice.

Dual Columns, Per Serving and Per Unit

Nutrition Facts

12 servings per container
Serving size **1/2 muffin (144g)**

	Per 1/2 muffin		Per 1 muffin	
Calories	**380**		**760**	
		% DV*		% DV*
Total Fat	16g	**21%**	32g	**41%**
Saturated Fat	3g	**15%**	6g	**30%**
Trans Fat	0g		0g	
Cholesterol	50mg	**17%**	100mg	**33%**
Sodium	480mg	**21%**	960mg	**42%**
Total Carb.	56g	**20%**	112g	**41%**
Dietary Fiber	2g	**7%**	4g	**14%**
Total Sugars	32g		64g	
Incl. Added Sugars	30g	**60%**	60g	**120%**
Protein	3g		6g	
Vitamin D	0.1mcg	0%	0.2mcg	2%
Calcium	40mg	4%	80mg	6%
Iron	2mg	10%	4mg	20%
Potassium	190mg	4%	380mg	8%

* The % Daily Value (DV) tells you how much a nutrient in a serving of food contributes to a daily diet. 2,000 calories a day is used for general nutrition advice.

(ii) The following sample label illustrates the provisions of paragraphs (b)(2)(i)(D) and (b)(12)(i) of this section for labels that use the tabular display.

Tabular Dual Column Display

Nutrition Facts

2 servings per container
Serving size
1 cup (255g)

Calories
220 per serving | **440** per container

	Per serving	% DV*	Per container	% DV*		Per serving	% DV*	Per container	% DV*
Total Fat	5g	**6%**	10g	**13%**	**Total Carb.**	35g	**13%**	70g	**25%**
Saturated Fat	2g	**10%**	4g	**20%**	Dietary Fiber	6g	**21%**	12g	**43%**
Trans Fat	0g		0g		Total Sugars	7g		14g	
Cholesterol	15mg	**5%**	30mg	**10%**	Incl. Added Sugars	4g	**8%**	8g	**16%**
Sodium	240mg	**10%**	480mg	**21%**	**Protein**	9g		18g	
Vitamin D	5mcg	25%	10mcg	50%	Iron	1mg	6%	2mg	10%
Calcium	200mg	15%	400mg	30%	Potassium	470mg	10%	940mg	20%

*The % Daily Value (DV) tells you how much a nutrient in a serving of food contributes to a daily diet. 2,000 calories a day is used for general nutrition advice.

(f) The declaration of nutrition information may be presented in the simplified format set forth herein when a food product contains insignificant amounts of eight or more of the following: Calories, total fat, saturated fat, *trans* fat, cholesterol, sodium, total carbohydrate, dietary fiber, total sugars, added sugars, protein, vitamin D, calcium, iron, and potassium; except that for foods intended for infants through 12 months of age and children 1 through 3 years of age to which paragraph (j)(5)(i) of this section applies, nutrition information may be presented in the simplified format when a food product contains insignificant amounts of six or more of the following: Calories, total fat, sodium, total carbohydrate, dietary fiber, total sugars, added sugars, protein, vitamin D, calcium, iron, and potassium.

(1) An ''insignificant amount'' shall be defined as that amount that allows a declaration of zero in nutrition labeling, except that for total carbohydrate, dietary fiber, and protein, it shall be an amount that allows a declaration of ''less than 1 gram.''

(2) The simplified format shall include information on the following nutrients:

(i) Total calories, total fat, total carbohydrate, protein, and sodium;

(ii) Any other nutrients identified in paragraph (f) of this section that are present in the food in more than insignificant amounts; and

(iii) Any vitamins and minerals listed in paragraph (c)(8)(iv) of this section when they are required to be added as a nutrient supplement to foods for which a standard of identity exists.

(iv) Any vitamins or minerals listed in paragraph (c)(8)(iv) of this section voluntarily added to the food as nutrient supplements.

(3) Other nutrients that are naturally present in the food in more than insignificant amounts may be voluntarily declared as part of the simplified format.

(4) If any nutrients are declared as provided in paragraphs (f)(2)(iii), (f)(2)(iv), or (f)(3) of this section as part of the simplified format or if any nutrition claims are made on the label or in labeling, the statement ''Not a significant source of _____'' (with the blank filled in with the name(s) of any nutrient(s) identified in paragraph (f) of this section that are present in insignificant amounts) shall be included at the bottom of the nutrition label.

Simplified Display

(5) Except as provided for in paragraphs (j)(5) and (j)(13) of this section, nutrient information declared in the simplified format shall be presented in the same manner as specified in paragraphs (d) or (e) of this section, except that the footnote required in paragraph (d)(9) of this section is not required, and an asterisk shall be placed at the bottom of the label followed by the statement ''% DV = % Daily Value'' when ''Daily Value'' is not spelled out in the heading, as shown in paragraph (f)(4).

(g) Compliance with this section shall be determined as follows:

(1) A collection of primary containers or units of the same size, type, and style produced under conditions as nearly uniform as possible, designated by a common container code or marking, or in the absence of any common container code or marking, a day's production, constitutes a ''lot.''

(2) The sample for nutrient analysis shall consist of a composite of 12 subsamples (consumer units), taken 1 from each of 12 different randomly chosen shipping cases, to be representative of a lot. Unless a particular method of analysis is specified in paragraph (c) of this section, composites shall be analyzed by appropriate methods as given in the ''Official Methods of Analysis of the AOAC International,'' or, if no AOAC method is available or appropriate, by other reliable and appropriate analytical procedures.

(3) Two classes of nutrients are defined for purposes of compliance:

(i) *Class I.* Added nutrients in fortified or fabricated foods; and

(ii) Class II. Naturally occurring (indigenous) nutrients. When a nutrient is naturally occurring (indigenous) in a food or an ingredient that is added to a food, the total amount of such nutrient in the final food product is subject to class II requirements, except that when an exogenous source of the nutrient is also added to the final food product, the total amount of the nutrient in the final food product (indigenous and exogenous) is subject to class I requirements.

(4) A food with a label declaration of a vitamin, mineral, protein, total carbohydrate, dietary fiber, soluble fiber, insoluble fiber, polyunsaturated or monounsaturated fat shall be deemed to be misbranded under section 403(a) of the Federal Food, Drug, and Cosmetic Act (the act) unless it meets the following requirements:

(i) When a vitamin, mineral, protein, or dietary fiber meets the definition of a Class I nutrient, the nutrient content of the composite must be formulated to be at least equal to the value for that nutrient declared on the label.

(ii) When a vitamin, mineral, protein, total carbohydrate, polyunsaturated or monounsaturated fat, or dietary fiber meets the definition of a Class II nutrient, the nutrient content of the composite must be at least equal to 80 percent of the value for that nutrient declared on the label. *Provided,* That no regulatory action will be based on a determination of a nutrient value that falls below this level by a factor less than the variability generally recognized for the analytical method used in that food at the level involved.

(5) A food with a label declaration of calories, total sugars, added sugars (when the only source of sugars in the food is added sugars), total fat, saturated fat, *trans* fat, cholesterol, or sodium shall be deemed to be misbranded under section 403(a) of the act if the nutrient content of the composite is greater than 20 percent in excess of the value for that nutrient declared on the label. *Provided,* That no regulatory action will be based on a determination of a nutrient value that falls above this level by a factor less than the variability generally recognized for the analytical method used in that food at the level involved.

(6) Reasonable excesses of vitamins, minerals, protein, total carbohydrate, dietary fiber, soluble fiber, insoluble fiber, sugar alcohols, polyunsaturated or monounsaturated fat over labeled amounts are acceptable within current good manufacturing practice. Reasonable deficiencies of calories, total sugars, added sugars, total fat, saturated fat, *trans* fat, cholesterol, or sodium under labeled amounts are acceptable within current good manufacturing practice.

(7) Compliance will be based on the metric measure specified in the label statement of serving size.

(8) Alternatively, compliance with the provisions set forth in paragraphs (g)(1) through (6) of this section may be provided by use of an FDA approved database that has been computed following FDA guideline procedures and where food samples have been handled in accordance with current good manufacturing practice to prevent nutrition loss. FDA approval of a database shall not be considered granted until the Center for Food Safety and Applied Nutrition has agreed to all aspects of the database in writing. The approval will be granted where a clear need is presented (*e.g.*, raw produce and seafood). Approvals will be in effect for a limited time, *e.g.*, 10 years, and will be eligible for renewal in the absence of significant changes in agricultural or industry practices. Approval requests shall be submitted in accordance with the provisions of § 10.30 of this chapter. Guidance in the use of databases may be found in the ''FDA Nutrition Labeling Manual—A Guide for Developing and Using Data Bases,'' available from the Office of Nutrition and Food Labeling (HFS–800), Center for Food Safety and Applied Nutrition, Food and Drug Administration, 5001 Campus Dr., College Park, MD 20740 or by going to *http://www.fda.gov*.

(9) When it is not technologically feasible, or some other circumstance makes it impracticable, for firms to comply with the requirements of this section (e.g., to develop adequate nutrient profiles to comply with the requirements of paragraph (c) of this section), FDA may permit alternative means of compliance or additional exemptions to deal with the situation. Firms in need of such special allowances shall make their request in writing to the Center for Food Safety and Applied Nutrition (HFS–800), Food and Drug Administration, 5001 Campus Dr., College Park, MD 20740.

(10) The manufacturer must make and keep written records (*e.g.*, analyses of databases, recipes, formulations, information from recipes or formulations, or batch records) to verify the declared amount of that nutrient on the Nutrition Facts label as follows:

(i) When a mixture of dietary fiber, and added non-digestible carbohydrate(s) that does not meet the definition of dietary fiber, is present in the food, a manufacturer must make and keep written records of the amount of non-digestible carbohydrate(s) added to the food that does not meet the definition of dietary fiber.

(ii) When a mixture of soluble fiber and added non-digestible carbohydrate(s) that does not meet the definition of dietary fiber is present in the food, a manufacturer must make and keep written records necessary to verify the amount of the non-digestible carbohydrate(s) added to the food that does not meet the definition of dietary fiber.

(iii) When a mixture of insoluble fiber and added non-digestible carbohydrate(s) that does not meet the definition of dietary fiber is present in the food, a manufacturer must make and keep written records necessary to verify the amount of the non-digestible carbohydrate(s) added to the food that does not meet the definition of dietary fiber.

(iv) When a mixture of naturally occurring and added sugars is present in the food, a manufacturer must make and keep written records of the amount of added sugars added to the food during the processing of the food, and if packaged as a separate ingredient, as packaged (whether as part of a package containing one or more ingredients or packaged as a single ingredient).

(v) When the amount of sugars added to food products is reduced through non-enzymatic browning and/or fermentation, manufacturers must:

(A) Make and keep records of all relevant scientific data and information relied upon by the manufacturer that demonstrates the amount of added sugars in the food after non-enzymatic browning and/or fermentation and a narrative explaining why the data and information are sufficient to demonstrate the amount of added sugars declared in the finished food, provided the data and information used is specific to the type of food that is subject to non-enzymatic browning and/or fermentation; or

(B) Make and keep records of the amount of added sugars added to the food before and during the processing of the food, and if packaged as a separate ingredient, as packaged (whether

as part of a package containing one or more ingredients or packaged as a single ingredient) and in no event shall the amount of added sugars declared exceed the amount of total sugars on the label; or

(C) Submit a petition, under 21 CFR 10.30, to request an alternative means of compliance. The petition must provide scientific data or other information for why the amount of added sugars in a serving of the product is likely to have a significant reduction in added sugars compared to the amount added prior to non-enzymatic browning and/or fermentation. A significant reduction would be where reduction in added sugars after non-enzymatic browning and/or fermentation may be significant enough to impact the label declaration for added sugars by an amount that exceeds the reasonable deficiency acceptable within good manufacturing practice under paragraph (g)(6) of this section. In addition, the scientific data or other information must include the reason that the manufacturer is unable to determine a reasonable approximation of the amount of added sugars in a serving of their finished product and a description of the process that they used to come to that conclusion.

(vi) When a mixture of *all rac*-α-tocopherol and RRR-α-tocopherol is present in a food, manufacturers must make and keep written records of the amount of *all rac*-α-tocopherol added to the food and RRR-α-tocopherol in the finished food.

(vii) When a mixture of folate and folic acid is present in a food, manufacturers must make and keep written records of the amount of synthetic folate and/or folic acid added to the food and the amount of naturally-occurring folate in the finished food.

(11) Records necessary to verify certain nutrient declarations that are specified in paragraph (g)(10) of this section must be kept for a period of at least 2 years after introduction or delivery for introduction of the food into interstate commerce. Such records must be provided to FDA upon request, during an inspection, for official review and photocopying or other means of reproduction. Records required to verify information on the label may be kept either as original records, true copies (such as photocopies, pictures, scanned copies, microfilm, microfiche, or other accurate reproductions of the original records), or electronic records which must be kept in accordance with part 11 of this chapter. These records must be accurate, indelible, and legible.

Failure to make and keep the records or provide the records to appropriate regulatory authorities, as required by this paragraph (g)(11), would result in the food being misbranded under section 403(a)(1) of the act.

(h) Products with separately packaged ingredients or foods, with assortments of food, or to which other ingredients are added by the user may be labeled as follows:

(1) If a product consists of two or more separately packaged ingredients enclosed in an outer container or of assortments of the same type of food (e.g., assorted nuts or candy mixtures) in the same retail package, nutrition labeling shall be located on the outer container or retail package (as the case may be) to provide information for the consumer at the point of purchase. However, when two or more food products are simply combined together in such a manner that no outer container is used, or no outer label is available, each product shall have its own nutrition information, e.g., two boxes taped together or two cans combined in a clear plastic overwrap. When separately packaged ingredients or assortments of the same type of food are intended to be eaten at the same time, the nutrition information may be specified per serving for each component or as a composite value.

(2) If a product consists of two or more separately packaged foods that are intended to be eaten individually and that are enclosed in an outer container (e.g., variety packs of cereals or snack foods), the nutrition information shall:

(i) Be specified per serving for each food in a location that is clearly visible to the consumer at the point of purchase; and

(ii) Be presented in separate nutrition labels or in one aggregate nutrition label with separate columns for the quantitative amount by weight and the percent Daily Value for each food.

(3) If a package contains a variety of foods, or an assortment of foods, and is in a form intended to be used as a gift, the nutrition labeling shall be in the form required by paragraphs (a) through (f) of this section, but it may be modified as follows:

(i) Nutrition information may be presented on the label of the outer package or in labeling within or attached to the outer package.

(ii) In the absence of a reference amount customarily consumed in § 101.12(b) that is appropriate for the variety or assortment of foods in a gift package, the following may be used as the standard serving size for purposes of nutrition labeling of foods subject to this paragraph: 1 ounce for solid foods; 2 fluid ounces for nonbeverage liquids (*e.g.*, syrups); 8 ounces for beverages that consist of milk and fruit juices, nectars and fruit drinks; and 12 fluid ounces for other beverages. However, the reference amounts customarily consumed in § 101.12(b) shall be used for purposes of evaluating whether individual foods in a gift package qualify for nutrient content claims or health claims.

(iii) The number of servings per container may be stated as ''varied.''

(iv) Nutrition information may be provided per serving for individual foods in the package, or, alternatively, as a composite per serving for reasonable categories of foods in the package having similar dietary uses and similar significant nutritional characteristics. Reasonable categories of foods may be used only if accepted by FDA. In determining whether a proposed category is reasonable, FDA will consider whether the values of the characterizing nutrients in the foods proposed to be in the category meet the compliance criteria set forth in paragraphs (g)(3) through (6) of this section. Proposals for such categories may be submitted in writing to the Office of Nutrition and Food Labeling (HFS–800), Center for Food Safety and Applied Nutrition, Food and Drug Administration, 5001 Campus Dr., College Park, MD 20740.

(v) If a food subject to paragraph (j)(13) of this section because of its small size is contained in a gift package, the food need not be included in the determination of nutrition information under paragraph (h) of this section if it is not specifically listed in a promotional catalogue as being present in the gift package, and:

(A) It is used in small quantities primarily to enhance the appearance of the gift package; or

(B) It is included in the gift package as a free gift or promotional item.

(4) If a food is commonly combined with other ingredients or is cooked or otherwise prepared before eating, and directions for such combination or preparations are provided, another column of figures may be used to declare nutrition information on the basis of the food as consumed in the format required in paragraph (e) of this section; *e.g.*, a dry ready-to-eat cereal may be described with the percent Daily Value and the quantitative amounts for the cereal as sold (*e.g.*, per ounce), and the percent Daily Value and the quantitative amounts for the cereal and milk as suggested in the label (*e.g.*, per ounce of cereal and ½cup of vitamin D fortified skim milk); and a cake mix may be labeled with the percent Daily Value and the quantitative amounts for the dry mix (per serving) and the percent Daily Value and the quantitative amounts for the serving of the final cake when prepared, as shown in paragraph (e)(5) of this section: Provided, that, the type and quantity of the other ingredients to be added to the product by the user and the specific method of cooking and other preparation shall be specified prominently on the label.

(i) Except as provided in paragraphs (j)(13) and (j)(17) of this section, the location of nutrition information on a label shall be in compliance with § 101.2.

(j) The following foods are exempt from this section or are subject to special labeling requirements:

(1)(i) Food offered for sale by a person who makes direct sales to consumers (*e.g.*, a retailer) who has annual gross sales made or business done in sales to consumers that is not more than $500,000 or has annual gross sales made or business done in sales of food to consumers of not more than $50,000, *Provided*, That the food bears no nutrition claims or other nutrition information

in any context on the label or in labeling or advertising. Claims or other nutrition information subject the food to the provisions of this section, § 101.10, or § 101.11, as applicable.

(ii) For purposes of this paragraph, calculation of the amount of sales shall be based on the most recent 2-year average of business activity. Where firms have been in business less than 2 years, reasonable estimates must indicate that annual sales will not exceed the amounts specified. For foreign firms that ship foods into the United States, the business activities to be included shall be the total amount of food sales, as well as other sales to consumers, by the firm in the United States.

(2) Except as provided in § 101.11, food products that are:

(i) Served in restaurants, *Provided*, That the food bears no nutrition claims or other nutrition information in any context on the label or in labeling or advertising. Claims or other nutrition information subject the food to the provisions of this section;

(ii) Served in other establishments in which food is served for immediate human consumption (*e.g.*, institutional food service establishments, such as schools, hospitals, and cafeterias; transportation carriers, such as trains and airplanes; bakeries, delicatessens, and retail confectionery stores where there are facilities for immediate consumption on the premises; food service vendors, such as lunch wagons, ice cream shops, mall cookie counters, vending machines, and sidewalk carts where foods are generally consumed immediately where purchased or while the consumer is walking away, including similar foods sold from convenience stores; and food delivery systems or establishments where ready-to-eat foods are delivered to homes or offices), *Provided*, That the food bears no nutrition claims or other nutrition information in any context on the label or in labeling or advertising, except as provided in § 101.8(c). Claims or other nutrition information, except as provided in § 101.8(c), subject the food to the provisions of this section;

(iii) Sold only in such facilities, *Provided*, That the food bears no nutrition claims or other nutrition information in any context on the label or in labeling or advertising. Claims or other nutrition information subject the food to the provisions of this section;

(iv) Used only in such facilities and not served to the consumer in the package in which they are received (e.g., foods that are not packaged in individual serving containers); or

(v) Sold by a distributor who principally sells food to such facilities: *Provided*, That:

(A) This exemption shall not be available for those foods that are manufactured, processed, or repackaged by that distributor for sale to any persons other than restaurants or other establishments that serve food for immediate human consumption, and

(B) The manufacturer of such products is responsible for providing the nutrition information on the products if there is a reasonable possibility that the product will be purchased directly by consumers.

(3) Except as provided in § 101.11, food products that are:

(i) Of the type of food described in paragraphs (j)(2)(i) and (j)(2)(ii) of this section,

(ii) Ready for human consumption,

(iii) Offered for sale to consumers but not for immediate human consumption,

(iv) Processed and prepared primarily in a retail establishment, and

(v) Not offered for sale outside of that establishment (e.g., ready-to-eat foods that are processed and prepared on-site and sold by independent delicatessens, bakeries, or retail confectionery stores where there are no facilities for immediate human consumption; by in-store delicatessen, bakery, or candy departments; or at self-service food bars such as salad bars), *Provided*, That the food bears no nutrition claims or other nutrition information in any context on the label or in labeling or advertising. Claims or other nutrition information subject the food to the provisions of this section.

(4) Except as provided in § 101.11, foods that contain insignificant amounts of all of the nutrients and food components required to be included in the declaration of nutrition information under paragraph (c) of this section, *Provided*, That the food bears no nutrition claims or other nutrition

information in any context on the label or in labeling or advertising. Claims or other nutrition information, except as provided in §101.8(c), subject the food to the provisions of this section. An insignificant amount of a nutrient or food component shall be that amount that allows a declaration of zero in nutrition labeling, except that for total carbohydrate, dietary fiber, and protein, it shall be an amount that allows a declaration of ''less than 1 gram.'' Examples of foods that are exempt under this paragraph include coffee beans (whole or ground), tea leaves, plain unsweetened instant coffee and tea, condiment-type dehydrated vegetables, flavor extracts, and food colors.

(5)(i) Foods, other than infant formula, represented or purported to be specifically for infants through 12 months of age and children 1 through 3 years of age shall bear nutrition labeling. The nutrients declared for infants through 12 months of age and children 1 through 3 years of age shall include calories, total fat, saturated fat, *trans* fat, cholesterol, sodium, total carbohydrates, dietary fiber, total sugars, added sugars, protein, and the following vitamins and minerals: Vitamin D, calcium, iron, and potassium.

(ii) Foods, other than infant formula, represented or purported to be specifically for infants through 12 months of age shall bear nutrition labeling, except that:

(A) Such labeling shall not declare a percent Daily Value for saturated fat, *trans* fat, cholesterol, sodium, dietary fiber, total sugars, or added sugars and shall not include a footnote.

(B) The following sample label illustrates the provisions of paragraph (j)(5)(ii) of this section.

Infants through 12 Months of Age

Nutrition Facts	
4 servings per container	
Serving size	**1 pack (70g)**
Amount per serving	
Calories	**25**
	% Daily Value
Total Fat 0g	**0%**
Saturated Fat 0g	
Trans Fat 0g	
Cholesterol 0mg	
Sodium 74mg	
Total Carbohydrate 5g	**5%**
Dietary Fiber 1g	
Total Sugars 3g	
Includes 0g Added Sugars	
Protein 0g	**0%**
Vitamin D 0mcg	0%
Calcium 5mg	2%
Iron 1mg	10%
Potassium 230mg	35%

(C)–(E) [Reserved]

(iii) Foods, other than infant formula, represented or purported to be specifically for children 1 through 3 years of age shall include a footnote that states: ''*The % Daily Value tells you how much a nutrient in a serving of food contributes to a daily diet. 1,000 calories a day is used for general nutrition advice.''

(A) The following sample label illustrates the provisions of paragraph (j)(5)(iii) of this section.

Children 1-3 Years

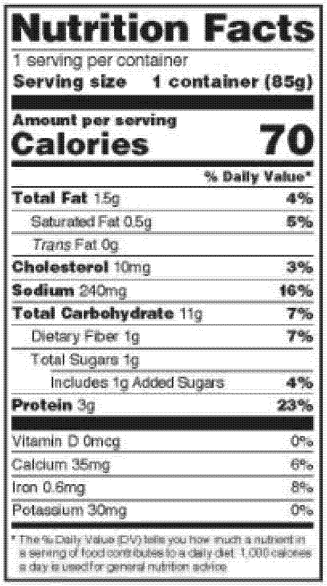

Nutrition Facts

1 serving per container

Serving size 1 container (85g)

Amount per serving

Calories 70

	% Daily Value*
Total Fat 1.5g	**4%**
Saturated Fat 0.5g	**5%**
Trans Fat 0g	
Cholesterol 10mg	**3%**
Sodium 240mg	**16%**
Total Carbohydrate 11g	**7%**
Dietary Fiber 1g	**7%**
Total Sugars 1g	
Includes 1g Added Sugars	**4%**
Protein 3g	**23%**
Vitamin D 0mcg	0%
Calcium 35mg	6%
Iron 0.6mg	8%
Potassium 30mg	0%

* The % Daily Value (DV) tells you how much a nutrient in a serving of food contributes to a daily diet. 1,000 calories a day is used for general nutrition advice.

(B) [Reserved]

(6) Dietary supplements, except that such foods shall be labeled in compliance with § 101.36.

(7) Infant formula subject to section 412 of the act, as amended, except that such foods shall be labeled in compliance with part 107 of this chapter.

(8) Medical foods as defined in section 5(b) of the Orphan Drug Act (21 U.S.C. 360ee(b)(3)). A medical food is a food which is formulated to be consumed or administered enterally under the supervision of a physician and which is intended for the specific dietary management of a disease or condition for which distinctive nutritional requirements, based on recognized scientific principles, are established by medical evaluation. A food is subject to this exemption only if:

(i) It is a specially formulated and processed product (as opposed to a naturally occurring foodstuff used in its natural state) for the partial or exclusive feeding of a patient by means of oral intake or enteral feeding by tube;

(ii) It is intended for the dietary management of a patient who, because of therapeutic or chronic medical needs, has limited or impaired capacity to ingest, digest, absorb, or metabolize ordinary foodstuffs or certain nutrients, or who has other special medically determined nutrient requirements, the dietary management of which cannot be achieved by the modification of the normal diet alone;

(iii) It provides nutritional support specifically modified for the management of the unique nutrient needs that result from the specific disease or condition, as determined by medical evaluation;

(iv) It is intended to be used under medical supervision; and

(v) It is intended only for a patient receiving active and ongoing medical

supervision wherein the patient requires medical care on a recurring basis for, among other things, instructions on the use of the medical food.

(9) Food products shipped in bulk form that are not for distribution to consumers in such form and that are for use solely in the manufacture of other foods or that are to be processed, labeled, or repacked at a site other than where originally processed or packed.

(10) Raw fruits, vegetables, and fish subject to section 403(q)(4) of the act, except that the labeling of such foods should adhere to guidelines in § 101.45. This exemption is contingent on the food bearing no nutrition claims or other nutrition information in any context on the label or in labeling or advertising. Claims or other nutrition information subject the food to nutrition labeling in accordance with § 101.45. The term *fish* includes freshwater or marine fin fish, crustaceans, and mollusks, including shellfish, amphibians, and other forms of aquatic animal life.

(11) Packaged single-ingredient products that consist of fish or game meat (i.e., animal products not covered under the Federal Meat Inspection Act or the Poultry Products Inspection Act, such as flesh products from deer, bison, rabbit, quail, wild turkey, or ostrich) subject to this section may provide required nutrition information for a 3-ounce cooked edible portion (i.e., on an ''as prepared'' basis), except that:

(i) Such products that make claims that are based on values as packaged must provide nutrition information on an as packaged basis, and

(ii) Nutrition information is not required for custom processed fish or game meats.

(12) Game meats (i.e., animal products not covered under the Federal Meat Inspection Act or the Poultry Products Inspection Act, such as flesh products from deer, bison, rabbit, quail, wild turkey, or ostrich) may provide required nutrition information on labeling in accordance with the provisions of paragraph (a)(2) of this section.

(13)(i) Foods in small packages that have a total surface area available to bear labeling of less than 12 square inches, *Provided*, That the labels for these foods bear no nutrition claims or other nutrition information in any context on the label or in labeling or advertising, except as provided in § 101.8(c). Claims or other nutrition information, except as provided in § 101.8(c), subject the food to the provisions of this section.

(A) The manufacturer, packer, or distributor shall provide on the label of packages that qualify for and use this exemption an address or telephone number that a consumer can use to obtain the required nutrition information (*e.g.*, ''For nutrition information, call 1–800–123–4567'').

(B) When such products bear nutrition labeling, either voluntarily or because nutrition claims or other nutrition information is provided, all required information shall be in type size no smaller than 6 point or all uppercase type of 1–16 inches minimum height, except that individual serving-size packages of food served with meals in restaurants, institutions, and on board passenger carriers, and not intended for sale at retail, may comply with § 101.2(c)(2).

(ii) Foods in packages that have a total surface area available to bear labeling of 40 or less square inches may modify the requirements of paragraphs (c) through (f) and (i) of this section by one or more of the following means:

(A) Presenting the required nutrition information in a tabular or, as provided below, linear (i.e., string) fashion rather than in vertical columns if the product has a total surface area available to bear labeling of less than 12 square inches, or if the product has a total surface area available to bear labeling of 40 or less square inches and the package shape or size cannot accommodate a standard vertical column or tabular display on any label panel. Nutrition information may be given in a linear fashion only if the label will not accommodate a tabular display.

(*1*) The following sample label illustrates the tabular display for small packages.

Tabular Display for Small Packages

Nutrition Facts	Amount/serving	% DV*	Amount/serving	% DV*
5 servings per container	**Total Fat** 2g	**3%**	**Total Carb.** 15g	**5%**
Serving size 1/6 cup (28g)	Sat. Fat 1g	**5%**	Fiber 0g	**0%**
	Trans Fat 0.5g		Total Sugars 14g	
	Cholesterol 10mg	**3%**	Incl. 13g Added Sugars	**26%**
Calories per serving 90	**Sodium** 200mg	**9%**	**Protein** 3g	
	Vitamin D 0% • Calcium 6% • Iron 6% • Potassium 10%			

(*2*) The following sample label illustrates the linear display.

Linear Display for Small Packages

Nutrition Facts Servings: 12, **Serv. size: 1 mint (2g),**
Amount per serving: **Calories 5,** **Total Fat** 0g (0% DV), Sat. Fat 0g (0% DV), *Trans* Fat 0g, **Cholest.** 0mg (0% DV), **Sodium** 0mg (0% DV), **Total Carb.** 2g (1% DV), Fiber 0g (0% DV), Total Sugars 2g (Incl. 2g Added Sugars, 4% DV), **Protein** 0g.
Vit. D (0% DV), Calcium (0% DV), Iron (0% DV), Potas. (5% DV).

(B) Using any of the following abbreviations:

Serving size—Serv size
Servings per container—Servings
Calories from saturated fat—Sat fat cal
Saturated fat—Sat fat
Monounsaturated fat—Monounsat fat
Polyunsaturated fat—Polyunsat fat
Cholesterol—Cholest
Total carbohydrate—Total carb. This abbreviation can also be used on dual-column displays as shown in paragraphs (e)(5), (e)(6)(i), and (e)(6)(ii).
Dietary fiber—Fiber
Soluble fiber—Sol fiber
Insoluble fiber—Insol fiber
Sugar alcohol—Sugar alc
Vitamin—Vit
Potassium—Potas
Includes—Incl. This abbreviation can also be used on dual-column displays as shown in paragraphs (e)(5), (e)(6)(i), and (e)(6)(ii) of this section.

(C) Presenting the required nutrition information on any label panel.

(14) Shell eggs packaged in a carton that has a top lid designed to conform to the shape of the eggs are exempt from outer carton label requirements where the required nutrition information is clearly presented immediately beneath the carton lid or in an insert that can be clearly seen when the carton is opened.

(15) The unit containers in a multiunit retail food package where:

(i) The multiunit retail food package labeling contains all nutrition information in accordance with the requirements of this section;

(ii) The unit containers are securely enclosed within and not intended to be separated from the retail package under conditions of retail sale; and

(iii) Each unit container is labeled with the statement ''This Unit Not Labeled For Retail Sale'' in type size not less than 1/16-inch in height, except that this statement shall not be required when the inner unit containers bear no labeling at all. The word ''individual'' may be used in lieu of or immediately preceding the word ''Retail'' in the statement.

(16) Food products sold from bulk containers: *Provided*, That nutrition information required by this section be

displayed to consumers either on the labeling of the bulk container plainly in view or in accordance with the provisions of paragraph (a)(2) of this section.

(17) Foods in packages that have a total surface area available to bear labeling greater than 40 square inches but whose principal display panel and information panel do not provide sufficient space to accommodate all required information may use any alternate panel that can be readily seen by consumers for the nutrition label. The space needed for vignettes, designs, and other nonmandatory label information on the principal display panel may be considered in determining the sufficiency of available space on the principal display panel for the placement of the nutrition label. Nonmandatory label information on the information panel shall not be considered in determining the sufficiency of available space for the placement of the nutrition label.

(18) Food products that are low-volume (that is, they meet the requirements for units sold in paragraphs (j)(18)(i) or (j)(18)(ii) of this section); that, except as provided in paragraph (j)(18)(iv) of this section, are the subject of a claim for an exemption that provides the information required under paragraph (j)(18)(iv) of this section, that is filed before the beginning of the time period for which the exemption is claimed, and that is filed by a person, whether it is the manufacturer, packer, or distributor, that qualifies to claim the exemption under the requirements for average full-time equivalent employees in paragraphs (j)(18)(i) or (j)(18)(ii) of this section; and whose labels, labeling, and advertising do not provide nutrition information or make a nutrient content or health claim.

(i) For food products first introduced into interstate commerce before May 8, 1994, the product shall be exempt for the period:

(A) Between May 8, 1995, and May 7, 1996, if, for the period between May 8, 1994, and May 7, 1995, the person claiming the exemption employed fewer than an average of 300 full-time equivalent employees and fewer than 400,000 units of that product were sold in the United States; and

(B) Between May 8, 1996, and May 7, 1997, if for the period between May 8, 1995, and May 7, 1996, the person claiming the exemption employed fewer than an average of 200 full-time equivalent employees and fewer than 200,000 units of that product were sold in the United States.

(ii) For all other food products, the product shall be eligible for an exemption for any 12-month period if, for the preceding 12 months, the person claiming the exemption employed fewer than an average of 100 full-time equivalent employees and fewer than 100,000 units of that product were sold in the United States, or in the case of a food product that was not sold in the 12-month period preceding the period for which exemption is claimed, fewer than 100,000 units of such product are reasonably anticipated to be sold in the United States during the period for which exemption is claimed.

(iii) If a person claims an exemption under paragraphs (j)(18)(i) or (j)(18)(ii) of this section for a food product and then, during the period of such exemption, the number of full-time equivalent employees of such person exceeds the appropriate number, or the number of food products sold in the United States exceeds the appropriate number, or, if at the end of the period of such exemption, the food product no longer qualifies for an exemption under the provisions of paragraphs (j)(18)(i) or (j)(18)(ii) of this section, such person shall have 18 months from the date that the product was no longer qualified as a low-volume product of a small business to comply with this section.

(iv) A notice shall be filed with the Office of Nutrition and Food Labeling (HFS–800), Center for Food Safety and Applied Nutrition, Food and Drug Administration, 5001 Campus Dr., College Park, MD 20740 and contain the following information, except that if the person is not an importer and has fewer than 10 full-time equivalent employees, that person does not have to file a notice for any food product with annual sales of fewer than 10,000 total units:

(A) Name and address of person requesting exemption. This should include a telephone number or FAX number that can be used to contact the person along with the name of a specific contact;

(B) Names of the food products (including the various brand names) for which exemption is claimed;

(C) Name and address of the manufacturer, distributor, or importer of the food product for which an exemption is claimed, if different than the person that is claiming the exemption;

(D) The number of full-time equivalent employees. Provide the average number of full-time equivalent individuals employed by the person and its affiliates for the 12 months preceding the period for which a small business exemption is claimed for a product. The average number of full-time equivalent employees is to be determined by dividing the total number of hours of salary or wages paid to employees of the person and its affiliates by the number of hours of work in a year, 2,080 hours (i.e., 40 hours × 52 weeks);

(E) Approximate total number of units of the food product sold by the person in the United States in the 12-month period preceding that for which a small business exemption is claimed. Provide the approximate total number of units sold, or expected to be sold, in a 12-month period for each product for which an exemption is claimed. For products that have been in production for 1 year or more prior to the period for which exemption is claimed, the 12-month period is the period immediately preceding the period for which an exemption is claimed. For other products, the 12-month period is the period for which an exemption is claimed; and

(F) The notice shall be signed by a responsible individual for the person who can certify the accuracy of the information presented in the notice. The individual shall certify that the information contained in the notice is a complete and accurate statement of the average number of full-time equivalent employees of this person and its affiliates and of the number of units of the product for which an exemption is claimed sold by the person. The individual shall also state that should the average number of full-time equivalent employees or the number of units of food products sold in the United States by the person exceed the applicable numbers for the time period for which exemption is claimed, the person will notify FDA of that fact and the date on which the number of employees or the number of products sold exceeded the standard.

(v) FDA may by regulation lower the employee or units of food products requirements of paragraph (j)(18)(ii) of this section for any food product first introduced into interstate commerce after May 8, 2002, if the agency determines that the cost of compliance with such lower requirement will not place an undue burden on persons subject to it.

(vi) For the purposes of this paragraph, the following definitions apply:

(A) *Unit* means the packaging or, if there is no packaging, the form in which a food product is offered for sale to consumers.

(B) *Food product* means food in any sized package which is manufactured by a single manufacturer or which bears the same brand name, which bears the same statement of identity, and which has similar preparation methods.

(C) *Person* means all domestic and foreign affiliates, as defined in 13 CFR 121.401, of the corporation, in the case of a corporation, and all affiliates, as defined in 13 CFR 121.401, of a firm or other entity, when referring to a firm or other entity that is not a corporation.

(D) *Full-time equivalent employee* means all individuals employed by the person claiming the exemption. This number shall be determined by dividing the total number of hours of salary or wages paid directly to employees of the person and of all of its affiliates by the number of hours of work in a year, 2,080 hours (i.e., 40 hours × 52 weeks).

(k) A food labeled under the provisions of this section shall be deemed to be misbranded under sections 201(n) and 403(a) of the act if its label or labeling represents, suggests, or implies:

(1) That the food, because of the presence or absence of certain dietary properties, is adequate or effective in the

prevention, cure, mitigation, or treatment of any disease or symptom. Information about the relationship of a dietary property to a disease or health-related condition may only be provided in conformance with the requirements of § 101.14 and part 101, subpart E.

(2) That the lack of optimum nutritive quality of a food, by reason of the soil on which that food was grown, is or may be responsible for an inadequacy or deficiency in the quality of the daily diet.

(3) That the storage, transportation, processing, or cooking of a food is or may be responsible for an inadequacy or deficiency in the quality of the daily diet.

(4) That a natural vitamin in a food is superior to an added or synthetic vitamin.

(l) The standards required in this section are incorporated by reference into this section with the approval of the Director of the Federal Register under 5 U.S.C. 552(a) and 1 CFR part 51. All approved material is available for inspection at the Office of Nutrition and Food Labeling (HFS–800), Center for Food Safety and Applied Nutrition, Food and Drug Administration, 5001 Campus Dr., College Park, MD 20740, 240–402–2404 and is available from the sources indicated below. It is also available for inspection at the National Archives and Records Administration (NARA). For information on the availability of this material at NARA, call 202–741–6030, or go to: *http://www.archives.gov/federal_register/code_of_federal_regulations/ibr_locations.html*.

(1) AOAC Reseller. Techstreet, 6300 Interfirst Dr., Ann Arbor, MI 48108, Toll free in United States: 1–800–699–9277, Outside United States: 1–734–780–8000, Fax: 1–734–780–2046, *www.techstreet.com*, *techstreet.service@thomsonreuters.com*. FDA does not endorse any particular reseller and notes that other resellers also may have the reference for sale. Consult FDA at 240–402–2404 for more information on additional resellers.

(i) ''Official Methods of Analysis of the AOAC INTERNATIONAL,'' 19th Edition, Volumes 1 and 2, 2012.

(ii) [Reserved]

(2) Food and Agriculture Organization of the United Nations/World Health Organization (FAO/WHO), Publications Division, Viale delle Terme di Caracalla, 00100 Rome, Italy

(i) FAO Food and Nutrition Paper 51,''Report of the Joint FAO/WHO Expert Consultation on Protein Quality Evaluation,'' Rome, 1991. *http://apps.who.int/iris/bitstream/ 10665/38133/1/9251030979_eng.pdf*.

(ii) [Reserved]

(3) United States Department of Agriculture (USDA), Agricultural Research Service, Washington, DC, Nutrient Data Laboratory, Bldg. 005 Room 105 BARC-West, Beltsville, MD 20705, 301–504–0630. *http://www.ars.usda.gov/News/docs.htm?docid=9447*.

(i) USDA Handbook No. 74, Energy Value of Foods—basis and derivation, by A. L. Merrill and B. K. Watt, (slightly revised, 1973) *http://www.ars.usda.gov/SP2UserFiles/ Place/80400525/Data/Classics/ah74.pdf*.

(ii) [Reserved]

[58 FR 2175, Jan. 6, 1993]

EDITORIAL NOTE: For FEDERAL REGISTER citations affecting § 101.9, see the List of CFR Sections Affected, which appears in the Finding Aids section of the printed volume and at *www.govinfo.gov*.

§ 101.10 Nutrition labeling of restaurant foods whose labels or labeling bear nutrient content claims or health claims.

Nutrition labeling in accordance with § 101.9 shall be provided upon request for any restaurant food or meal for which a nutrient content claim (as defined in § 101.13 or in subpart D of this part) or a health claim (as defined in § 101.14 and permitted by a regulation in subpart E of this part) is made, except that information on the nutrient amounts that are the basis for the claim (*e.g.*, ''low fat, this meal provides less than 10 grams of fat'') may serve as the functional equivalent of complete nutrition information as described in § 101.9. For the purposes of this section, restaurant food includes two categories of food. It includes food which is served in restaurants or other establishments in which food is served for immediate human consumption or which is sold for sale or use in such establishments. It also includes food which is processed and prepared primarily in a retail establishment, which

is ready for human consumption, which is of the type described in the previous sentence, and which is offered for sale to consumers but not for immediate human consumption in such establishment and which is not offered for sale outside such establishment. For standard menu items that are offered for sale in covered establishments (as defined in § 101.11(a)), the information in the written nutrition information required by § 101.11(b)(2)(ii)(A) will serve to meet the requirements of this section. Nutrient levels may be determined by nutrient databases, cookbooks, or analyses or by other reasonable bases that provide assurance that the food or meal meets the nutrient requirements for the claim. Presentation of nutrition labeling may be in various forms, including those provided in § 101.45 and other reasonable means.

[79 FR 71253, Dec. 1, 2014]

§ 101.11 Nutrition labeling of standard menu items in covered establishments.

(a) *Definitions*. The definitions of terms in section 201 of the Federal Food, Drug, and Cosmetic Act apply to such terms when used in this section. In addition, for purposes of this section:

Authorized official of a restaurant or similar retail food establishment means the owner, operator, agent in charge, or other person authorized by the owner, operator, or agent in charge to register the restaurant or similar retail food establishment, which is not otherwise subject to section 403(q)(5)(H) of the Federal Food, Drug, and Cosmetic Act, with FDA for the purposes of paragraph (d) of this section.

Combination meal means a standard menu item that consists of more than one food item, for example a meal that includes a sandwich, a side dish, and a drink. A combination meal may be represented on the menu or menu board in narrative form, numerically, or pictorially. Some combination meals may include a variable menu item or be a variable menu item as defined in this paragraph where the components may vary. For example, the side dish may vary among several options (*e.g.*, fries, salad, or onion rings) or the drinks may vary (*e.g.*, soft drinks, milk, or juice) and the customer selects which of these items will be included in the meal.

Covered establishment means a restaurant or similar retail food establishment that is a part of a chain with 20 or more locations doing business under the same name (regardless of the type of ownership, *e.g.*, individual franchises) and offering for sale substantially the same menu items, as well as a restaurant or similar retail food establishment that is registered to be covered under paragraph (d) of this section.

Custom order means a food order that is prepared in a specific manner based on an individual customer's request, which requires the covered establishment to deviate from its usual preparation of a standard menu item, *e.g.*, a club sandwich without the bacon if the establishment usually includes bacon in its club sandwich.

Daily special means a menu item that is prepared and offered for sale on a particular day, that is not routinely listed on a menu or menu board or offered by the covered establishment, and that is promoted by the covered establishment as a special menu item for that particular day.

Doing business under the same name means sharing the same name. The term ''name'' refers to either:

(i) The name of the establishment presented to the public; or

(ii) If there is no name of the establishment presented to the public (*e.g.*, an establishment with the generic descriptor ''concession stand''), the name of the parent entity of the establishment. When the term ''name'' refers to the name of the establishment presented to the public under paragraph (i) of this definition, the term ''same'' includes names that are slight variations of each other, for example, due to the region, location, or size (*e.g.*, ''New York Ave. Burgers'' and ''Pennsylvania Ave. Burgers'' or ''ABC'' and ''ABC Express'').

Food on display means restaurant-type food that is visible to the customer before the customer makes a selection, so long as there is not an ordinary expectation of further preparation by the consumer before consumption.

Food that is part of a customary market test means food that appears on a menu or menu board for less than 90 consecutive days in order to test consumer acceptance of the product.

Location means a fixed position or site.

Menu or menu board means the primary writing of the covered establishment from which a customer makes an order selection, including, but not limited to, breakfast, lunch, and dinner menus; dessert menus; beverage menus; children's menus; other specialty menus; electronic menus; and menus on the Internet. Determining whether a writing is or is part of the primary writing of the covered establishment from which a customer makes an order selection depends on a number of factors, including whether the writing lists the name of a standard menu item (or an image depicting the standard menu item) and the price of the standard menu item, and whether the writing can be used by a customer to make an order selection at the time the customer is viewing the writing. The menus may be in different forms, *e.g.*, booklets, pamphlets, or single sheets of paper. Menu boards include those inside a covered establishment as well as drive-through menu boards at covered establishments.

Offering for sale substantially the same menu items means offering for sale a significant proportion of menu items that use the same general recipe and are prepared in substantially the same way with substantially the same food components, even if the name of the menu item varies, (*e.g.*, ''Bay View Crab Cake'' and ''Ocean View Crab Cake''). ''Menu items'' in this definition refers to food items that are listed on a menu or menu board or that are offered as self-service food or food on display. Restaurants and similar retail food establishments that are part of a chain can still be offering for sale substantially the same menu items if the availability of some menu items varies within the chain. Having the same name may indicate, but does not necessarily guarantee, that menu items are substantially the same.

Restaurant or similar retail food establishment means a retail establishment that offers for sale restaurant-type food, except if it is a school as defined by 7 CFR 210.2 or 220.2.

Restaurant-type food means food that is:

(i) Usually eaten on the premises, while walking away, or soon after arriving at another location; and

(ii) Either:

(A) Served in restaurants or other establishments in which food is served for immediate human consumption or which is sold for sale or use in such establishments; or

(B) Processed and prepared primarily in a retail establishment, ready for human consumption, of the type described in paragraph (ii)(A) of this definition, and offered for sale to consumers but not for immediate human consumption in such establishment and which is not offered for sale outside such establishment.

Self-service food means restaurant-type food that is available at a salad bar, buffet line, cafeteria line, or similar self-service facility and that is served by the customers themselves. Self-service food also includes self-service beverages.

Standard menu item means a restaurant-type food that is routinely included on a menu or menu board or routinely offered as a self-service food or food on display.

Temporary menu item means a food that appears on a menu or menu board for less than a total of 60 days per calendar year. The 60 days includes the total of consecutive and non-consecutive days the item appears on the menu.

Variable menu item means a standard menu item that comes in different flavors, varieties, or combinations, and is listed as a single menu item.

(b) *Requirements for nutrition labeling for food sold in covered establishments*—(1) *Applicability*. (i) The labeling requirements in this paragraph (b) apply to standard menu items offered for sale in covered establishments.

(ii)(A) The labeling requirements in this paragraph (b) do not apply to foods that are not standard menu items, including:

(*1*) Items such as condiments that are for general use, including those placed on the table or on or behind the counter; daily specials; temporary

menu items; custom orders; food that is part of a customary market test; and

(*2*) Self-service food and food on display that is offered for sale for less than a total of 60 days per calendar year or fewer than 90 consecutive days in order to test consumer acceptance.

(B) The labeling requirements of paragraph (b)(2)(iii) of this section do not apply to alcoholic beverages that are foods on display and are not self-service foods.

(2) *Nutrition information.* (i) Except as provided by paragraph (b)(2)(i)(A)(*8*) of this section, the following must be provided on menus and menu boards:

(A) The number of calories contained in each standard menu item listed on the menu or menu board, as usually prepared and offered for sale. In the case of multiple-serving standard menu items, this means the calories declared must be for the whole menu item listed on the menu or menu board as usually prepared and offered for sale (*e.g.*, ''pizza pie: 1600 cal''); or per discrete serving unit as long as the discrete serving unit (*e.g.*, pizza slice) and total number of discrete serving units contained in the menu item are declared on the menu or menu board, and the menu item is usually prepared and offered for sale divided in discrete serving units (*e.g.*, ''pizza pie: 200 cal/slice, 8 slices''). The calories must be declared in the following manner:

(*1*) The number of calories must be listed adjacent to the name or the price of the associated standard menu item, in a type size no smaller than the type size of the name or the price of the associated standard menu item, whichever is smaller, in the same color, or a color at least as conspicuous as that used for the name of the associated standard menu item, and with the same contrasting background or a background at least as contrasting as that used for the name of the associated standard menu item.

(*2*) To the nearest 5-calorie increment up to and including 50 calories and to the nearest 10-calorie increment above 50 calories, except that amounts less than 5 calories may be expressed as zero.

(*3*) The term ''Calories'' or ''Cal'' must appear as a heading above a column listing the number of calories for each standard menu item or adjacent to the number of calories for each standard menu item. If the term ''Calories'' or ''Cal'' appears as a heading above a column of calorie declarations, the term must be in a type size no smaller than the smallest type size of the name or price of any menu item on that menu or menu board in the same color or a color at least as conspicuous as that used for that name or price and in the same contrasting background or a background at least as contrasting as that used for that name or price. If the term ''Calories'' or ''Cal'' appears adjacent to the number of calories for the standard menu item, the term ''Calories'' or ''Cal'' must appear in the same type size and in the same color and contrasting background as the number of calories.

(*4*) Additional requirements that apply to each individual variable menu item:

(*i*) When the menu or menu board lists flavors or varieties of an entire individual variable menu item (such as soft drinks, ice cream, doughnuts, dips, and chicken that can be grilled or fried), the calories must be declared separately for each listed flavor or variety. Where flavors or varieties have the same calorie amounts (after rounding in accordance with paragraph (b)(2)(i)(A)(*2*) of this section), the calorie declaration for such flavors or varieties can be listed as a single calorie declaration adjacent to the flavors or varieties, provided that the calorie declaration specifies that the calorie amount listed represents the calorie amounts for each individual flavor or variety.

(*ii*) When the menu or menu board does not list flavors or varieties for an entire individual variable menu item, and only includes a general description of the variable menu item (*e.g.*, ''soft drinks''), the calories must be declared for each option with a slash between the two calorie declarations where only two options are available (*e.g.*, ''150/250 calories'') or as a range in accordance with the requirements of paragraph (b)(2)(i)(A)(7) of this section where more than two options are available (*e.g.*, ''100–250 calories'').

(*iii*) When the menu or menu board describes flavors or varieties for only

part of an individual variable menu item (such as different types of cheese offered in a grilled cheese sandwich (*e.g.*, ''Grilled Cheese (Cheddar or Swiss)''), the calories must be declared for each option with a slash between the two calorie declarations where only two options are available (*e.g.*, ''450/500 calories'') or as a range in accordance with the requirements of paragraph (b)(2)(i)(A)(*7*) of this section where more than two options are available (*e.g.*, ''450–550 calories'').

(*5*) Additional requirements that apply to a variable menu item that is offered for sale with the option of adding toppings listed on the menu or menu board. When the menu or menu board lists toppings that can be added to a menu item (such as pizza or ice cream):

(*i*) The calories must be declared for the basic preparation of the menu item as listed (*e.g.*, ''small pizza pie,'' ''single scoop ice cream'').

(*ii*) The calories must be separately declared for each topping listed on the menu or menu board (*e.g.*, pepperoni, sausage, green peppers, onions on pizza; fudge, almonds, sprinkles on ice cream), specifying that the calories are added to the calories contained in the basic preparation of the menu item. Where toppings have the same calorie amounts (after rounding in accordance with paragraph (b)(2)(i)(A)(*2*) of this section), the calorie declaration for such toppings can be listed as a single calorie declaration adjacent to the toppings, provided that the calorie declaration specifies that the calorie amount listed represents the calorie amount for each individual topping.

(*iii*) The calories for the basic preparation of the menu item must be declared for each size of the menu item. The calories for each topping listed on the menu or menu board must be declared for each size of the menu item, or declared using a slash between the two calorie declarations for each topping where only two sizes of the menu item are available (*e.g.*, ''adds 150/250 cal'') or as a range for each topping in accordance with the requirements of paragraph (b)(2)(i)(A)(*7*) of this section where more than two sizes of the menu item are available (*e.g.*, ''adds 100–250 cal''). If a slash between two calorie declarations or a range of calorie declarations is used, the menu or menu board must indicate that the variation in calories for each topping arises from the size of the menu item to which the toppings are added.

(*iv*) If the amount of the topping included on the basic preparation of the menu item decreases based on the total number of toppings ordered for the menu item (such as is sometimes the case with pizza toppings), the calories for each topping must be declared as single values representing the calories for each topping when added to a one-topping menu item, specifying that the calorie declaration is for the topping when added to a one-topping menu item.

(*6*) Additional requirements that apply to a combination meal. Except as provided in paragraph (b)(2)(i)(A)(*6*)(*iv*) of this section:

(*i*) When the menu or menu board lists two options for menu items in a combination meal (*e.g.*, a sandwich with a side salad or chips), the calories must be declared for each option with a slash between the two calorie declarations (*e.g.*, ''350/450 calories'').

(*ii*) When the menu or menu board lists three or more options for menu items in a combination meal (*e.g.*, a sandwich with chips, a side salad, or fruit), the calories must be declared as a range in accordance with the requirements of paragraph (b)(2)(i)(A)(*7*) of this section (*e.g.*, ''350–500 calories'').

(*iii*) When the menu or menu board includes a choice to increase or decrease the size of a combination meal, the calorie difference must be declared for the increased or decreased size with a slash between two calorie declarations (*e.g.*, ''Adds 100/150 calories,'' ''Subtracts 100/150 calories'') if the menu or menu board lists two options for menu items in the combination meal, or as a range in accordance with the requirements of paragraph (b)(2)(i)(A)(*7*) of this section (*e.g.*, ''Adds 100–250 calories,'' ''Subtracts 100–250 calories'') if the menu or menu board lists three or more options for menu items in the combination meal.

(*iv*) Where the menu or menu board describes an opportunity for a consumer to combine standard menu items for a special price (*e.g.*,''Combine Any

Sandwich with Any Soup or Any Salad for $8.99''), and the calories for each standard menu item, including each size option as described in paragraph (b)(2)(i)(A)(6)(*iii*) of this section if applicable, available for the consumer to combine are declared elsewhere on the menu or menu board, the requirements of paragraphs (b)(2)(i)(A)(*6*)(*i*), (*ii*), and (*iii*) of this section do not apply.

(*7*) Additional format requirements for declaring calories for an individual variable menu item, a combination meal, and toppings as a range, if applicable. Calories declared as a range must be in the format ''xx–yy,'' where ''xx'' is the caloric content of the lowest calorie variety, flavor, or combination, and ''yy'' is the caloric content of the highest calorie variety, flavor, or combination.

(*8*) Exception for a variable menu item that has no clearly identifiable upper bound to the range of calories: If the variable menu item appears on the menu or menu board and is a self-service food or food on display, and there is no clearly identifiable upper bound to the range, *e.g.*, all-you-can-eat buffet, then the menu or menu board must include a statement, adjacent to the name or price of the item, referring customers to the self-service facility for calorie information, *e.g.*, ''See buffet for calorie declarations.'' This statement must appear in a type size no smaller than the type size of the name or price of the variable menu item, whichever is smaller, and in the same color or a color at least as conspicuous as that used for that name or price, with the same contrasting background or a background at least as contrasting as that used for that name or price.

(*9*) Additional requirements that apply to beverages that are not self-service. For beverages that are not self-service, calories must be declared based on the full volume of the cup served without ice, unless the covered establishment ordinarily dispenses and offers for sale a standard beverage fill (*i.e.*, a fixed amount that is less than the full volume of the cup per cup size) or dispenses a standard ice fill (*i.e.*, a fixed amount of ice per cup size). If the covered establishment ordinarily dispenses and offers for sale a standard beverage fill or dispenses a standard ice fill, the covered establishment must declare calories based on such standard beverage fill or standard ice fill.

(B) The following statement designed to enable consumers to understand, in the context of a total daily diet, the significance of the calorie information provided on menus and menu boards: ''2,000 calories a day is used for general nutrition advice, but calorie needs vary.'' For menus and menu boards targeted to children, the following options may be used as a substitute for or in addition to the succinct statement: ''1,200 to 1,400 calories a day is used for general nutrition advice for children ages 4 to 8 years, but calorie needs vary.'' or ''1,200 to 1,400 calories a day is used for general nutrition advice for children ages 4 to 8 years and 1,400 to 2,000 calories a day for children ages 9 to 13 years, but calorie needs vary.''

(*1*) This statement must be posted prominently and in a clear and conspicuous manner in a type size no smaller than the smallest type size of any calorie declaration appearing on the same menu or menu board and in the same color or in a color at least as conspicuous as that used for the calorie declarations and with the same contrasting background or a background at least as contrasting as that used for the calorie declarations.

(*2*) For menus, this statement must appear on the bottom of each page of the menu. On menu pages that also bear the statement required by paragraph (b)(2)(i)(C) of this section, this statement must appear immediately above, below, or beside the statement required by paragraph (b)(2)(i)(C) of this section.

(*3*) For menu boards, this statement must appear on the bottom of the menu board, immediately above, below, or beside the statement required by paragraph (b)(2)(i)(C) of this section.

(C) The following statement regarding the availability of the additional written nutrition information required in paragraph (b)(2)(ii) of this section must be on all forms of the menu or menu board: ''Additional nutrition information available upon request.''

(*1*) This statement must be posted prominently and in a clear and conspicuous manner in a type size no smaller than the smallest type size of any calorie declaration appearing on the same menu or menu board and in the same color or in a color at least as conspicuous as that used for the caloric declarations, and with the same contrasting background or a background at least as contrasting as that used for the caloric declarations.

(*2*) For menus, the statement must appear on the bottom of the first page with menu items immediately above, below, or beside the succinct statement required by paragraph (b)(2)(i)(B) of this section.

(*3*) For menu boards, the statement must appear on the bottom of the menu board immediately above, below, or beside the succinct statement required by paragraph (b)(2)(i)(B) of this section.

(ii) The following nutrition information for a standard menu item must be available in written form on the premises of the covered establishment and provided to the customer upon request. This nutrition information must be presented in the order listed and using the measurements listed, except as provided in paragraph (b)(2)(ii)(B) of this section. Rounding of these nutrients must be in compliance with § 101.9(c). The information must be presented in a clear and conspicuous manner, including using a color, type size, and contrasting background that render the information likely to be read and understood by the ordinary individual under customary conditions of purchase and use. Covered establishments may use the abbreviations allowed for Nutrition Facts for certain packaged foods in § 101.9(j)(13)(ii)(B):

(A)(*1*) Total calories (cal);

(*2*) Calories from fat (fat cal);

(*3*) Total fat (g);

(*4*) Saturated fat (g);

(*5*) *Tran*s fat (g);

(*6*) Cholesterol (mg);

(*7*) Sodium (mg);

(*8*) Total carbohydrate (g);

(*9*) Dietary fiber (g);

(*10*) Sugars (g); and

(*11*) Protein (g).

(B) If a standard menu item contains insignificant amounts of all the nutrients required to be disclosed in paragraph (b)(2)(ii)(A) of this section, the establishment is not required to include nutrition information regarding the standard menu item in the written form. However, if the covered establishment makes a nutrient content claim or health claim, the establishment is required to provide nutrition information on the nutrient that is the subject of the claim in accordance with § 101.10. For standard menu items that contain insignificant amounts of six or more of the required nutrients, the declaration of nutrition information required by paragraph (b)(2)(ii)(A) of this section may be presented in a simplified format.

(*1*) An insignificant amount is defined as that amount that allows a declaration of zero in nutrition labeling, except that for total carbohydrates, dietary fiber, and protein, it must be an amount that allows a declaration of ''less than one gram.''

(*2*) The simplified format must include information, in a column, list, or table, on the following nutrients:

(*i*) Total calories, total fat, total carbohydrates, protein, and sodium; and

(*ii*) Calories from fat, and any other nutrients identified in paragraph (b)(2)(ii)(A) of this section that are present in more than insignificant amounts.

(*3*) If the simplified format is used, the statement ''Not a significant source of ____'' (with the blank filled in with the names of the nutrients required to be declared in the written nutrient information and calories from fat that are present in insignificant amounts) must be included at the bottom of the list of nutrients.

(C) For variable menu items, the nutrition information listed in paragraph (b)(2)(ii)(A) of this section must be declared as follows for each size offered for sale:

(*1*) The nutrition information required in paragraph (b)(2)(ii)(A) of this section must be declared for the basic preparation of the item and, separately, for each topping, flavor, or variable component.

(*2*) Additional format requirements for toppings if the amount of the topping included on the basic preparation of the menu item decreases based on

the total number of toppings ordered for the menu item (such as is sometimes the case with pizza toppings). The nutrients for such topping must be declared as single values representing the nutrients for each topping when added to a one-topping menu item, specifying that the nutrient declaration is for the topping when added to a one-topping menu item.

(*3*) If the calories and other nutrients are the same for different flavors, varieties, and variable components of the combination meal, each variety, flavor, and variable component of the combination meal is not required to be listed separately. All items that have the same nutrient values could be listed together with the nutrient values listed only once.

(D) The written nutrition information required in paragraph (b)(2)(ii)(A) of this section may be provided on a counter card, sign, poster, handout, booklet, loose leaf binder, or electronic device such as a computer, or in a menu, or in any other form that similarly permits the written declaration of the required nutrient content information for all standard menu items. If the written nutrition information is not in a form that can be given to the customer upon request, it must be readily available in a manner and location on the premises that allows the customer/consumer to review the written nutrition information upon request.

(iii) The following must be provided for a standard menu item that is self-service or on display.

(A) Calories per displayed food item (*e.g.*, a bagel, a slice of pizza, or a muffin), or if the food is not offered for sale in a discrete unit, calories per serving (*e.g.*, scoop, cup), and the serving or discrete unit used to determine the calorie content (*e.g.*, ''per scoop'' or ''per muffin'') on either: A sign adjacent to and clearly associated with the corresponding food; (*e.g.*, ''150 calories per scoop); a sign attached to a sneeze guard with the calorie declaration and the serving or unit used to determine the calorie content above each specific food so that the consumer can clearly associate the calorie declaration with the food, except that if it is not clear to which food the calorie declaration and serving or unit refers, then the sign must also include the name of the food, *e.g.*, ''Broccoli and cheese casserole—200 calories per scoop''; or a single sign or placard listing the calorie declaration for several food items along with the names of the food items, so long as the sign or placard is located where a consumer can view the name, calorie declaration, and serving or unit of a particular item while selecting that item.

(*1*) For purposes of paragraph (b)(2)(iii)(A) of this section, ''per displayed food item''; means per each discrete unit offered for sale, for example, a bagel, a slice of pizza, or a muffin.

(*2*) For purposes of paragraph (b)(2)(iii)(A) of this section, ''per serving'' means, for each food:

(*i*) Per serving instrument used to dispense the food offered for sale, provided that the serving instrument dispenses a uniform amount of the food (*e.g.*, a scoop or ladle);

(*ii*) If a serving instrument that dispenses a uniform amount of food is not used to dispense the food, per each common household measure (*e.g.*, cup or tablespoon) offered for sale or per unit of weight offered for sale, *e.g.*, per quarter pound or per 4 ounces; or

(*iii*) Per total number of fluid ounces in the cup in which a self-service beverage is served and, if applicable, the description of the cup size (*e.g.*, ''140 calories per 12 fluid ounces (small)'').

(*3*) The calories must be declared in the following manner:

(*i*) To the nearest 5-calorie increment up to and including 50 calories and to the nearest 10-calorie increment above 50 calories except that amounts less than 5 calories may be expressed as zero.

(*ii*) If the calorie declaration is provided on a sign with the food's name, price, or both, the calorie declaration, accompanied by the term ''Calories'' or ''Cal'' and the amount of the serving or displayed food item on which the calories declaration is based must be in a type size no smaller than the type size of the name or price of the menu item whichever is smaller, in the same color, or a color that is at least as conspicuous as that used for that name or

price, using the same contrasting background or a background at least as contrasting as that used for that name or price. If the calorie declaration is provided on a sign that does not include the food's name, price, or both, the calorie declaration, accompanied by the term ''Calories'' or ''Cal'' and the amount of the serving or displayed food item on which the calorie declaration is based must be clear and conspicuous.

(*iii*) For self-service beverages, calorie declarations must be accompanied by the term ''fluid ounces'' and, if applicable, the description of the cup size (*e.g.*, ''small,'' ''medium'').

(B) For food that is self-service or on display and is identified by an individual sign adjacent to the food itself where such sign meets the definition of a menu or menu board under paragraph (a) of this section, the statement required by paragraph (b)(2)(i)(B) of this section and the statement required by paragraph (b)(2)(i)(C) of this section. These two statements may appear on the sign adjacent to the food itself; on a separate, larger sign, in close proximity to the food that can be easily read as the consumer is making order selections; or on a large menu board that can be easily read as the consumer is viewing the food.

(C) The nutrition information in written form required by paragraph (b)(2)(ii) of this section, except for packaged food insofar as it bears nutrition labeling information required by and in accordance with paragraph (b)(2)(ii) of this section and the packaged food, including its label, can be examined by a consumer before purchasing the food.

(c) *Determination of nutrient content.* (1) A covered establishment must have a reasonable basis for its nutrient declarations. Nutrient values may be determined by using nutrient databases (with or without computer software programs), cookbooks, laboratory analyses, or other reasonable means, including the use of Nutrition Facts on labels on packaged foods that comply with the nutrition labeling requirements of section 403(q)(1) of the Federal Food, Drug, and Cosmetic Act and § 101.9, FDA nutrient values for raw fruits and vegetables in Appendix C of this part, or FDA nutrient values for cooked fish in Appendix D of this part.

(2) Nutrient declarations for standard menu items must be accurate and consistent with the specific basis used to determine nutrient values. A covered establishment must take reasonable steps to ensure that the method of preparation (*e.g.*, types and amounts of ingredients, cooking temperatures) and amount of a standard menu item offered for sale adhere to the factors on which its nutrient values were determined.

(3) A covered establishment must provide to FDA, within a reasonable period of time upon request, information substantiating nutrient values including the method and data used to derive these nutrient values. This information must include the following:

(i) For nutrient databases:

(A) The name and version (including the date of the version) of the database, and, as applicable, the name of the applicable software company and any Web site address for the database. The name and version of a database would include the name and version of the computer software, if applicable;

(B) The recipe or formula used as a basis for the nutrient declarations;

(C)(*1*) Information on:

(*i*) The amount of each nutrient that the specified amount of each ingredient identified in the recipe contributes to the menu item; and

(*ii*) How the database was used including calculations or operations (*e.g.*, worksheets or computer printouts) to determine the nutrient values for the standard menu items;

(*2*) If the information in paragraph (c)(3)(i)(C)(*1*) of this section is not available, certification attesting that the database will provide accurate results when used appropriately and that the database was used in accordance with its instructions;

(D) A detailed listing (*e.g.*, printout) of the nutrient values determined for each standard menu item.

(E) Any other information pertinent to the final nutrient values of the standard menu item (*e.g.*, information about what might cause slight variations in the nutrient profile such as moisture variations);

(F) A statement signed and dated by a responsible individual, employed at the covered establishment or its corporate headquarters or parent entity, who can certify that the information contained in the nutrient analysis is complete and accurate; and

(G) A statement signed and dated by a responsible individual employed at the covered establishment certifying that the covered establishment has taken reasonable steps to ensure that the method of preparation (*e.g.*, types and amounts of ingredients in the recipe, cooking temperatures) and amount of a standard menu item offered for sale adhere to the factors on which its nutrient values were determined.

(ii) For published cookbooks that contain nutritional information for recipes in the cookbook:

(A) The name, author, and publisher of the cookbook used;

(B) If available, information provided by the cookbook or from the author or publisher about how the nutrition information for the recipes was obtained;

(C) A copy of the recipe used to prepare the standard menu item and a copy of the nutrition information for that standard menu item as provided by the cookbook; and

(D) A statement signed and dated by a responsible individual employed at the covered establishment certifying that that the covered establishment has taken reasonable steps to ensure that the method of preparation (*e.g.*, types and amounts of ingredients in the recipe, cooking temperatures) and amount of a standard menu item offered for sale adhere to the factors on which its nutrient values were determined. (Recipes may be divided as necessary to accommodate differences in the portion size derived from the recipe and that are served as the standard menu item but no changes may be made to the proportion of ingredients used.)

(iii) For laboratory analyses:

(A) A copy of the recipe for the standard menu item used for the nutrient analysis;

(B) The name and address of the laboratory performing the analysis;

(C) Copies of analytical worksheets, including the analytical method, used to determine and verify nutrition information;

(D) A statement signed and dated by a responsible individual, employed at the covered establishment or its corporate headquarters or parent entity, who can certify that the information contained in the nutrient analysis is complete and accurate; and

(E) A statement signed and dated by a responsible individual employed at the covered establishment certifying that the covered establishment has taken reasonable steps to ensure that the method of preparation (*e.g.*, types and amounts of ingredients in the recipe, cooking temperatures) and amount of a standard menu item offered for sale adhere to the factors on which its nutrient values were determined.

(iv) For nutrition information provided by other reasonable means:

(A) A detailed description of the means used to determine the nutrition information;

(B) A recipe or formula used as a basis for the nutrient determination;

(C) Any data derived in determining the nutrient values for the standard menu item, *e.g.*, nutrition information about the ingredients used with the source of the nutrient information;

(D) A statement signed and dated by a responsible individual, employed at the covered establishment or its corporate headquarters or parent entity, who can certify that the information contained in the nutrient analysis is complete and accurate; and

(E) A statement signed and dated by a responsible individual employed at the covered establishment certifying that the covered establishment has taken reasonable steps to ensure that the method of preparation (*e.g.*, types and amounts of ingredients in the recipe, cooking temperatures) and amount of a standard menu item offered for sale adhere to the factors on which its nutrient values were determined.

(d) *Voluntary registration to be subject to the menu labeling requirements*—(1) *Applicability*. A restaurant or similar retail food establishment that is not part of a chain with 20 or more locations doing business under the same

name and offering for sale substantially the same menu items may voluntarily register to be subject to the requirements established in this section. Restaurants and similar retail food establishments that voluntarily register will no longer be subject to non-identical State or local nutrition labeling requirements.

(2) *Who may register?* The authorized official of a restaurant or similar retail food establishment as defined in paragraph (a) of this section, which is not otherwise subject to paragraph (b) of this section, may register with FDA.

(3) *What information is required?* Authorized officials for restaurants and similar retail food establishments must provide FDA with the following information on Form FDA 3757:

(i) The contact information (including name, address, phone number, and email address) for the authorized official;

(ii) The contact information (including name, address, phone number, and email address) of each restaurant or similar retail food establishment being registered, as well as the name and contact information for an official onsite, such as the owner or manager, for each specific restaurant or similar retail food establishment;

(iii) All trade names the restaurant or similar retail food establishment uses;

(iv) Preferred mailing address (if different from location address for each establishment) for purposes of receiving correspondence; and

(v) Certification that the information submitted is true and accurate, that the person submitting it is authorized to do so, and that each registered restaurant or similar retail food establishment will be subject to the requirements of section 403(q)(5)(H) of the Federal Food, Drug, and Cosmetic Act and this section.

(4) *How to register*. Authorized officials of restaurants and similar retail food establishments who elect to be subject to requirements in section 403(q)(5)(H) of the Federal Food, Drug, and Cosmetic Act can register by visiting *http://www.fda.gov/food/ingredientspackaginglabeling/labelingnutrition/ucm217762.htm*. FDA has created a form (Form 3757) that contains fields requesting the information in paragraph (d)(3) of this section and made the form available at this Web site. Registrants must use this form to ensure that complete information is submitted.

(i) Information should be submitted by email by typing complete information into the form (PDF), saving it on the registrant's computer, and sending it by email to *menulawregistration@fda.hhs.gov*.

(ii) *If email is not available, the registrant* can either fill in the form (PDF) and print it out (or print out the blank PDF and fill in the information by hand or typewriter), and either fax the completed form to 301–436–2804 or mail it to FDA, CFSAN Menu and Vending Machine Registration, White Oak Building 22, Rm. 0209, 10903 New Hampshire Ave., Silver Spring, MD 20993.

(5) *When to renew the registration*. To keep the establishment's registration active, the authorized official of the restaurant or similar retail food establishment must register every other year within 60 days prior to the expiration of the establishment's current registration with FDA. Registration will automatically expire if not renewed.

(e) *Signatures*. Signatures obtained under paragraph (d) of this section that meet the definition of electronic signatures in § 11.3(b)(7) of this chapter are exempt from the requirements of part 11 of this chapter.

(f) *Misbranding*. A standard menu item offered for sale in a covered establishment shall be deemed misbranded under sections 201(n), 403(a), 403(f) and/or 403(q) of the Federal Food, Drug, and Cosmetic Act if its label or labeling is not in conformity with paragraph (b) or (c) of this section.

[79 FR 71253, Dec. 1, 2014]

§ 101.12 Reference amounts customarily consumed per eating occasion.

(a) The general principles and factors that the Food and Drug Administration (FDA) considered in arriving at the reference amounts customarily consumed per eating occasion (reference amounts) which are set forth in paragraph (b) of this section, are that:

(1) FDA calculated the reference amounts for persons 4 years of age or

older to reflect the amount of food customarily consumed per eating occasion by persons in this population group. These reference amounts are based on data set forth in appropriate national food consumption surveys.

(2) FDA calculated the reference amounts for an infant or child under 4 years of age to reflect the amount of food customarily consumed per eating occasion by infants up to 12 months of age or by children 1 through 3 years of age, respectively. These reference amounts are based on data set forth in appropriate national food consumption surveys. Such reference amounts are to be used only when the food is specially formulated or processed for use by an infant or by a child under 4 years of age.

(3) An appropriate national food consumption survey includes a large sample size representative of the demographic and socioeconomic characteristics of the relevant population group and must be based on consumption data under actual conditions of use.

(4) To determine the amount of food customarily consumed per eating occasion, FDA considered the mean, median, and mode of the consumed amount per eating occasion.

(5) When survey data were insufficient, FDA took various other sources of information on serving sizes of food into consideration. These other sources of information included:

(i) Serving sizes used in dietary guidance recommendations or recommended by other authoritative systems or organizations;

(ii) Serving sizes recommended in comments;

(iii) Serving sizes used by manufacturers and grocers; and

(iv) Serving sizes used by other countries.

(6) Because they reflect the amount customarily consumed, the reference amount and, in turn, the serving size declared on the product label are based on only the edible portion of food, and not bone, seed, shell, or other inedible components.

(7) The reference amount is based on the major intended use of the food (e.g., milk as a beverage and not as an addition to cereal).

(8) The reference amounts for products that are consumed as an ingredient of other foods, but that may also be consumed in the form in which they are purchased (e.g., butter), are based on use in the form purchased.

(9) FDA sought to ensure that foods that have similar dietary usage, product characteristics, and customarily consumed amounts have a uniform reference amount.

(b) The following reference amounts shall be used as the basis for determining serving sizes for specific products:

TABLE 1—REFERENCE AMOUNTS CUSTOMARILY CONSUMED PER EATING OCCASION: FOODS FOR INFANTS AND YOUNG CHILDREN 1 THROUGH 3 YEARS OF AGE [1 2 3]

Product category	Reference amount	Label statement [4]
Cereals, dry instant	15 g	__cup (__g)
Cereals, prepared, ready-to-serve.	110 g	__cup(s) (__g)
Other cereal and grain products, dry ready-to-eat, e.g., ready-to-eat cereals, cookies, teething biscuits, and toasts.	7 g for infants and 20 g for young children (1 through 3 years of age) for ready-to-eat cereals; 7 g for all others.	__cup(s) (__g) for ready-to-eat cereals; piece(s) (__g) for others
Dinners, deserts, fruits, vegetables or soups, dry mix.	15 g	__tbsp(s) (__g); __cup(s) (__g)
Dinners, desserts, fruits, vegetables or soups, ready-to-serve, junior type.	110 g	__cup(s) (__g); cup(s) (__mL)
Dinners, desserts, fruits, vegetables or soups, ready-to-serve, strained type.	110 g	__cup(s) (__g); cup(s) (__mL)

TABLE 1—REFERENCE AMOUNTS CUSTOMARILY CONSUMED PER EATING OCCASION: FOODS FOR INFANTS AND YOUNG CHILDREN 1 THROUGH 3 YEARS OF AGE [1 2 3]—Continued

Product category	Reference amount	Label statement [4]
Dinners, stews or soups for young children, ready-to-serve.	170 g	__cup(s) (__g); cup(s) (__mL)
Fruits for young children, ready-to-serve.	125 g	__cup(s) (__g)
Vegetables for young children, ready-to-serve.	70 g	__cup(s) (__g)
Eggs/egg yolks, ready-to serve	55 g	__cup(s) (__g)
Juices all varieties	120 mL	4 fl oz (120 mL)

[1] These values represent the amount of food customarily consumed per eating occasion and were primarily derived from the 1977–1978 and the 1987–1988 Nationwide Food Consumption Surveys conducted by the U.S. Department of Agriculture. We further considered data from the National Health and Nutrition Examination Survey, 2003–2004, 2005–2006, and 2007–2008 conducted by the Centers for Disease Control and Prevention, in the U.S. Department of Health and Human Services.

[2] Unless otherwise noted in the reference amount column, the reference amounts are for the ready-to-serve or almost ready-to-serve form of the product (*e.g.,* heat and serve, brown and serve). If not listed separately, the reference amount for the unprepared form (*e.g.,* dry mixes, concentrates, dough, batter, fresh and frozen pasta) is the amount required to make the reference amount of the prepared form. Prepared means prepared for consumption (*e.g.,* cooked).

[3] Manufacturers are required to convert the reference amount to the label serving size in a household measure most appropriate to their specific product using the procedures in 21 CFR 101.9(b).

[4] The label statements are meant to provide examples of serving size statements that may be used on the label, but the specific wording may be changed as appropriate for individual products. The term ''piece'' is used as a generic description of a discrete unit. Manufacturers should use the description of a unit that is most appropriate for the specific product (*e.g.,* sandwich for sandwiches, cookie for cookies, and bar for frozen novelties).

TABLE 2—REFERENCE AMOUNTS CUSTOMARILY CONSUMED PER EATING OCCASION: GENERAL FOOD SUPPLY [1 2 3]

Product category	Reference amount	Label statement [4]
Bakery Products:		
Bagels, toaster pastries, muffins (excluding English muffins).	110 g	__piece(s) (__g)
Biscuits, croissants, tortillas, soft bread sticks, soft pretzels, corn bread, hush puppies, scones, crumpets, English muffins.	55 g	__piece(s) (__g)
Breads (excluding sweet quick type), rolls.	50 g	__piece(s) (__g) for sliced bread and distinct pieces (e.g., rolls); 2 oz (56 g/__inch slice) for unsliced bread
Bread sticks—see crackers.		
Toaster pastries—see bagels, toaster pastries, muffins (excluding English muffins).		
Brownies	40 g	__piece(s) (__g) for distinct pieces; fractional slice (__g) for bulk

TABLE 2—REFERENCE AMOUNTS CUSTOMARILY CONSUMED PER EATING OCCASION: GENERAL FOOD SUPPLY [1 2 3]—Continued

Product category	Reference amount	Label statement [4]
Cakes, heavyweight (cheese cake; pineapple upside-down cake; fruit, nut, and vegetable cakes with more than or equal to 35 percent of the finished weight as fruit, nuts, or vegetables or any of these combinations) [5].	125 g	__piece(s) (__g) for distinct pieces (e.g., sliced or individually packaged products); __fractional slice (__g) for large discrete units
Cakes, mediumweight (chemically leavened cake with or without icing or filling except those classified as light weight cake; fruit, nut, and vegetable cake with less than 35 percent of the finished weight as fruit, nuts, or vegetables or any of these combinations; light weight cake with icing; Boston cream pie; cupcake; eclair; cream puff) [6].	80 g	__piece(s) (__g) for distinct pieces (e.g., cupcake); __fractional slice (__g) for large discrete units
Cakes, lightweight (angel food, chiffon, or sponge cake without icing or filling) [7].	55 g	__piece(s) (__g) for distinct pieces (e.g., sliced or individually packaged products); __fractional slice (__g) for large discrete units
Coffee cakes, crumb cakes, doughnuts, Danish, sweet rolls, sweet quick type breads.	55 g	__piece(s) (__g) for sliced bread and distinct pieces (e.g., doughnut); 2 oz (56 g/visual unit of measure) for bulk products (e.g., unsliced bread)
Cookies	30 g	__piece(s) (__g)
Crackers that are usually not used as snack, melba toast, hard bread sticks, ice cream cones [8].	15 g	__piece(s) (__g)
Crackers that are usually used as snacks.	30 g	__piece(s) (__g)
Croutons	7 g	__tbsp(s) (__g); __cup(s) (__g); __piece(s) (__g) for large pieces
Eggroll, dumpling, wonton, or potsticker wrappers.	20 g	__sheet (__g); wrapper (__g)
French toast, crepes, pancakes, variety mixes.	110 g prepaed for French toast, crepes, and pancakes; 40 g dry mix for variety mixes.	__piece(s) (__g); __cup(s) (__g) for dry mix
Grain-based bars with or without filling or coating, e.g., breakfast bars, granola bars, rice cereal bars.	40 g	__piece(s) (__g)
Ice cream cones—see crackers.		

TABLE 2—REFERENCE AMOUNTS CUSTOMARILY CONSUMED PER EATING OCCASION: GENERAL FOOD SUPPLY [1 2 3]—Continued

Product category	Reference amount	Label statement [4]
Pies, cobblers, fruit crisps, turnovers, other pastries.	125 g	__piece(s) (__g) for distinct pieces; __fractional slice (__g) for large discrete units
Pie crust, pie shells, pastry sheets, (e.g., phyllo, puff pastry sheets).	the allowable declaration closest to an 8 square inch surface area.	__fractional slice(s) (__g) for large discrete units; __shells (__g); __fractional __sheet(s) (__g) for distinct pieces (e.g., Pastry sheet).
Pizza crust	55 g	__fractional slice (__g)
Taco shells, hard	30 g	__shell(s) (__g)
Waffles	85 g	__piece(s) (__g)
Beverages:		
Carbonated and noncarbonated beverages, wine coolers, water.	360 mL	12 fl oz (360 mL)
Coffee or tea, flavored and sweetened.	360 mL prepared	12 fl oz (360 mL)
Cereals and Other Grain Products:		
Breakfast cereals (hot cereal type), hominy grits.	1 cup prepared; 40 g plain dry cereal; 55 g flavored, sweetened cereal.	__cup(s) (__g)
Breakfast cereals, ready-to-eat, weighing less than 20 g per cup, e.g., plain puffed cereal grains.	15 g	__cup(s) (__g)
Breakfast cereals, ready-to-eat, weighing 20 g or more but less than 43 g per cup; high fiber cereals containing 28 g or more of fiber per 100 g.	40 g	__cup(s) (__g)
Breakfast cereals, ready-to-eat, weighing 43 g or more per cup; biscuit types.	60 g	__piece(s) (__g) for large distinct pieces (e.g., biscuit type); __cup(s) (__g) for all others
Bran or wheat germ	15 g	__tbsp(s) (__g); __cup(s) (__g)
Flours or cornmeal	30 g	__tbsp(s) (__g); __cup(s) (__g)
Grains, e.g., rice, barley, plain.	140 g prepared; 45 g dry	__cup(s) (__g)
Pastas, plain	140 g prepared; 55 g dry	__cup(s) (__g); __piece(s) (__g) for large pieces (e.g., large shells or lasagna noodles) or 2 oz (56 g/visual unit of measure) for dry bulk products (e.g., spaghetti)
Pastas, dry, ready-to-eat, e.g., fried canned chow mein noodles.	25 g	__cup(s) (__g)
Starches, e.g., cornstarch, potato starch, tapioca, etc.	10 g	__tbsp (__g)
Stuffing	100 g	__cup(s) (__g)
Dairy Products and Substitutes:		
Cheese, cottage	110 g	__cup (__g)

TABLE 2—REFERENCE AMOUNTS CUSTOMARILY CONSUMED PER EATING OCCASION: GENERAL FOOD SUPPLY [1 2 3]—Continued

Product category	Reference amount	Label statement [4]
Cheese used primarily as ingredients, e.g., dry cottage cheese, ricotta cheese.	55 g	__cup (__g)
Cheese, grated hard, e.g., Parmesan, Romano.	5 g	__tbsp (__g)
Cheese, all others except those listed as separate categories—includes cream cheese and cheese spread.	30 g	__piece(s) (__g) for distinct pieces; __tbsp(s) (__g) for cream cheese and cheese spread; 1 oz (28 g/visual unit of measure) for bulk
Cheese sauce—see sauce category.		
Cream or cream substitutes, fluid.	15 mL	1 tbsp (15 mL)
Cream or cream substitutes, powder.	2 g	__tsp (__g)
Cream, half & half	30 mL	2 tbsp (30 mL)
Eggnog	120 mL	½ cup (120 mL); 4 fl oz (120 mL)
Milk, condensed, undiluted	30 mL	2 tbsp (30 mL)
Milk, evaporated, undiluted.	30 mL	2 tbsp (30 mL)
Milk, milk-substitute beverages, milk-based drinks, e.g., instant breakfast, meal replacement, cocoa, soy beverage.	240 mL	1 cup (240 mL); 8 fl oz (240 mL)
Shakes or shake substitutes, e.g., dairy shake mixes, fruit frost mixes.	240 mL	1 cup (240 mL); 8 fl oz (240 mL)
Sour cream	30 g	__tbsp (__g)
Yogurt	170 g	__cup (__g)
Desserts:		
Ice cream, frozen yogurt, sherbet, frozen flavored and sweetened ice and pops, frozen fruit juices: all types bulk and novelties (e.g., bars, sandwiches, cones, cups).	⅔ cup—includes the volume for coatings and wafers.	⅔ cup (__g), __piece(s) (__g) for individually wrapped or packaged products
Sundae	1 cup	1 cup (__g)
Custards, gelatin, or pudding.	½ cup prepared; amount to make ½ cup prepared when dry.	__piece(s) (__g) for distinct unit (e.g., individually packaged products); ½ cup (__g) for bulk
Dessert Toppings and Fillings:		
Cake frostings or icings	2 tbsp	__tbsp(s) (__g)
Other dessert toppings, e.g., fruits, syrups, spreads, marshmallow cream, nuts, dairy and non-dairy whipped toppings.	2 tbsp	2 tbsp (__g); 2 tbsp (30 mL)
Pie fillings	85 g	__cup(s) (__g)
Egg and Egg Substitutes:		
Egg mixtures, e.g., egg foo young, scrambled eggs, omelets.	110 g	__piece(s) (__g) for discrete pieces; __cup(s) (__g)

TABLE 2—REFERENCE AMOUNTS CUSTOMARILY CONSUMED PER EATING OCCASION: GENERAL FOOD SUPPLY [1 2 3]—Continued

Product category	Reference amount	Label statement [4]
Eggs (all sizes) [8]	50 g	1 large, medium, etc. (__g)
Egg whites, sugared eggs, sugared egg yolks, and egg substitutes (fresh, frozen, dried).	An amount to make 1 large (50 g) egg.	__cup(s) (__g); __cup(s) (__mL)
Fats and Oils:		
Butter, margarine, oil, shortening.	1 tbsp	1 tbsp (__g); 1 tbsp (15 mL)
Butter replacement, powder.	2 g	__tsp(s) (__g)
Dressings for salads	30 g	__tbsp (__g); __tbsp (__mL)
Mayonnaise, sandwich spreads, mayonnaise-type dressings.	15 g	__tbsp (__g)
Spray types	0.25 g	About __seconds spray (__g)
Fish, Shellfish, Game Meats,[9] and Meat or Poultry Substitutes:		
Bacon substitutes, canned anchovies,[10] anchovy pastes, caviar.	15 g	__piece(s) (__g) for discrete pieces; __tbsp(s) (__g) for others
Dried, e.g., jerky	30 g	__piece(s) (__g)
Entrees with sauce, e.g., fish with cream sauce, shrimp with lobster sauce.	140 g cooked	__cup(s) (__g); 5 oz (140 g/visual unit of measure) if not measurable by cup
Entrees without sauce, e.g., plain or fried fish and shellfish, fish and shellfish cake.	85 g cooked; 110 g uncooked [11].	__piece(s) (__g) for discrete pieces; __cup(s) (__g); __oz (__g/visual unit of measure) if not measurable by cup [12]
Fish, shellfish, or game meat [9], canned [10].	85 g	__piece(s) (__g) for discrete pieces; __cup(s) (__g); 3 oz (85 g/__cup) for products that are difficult to measure the g weight of cup measure (e.g., tuna); 3 oz (85 g/__pieces) for products that naturally vary in size (e.g., sardines)
Substitute for luncheon meat, meat spreads, Canadian bacon, sausages, frankfurters, and seafood.	55 g	__piece(s) (__g) for distinct pieces (e.g., slices, links); __cup(s) (__g); 2 oz (56 g/visual unit of measure) for nondiscrete bulk product
Smoked or pickled fish,[10] shellfish, or game meat [9]; fish or shellfish spread.	55 g	__piece(s) (__g) for distinct pieces (e.g., slices, links) or __cup(s) (__g); 2 oz (56 g/visual unit of measure) for nondiscrete bulk product
Substitutes for bacon bits—see Miscellaneous.		
Fruits and Fruit Juices:		
Candied or pickled [10]	30 g	__piece(s) (__g)
Dehydrated fruits—see snack category.		
Dried	40 g	__piece(s) (__g) for large pieces (e.g., dates, figs, prunes); __cup(s) (__g) for small pieces (e.g., raisins)

TABLE 2—REFERENCE AMOUNTS CUSTOMARILY CONSUMED PER EATING OCCASION: GENERAL FOOD SUPPLY [1 2 3]—Continued

Product category	Reference amount	Label statement [4]
Fruits for garnish or flavor, e.g., maraschino cherries [10].	4 g	1 cherry (__g); __piece(s) (__g)
Fruit relishes, e.g., cranberry sauce, cranberry relish.	70 g	__cup(s) (__g)
Fruits used primarily as ingredients, avocado.	50 g	See footnote [12]
Fruits used primarily as ingredients, others (cranberries, lemon, lime).	50 g	__piece(s) (__g) for large fruits; __cup(s) (__g) for small fruits measurable by cup[12]
Watermelon	280 g	See footnote [12]
All other fruits (except those listed as separate categories), fresh, canned or frozen.	140 g	__piece(s) (__g) for large pieces (e.g., strawberries, prunes, apricots, etc.); __cup(s) (__g) for small pieces (e.g., blueberries, raspberries, etc.) [12]
Juices, nectars, fruit drinks	240 mL	8 fl oz (240 mL)
Juices used as ingredients, e.g., lemon juice, lime juice.	5 mL	1 tsp (5 mL)
Legumes:		
Tofu,[10] tempeh	85 g	__piece(s) (__g) for discrete pieces; 3 oz (84 g/visual unit of measure) for bulk products
Beans, plain or in sauce	130 g for beans in sauce or canned in liquid and refried beans prepared; 90 g for others prepared; 35 g dry.	__cup (__g)
Miscellaneous:		
Baking powder, baking soda, pectin.	0.6 g	__tsp (__g)
Baking decorations, e.g., colored sugars and sprinkles for cookies, cake decorations.	1 tsp or 4 g if not measurable by teaspoon.	__piece(s) (__g) for discrete pieces; 1 tsp (__g)
Batter mixes, bread crumbs.	30 g	__tbsp(s) (__g); __cup(s) (__g)
Chewing gum [8]	3 g	__piece(s) (__g)
Cocoa powder, carob powder, unsweetened.	1 tbsp	1 tbsp (__g)
Cooking wine	30 mL	2 tbsp (30 mL)
Dietary supplements	The maximum amount recommended, as appropriate, on the label for consumption per eating occasion or, in the absence of recommendations, 1 unit, e.g., tablet, capsule, packet, teaspoonful, etc.	__tablet(s), __capsules(s), __packet(s), __tsp(s) (__g), etc.
Meat, poultry, and fish coating mixes, dry; seasoning mixes, dry, e.g., chili seasoning mixes, pasta salad seasoning mixes.	Amount to make one reference amount of final dish.	__tsp(s) (__g); __tbsp(s) (__g)

TABLE 2—REFERENCE AMOUNTS CUSTOMARILY CONSUMED PER EATING OCCASION: GENERAL FOOD SUPPLY [1 2 3]—Continued

Product category	Reference amount	Label statement [4]
Milk, milk substitute, and fruit juice concentrates (without alcohol) (e.g., drink mixers, frozen fruit juice concentrate, sweetened cocoa powder).	Amount to make 240 mL drink (without ice).	__fl oz (__mL); __tsp (__ g); tbsp (__g)
Drink mixes (without alcohol): All other types (e.g., flavored syrups and powdered drink mixes).	Amount to make 360 mL drink (without ice).	__fl oz (__mL); __tsp (__g); __tbsp (__g)
Salad and potato toppers, e.g., salad crunchies, salad crispins, substitutes for bacon bits.	7 g	__tbsp(s) (__g)
Salt, salt substitutes, seasoning salts (e.g., garlic salt).	¼ tsp	¼ tsp (__g); __piece(s) (__g) for discrete pieces (e.g., individually packaged products)
Seasoning oils and seasoning sauces (e.g., coconut concentrate, sesame oil, almond oil, chili oil, coconut oil, walnut oil).	1 tbsp	1 tbsp (__g)
Seasoning pastes (e.g., garlic paste, ginger paste, curry paste, chili paste, miso paste), fresh or frozen.	1 tsp	1 tsp (__g)
Spices, herbs (other than dietary supplements).	¼ tsp or 0.5 g if not measurable by teaspoon.	¼ tsp (__g); __piece(s) (__g) if not measurable by teaspoons (e.g., bay leaf)
Mixed Dishes:		
Appetizers, hors d'oeuvres, mini mixed dishes, e.g., mini bagel pizzas, breaded mozzarella sticks, egg rolls, dumplings, potstickers, wontons, mini quesadillas, mini quiches, mini sandwiches, mini pizza rolls, potato skins.	85 g, add 35 g for products with gravy or sauce topping.	__piece(s) (__g)
Measurable with cup, e.g., casseroles, hash, macaroni and cheese, pot pies, spaghetti with sauce, stews, etc.	1 cup	1 cup (__g)
Not measurable with cup, e.g., burritos, enchiladas, pizza, pizza rolls, quiche, all types of sandwiches.	140 g, add 55 g for products with gravy or sauce topping, e.g., enchilada with cheese sauce, crepe with white sauce [13].	__piece(s) (__g) for discrete pieces; __fractional slice (__g) for large discrete units
Nuts and Seeds:		

TABLE 2—REFERENCE AMOUNTS CUSTOMARILY CONSUMED PER EATING OCCASION: GENERAL FOOD SUPPLY [1 2 3]—Continued

Product category	Reference amount	Label statement [4]
Nuts, seeds and mixtures, all types: Sliced, chopped, slivered, and whole.	30 g	__piece(s) (__g) for large pieces (e.g., unshelled nuts); __tbsp(s) (__g); __cup(s) (__g) for small pieces (e.g., peanuts, sunflower seeds)
Nut and seed butters, pastes, or creams.	2 tbsp	2 tbsp (__g)
Coconut, nut and seed flours.	15 g	__tbsp(s) (__g); __cup (__g)
Potatoes and Sweet Potatoes/Yams:		
French fries, hash browns, skins, or pancakes.	70 g prepared; 85 g for frozen unprepared French fries.	__piece(s) (__g) for large distinct pieces (e.g., patties, skins); 2.5 oz (70 g/__pieces) for prepared fries; 3 oz (84 g/__pieces) for unprepared fries
Mashed, candied, stuffed or with sauce.	140 g	__piece(s) (__g) for discrete pieces (e.g., stuffed potato); __cup(s) (__g)
Plain, fresh, canned, or frozen.	110 g for fresh or frozen; 125 g for vacuum packed; 160 g for canned in liquid.	__piece(s) (__g) for discrete pieces; __cup(s) (__g) for sliced or chopped products
Salads:		
Gelatin salad	120 g	__cup (__g)
Pasta or potato salad	140 g	__cup(s) (__g)
All other salads, e.g., egg, fish, shellfish, bean, fruit, or vegetable salads.	100 g	__cup(s) (__g)
Sauces, Dips, Gravies, and Condiments:		
Barbecue sauce, hollandaise sauce, tartar sauce, tomato chili sauce, other sauces for dipping (e.g., mustard sauce, sweet and sour sauce), all dips (e.g., bean dips, dairy-based dips, salsa).	2 tbsp	2 tbsp (__g); 2 tbsp (30 mL)
Major main entree sauces, e.g., spaghetti sauce.	125 g	__cup (__g); __cup (__mL)
Minor main entree sauces (e.g., pizza sauce, pesto sauce, Alfredo sauce), other sauces used as toppings (e.g., gravy, white sauce, cheese sauce), cocktail sauce.	¼ cup	¼ cup (__g); ¼ cup (60 mL)
Major condiments, e.g., catsup, steak sauce, soy sauce, vinegar, teriyaki sauce, marinades.	1 tbsp	1 tbsp (__g); 1 tbsp (15 mL)
Minor condiments, e.g., horseradish, hot sauces, mustards, Worcestershire sauce.	1 tsp	1 tsp (__g); 1 tsp (5 mL)
Snacks:		

TABLE 2—REFERENCE AMOUNTS CUSTOMARILY CONSUMED PER EATING OCCASION: GENERAL FOOD SUPPLY [1 2 3]—Continued

Product category	Reference amount	Label statement [4]
All varieties, chips, pretzels, popcorn, extruded snacks, fruit and vegetable-based snacks (e.g., fruit chips), grain-based snack mixes.	30 g	__cup (__g) for small pieces (e.g., popcorn); __piece(s) (__g) for large pieces (e.g., large pretzels; pressed dried fruit sheet); 1 oz (28g/visual unit of measure) for bulk products (e.g., potato chips)
Soups:		
All varieties	245 g	__cup (__g); __cup (__mL)
Dry soup mixes, bouillon	Amount to make 245 g	__cup (__g); __cup (__mL)
Sugars and Sweets:		
Baking candies (e.g., chips).	15 g	__piece(s) (__g) for large pieces; __tbsp(s) (__g) for small pieces; ½ oz (14 g/visual unit of measure) for bulk products
After-dinner confectioneries.	10 g	__piece(s) (__g)
Hard candies, breath mints [8].	2 g	__piece(s) (__g)
Hard candies, roll-type, mini-size in dispenser packages.	5 g	__piece(s) (__g)
Hard candies, others; powdered candies, liquid candies.	15 mL for liquid candies; 15 g for all others.	__piece(s) (__g) for large pieces; __tbsp(s) (__g) for ''mini-size'' candies measurable by tablespoon; __ straw(s) (__g) for powdered candies; __ wax bottle(s) (__mL) for liquid candies; ½ oz (14 g/visual unit of measure) for bulk products
All other candies	30 g	__piece(s) (__g); 1 oz (30 g/visual unit of measure) for bulk products
Confectioner's sugar	30 g	__cup (__g)
Honey, jams, jellies, fruit butter, molasses, fruit pastes, fruit chutneys.	1 tbsp	1 tbsp (__g); 1 tbsp (15 mL)
Marshmallows	30 g	__cup(s) (__g) for small pieces; __piece(s) (__g) for large pieces
Sugar	8 g	__tsp (__g); __piece(s) (__g) for discrete pieces (e.g., sugar cubes, individually packaged products)
Sugar substitutes	An amount equivalent to one reference amount for sugar in sweetness.	__tsp(s) (__g) for solids; __drop(s) (__g) for liquid; __piece(s) (__g) (e.g., individually packaged products)
Syrups	30 mL for all syrups	2 tbsp (30 mL)
Vegetables:		
Dried vegetables, dried tomatoes, sun-dried tomatoes, dried mushrooms, dried seaweed.	5 g, add 5 g for products packaged in oil.	__piece(s); ⅓ cup (__g)
Dried seaweed sheets	3 g	__piece(s) (__g); __cup(s) (__g)

TABLE 2—REFERENCE AMOUNTS CUSTOMARILY CONSUMED PER EATING OCCASION: GENERAL FOOD SUPPLY [1 2 3]—Continued

Product category	Reference amount	Label statement [4]
Vegetables primarily used for garnish or flavor (e.g., pimento,[10] parsley, fresh or dried).	4 g	__piece(s) (__g); __tbsp(s) (__g) for chopped products
Fresh or canned chili peppers, jalapeno peppers, other hot peppers, green onion.	30 g	__piece(s) (__g) [12]; __tbsp(s) (__g); __cup(s) (__g) for sliced or chopped products
All other vegetables without sauce: Fresh, canned, or frozen.	85 g for fresh or frozen; 95 g for vacuum packed; 130 g for canned in liquid, cream-style corn, canned or stewed tomatoes, pumpkin, or winter squash.	__piece(s) (__g) for large pieces (e.g., Brussels sprouts); __cup(s) (__g) for small pieces (e.g., cut corn, green peas); 3 oz (84 g/visual unit of measure) if not measurable by cup
All other vegetables with sauce: Fresh, canned, or frozen.	110 g	__piece(s) (__g) for large pieces (e.g., Brussels sprouts); __cup(s) (__g) for small pieces (e.g., cut corn, green peas); 4 oz (112 g/visual unit of measure) if not measurable by cup
Vegetable juice	240 mL	8 fl oz (240 mL)
Olives [10]	15 g	__piece(s) (__g); __tbsp(s) (__g) for sliced products
Pickles and pickled vegetables, all types [10].	30 g	1 oz (28 g/visual unit of measure)
Pickle relishes	15 g	__tbsp (__g)
Sprouts, all types: Fresh or canned.	1/4 cup	¼ cup (__g)
Vegetable pastes, e.g., tomato paste.	30 g	__tbsp (__g)
Vegetable sauces or purees, e.g., tomato sauce, tomato puree.	60 g	__cup (__g); __cup (__mL)

[1] These values represent the amount (edible portion) of food customarily consumed per eating occasion and were primarily derived from the 1977–1978 and the 1987–1988 Nationwide Food Consumption Surveys conducted by the U.S. Department of Agriculture and updated with data from the National Health and Nutrition Examination Survey, 2003–2004, 2005–2006 and 2007–2008 conducted by the Centers for Diseases Control and Prevention, in the Department of Health and Human Services.

[2] Unless otherwise noted in the Reference Amount column, the reference amounts are for the ready-to-serve or almost ready-to-serve form of the product (*e.g.,* heat and serve, brown and serve). If not listed separately, the reference amount for the unprepared form (*e.g.,* dry mixes, concentrates, dough, batter, fresh and frozen pasta) is the amount required to make the reference amount of the prepared form. Prepared means prepared for consumption (*e.g.,* cooked).

[3] Manufacturers are required to convert the reference amount to the label serving size in a household measure most appropriate to their specific product using the procedures in 21 CFR 101.9(b).

[4] The label statements are meant to provide examples of serving size statements that may be used on the label, but the specific wording may be changed as appropriate for individual products. The term ''piece'' is used as a generic description of a discrete unit. Manufacturers should use the description of a unit that is most appropriate for the specific product (*e.g.,* sandwich for sandwiches, cookie for cookies, and bar for ice cream bars). The guidance provided is for the label statement of products in ready-to-serve or almost ready-to-serve form. The guidance does not apply to the products which require further preparation for consumption (*e.g.,* dry mixes, concentrates) unless specifically stated in the product category, reference amount, or label statement column that it is for these forms of the product. For products that require further preparation, manufacturers must determine the label statement following the rules in § 101.9(b) using the reference amount determined according to § 101.12(c).

[5] Includes cakes that weigh 10 g or more per cubic inch. The serving size for fruitcake is 1 ½ ounces.

[6] Includes cakes that weigh 4 g or more per cubic inch but less than 10 g per cubic inch.

[7] Includes cakes that weigh less than 4 g per cubic inch.

[8] Label serving size for ice cream cones, eggs, and breath mints of all sizes will be 1 unit. Label serving size of all chewing gums that weigh more than the reference amount that can reasonably be consumed at a single-eating occasion will be 1 unit.

[9] Animal products not covered under the Federal Meat Inspection Act or the Poultry Products Inspection Act, such as flesh products from deer, bison, rabbit, quail, wild turkey, geese, ostrich, etc.

[10] If packed or canned in liquid, the reference amount is for the drained solids, except for products in which both the solids and liquids are customarily consumed (*e.g.,* canned chopped clam in juice).

[11] The reference amount for the uncooked form does not apply to raw fish in § 101.45 or to single-ingredient products that consist of fish or game meat as provided for in § 101.9(j)(11).

[12] For raw fruit, vegetables, and fish, manufacturers should follow the label statement for the serving size specified in Appendices C and D to part 101 (21 CFR part 101) Code of Federal Regulations.

[13] Pizza sauce is part of the pizza and is not considered to be sauce topping.

(c) If a product requires further preparation, *e.g.*, cooking or the addition of water or other ingredients, and if paragraph (b) of this section provides a reference amount for the product in the prepared form, but not the unprepared form, then the reference amount for the unprepared product must be the amount of the unprepared product required to make the reference amount for the prepared product as established in paragraph (b) of this section.

(d) The reference amount for an imitation or substitute food or altered food, such as a ''low calorie'' version, shall be the same as for the food for which it is offered as a substitute.

(e) If a food is modified by incorporating air (aerated), and thereby the density of the food is lowered by 25 percent or more in weight than that of an appropriate reference regular food as described in § 101.13(j)(1)(ii)(A), and the reference amount of the regular food is in grams, the manufacturer may determine the reference amount of the aerated food by adjusting for the difference in density of the aerated food relative to the density of the appropriate reference food provided that the manufacturer will show FDA detailed protocol and records of all data that were used to determine the density-adjusted reference amount for the aerated food. The reference amount for the aerated food shall be rounded to the nearest 5-g increment. Such products shall bear a descriptive term indicating that extra air has been incorporated (e.g., whipped, aerated). The density-adjusted reference amounts described in paragraph (b) of this section may not be used for cakes except for cheese cake. The differences in the densities of different types of cakes having different degrees of air incorporation have already been taken into consideration in determining the reference amounts for cakes in § 101.12(b). In determining the difference in density of the aerated and the regular food, the manufacturer shall adhere to the following:

(1) The regular and the aerated product must be the same in size, shape, and volume. To compare the densities of products having nonsmooth surfaces (e.g., waffles), manufacturers shall use a device or method that ensures that the volumes of the regular and the aerated products are the same.

(2) Sample selections for the density measurements shall be done in accordance with the provisions in § 101.9(g).

(3) Density measurements of the regular and the aerated products shall be conducted by the same trained operator using the same methodology (e.g., the same equipment, procedures, and techniques) under the same conditions.

(4) Density measurements shall be replicated a sufficient number of times to ensure that the average of the measurements is representative of the true differences in the densities of the regular and the ''aerated'' products.

(f) For products that have no reference amount listed in paragraph (b) of this section for the unprepared or the prepared form of the product and

that consist of two or more foods packaged and presented to be consumed together (e.g., peanut putter and jelly, cracker and cheese pack, pancakes and syrup, cake and frosting), the reference amount for the combined product shall be determined using the following rules:

(1) The reference amount for the combined product must be the reference amount, as established in paragraph (b) of this section, for the ingredient that is represented as the main ingredient (*e.g.*, peanut butter, pancakes, cake) plus proportioned amounts of all minor ingredients.

(2) If the reference amounts are in compatible units, the weights or volumes must be summed (*e.g.*, the reference amount for equal volumes of peanut butter and jelly for which peanut butter is represented as the main ingredient would be 4 tablespoons (tbsp) (2 tbsp peanut butter plus 2 tbsp jelly)). If the reference amounts are in incompatible units, all amounts must be converted to weights and summed, *e.g.*, the reference amount for pancakes and syrup would be 110 g (the reference amount for pancakes) plus the weight of the proportioned amount of syrup.

(g) The reference amounts set forth in paragraphs (b) through (f) of this section shall be used in determining whether a product meets the criteria for nutrient content claims, such as ''low calorie,'' and for health claims. If the serving size declared on the product label differs from the reference amount, and the product meets the criteria for the claim only on the basis of the reference amount, the claim shall be followed by a statement that sets forth the basis on which the claim is made. That statement shall include the reference amount as it appears in paragraph (b) of this section followed, in parenthesis, by the amount in common household measure if the reference amount is expressed in measures other than common household measures (e.g., for a beverage, ''Very low sodium, 35 mg or less per 240 mL (8 fl oz)'').

(h) The Commissioner of Food and Drugs, either on his or her own initiative or in response to a petition submitted pursuant to part 10 of this chapter, may issue a proposal to establish or amend a reference amount in paragraph (b) of this section. A petition to establish or amend a reference amount shall include:

(1) Objective of the petition;

(2) A description of the product;

(3) A complete sample product label including nutrition label, using the format established by regulation;

(4) A description of the form (e.g., dry mix, frozen dough) in which the product will be marketed;

(5) The intended dietary uses of the product with the major use identified (e.g., milk as a beverage and chips as a snack);

(6) If the intended use is primarily as an ingredient in other foods, list of foods or food categories in which the product will be used as an ingredient with information on the prioritization of the use;

(7) The population group for which the product will be offered for use (e.g., infants, children under 4 years of age);

(8) The names of the most closely related products (or in the case of foods for special dietary use and imitation or substitute foods, the names of the products for which they are offered as substitutes);

(9) The suggested reference amount (the amount of edible portion of food as consumed, excluding bone, seed, shell, or other inedible components) for the population group for which the product is intended with full description of the methodology and procedures that were used to determine the suggested reference amount. In determining the reference amount, general principles and factors in paragraph (a) of this section should be followed.

(10) The suggested reference amount shall be expressed in metric units. Reference amounts for fluids shall be expressed in milliliters. Reference amounts for other foods shall be expressed in grams except when common household units such as cups, tablespoons, and teaspoons, are more appropriate or are more likely to promote uniformity in serving sizes declared on product labels. For example, common household measures would be more appropriate if products within the same category differ substantially in density, such as frozen desserts.

(i) In expressing the reference amounts in milliliters, the following rules shall be followed:

(A) For volumes greater than 30 milliliters (mL), the volume shall be expressed in multiples of 30 mL.

(B) For volumes less than 30 mL, the volume shall be expressed in milliliters equivalent to a whole number of teaspoons or 1 tbsp, i.e., 5, 10, or 15 mL.

(ii) In expressing the reference amounts in grams, the following general rules shall be followed:

(A) For quantities greater than 10 g, the quantity shall be expressed in the nearest 5-g increment.

(B) For quantities less than 10 g, exact gram weights shall be used.

(11) A petition to create a new subcategory of food with its own reference amount shall include the following additional information:

(i) Data that demonstrate that the new subcategory of food will be consumed in amounts that differ enough from the reference amount for the parent category to warrant a separate reference amount. Data must include sample size; and the mean, standard deviation, median, and modal consumed amount per eating occasion for the petitioned product and for other products in the category, excluding the petitioned product. All data must be derived from the same survey data.

(ii) Documentation supporting the difference in dietary usage and product characteristics that affect the consumption size that distinguishes the petitioned product from the rest of the products in the category.

(12) A claim for categorical exclusion under § 25.30 or § 25.32 of this chapter or an environmental assessment under § 25.40 of this chapter, and

(13) In conducting research to collect or process food consumption data in support of the petition, the following general guidelines should be followed.

(i) Sampled population selected should be representative of the demographic and socioeconomic characteristics of the target population group for which the food is intended.

(ii) Sample size (i.e., number of eaters) should be large enough to give reliable estimates for customarily consumed amounts.

(iii) The study protocol should identify potential biases and describe how potential biases are controlled for or, if not possible to control, how they affect interpretation of results.

(iv) The methodology used to collect or process data should be fully documented and should include: study design, sampling procedures, materials used (e.g., questionnaire, and interviewer's manual), procedures used to collect or process data, methods or procedures used to control for unbiased estimates, and procedures used to correct for nonresponse.

(14) A statement concerning the feasibility of convening associations, corporations, consumers, and other interested parties to engage in negotiated rulemaking to develop a proposed rule consistent with the Negotiated Rulemaking Act (5 U.S.C. 561).

[58 FR 44051, Aug. 18, 1993; 58 FR 60109, Nov. 15, 1993, as amended at 59 FR 371, Jan. 4, 1994; 59 FR 24039, May 10, 1994; 62 FR 40598, July 29, 1997; 62 FR 49848, Sept. 23, 1997; 63 FR 14818, Mar. 27, 1998; 64 FR 12890, Mar. 16, 1999; 66 FR 56035, Nov. 6, 2001; 81 FR 34041, May 27, 2016]

§ 101.13 Nutrient content claims—general principles.

(a) This section and the regulations in subpart D of this part apply to foods that are intended for human consumption and that are offered for sale, including conventional foods and dietary supplements.

(b) A claim that expressly or implicitly characterizes the level of a nutrient of the type required to be in nutrition labeling under § 101.9 or under § 101.36 (that is, a nutrient content claim) may not be made on the label or in labeling of foods unless the claim is made in accordance with this regulation and with the applicable regulations in subpart D of this part or in part 105 or part 107 of this chapter.

(1) An expressed nutrient content claim is any direct statement about the level (or range) of a nutrient in the food, e.g., ''low sodium'' or ''contains 100 calories.''

(2) An implied nutrient content claim is any claim that:

(i) Describes the food or an ingredient therein in a manner that suggests that a nutrient is absent or

present in a certain amount (e.g., ''high in oat bran''); or

(ii) Suggests that the food, because of its nutrient content, may be useful in maintaining healthy dietary practices and is made in association with an explicit claim or statement about a nutrient (e.g., ''healthy, contains 3 grams (g) of fat'').

(3) Except for claims regarding vitamins and minerals described in paragraph (q)(3) of this section, no nutrient content claims may be made on food intended specifically for use by infants and children less than 2 years of age unless the claim is specifically provided for in parts 101, 105, or 107 of this chapter.

(4) Reasonable variations in the spelling of the terms defined in part 101 and their synonyms are permitted provided these variations are not misleading (e.g., ''hi'' or ''lo'').

(5) For dietary supplements, claims for calories, fat, saturated fat, and cholesterol may not be made on products that meet the criteria in § 101.60(b)(1) or (b)(2) for ''calorie free'' or ''low calorie'' claims, except, in the case of calorie claims, when an equivalent amount of a similar dietary supplement (e.g., another protein supplement) that the labeled food resembles and for which it substitutes, normally exceeds the definition for ''low calorie'' in § 101.60(b)(2).

(c) Information that is required or permitted by § 101.9 or § 101.36, as applicable, to be declared in nutrition labeling, and that appears as part of the nutrition label, is not a nutrient content claim and is not subject to the requirements of this section. If such information is declared elsewhere on the label or in labeling, it is a nutrient content claim and is subject to the requirements for nutrient content claims.

(d) A ''substitute'' food is one that may be used interchangeably with another food that it resembles, i.e., that it is organoleptically, physically, and functionally (including shelf life) similar to, and that it is not nutritionally inferior to unless it is labeled as an ''imitation.''

(1) If there is a difference in performance characteristics that materially limits the use of the food, the food may still be considered a substitute if the label includes a disclaimer adjacent to the most prominent claim as defined in paragraph (j)(2)(iii) of this section, informing the consumer of such difference (e.g., ''not recommended for frying'').

(2) This disclaimer shall be in easily legible print or type and in a size no less than that required by § 101.7(i) for the net quantity of contents statement, except where the size of the claim is less than two times the required size of the net quantity of contents statement, in which case the disclaimer shall be no less than one-half the size of the claim but no smaller than one-sixteenth of an inch, unless the package complies with § 101.2(c)(5), in which case the disclaimer may be in type of not less than one thirty-second of an inch.

(e)(1) Because the use of a ''free'' or ''low'' claim before the name of a food implies that the food differs from other foods of the same type by virtue of its having a lower amount of the nutrient, only foods that have been specially processed, altered, formulated, or reformulated so as to lower the amount of the nutrient in the food, remove the nutrient from the food, or not include the nutrient in the food, may bear such a claim (e.g., ''low sodium potato chips'').

(2) Any claim for the absence of a nutrient in a food, or that a food is low in a nutrient when the food has not been specially processed, altered, formulated, or reformulated to qualify for that claim shall indicate that the food inherently meets the criteria and shall clearly refer to all foods of that type and not merely to the particular brand to which the labeling attaches (e.g., ''corn oil, a sodium-free food'').

(f) A nutrient content claim shall be in type size no larger than two times the statement of identity and shall not be unduly prominent in type style compared to the statement of identity.

(g) [Reserved]

(h)(1) If a food, except a meal product as defined in § 101.13(l), a main dish product as defined in § 101.13(m), or food intended specifically for use by infants and children less than 2 years of age, contains more than 13.0 g of fat, 4.0 g of saturated fat, 60 milligrams (mg) of cholesterol, or 480 mg of sodium per

reference amount customarily consumed, per labeled serving, or, for a food with a reference amount customarily consumed of 30 g or less or 2 tablespoons or less, per 50 g (for dehydrated foods that must be reconstituted before typical consumption with water or a diluent containing an insignificant amount, as defined in §101.9(f)(1), of all nutrients per reference amount customarily consumed, the per 50 g criterion refers to the ''as prepared'' form), then that food must bear a statement disclosing that the nutrient exceeding the specified level is present in the food as follows: ''See nutrition information for ____ content'' with the blank filled in with the identity of the nutrient exceeding the specified level, e.g., ''See nutrition information for fat content.''

(2) If a food is a meal product as defined in §101.13(l), and contains more than 26 g of fat, 8.0 g of saturated fat, 120 mg of cholesterol, or 960 mg of sodium per labeled serving, then that food must disclose, in accordance with the requirements as provided in paragraph (h)(1) of this section, that the nutrient exceeding the specified level is present in the food.

(3) If a food is a main dish product as defined in §101.13(m), and contains more than 19.5 g of fat, 6.0 g of saturated fat, 90 mg of cholesterol, or 720 mg of sodium per labeled serving, then that food must disclose, in accordance with the requirements as provided in paragraph (h)(1) of this section, that the nutrient exceeding the specified level is present in the food.

(4)(i) The disclosure statement ''See nutrition information for ____ content'' shall be in easily legible boldface print or type, in distinct contrast to other printed or graphic matter, and in a size no less than that required by §101.7(i) for the net quantity of contents statement, except where the size of the claim is less than two times the required size of the net quantity of contents statement, in which case the disclosure statement shall be no less than one-half the size of the claim but no smaller than one-sixteenth of an inch, unless the package complies with §101.2(c)(2), in which case the disclosure statement may be in type of not less than one thirty-second of an inch.

(ii) The disclosure statement shall be immediately adjacent to the nutrient content claim and may have no intervening material other than, if applicable, other information in the statement of identity or any other information that is required to be presented with the claim under this section (e.g., see paragraph (j)(2) of this section) or under a regulation in subpart D of this part (e.g., see §§101.54 and 101.62). If the nutrient content claim appears on more than one panel of the label, the disclosure statement shall be adjacent to the claim on each panel except for the panel that bears the nutrition information where it may be omitted.

(iii) If a single panel of a food label or labeling contains multiple nutrient content claims or a single claim repeated several times, a single disclosure statement may be made. The statement shall be adjacent to the claim that is printed in the largest type on that panel.

(i) Except as provided in §101.9 or §101.36, as applicable, or in paragraph (q)(3) of this section, the label or labeling of a product may contain a statement about the amount or percentage of a nutrient if:

(1) The use of the statement on the food implicitly characterizes the level of the nutrient in the food and is consistent with a definition for a claim, as provided in subpart D of this part, for the nutrient that the label addresses. Such a claim might be, ''less than 3 g of fat per serving;''

(2) The use of the statement on the food implicitly characterizes the level of the nutrient in the food and is not consistent with such a definition, but the label carries a disclaimer adjacent to the statement that the food is not ''low'' in or a ''good source'' of the nutrient, such as ''only 200 mg sodium per serving, not a low sodium food.'' The disclaimer must be in easily legible print or type and in a size no less than that required by §101.7(i) for the net quantity of contents statement except where the size of the claim is less than two times the required size of the net quantity of contents statement, in which case the disclaimer shall be no less than one-half the size of the claim but no smaller than one-sixteenth of an inch unless the package complies with

§ 101.2(c)(5), in which case the disclaimer may be in type of not less less than one thirty-second of an inch, or

(3) The statement does not in any way implicitly characterize the level of the nutrient in the food and it is not false or misleading in any respect (e.g., ''100 calories'' or ''5 grams of fat''), in which case no disclaimer is required.

(4) ''Percent fat free'' claims are not authorized by this paragraph. Such claims shall comply with § 101.62(b)(6).

(j) A food may bear a statement that compares the level of a nutrient in the food with the level of a nutrient in a reference food. These statements shall be known as ''relative claims'' and include ''light,'' ''reduced,'' ''less'' (or ''fewer''), and ''more'' claims.

(1) To bear a relative claim about the level of a nutrient, the amount of that nutrient in the food must be compared to an amount of nutrient in an appropriate reference food as specified below.

(i)(A) For ''less'' (or ''fewer'') and ''more'' claims, the reference food may be a dissimilar food within a product category that can generally be substituted for one another in the diet (e.g., potato chips as reference for pretzels, orange juice as a reference for vitamin C tablets) or a similar food (e.g., potato chips as reference for potato chips, one brand of multivitamin as reference for another brand of multivitamin).

(B) For ''light,'' ''reduced,'' ''added,'' ''extra,'' ''plus,'' ''fortified,'' and ''enriched'' claims, the reference food shall be a similar food (e.g., potato chips as a reference for potato chips, one brand of multivitamin for another brand of multivitamin), and

(ii)(A) For ''light'' claims, the reference food shall be representative of the type of food that includes the product that bears the claim. The nutrient value for the reference food shall be representative of a broad base of foods of that type; e.g., a value in a representative, valid data base; an average value determined from the top three national (or regional) brands, a market basket norm; or, where its nutrient value is representative of the food type, a market leader. Firms using such a reference nutrient value as a basis for a claim, are required to provide specific information upon which the nutrient value was derived, on request, to consumers and appropriate regulatory officials.

(B) For relative claims other than ''light,'' including ''less'' and ''more'' claims, the reference food may be the same as that provided for ''light'' in paragraph (j)(1)(ii)(A) of this section, or it may be the manufacturer's regular product, or that of another manufacturer, that has been offered for sale to the public on a regular basis for a substantial period of time in the same geographic area by the same business entity or by one entitled to use its trade name. The nutrient values used to determine the claim when comparing a single manufacturer's product to the labeled product shall be either the values declared in nutrition labeling or the actual nutrient values, provided that the resulting label is internally consistent to (i.e., that the values stated in the nutrition information, the nutrient values in the accompanying information and the declaration of the percentage of nutrient by which the food has been modified are consistent and will not cause consumer confusion when compared), and that the actual modification is at least equal to the percentage specified in the definition of the claim.

(2) For foods bearing relative claims:

(i) The label or labeling must state the identity of the reference food and the percentage (or fraction) of the amount of the nutrient in the reference food by which the nutrient in the labeled food differs (e.g., ''50 percent less fat than (reference food)'' or ''1/3 fewer calories than (reference food)''),

(ii) This information shall be immediately adjacent to the most prominent claim. The type size shall be in accordance with paragraph (h)(4)(i) of this section.

(iii) The determination of which use of the claim is in the most prominent location on the label or labeling will be made based on the following factors, considered in order:

(A) A claim on the principal display panel adjacent to the statement of identity;

(B) A claim elsewhere on the principal display panel;

(C) A claim on the information panel; or

(D) A claim elsewhere on the label or labeling.

(iv) The label or labeling must also bear:

(A) Clear and concise quantitative information comparing the amount of the subject nutrient in the product per labeled serving with that in the reference food; and

(B) This statement shall appear adjacent to the most prominent claim or to the nutrition label, except that if the nutrition label is on the information panel, the quantitative information may be located elsewhere on the information panel in accordance with § 101.2.

(3) A relative claim for decreased levels of a nutrient may not be made on the label or in labeling of a food if the nutrient content of the reference food meets the requirement for a ''low'' claim for that nutrient (e.g., 3 g fat or less).

(k) The term ''modified'' may be used in the statement of identity of a food that bears a relative claim that complies with the requirements of this part, followed immediately by the name of the nutrient whose content has been altered (e.g., ''Modified fat cheesecake''). This statement of identity must be immediately followed by the comparative statement such as ''Contains 35 percent less fat than _____.'' The label or labeling must also bear the information required by paragraph (j)(2) of this section in the manner prescribed.

(l) For purposes of making a claim, a ''meal product shall be defined as a food that:

(1) Makes a major contribution to the total diet by:

(i) Weighing at least 10 ounces (oz) per labeled serving; and

(ii) Containing not less than three 40-g portions of food, or combinations of foods, from two or more of the following four food groups, except as noted in paragraph (l)(1)(ii)(E) of this section.

(A) Bread, cereal, rice, and pasta group;

(B) Fruits and vegetables group;

(C) Milk, yogurt, and cheese group;

(D) Meat, poultry, fish, dry beans, eggs, and nuts group; except that;

(E) These foods shall not be sauces (except for foods in the above four food groups that are in the sauces), gravies, condiments, relishes, pickles, olives, jams, jellies, syrups, breadings or garnishes; and

(2) Is represented as, or is in a form commonly understood to be, a breakfast, lunch, dinner, or meal. Such representations may be made either by statements, photographs, or vignettes.

(m) For purposes of making a claim, a ''main dish product'' shall be defined as a food that:

(1) Makes a major contribution to a meal by

(i) Weighing at least 6 oz per labeled serving; and

(ii) Containing not less than 40 g of food, or combinations of foods, from each of at least two of the following four food groups, except as noted in paragraph (m)(1)(ii)(E) of this section.

(A) Bread, cereal, rice, and pasta group;

(B) Fruits and vegetables group;

(C) Milk, yogurt, and cheese group;

(D) Meat, poultry, fish, dry beans, eggs, and nuts groups; except that:

(E) These foods shall not be sauces (except for foods in the above four food groups that are in the sauces) gravies, condiments, relishes, pickles, olives, jams, jellies, syrups, breadings, or garnishes; and

(2) Is represented as, or is in a form commonly understood to be, a main dish (e.g, not a beverage or a dessert). Such representations may be made either by statements, photographs, or vignettes.

(n) Nutrition labeling in accordance with § 101.9, § 101.10, or § 101.36, as applicable, shall be provided for any food for which a nutrient content claim is made.

(o) Except as provided in § 101.10, compliance with requirements for nutrient content claims in this section and in the regulations in subpart D of this part, will be determined using the analytical methodology prescribed for determining compliance with nutrition labeling in § 101.9.

(p)(1) Unless otherwise specified, the reference amount customarily consumed set forth in § 101.12(b) through (f) shall be used in determining whether a

product meets the criteria for a nutrient content claim. If the serving size declared on the product label differs from the reference amount customarily consumed, and the amount of the nutrient contained in the labeled serving does not meet the maximum or minimum amount criterion in the definition for the descriptor for that nutrient, the claim shall be followed by the criteria for the claim as required by § 101.12(g) (e.g., ''very low sodium, 35 mg or less per 240 milliliters (8 fl oz.)'').

(2) The criteria for the claim shall be immediately adjacent to the most prominent claim in easily legible print or type and in a size in accordance with paragraph (h)(4)(i) of this section.

(q) The following exemptions apply:

(1) Nutrient content claims that have not been defined by regulation and that are contained in the brand name of a specific food product that was the brand name in use on such food before October 25, 1989, may continue to be used as part of that brand name for such product, provided that they are not false or misleading under section 403(a) of the Federal Food, Drug, and Cosmetic Act (the act). However, foods bearing such claims must comply with section 403(f), (g), and (h) of the act;

(2) A soft drink that used the term *diet* as part of its brand name before October 25, 1989, and whose use of that term was in compliance with § 105.66 of this chapter as that regulation appeared in the Code of Federal Regulations on that date, may continue to use that term as part of its brand name, provided that its use of the term is not false or misleading under section 403(a) of the act. Such claims are exempt from the requirements of section 403(r)(2) of the act (e.g., the disclosure statement also required by § 101.13(h)). Soft drinks marketed after October 25, 1989, may use the term ''diet'' provided they are in compliance with the current § 105.66 of this chapter and the requirements of § 101.13.

(3)(i) A statement that describes the percentage of a vitamin or mineral in the food, including foods intended specifically for use by infants and children less than 2 years of age, in relation to a Reference Daily Intake (RDI) as defined in § 101.9 may be made on the label or in labeling of a food without a regulation authorizing such a claim for a specific vitamin or mineral unless such claim is expressly prohibited by regulation under section 403(r)(2)(A)(vi) of the act.

(ii) Percentage claims for dietary supplements. Under section 403(r)(2)(F) of the act, a statement that characterizes the percentage level of a dietary ingredient for which a reference daily intake (RDI) or daily reference value (DRV) has not been established may be made on the label or in labeling of dietary supplements without a regulation that specifically defines such a statement. All such claims shall be accompanied by any disclosure statement required under paragraph (h) of this section.

(A) *Simple percentage claims.* Whenever a statement is made that characterizes the percentage level of a dietary ingredient for which there is no RDI or DRV, the statement of the actual amount of the dietary ingredient per serving shall be declared next to the percentage statement (e.g., ''40 percent omega-3 fatty acids, 10 mg per capsule'').

(B) *Comparative percentage claims.* Whenever a statement is made that characterizes the percentage level of a dietary ingredient for which there is no RDI or DRV and the statement draws a comparison to the amount of the dietary ingredient in a reference food, the reference food shall be clearly identified, the amount of that food shall be identified, and the information on the actual amount of the dietary ingredient in both foods shall be declared in accordance with paragraph (j)(2)(iv) of this section (e.g., ''twice the omega-3 fatty acids per capsule (80 mg) as in 100 mg of menhaden oil (40 mg)'').

(4) The requirements of this section do not apply to:

(i) Infant formulas subject to section 412(h) of the act; and

(ii) Medical foods defined by section 5(b) of the Orphan Drug Act.

(5) A nutrient content claim used on food that is served in restaurants or other establishments in which food is served for immediate human consumption or which is sold for sale or use in such establishments shall comply with the requirements of this section and

the appropriate definition in subpart D of this part, except that:

(i) Such claim is exempt from the requirements for disclosure statements in paragraph (h) of this section and §§ 101.54(d), 101.62(c), (d)(1)(ii)(D), (d)(2)(iii)(C), (d)(3), (d)(4)(ii)(C), and (d)(5)(ii)(C); and

(ii) In lieu of analytical testing, compliance may be determined using a reasonable basis for concluding that the food that bears the claim meets the definition for the claim. This reasonable basis may derive from recognized data bases for raw and processed foods, recipes, and other means to compute nutrient levels in the foods or meals and may be used provided reasonable steps are taken to ensure that the method of preparation adheres to the factors on which the reasonable basis was determined (e.g., types and amounts of ingredients, cooking temperatures, etc.). Firms making claims on foods based on this reasonable basis criterion are required to provide to appropriate regulatory officials on request the specific information on which their determination is based and reasonable assurance of operational adherence to the preparation methods or other basis for the claim; and

(iii) A term or symbol that may in some contexts constitute a claim under this section may be used, provided that the use of the term or symbol does not characterize the level of a nutrient, and a statement that clearly explains the basis for the use of the term or symbol is prominently displayed and does not characterize the level of a nutrient. For example, a term such as ''lite fare'' followed by an asterisk referring to a note that makes clear that in this restaurant ''lite fare'' means smaller portion sizes than normal; or an item bearing a symbol referring to a note that makes clear that this item meets the criteria for the dietary guidance established by a recognized dietary authority would not be considered a nutrient content claim under § 101.13.

(6) Nutrient content claims that were part of the common or usual names of foods that were subject to a standard of identity on November 8, 1990, are not subject to the requirements of paragraphs (b) and (h) of this section or to definitions in subpart D of this part.

(7) Implied nutrient content claims may be used as part of a brand name, provided that the use of the claim has been authorized by the Food and Drug Administration. Petitions requesting approval of such a claim may be submitted under § 101.69(o).

(8) The term *fluoridated*, *fluoride added* or *with added fluoride* may be used on the label or in labeling of bottled water that contains added fluoride.

[58 FR 2410, Jan. 6, 1993; 58 FR 17341, 17342, Apr. 2, 1993, as amended at 58 FR 44030, Aug. 18, 1993; 59 FR 393, Jan. 4, 1994; 59 FR 15051, Mar. 31, 1994; 60 FR 17205, Apr. 5, 1995; 61 FR 11731, Mar. 22, 1996; 61 FR 40332, Aug. 2, 1996; 61 FR 67452, Dec. 23, 1996; 62 FR 31339, June 9, 1997; 62 FR 49867, Sept. 23, 1997; 63 FR 14818, Mar. 27, 1998; 63 FR 26980, May 15, 1998; 81 FR 59131, Aug. 29, 2016]

§ 101.14 Health claims: general requirements.

(a) *Definitions*. For purposes of this section, the following definitions apply:

(1) *Health claim* means any claim made on the label or in labeling of a food, including a dietary supplement, that expressly or by implication, including ''third party'' references, written statements (e.g., a brand name including a term such as ''heart''), symbols (e.g., a heart symbol), or vignettes, characterizes the relationship of any substance to a disease or health-related condition. Implied health claims include those statements, symbols, vignettes, or other forms of communication that suggest, within the context in which they are presented, that a relationship exists between the presence or level of a substance in the food and a disease or health-related condition.

(2) *Substance* means a specific food or component of food, regardless of whether the food is in conventional food form or a dietary supplement that includes vitamins, minerals, herbs, or other similar nutritional substances.

(3) *Nutritive value* means a value in sustaining human existence by such processes as promoting growth, replacing loss of essential nutrients, or providing energy.

(4) *Disqualifying nutrient levels* means the levels of total fat, saturated fat, cholesterol, or sodium in a food above

which the food will be disqualified from making a health claim. These levels are 13.0 grams (g) of fat, 4.0 g of saturated fat, 60 milligrams (mg) of cholesterol, or 480 mg of sodium, per reference amount customarily consumed, per label serving size, and, only for foods with reference amounts customarily consumed of 30 g or less or 2 tablespoons or less, per 50 g. For dehydrated foods that must have water added to them prior to typical consumption, the per 50-g criterion refers to the as prepared form. Any one of the levels, on a per reference amount customarily consumed, a per label serving size or, when applicable, a per 50 g basis, will disqualify a food from making a health claim unless an exception is provided in subpart E of this part, except that:

(i) The levels for a meal product as defined in §101.13(l) are 26.0 g of fat, 8.0 g of saturated fat, 120 mg of cholesterol, or 960 mg of sodium per label serving size, and

(ii) The levels for a main dish product as defined in §101.13(m) are 19.5 g of fat, 6.0 g of saturated fat, 90 mg of cholesterol, or 720 mg of sodium per label serving size.

(5) *Disease or health-related condition* means damage to an organ, part, structure, or system of the body such that it does not function properly (e.g., cardiovascular disease), or a state of health leading to such dysfunctioning (e.g., hypertension); except that diseases resulting from essential nutrient deficiencies (e.g., scurvy, pellagra) are not included in this definition (claims pertaining to such diseases are thereby not subject to §101.14 or §101.70).

(b) *Eligibility*. For a substance to be eligible for a health claim:

(1) The substance must be associated with a disease or health-related condition for which the general U.S. population, or an identified U.S. population subgroup (e.g., the elderly) is at risk, or, alternatively, the petition submitted by the proponent of the claim otherwise explains the prevalence of the disease or health-related condition in the U.S. population and the relevance of the claim in the context of the total daily diet and satisfies the other requirements of this section.

(2) If the substance is to be consumed as a component of a conventional food at decreased dietary levels, the substance must be a nutrient listed in 21 U.S.C. 343(q)(1)(C) or (q)(1)(D), or one that the Food and Drug Administration (FDA) has required to be included in the label or labeling under 21 U.S.C. 343(q)(2)(A); or

(3) If the substance is to be consumed at other than decreased dietary levels:

(i) The substance must, regardless of whether the food is a conventional food or a dietary supplement, contribute taste, aroma, or nutritive value, or any other technical effect listed in §170.3(o) of this chapter, to the food and must retain that attribute when consumed at levels that are necessary to justify a claim; and

(ii) The substance must be a food or a food ingredient or a component of a food ingredient whose use at the levels necessary to justify a claim has been demonstrated by the proponent of the claim, to FDA's satisfaction, to be safe and lawful under the applicable food safety provisions of the Federal Food, Drug, and Cosmetic Act.

(c) *Validity requirement*. FDA will promulgate regulations authorizing a health claim only when it determines, based on the totality of publicly available scientific evidence (including evidence from well-designed studies conducted in a manner which is consistent with generally recognized scientific procedures and principles), that there is significant scientific agreement, among experts qualified by scientific training and experience to evaluate such claims, that the claim is supported by such evidence.

(d) *General health claim labeling requirements*. (1) When FDA determines that a health claim meets the validity requirements of paragraph (c) of this section, FDA will propose a regulation in subpart E of this part to authorize the use of that claim. If the claim pertains to a substance not provided for in §101.9 or §101.36, FDA will propose amending that regulation to include declaration of the substance.

(2) When FDA has adopted a regulation in subpart E of this part providing for a health claim, firms may make claims based on the regulation in subpart E of this part, provided that:

(i) All label or labeling statements about the substance-disease relationship that is the subject of the claim are based on, and consistent with, the conclusions set forth in the regulations in subpart E of this part;

(ii) The claim is limited to describing the value that ingestion (or reduced ingestion) of the substance, as part of a total dietary pattern, may have on a particular disease or health-related condition;

(iii) The claim is complete, truthful, and not misleading. Where factors other than dietary intake of the substance affect the relationship between the substance and the disease or health-related condition, such factors may be required to be addressed in the claim by a specific regulation in subpart E of this part;

(iv) All information required to be included in the claim appears in one place without other intervening material, except that the principal display panel of the label or labeling may bear the reference statement, ''See _____ for information about the relationship between _____ and _____,'' with the blanks filled in with the location of the labeling containing the health claim, the name of the substance, and the disease or health-related condition (e.g., ''See attached pamphlet for information about calcium and osteoporosis''), with the entire claim appearing elsewhere on the other labeling, Provided that, where any graphic material (e.g., a heart symbol) constituting an explicit or implied health claim appears on the label or labeling, the reference statement or the complete claim shall appear in immediate proximity to such graphic material;

(v) The claim enables the public to comprehend the information provided and to understand the relative significance of such information in the context of a total daily diet; and

(vi) If the claim is about the effects of consuming the substance at decreased dietary levels, the level of the substance in the food is sufficiently low to justify the claim. To meet this requirement, if a definition for use of the term *low* has been established for that substance under this part, the substance must be present at a level that meets the requirements for use of that term, unless a specific alternative level has been established for the substance in subpart E of this part. If no definition for ''low'' has been established, the level of the substance must meet the level established in the regulation authorizing the claim; or

(vii) If the claim is about the effects of consuming the substance at other than decreased dietary levels, the level of the substance is sufficiently high and in an appropriate form to justify the claim. To meet this requirement, if a definition for use of the term *high* for that substance has been established under this part, the substance must be present at a level that meets the requirements for use of that term, unless a specific alternative level has been established for the substance in subpart E of this part. If no definition for ''high'' has been established (e.g., where the claim pertains to a food either as a whole food or as an ingredient in another food), the claim must specify the daily dietary intake necessary to achieve the claimed effect, as established in the regulation authorizing the claim; *Provided* That:

(A) Where the food that bears the claim meets the requirements of paragraphs (d)(2)(vi) or (d)(2)(vii) of this section based on its reference amount customarily consumed, and the labeled serving size differs from that amount, the claim shall be followed by a statement explaining that the claim is based on the reference amount rather than the labeled serving size (e.g., ''Diets low in sodium may reduce the risk of high blood pressure, a disease associated with many factors. A serving of __ ounces of this product conforms to such a diet.'').

(B) Where the food that bears the claim is sold in a restaurant or in other establishments in which food that is ready for immediate human consumption is sold, the food can meet the requirements of paragraphs (d)(2)(vi) or (d)(2)(vii) of this section if the firm that sells the food has a reasonable basis on which to believe that the food that bears the claim meets the requirements of paragraphs (d)(2)(vi) or (d)(2)(vii) of this section and provides that basis upon request.

(3) Nutrition labeling shall be provided in the label or labeling of any

food for which a health claim is made in accordance with § 101.9; for restaurant foods, in accordance with § 101.10; or for dietary supplements, in accordance with § 101.36.

(e) *Prohibited health claims.* No expressed or implied health claim may be made on the label or in labeling for a food, regardless of whether the food is in conventional food form or dietary supplement form, unless:

(1) The claim is specifically provided for in subpart E of this part; and

(2) The claim conforms to all general provisions of this section as well as to all specific provisions in the appropriate section of subpart E of this part;

(3) None of the disqualifying levels identified in paragraph (a)(4) of this section is exceeded in the food, unless specific alternative levels have been established for the substance in subpart E of this part; or unless FDA has permitted a claim despite the fact that a disqualifying level of a nutrient is present in the food based on a finding that such a claim will assist consumers in maintaining healthy dietary practices, and, in accordance with the regulation in subpart E of this part that makes such a finding, the label bears a disclosure statement that complies with § 101.13(h), highlighting the nutrient that exceeds the disqualifying level;

(4) Except as provided in paragraph (e)(3) of this section, no substance is present at an inappropriate level as determined in the specific provision authorizing the claim in subpart E of this part;

(5) The label does not represent or purport that the food is for infants and toddlers less than 2 years of age except if the claim is specifically provided for in subpart E of this part; and

(6) Except for dietary supplements or where provided for in other regulations in part 101, subpart E, the food contains 10 percent or more of the Reference Daily Intake or the Daily Reference Value for vitamin A, vitamin C, iron, calcium, protein, or fiber per reference amount customarily consumed prior to any nutrient addition.

(f) The requirements of this section do not apply to:

(1) Infant formulas subject to section 412(h) of the Federal Food, Drug, and Cosmetic Act, and

(2) Medical foods defined by section 5(b) of the Orphan Drug Act.

(g) *Applicability.* The requirements of this section apply to foods intended for human consumption that are offered for sale, regardless of whether the foods are in conventional food form or dietary supplement form.

[58 FR 2533, Jan. 6, 1993; 58 FR 17097, Apr. 1, 1993, as amended at 58 FR 44038, Aug. 18, 1993; 59 FR 425, Jan. 4, 1994; 59 FR 15050, Mar. 31, 1994; 61 FR 40332, Aug. 2, 1996; 62 FR 49867, Sept. 23, 1997; 63 FR 26980, May 15, 1998; 66 FR 17358, Mar. 30, 2001]

§ 101.15 Food; prominence of required statements.

(a) A word, statement, or other information required by or under authority of the act to appear on the label may lack that prominence and conspicuousness required by section 403(f) of the act by reason (among other reasons) of:

(1) The failure of such word, statement, or information to appear on the part or panel of the label which is presented or displayed under customary conditions of purchase;

(2) The failure of such word, statement, or information to appear on two or more parts or panels of the label, each of which has sufficient space therefor, and each of which is so designed as to render it likely to be, under customary conditions of purchase, the part or panel displayed;

(3) The failure of the label to extend over the area of the container or package available for such extension, so as to provide sufficient label space for the prominent placing of such word, statement, or information;

(4) Insufficiency of label space (for the prominent placing of such word, statement, or information) resulting from the use of label space for any word, statement, design, or device which is not required by or under authority of the act to appear on the label;

(5) Insufficiency of label space (for the prominent placing of such word, statement, or information) resulting from the use of label space to give materially greater conspicuousness to any

other word, statement, or information, or to any design or device; or

(6) Smallness or style of type in which such word, statement, or information appears, insufficient background contrast, obscuring designs or vignettes, or crowding with other written, printed, or graphic matter.

(b) No exemption depending on insufficiency of label space, as prescribed in regulations promulgated under section 403 (e) or (i) of the act, shall apply if such insufficiency is caused by:

(1) The use of label space for any word, statement, design, or device which is not required by or under authority of the act to appear on the label;

(2) The use of label space to give greater conspicuousness to any word, statement, or other information than is required by section 403(f) of the act; or

(3) The use of label space for any representation in a foreign language.

(c)(1) All words, statements, and other information required by or under authority of the act to appear on the label or labeling shall appear thereon in the English language: *Provided, however,* That in the case of articles distributed solely in the Commonwealth of Puerto Rico or in a Territory where the predominant language is one other than English, the predominant language may be substituted for English.

(2) If the label contains any representation in a foreign language, all words, statements, and other information required by or under authority of the act to appear on the label shall appear thereon in the foreign language: *Provided, however,* That individual serving-size packages of foods containing no more than 1½ avoirdupois ounces or no more than 1½ fluid ounces served with meals in restaurants, institutions, and passenger carriers and not intended for sale at retail are exempt from the requirements of this paragraph (c)(2), if the only representation in the foreign language(s) is the name of the food.

(3) If any article of labeling (other than a label) contains any representation in a foreign language, all words, statements, and other information required by or under authority of the act to appear on the label or labeling shall appear on such article of labeling.

§ 101.17 Food labeling warning, notice, and safe handling statements.

(a) *Self-pressurized containers.* (1) The label of a food packaged in a self-pressurized container and intended to be expelled from the package under pressure shall bear the following warning:

WARNING—Avoid spraying in eyes. Contents under pressure. Do not puncture or incinerate. Do not store at temperature above 120 °F. Keep out of reach of children.

(2) In the case of products intended for use by children, the phrase ''except under adult supervision'' may be added at the end of the last sentence in the warning required by paragraph (a)(1) of this section.

(3) In the case of products packaged in glass containers, the word ''break'' may be substituted for the word ''puncture'' in the warning required by paragraph (a)(1) of this section.

(4) The words ''Avoid spraying in eyes'' may be deleted from the warning required by paragraph (a)(1) of this section in the case of a product not expelled as a spray.

(b) *Self-pressurized containers with halocarbon or hydrocarbon propellants.* (1) In addition to the warning required by paragraph (a) of this section, the label of a food packaged in a self-pressurized container in which the propellant consists in whole or in part of a halocarbon or a hydrocarbon shall bear the following warning:

WARNING—Use only as directed. Intentional misuse by deliberately concentrating and inhaling the contents can be harmful or fatal.

(2) The warning required by paragraph (b)(1) of this section is not required for the following products:

(i) Products expelled in the form of a foam or cream, which contain less than 10 percent propellant in the container.

(ii) Products in a container with a physical barrier that prevents escape of the propellant at the time of use.

(iii) Products of a net quantity of contents of less than 2 ounces that are designed to release a measured amount of product with each valve actuation.

(iv) Products of a net quantity of contents of less than one-half ounce.

(c) *Food containing or manufactured with a chlorofluorocarbon or other ozone-*

depleting substance. Labeling requirements for foods that contain or are manufactured with a chlorofluorocarbon or other ozone-depleting substance designated by the Environmental Protection Agency (EPA) are set forth in 40 CFR part 82.

(d) *Protein products.* (1) The label and labeling of any food product in liquid, powdered, tablet, capsule, or similar forms that derives more than 50 percent of its total caloric value from either whole protein, protein hydrolysates, amino acid mixtures, or a combination of these, and that is represented for use in reducing weight shall bear the following warning:

WARNING: Very low calorie protein diets (below 400 Calories per day) may cause serious illness or death. Do Not Use for Weight Reduction in Such Diets Without Medical Supervision. Not for use by infants, children, or pregnant or nursing women.

(2) Products described in paragraph (d)(1) of this section are exempt from the labeling requirements of that paragraph if the protein products are represented as part of a nutritionally balanced diet plan providing 400 or more Calories (kilocalories) per day and the label or labeling of the product specifies the diet plan in detail or provides a brief description of that diet plan and adequate information describing where the detailed diet plan may be obtained and the label and labeling bear the following statement:

Notice: For weight reduction, use only as directed in the accompanying diet plan (the name and specific location in labeling of the diet plan may be included in this statement in place of ''accompanying diet plan''). Do not use in diets supplying less than 400 Calories per day without medical supervision.

(3) The label and labeling of food products represented or intended for dietery (food) supplementation that derive more than 50 percent of their total caloric value from either whole protein, protein hydrolysates, amino acid mixtures, or a combination of these, that are represented specifically for purposes other than weight reduction; and that are not covered by the requirements of paragraph (d) (1) and (2) of this section; shall bear the following statement:

NOTICE: Use this product as a food supplement only. Do not use for weight reduction.

(4) The provisions of this paragraph are separate from and in addition to any labeling requirements promulgated by the Federal Trade Commission for protein supplements.

(5) Protein products shipped in bulk form for use solely in the manufacture of other foods and not for distribution to consumers in such container are exempt from the labeling requirements of this paragraph.

(6) The warning and notice statements required by paragraphs (d) (1), (2), and (3) of this section shall appear prominently and conspicuously on the principal display panel of the package label and any other labeling.

(e) *Dietary supplements containing iron or iron salts.* (1) The labeling of any dietary supplement in solid oral dosage form (e.g., tablets or capsules) that contains iron or iron salts for use as an iron source shall bear the following statement:

WARNING: Accidental overdose of iron-containing products is a leading cause of fatal poisoning in children under 6. Keep this product out of reach of children. In case of accidental overdose, call a doctor or poison control center immediately.

(2)(i) The warning statement required by paragraph (e)(1) of this section shall appear prominently and conspicuously on the information panel of the immediate container label.

(ii) If a product is packaged in unit-dose packaging, and if the immediate container bears labeling but not a label, the warning statement required by paragraph (e)(1) of this section shall appear prominently and conspicuously on the immediate container labeling in a way that maximizes the likelihood that the warning is intact until all of the dosage units to which it applies are used.

(3) Where the immediate container is not the retail package, the warning statement required by paragraph (e)(1) of this section shall also appear prominently and conspicuously on the information panel of the retail package label.

(4) The warning statement shall appear on any labeling that contains warnings.

(5) The warning statement required by paragraph (e)(1) of this section shall be set off in a box by use of hairlines.

(f) *Foods containing psyllium husk.* (1) Foods containing dry or incompletely hydrated psyllium husk, also known as psyllium seed husk, and bearing a health claim on the association between soluble fiber from psyllium husk and reduced risk of coronary heart disease, shall bear a label statement informing consumers that the appropriate use of such foods requires consumption with adequate amounts of fluids, alerting them of potential consequences of failing to follow usage recommendations, and informing persons with swallowing difficulties to avoid consumption of the product (e.g., ''NOTICE: This food should be eaten with at least a full glass of liquid. Eating this product without enough liquid may cause choking. Do not eat this product if you have difficulty in swallowing.''). However, a product in conventional food form may be exempt from this requirement if a viscous adhesive mass is not formed when the food is exposed to fluids.

(2) The statement shall appear prominently and conspicuously on the information panel or principal display panel of the package label and any other labeling to render it likely to be read and understood by the ordinary individual under customary conditions of purchase and use. The statement shall be preceded by the word ''NOTICE'' in capital letters.

(g) *Juices that have not been specifically processed to prevent, reduce, or eliminate the presence of pathogens.* (1) For purposes of this paragraph (g), ''juice'' means the aqueous liquid expressed or extracted from one or more fruits or vegetables, purees of the edible portions of one or more fruits or vegetables, or any concentrate of such liquid or puree.

(2) The label of:

(i) Any juice that has not been processed in the manner described in paragraph (g)(7) of this section; or

(ii) Any beverage containing juice where neither the juice ingredient nor the beverage has been processed in the manner described in paragraph (g)(7) of this section, shall bear the following warning statement:

WARNING: This product has not been pasteurized and, therefore, may contain harmful bacteria that can cause serious illness in children, the elderly, and persons with weakened immune systems.

(3) The warning statement required by this paragraph (g) shall not apply to juice that is not for distribution to retail consumers in the form shipped and that is for use solely in the manufacture of other foods or that is to be processed, labeled, or repacked at a site other than originally processed, provided that for juice that has not been processed in the manner described in paragraph (g)(7) of this section, the lack of such processing is disclosed in documents accompanying the juice, in accordance with the practice of the trade.

(4) The warning statement required by paragraph (g)(2) of this section shall appear prominently and conspicuously on the information panel or on the principal display panel of the label of the container.

(5) The word ''WARNING'' shall be capitalized and shall appear in bold type.

(6) The warning statement required by paragraph (g)(2) of this section, when on a label, shall be set off in a box by use of hairlines.

(7)(i) The requirements in this paragraph (g) shall not apply to a juice that has been processed in a manner that will produce, at a minimum, a reduction in the pertinent microorganism for a period at least as long as the shelf life of the product when stored under normal and moderate abuse conditions, of the following magnitude:

(A) A 5-log (i.e., 100,000-fold) reduction; or

(B) A reduction that is equal to, or greater than, the criterion established for process controls by any final regulation requiring the application of Hazard Analysis and Critical Control Point (HACCP) principles to the processing of juice.

(ii) For the purposes of this paragraph (g), the ''pertinent microorganism'' is the most resistant microorganism of public health significance that is likely to occur in the juice.

(h) *Shell eggs.* (1) The label of all shell eggs, whether in intrastate or interstate commerce, shall bear the following statement:

SAFE HANDLING INSTRUCTIONS: To prevent illness from bacteria: keep eggs refrigerated, cook eggs until yolks are firm, and cook foods containing eggs thoroughly.

(2) The label statement required by paragraph (h)(1) of this section shall appear prominently and conspicuously, with the words ''SAFE HANDLING INSTRUCTIONS'' in bold type, on the principal display panel, the information panel, or on the inside of the lid of egg cartons. If this statement appears on the inside of the lid, the words ''Keep Refrigerated'' must appear on the principal display panel or information panel.

(3) The label statement required by paragraph (h)(1) of this section shall be set off in a box by use of hairlines.

(4) Shell eggs that have been, before distribution to consumers, specifically processed to destroy all viable *Salmonella* shall be exempt from the requirements of paragraph (h) of this section.

(5) The safe handling statement for shell eggs that are not for direct sale to consumers, e.g., those that are to be repacked or labeled at a site other than where originally processed, or are sold for use in food service establishments, may be provided on cartons or in labeling, e.g., invoices or bills of lading in accordance with the practice of the trade.

(6) Under sections 311 and 361 of the Public Health Service Act (PHS Act), any State or locality that is willing and able to assist the agency in the enforcement of paragraphs (h)(1) through (h)(5) of this section, and is authorized to inspect or regulate establishments handling packed shell eggs, may in its own jurisdiction, enforce paragraphs (h)(1) through (h)(5) of this section through inspections under paragraph (h)(8) of this section and through administrative enforcement remedies identified in paragraph (h)(7) of this section until FDA notifies the State or locality in writing that such assistance is no longer needed. When providing such assistance, a State or locality may follow the hearing procedures set out in paragraphs (h)(7)(ii)(C) through (h)(7)(ii)(D) of this section, substituting, where necessary, appropriate State or local officials for designated FDA officials or may utilize State or local hearing procedures if such procedures satisfy due process.

(7) This paragraph (h) is established under authority of both the Federal Food, Drug, and Cosmetic Act (the act) and the PHS Act. Under the act, the agency can enforce the food misbranding provisions under 21 U.S.C. 331, 332, 333, and 334. However, 42 U.S.C. 264 provides for the issuance of implementing enforcement regulations; therefore, FDA has established the following administrative enforcement procedures for the relabeling, diversion, or destruction of shell eggs and informal hearings under the PHS Act:

(i) Upon finding that any shell eggs are in violation of this section an authorized FDA representative or State or local representative in accordance with paragraph (h)(6) of this section may order such eggs to be relabeled under the supervision of said representative, diverted, under the supervision of said representative for processing in accordance with the Egg Products Inspection Act (EPIA) (21 U.S.C. 1031 *et seq.*), or destroyed by or under the supervision of an officer or employee of the FDA, or, if applicable, of the State or locality, in accordance with the following procedures:

(A) *Order for relabeling, diversion, or destruction under the PHS Act.* Any division office of FDA or any State or locality acting under paragraph (h)(6) of this section, upon finding shell eggs held in violation of this section, may serve upon the person in whose possession such eggs are found a written order that such eggs be relabeled with the required statement in paragraph (h)(1) of this section before further distribution. If the person chooses not to relabel, the division office of FDA or, if applicable, the appropriate State or local agency may serve upon the person a written order that such eggs be diverted (from direct consumer sale, *e.g.*, to food service) under the supervision of an officer or employee of the issuing entity, for processing in accordance with the EPIA (21 U.S.C. 1031 *et seq.*) or destroyed by or under the supervision of the issuing entity, within

10 working days from the date of receipt of the order.

(B) *Issuance of order*. The order shall include the following information:

(*1*) A statement that the shell eggs identified in the order are subject to relabeling, diversion for processing in accordance with the EPIA, or destruction;

(*2*) A detailed description of the facts that justify the issuance of the order;

(*3*) The location of the eggs;

(*4*) A statement that these eggs shall not be sold, distributed, or otherwise disposed of or moved except as provided in paragraph (h)(7)(i)(E) of this section;

(*5*) Identification or description of the eggs;

(*6*) The order number;

(*7*) The date of the order;

(*8*) The text of this entire section;

(*9*) A statement that the order may be appealed by written appeal or by requesting an informal hearing;

(*10*) The name and phone number of the person issuing the order; and

(*11*) The location and telephone number of the responsible office or agency and the name of its director.

(C) *Approval of director*. An order, before issuance, shall be approved by the director of the office or agency issuing the order. If prior written approval is not feasible, prior oral approval shall be obtained and confirmed by written memorandum as soon as possible.

(D) *Labeling or marking of shell eggs under order*. An FDA, State, or local representative issuing an order under paragraph (h)(7)(i)(A) of this section shall label or mark the shell eggs with official tags that include the following information:

(*1*) A statement that the shell eggs are detained in accordance with regulations issued under section 361(a) of the PHS Act (42 U.S.C. 264(a)).

(*2*) A statement that the shell eggs shall not be sold, distributed or otherwise disposed of or moved except, after notifying the issuing entity in writing, to:

(*i*) Relabel, divert them for processing in accordance with the EPIA, or destroy them, or

(*ii*) Move them to another location for holding pending appeal.

(*3*) A statement that the violation of the order or the removal or alteration of the tag is punishable by fine or imprisonment or both (section 368 of the PHS Act, 42 U.S.C. 271).

(*4*) The order number and the date of the order, and the name of the government representative who issued the order.

(E) *Sale or other disposition of shell eggs under order*. After service of the order, the person in possession of the shell eggs that are the subject of the order shall not sell, distribute, or otherwise dispose of or move any eggs subject to the order unless and until the notice is withdrawn after an appeal except, after notifying FDA's division office or, if applicable, the State or local agency in writing, to:

(*1*) Relabel, divert, or destroy them as specified in paragraph (h)(7)(i) of this section, or

(*2*) Move them to another location for holding pending appeal.

(ii) The person on whom the order for relabeling, diversion, or destruction is served may either comply with the order or appeal the order to an Office of Regulatory Affairs Program Director.

(A) *Appeal of a detention order*. Any appeal shall be submitted in writing to the FDA Division Director in whose division the shell eggs are located within 5 working days of the issuance of the order. If the appeal includes a request for an informal hearing, the hearing shall be held within 5 working days after the appeal is filed or, if requested by the appellant, at a later date, which shall not be later than 20 calendar days after the issuance of the order. The order may also be appealed within the same period of 5 working days by any other person having an ownership or proprietary interest in such shell eggs. The appellant of an order shall state the ownership or proprietary interest the appellant has in the shell eggs.

(B) *Summary decision*. A request for a hearing may be denied, in whole or in part and at any time after a request for a hearing has been submitted, if the Office of Regulatory Affairs Program Director or another FDA official senior to an FDA Division Director determines that no genuine and substantial issue of fact has been raised by the material submitted in connection with the

hearing or from matters officially noticed. If the presiding FDA official determines that a hearing is not justified, written notice of the determination will be given to the parties explaining the reason for denial.

(C) *Informal hearing.* Appearance by any appellant at the hearing may be by mail or in person, with or without counsel. The informal hearing shall be conducted by an Office of Regulatory Affairs Program Director or another FDA official senior to an FDA Division Director, and a written summary of the proceedings shall be prepared by the presiding FDA official.

(*1*) The presiding FDA official may direct that the hearing be conducted in any suitable manner permitted by law and this section. The presiding FDA official has the power to take such actions and make such rulings as are necessary or appropriate to maintain order and to conduct an informal, fair, expeditious, and impartial hearing, and to enforce the requirements concerning the conduct of hearings.

(*2*) Employees of FDA will first give a full and complete statement of the action which is the subject of the hearing, together with the information and reasons supporting it, and may present oral or written information relevant to the hearing. The party requesting the hearing may then present oral or written information relevant to the hearing. All parties may conduct reasonable examination of any person (except for the presiding officer and counsel for the parties) who makes any statement on the matter at the hearing.

(*3*) The hearing shall be informal in nature, and the rules of evidence do not apply. No motions or objections relating to the admissibility of information and views will be made or considered, but any party may comment upon or rebut any information and views presented by another party.

(*4*) The party requesting the hearing may have the hearing transcribed, at the party's expense, in which case a copy of the transcript is to be furnished to FDA. Any transcript of the hearing will be included with the presiding FDA official's report of the hearing.

(*5*) The presiding FDA official shall prepare a written report of the hearing. All written material presented at the hearing will be attached to the report. Whenever time permits, the presiding FDA official may give the parties the opportunity to review and comment on the report of the hearing.

(*6*) The presiding FDA official shall include as part of the report of the hearing a finding on the credibility of witnesses (other than expert witnesses) whenever credibility is a material issue, and shall include a recommended decision, with a statement of reasons.

(D) *Written appeal.* If the appellant appeals the detention order but does not request a hearing, the presiding FDA official shall render a decision on the appeal affirming or revoking the detention within 5-working days after the receipt of the appeal.

(E) *Presiding FDA official's decision.* If, based on the evidence presented at the hearing or by the appellant in a written appeal, the presiding FDA official finds that the shell eggs were held in violation of this section, he shall affirm the order that they be relabeled, diverted under the supervision of an officer or employee of FDA for processing under the EPIA, or destroyed by or under the supervision of an officer or employee of FDA; otherwise, the presiding FDA official shall issue a written notice that the prior order is withdrawn. If the presiding FDA official affirms the order, he shall order that the relabeling, diversion, or destruction be accomplished within 10-working days from the date of the issuance of his decision. The presiding FDA official's decision shall be accompanied by a statement of the reasons for the decision. The decision of the presiding FDA official shall constitute final agency action, reviewable in the courts.

(F) *No appeal.* If there is no appeal of the order and the person in possession of the shell eggs that are subject to the order fails to relabel, divert, or destroy them within 10 working days, or if the demand is affirmed by the presiding FDA official after an appeal and the person in possession of such eggs fails to relabel, divert, or destroy them within 10 working days, the FDA division office, or, if applicable, the State or local agency may designate an officer or employee to divert or destroy

such eggs. It shall be unlawful to prevent or to attempt to prevent such diversion or destruction of the shell eggs by the designated officer or employee.

(8) Persons engaged in handling or storing packed shell eggs for retail distribution shall permit authorized representatives of FDA to make at any reasonable time such inspection of the establishment in which shell eggs are being held, including inspection and sampling of the labeling of such eggs as may be necessary in the judgment of such representatives to determine compliance with the provisions of this section. Inspections may be made with or without notice and will ordinarily be made during regular business hours.

(9) No State or local governing entity shall establish or continue in effect any law, rule, regulation, or other requirement requiring safe handling instructions on unpasteurized shell eggs that are less stringent than those required in paragraphs (h)(1) through (h)(5) of this section.

[42 FR 14308, Mar. 15, 1977]

EDITORIAL NOTE: For FEDERAL REGISTER citations affecting § 101.17, see the List of CFR Sections Affected, which appears in the Finding Aids section of the printed volume and at *www.govinfo.gov*.

§ 101.18 Misbranding of food.

(a) Among representations in the labeling of a food which render such food misbranded is a false or misleading representation with respect to another food or a drug, device, or cosmetic.

(b) The labeling of a food which contains two or more ingredients may be misleading by reason (among other reasons) of the designation of such food in such labeling by a name which includes or suggests the name of one or more but not all such ingredients, even though the names of all such ingredients are stated elsewhere in the labeling.

(c) Among representations in the labeling of a food which render such food misbranded is any representation that expresses or implies a geographical origin of the food or any ingredient of the food except when such representation is either:

(1) A truthful representation of geographical origin.

(2) A trademark or trade name provided that as applied to the article in question its use is not deceptively misdescriptive. A trademark or trade name composed in whole or in part of geographical words shall not be considered deceptively misdescriptive if it:

(i) Has been so long and exclusively used by a manufacturer or distributor that it is generally understood by the consumer to mean the product of a particular manufacturer or distributor; or

(ii) Is so arbitrary or fanciful that it is not generally understood by the consumer to suggest geographic origin.

(3) A part of the name required by applicable Federal law or regulation.

(4) A name whose market significance is generally understood by the consumer to connote a particular class, kind, type, or style of food rather than to indicate geographical origin.

Subpart B—Specific Food Labeling Requirements

§ 101.22 Foods; labeling of spices, flavorings, colorings and chemical preservatives.

(a)(1) The term *artificial flavor* or *artificial flavoring* means any substance, the function of which is to impart flavor, which is not derived from a spice, fruit or fruit juice, vegetable or vegetable juice, edible yeast, herb, bark, bud, root, leaf or similar plant material, meat, fish, poultry, eggs, dairy products, or fermentation products thereof. Artificial flavor includes the substances listed in §§ 172.515(b) and 182.60 of this chapter except where these are derived from natural sources.

(2) The term *spice* means any aromatic vegetable substance in the whole, broken, or ground form, except for those substances which have been traditionally regarded as foods, such as onions, garlic and celery; whose significant function in food is seasoning rather than nutritional; that is true to name; and from which no portion of any volatile oil or other flavoring principle has been removed. Spices include the spices listed in § 182.10 and part 184 of this chapter, such as the following:

Allspice, Anise, Basil, Bay leaves, Caraway seed, Cardamon, Celery seed, Chervil, Cinnamon, Cloves, Coriander, Cumin seed, Dill seed, Fennel seed, Fenugreek, Ginger,

Horseradish, Mace, Marjoram, Mustard flour, Nutmeg, Oregano, Paprika, Parsley, Pepper, black; Pepper, white; Pepper, red; Rosemary, Saffron, Sage, Savory, Star aniseed, Tarragon, Thyme, Turmeric.

Paprika, turmeric, and saffron or other spices which are also colors, shall be declared as ''spice and coloring'' unless declared by their common or usual name.

(3) The term *natural flavor* or *natural flavoring* means the essential oil, oleoresin, essence or extractive, protein hydrolysate, distillate, or any product of roasting, heating or enzymolysis, which contains the flavoring constituents derived from a spice, fruit or fruit juice, vegetable or vegetable juice, edible yeast, herb, bark, bud, root, leaf or similar plant material, meat, seafood, poultry, eggs, dairy products, or fermentation products thereof, whose significant function in food is flavoring rather than nutritional. Natural flavors include the natural essence or extractives obtained from plants listed in §§ 182.10, 182.20, 182.40, and 182.50 and part 184 of this chapter, and the substances listed in § 172.510 of this chapter.

(4) The term *artificial color* or *artificial coloring* means any ''color additive'' as defined in § 70.3(f) of this chapter.

(5) The term *chemical preservative* means any chemical that, when added to food, tends to prevent or retard deterioration thereof, but does not include common salt, sugars, vinegars, spices, or oils extracted from spices, substances added to food by direct exposure thereof to wood smoke, or chemicals applied for their insecticidal or herbicidal properties.

(b) A food which is subject to the requirements of section 403(k) of the act shall bear labeling, even though such food is not in package form.

(c) A statement of artificial flavoring, artificial coloring, or chemical preservative shall be placed on the food or on its container or wrapper, or on any two or all three of these, as may be necessary to render such statement likely to be read by the ordinary person under customary conditions of purchase and use of such food. The specific artificial color used in a food shall be identified on the labeling when so required by regulation in part 74 of this chapter to assure safe conditions of use for the color additive.

(d) A food shall be exempt from compliance with the requirements of section 403(k) of the act if it is not in package form and the units thereof are so small that a statement of artificial flavoring, artificial coloring, or chemical preservative, as the case may be, cannot be placed on such units with such conspicuousness as to render it likely to be read by the ordinary individual under customary conditions of purchase and use.

(e) A food shall be exempt while held for sale from the requirements of section 403(k) of the act (requiring label statement of any artificial flavoring, artificial coloring, or chemical preservatives) if said food, having been received in bulk containers at a retail establishment, is displayed to the purchaser with either (1) the labeling of the bulk container plainly in view or (2) a counter card, sign, or other appropriate device bearing prominently and conspicuously the information required to be stated on the label pursuant to section 403(k).

(f) A fruit or vegetable shall be exempt from compliance with the requirements of section 403(k) of the act with respect to a chemical preservative applied to the fruit or vegetable as a pesticide chemical prior to harvest.

(g) A flavor shall be labeled in the following way when shipped to a food manufacturer or processor (but not a consumer) for use in the manufacture of a fabricated food, unless it is a flavor for which a standard of identity has been promulgated, in which case it shall be labeled as provided in the standard:

(1) If the flavor consists of one ingredient, it shall be declared by its common or usual name.

(2) If the flavor consists of two or more ingredients, the label either may declare each ingredient by its common or usual name or may state ''All flavor ingredients contained in this product are approved for use in a regulation of the Food and Drug Administration.'' Any flavor ingredient not contained in one of these regulations, and any nonflavor ingredient, shall be separately listed on the label.

(3) In cases where the flavor contains a solely natural flavor(s), the flavor shall be so labeled, e.g., ''strawberry flavor'', ''banana flavor'', or ''natural strawberry flavor''. In cases where the flavor contains both a natural flavor and an artificial flavor, the flavor shall be so labeled, e.g., ''natural and artificial strawberry flavor''. In cases where the flavor contains a solely artificial flavor(s), the flavor shall be so labeled, e.g., ''artificial strawberry flavor''.

(h) The label of a food to which flavor is added shall declare the flavor in the statement of ingredients in the following way:

(1) Spice, natural flavor, and artificial flavor may be declared as ''spice'', ''natural flavor'', or ''artificial flavor'', or any combination thereof, as the case may be.

(2) An incidental additive in a food, originating in a spice or flavor used in the manufacture of the food, need not be declared in the statement of ingredients if it meets the requirements of § 101.100(a)(3).

(3) Substances obtained by cutting, grinding, drying, pulping, or similar processing of tissues derived from fruit, vegetable, meat, fish, or poultry, e.g., powdered or granulated onions, garlic powder, and celery powder, are commonly understood by consumers to be food rather than flavor and shall be declared by their common or usual name.

(4) Any salt (sodium chloride) used as an ingredient in food shall be declared by its common or usual name ''salt.''

(5) Any monosodium glutamate used as an ingredient in food shall be declared by its common or usual name ''monosodium glutamate.''

(6) Any pyroligneous acid or other artificial smoke flavors used as an ingredient in a food may be declared as artificial flavor or artificial smoke flavor. No representation may be made, either directly or implied, that a food flavored with pyroligneous acid or other artificial smoke flavor has been smoked or has a true smoked flavor, or that a seasoning sauce or similar product containing pyroligneous acid or other artificial smoke flavor and used to season or flavor other foods will result in a smoked product or one having a true smoked flavor.

(7) Because protein hydrolysates function in foods as both flavorings and flavor enhancers, no protein hydrolysate used in food for its effects on flavor may be declared simply as ''flavor,'' ''natural flavor,'' or ''flavoring.'' The ingredient shall be declared by its specific common or usual name as provided in § 102.22 of this chapter.

(i) If the label, labeling, or advertising of a food makes any direct or indirect representations with respect to the primary recognizable flavor(s), by word, vignette, e.g., depiction of a fruit, or other means, or if for any other reason the manufacturer or distributor of a food wishes to designate the type of flavor in the food other than through the statement of ingredients, such flavor shall be considered the characterizing flavor and shall be declared in the following way:

(1) If the food contains no artificial flavor which simulates, resembles or reinforces the characterizing flavor, the name of the food on the principal display panel or panels of the label shall be accompanied by the common or usual name of the characterizing flavor, e.g., ''vanilla'', in letters not less than one-half the height of the letters used in the name of the food, except that:

(i) If the food is one that is commonly expected to contain a characterizing food ingredient, e.g., strawberries in ''strawberry shortcake'', and the food contains natural flavor derived from such ingredient and an amount of characterizing ingredient insufficient to independently characterize the food, or the food contains no such ingredient, the name of the characterizing flavor may be immediately preceded by the word ''natural'' and shall be immediately followed by the word ''flavored'' in letters not less than one-half the height of the letters in the name of the characterizing flavor, e.g., ''natural strawberry flavored shortcake,'' or ''strawberry flavored shortcake''.

(ii) If none of the natural flavor used in the food is derived from the product whose flavor is simulated, the food in which the flavor is used shall be labeled either with the flavor of the product from which the flavor is derived or as ''artificially flavored.''

(iii) If the food contains both a characterizing flavor from the product whose flavor is simulated and other natural flavor which simulates, resembles or reinforces the characterizing flavor, the food shall be labeled in accordance with the introductory text and paragraph (i)(1)(i) of this section and the name of the food shall be immediately followed by the words ''with other natural flavor'' in letters not less than one-half the height of the letters used in the name of the characterizing flavor.

(2) If the food contains any artificial flavor which simulates, resembles or reinforces the characterizing flavor, the name of the food on the principal display panel or panels of the label shall be accompanied by the common or usual name(s) of the characterizing flavor, in letters not less than one-half the height of the letters used in the name of the food and the name of the characterizing flavor shall be accompanied by the word(s) ''artificial'' or ''artificially flavored'', in letters not less than one-half the height of the letters in the name of the characterizing flavor, e.g., ''artificial vanilla'', ''artificially flavored strawberry'', or ''grape artificially flavored''.

(3) Wherever the name of the characterizing flavor appears on the label (other than in the statement of ingredients) so conspicuously as to be easily seen under customary conditions of purchase, the words prescribed by this paragraph shall immediately and conspicuously precede or follow such name, without any intervening written, printed, or graphic matter, except:

(i) Where the characterizing flavor and a trademark or brand are presented together, other written, printed, or graphic matter that is a part of or is associated with the trademark or brand may intervene if the required words are in such relationship with the trademark or brand as to be clearly related to the characterizing flavor; and

(ii) If the finished product contains more than one flavor subject to the requirements of this paragraph, the statements required by this paragraph need appear only once in each statement of characterizing flavors present in such food, e.g., ''artificially flavored vanilla and strawberry''.

(iii) If the finished product contains three or more distinguishable characterizing flavors, or a blend of flavors with no primary recognizable flavor, the flavor may be declared by an appropriately descriptive generic term in lieu of naming each flavor, e.g., ''artificially flavored fruit punch''.

(4) A flavor supplier shall certify, in writing, that any flavor he supplies which is designated as containing no artificial flavor does not, to the best of his knowledge and belief, contain any artificial flavor, and that he has added no artificial flavor to it. The requirement for such certification may be satisfied by a guarantee under section 303(c)(2) of the act which contains such a specific statement. A flavor user shall be required to make such a written certification only where he adds to or combines another flavor with a flavor which has been certified by a flavor supplier as containing no artificial flavor, but otherwise such user may rely upon the supplier's certification and need make no separate certification. All such certifications shall be retained by the certifying party throughout the period in which the flavor is supplied and for a minimum of three years thereafter, and shall be subject to the following conditions:

(i) The certifying party shall make such certifications available upon request at all reasonable hours to any duly authorized office or employee of the Food and Drug Administration or any other employee acting on behalf of the Secretary of Health and Human Services. Such certifications are regarded by the Food and Drug Administration as reports to the government and as guarantees or other undertakings within the meaning of section 301(h) of the act and subject the certifying party to the penalties for making any false report to the government under 18 U.S.C. 1001 and any false guarantee or undertaking under section 303(a) of the act. The defenses provided under section 303(c)(2) of the act shall be applicable to the certifications provided for in this section.

(ii) Wherever possible, the Food and Drug Administration shall verify the accuracy of a reasonable number of certifications made pursuant to this section, constituting a representative

sample of such certifications, and shall not request all such certifications.

(iii) Where no person authorized to provide such information is reasonably available at the time of inspection, the certifying party shall arrange to have such person and the relevant materials and records ready for verification as soon as practicable: *Provided*, That, whenever the Food and Drug Administration has reason to believe that the supplier or user may utilize this period to alter inventories or records, such additional time shall not be permitted. Where such additional time is provided, the Food and Drug Administration may require the certifying party to certify that relevant inventories have not been materially disturbed and relevant records have not been altered or concealed during such period.

(iv) The certifying party shall provide, to an officer or representative duly designated by the Secretary, such qualitative statement of the composition of the flavor or product covered by the certification as may be reasonably expected to enable the Secretary's representatives to determine which relevant raw and finished materials and flavor ingredient records are reasonably necessary to verify the certifications. The examination conducted by the Secretary's representative shall be limited to inspection and review of inventories and ingredient records for those certifications which are to be verified.

(v) Review of flavor ingredient records shall be limited to the qualitative formula and shall not include the quantitative formula. The person verifying the certifications may make only such notes as are necessary to enable him to verify such certification. Only such notes or such flavor ingredient records as are necessary to verify such certification or to show a potential or actual violation may be removed or transmitted from the certifying party's place of business: *Provided*, That, where such removal or transmittal is necessary for such purposes the relevant records and notes shall be retained as separate documents in Food and Drug Administration files, shall not be copied in other reports, and shall not be disclosed publicly other than in a judicial proceeding brought pursuant to the act or 18 U.S.C. 1001.

(j) A food to which a chemical preservative(s) is added shall, except when exempt pursuant to §101.100 bear a label declaration stating both the common or usual name of the ingredient(s) and a separate description of its function, e.g., ''preservative'', ''to retard spoilage'', ''a mold inhibitor'', ''to help protect flavor'' or ''to promote color retention''.

(k) The label of a food to which any coloring has been added shall declare the coloring in the statement of ingredients in the manner specified in paragraphs (k)(1) and (k)(2) of this section, except that colorings added to butter, cheese, and ice cream, if declared, may be declared in the manner specified in paragraph (k)(3) of this section, and colorings added to foods subject to §§105.62 and 105.65 of this chapter shall be declared in accordance with the requirements of those sections.

(1) A color additive or the lake of a color additive subject to certification under 721(c) of the act shall be declared by the name of the color additive listed in the applicable regulation in part 74 or part 82 of this chapter, except that it is not necessary to include the ''FD&C'' prefix or the term ''No.'' in the declaration, but the term ''Lake'' shall be included in the declaration of the lake of the certified color additive (e.g., Blue 1 Lake). Manufacturers may parenthetically declare an appropriate alternative name of the certified color additive following its common or usual name as specified in part 74 or part 82 of this chapter.

(2) Color additives not subject to certification and not otherwise required by applicable regulations in part 73 of this chapter to be declared by their respective common or usual names may be declared as ''Artificial Color,'' ''Artificial Color Added,'' or ''Color Added'' (or by an equally informative term that makes clear that a color additive has been used in the food). Alternatively, such color additives may be declared as ''Colored with _____'' or ''_____ color,'' the blank to be filled in with the name of the color additive listed in the applicable regulation in part 73 of this chapter.

(3) When a coloring has been added to butter, cheese, or ice cream, it need not be declared in the ingredient list unless such declaration is required by a regulation in part 73 or part 74 of this chapter to ensure safe conditions of use for the color additive. Voluntary declaration of all colorings added to butter, cheese, and ice cream, however, is recommended.

[42 FR 14308, Mar. 15, 1977, as amended at 44 FR 3963, Jan. 19, 1979; 44 FR 37220, June 26, 1979; 54 FR 24891, June 12, 1989; 58 FR 2875, Jan. 6, 1993; 63 FR 14818, Mar. 27, 1998; 74 FR 216, Jan. 5, 2009]

§ 101.30 Percentage juice declaration for foods purporting to be beverages that contain fruit or vegetable juice.

(a) This section applies to any food that purports to be a beverage that contains any fruit or vegetable juice (i.e., the product's advertising, label, or labeling bears the name of, or variation on the name of, or makes any other direct or indirect representation with respect to, any fruit or vegetable juice), or the label or labeling bears any vignette (i.e., depiction of a fruit or vegetable) or other pictorial representation of any fruit or vegetable, or the product contains color and flavor that gives the beverage the appearance and taste of containing a fruit or vegetable juice. The beverage may be carbonated or noncarbonated, concentrated, full-strength, diluted, or contain no juice. For example, a soft drink (soda) that does not represent or suggest by its physical characteristics, name, labeling, ingredient statement, or advertising that it contains fruit or vegetable juice does not purport to contain juice and therefore does not require a percent juice declaration.

(b)(1) If the beverage contains fruit or vegetable juice, the percentage shall be declared by the words ''Contains __ percent (or %) _____ juice'' or ''__ percent (or %) juice,'' or a similar phrase, with the first blank filled in with the percentage expressed as a whole number not greater than the actual percentage of the juice and the second blank (if used) filled in with the name of the particular fruit or vegetable (e.g., ''Contains 50 percent apple juice'' or ''50 percent juice'').

(2) If the beverage contains less than 1 percent juice, the total percentage juice shall be declared as ''less than 1 percent juice'' or ''less than 1 percent _____ juice'' with the blank filled in with the name of the particular fruit or vegetable.

(3) If the beverage contains 100 percent juice and also contains non-juice ingredients that do not result in a diminution of the juice soluble solids or, in the case of expressed juice, in a change in the volume, when the 100 percent juice declaration appears on a panel of the label that does not also bear the ingredient statement, it must be accompanied by the phrase ''with added _____,'' the blank filled in with a term such as ''ingredient(s),'' ''preservative,'' or ''sweetener,'' as appropriate (e.g., ''100% juice with added sweetener''), except that when the presence of the non-juice ingredient(s) is declared as a part of the statement of identity of the product, this phrase need not accompany the 100 percent juice declaration.

(c) If a beverage contains minor amounts of juice for flavoring and is labeled with a flavor description using terms such as ''flavor'', ''flavored'', or ''flavoring'' with a fruit or vegetable name and does not bear:

(1) The term ''juice'' on the label other than in the ingredient statement; or

(2) An explicit vignette depicting the fruit or vegetable from which the flavor derives, such as juice exuding from a fruit or vegetable; or

(3) Specific physical resemblance to a juice or distinctive juice characteristic such as pulp then total percentage juice declaration is not required.

(d) If the beverage does not meet the criteria for exemption from total juice percentage declaration as described in paragraph (c) of this section and contains no fruit or vegetable juice, but the labeling or color and flavor of the beverage represents, suggests, or implies that fruit or vegetable juice may be present (e.g., the product advertising or labeling bears the name, a variation of the name, or a pictorial representation of any fruit or vegetable, or the product contains color and flavor that give the beverage the appearance and taste of containing a

fruit or vegetable juice), then the label shall declare ''contains zero (0) percent (or %) juice''. Alternatively, the label may declare ''Containing (or contains) no _____ juice'', or ''no _____ juice'', or ''does not contain _____ juice'', the blank to be filled in with the name of the fruits or vegetables represented, suggested, or implied, but if there is a general suggestion that the product contains fruit or vegetable juice, such as the presence of fruit pulp, the blank shall be filled in with the word ''fruit'' or ''vegetable'' as applicable (e.g., ''contains no fruit juice'', or ''does not contain fruit juice'').

(e) If the beverage is sold in a package with an information panel as defined in § 101.2, the declaration of amount of juice shall be prominently placed on the information panel in lines generally parallel to other required information, appearing:

(1) Near the top of the information panel, with no other printed label information appearing above the statement except the brand name, product name, logo, or universal product code; and

(2) In easily legible boldface print or type in distinct contrast to other printed or graphic matter, in a height not less than the largest type found on the information panel except that used for the brand name, product name, logo, universal product code, the title phrase ''Nutrition Facts,'' the declaration of ''Serving size,'' ''Calories'' and the numerical value for ''Calories appearing in the nutrition information as required by § 101.9.

(f) The percentage juice declaration may also be placed on the principal display panel, provided that the declaration is consistent with that presented on the information panel.

(g) If the beverage is sold in a package that does not bear an information panel as defined in § 101.2, the percentage juice declaration shall be placed on the principal display panel, in type size not less than that required for the declaration of net quantity of contents statement in § 101.7(i), and be placed near the name of the food.

(h)(1) In enforcing these regulations, the Food and Drug Administration will calculate the labeled percentage of juice from concentrate found in a juice or juice beverage using the minimum Brix levels listed below:

Juice	100 percent juice [1]
Acerola	6.0
Apple	11.5
Apricot	11.7
Banana	22.0
Blackberry	10.0
Blueberry	10.0
Boysenberry	10.0
Cantaloupe Melon	9.6
Carambola	7.8
Carrot	8.0
Casaba Melon	7.5
Cashew (Caju)	12.0
Celery	3.1
Cherry, dark, sweet	20.0
Cherry, red, sour	14.0
Crabapple	15.4
Cranberry	7.5
Currant (Black)	11.0
Currant (Red)	10.5
Date	18.5
Dewberry	10.0
Elderberry	11.0
Fig	18.2
Gooseberry	8.3
Grape	16.0
Grapefruit	[3]10.0
Guanabana (soursop)	16.0
Guava	7.7
Honeydew melon	9.6
Kiwi	15.4
Lemon	[2]4.5
Lime	[2]4.5
Loganberry	10.5
Mango	13.0
Nectarine	11.8
Orange	[3]11.8
Papaya	11.5
Passion Fruit	14.0
Peach	10.5
Pear	12.0
Pineapple	12.8
Plum	14.3
Pomegranate	16.0
Prune	18.5
Quince	13.3
Raspberry (Black)	11.1
Raspberry (Red)	9.2
Rhubarb	5.7
Strawberry	8.0
Tangerine	[3]11.8
Tomato	5.0
Watermelon	7.8
Youngberry	10.0

[1] Indicates Brix value unless other value specified.
[2] Indicates anhydrous citrus acid percent by weight.
[3] Brix values determined by refractometer for citrus juices may be corrected for citric acid.

(2) If there is no Brix level specified in paragraph (h)(1) of this section, the labeled percentage of that juice from concentrate in a juice or juice beverage will be calculated on the basis of the soluble solids content of the single-

strength (unconcentrated) juice used to produce such concentrated juice.

(i) Juices directly expressed from a fruit or vegetable (i.e., not concentrated and reconstituted) shall be considered to be 100 percent juice and shall be declared as ''100 percent juice.''

(j) Calculations of the percentage of juice in a juice blend or a diluted juice product made directly from expressed juice (i.e., not from concentrate) shall be based on the percentage of the expressed juice in the product computed on a volume/volume basis.

(k) If the product is a beverage that contains a juice whose color, taste, or other organoleptic properties have been modified to the extent that the original juice is no longer recognizable at the time processing is complete, or if its nutrient profile has been diminished to a level below the normal nutrient range for the juice, then that juice to which such a major modification has been made shall not be included in the total percentage juice declaration.

(l) A beverage required to bear a percentage juice declaration on its label, that contains less than 100 percent juice, shall not bear any other percentage declaration that describes the juice content of the beverage in its label or in its labeling (e.g., ''100 percent natural'' or ''100 percent pure''). However, the label or labeling may bear percentage statements clearly unrelated to juice content (e.g., ''provides 100 percent of U.S. RDA of vitamin C'').

(m) Products purporting to be beverages that contain fruit or vegetable juices are exempted from the provisions of this section until May 8, 1994. All products that are labeled on or after that date shall comply with this section.

[58 FR 2925, Jan. 6, 1993, as amended at 58 FR 44063, Aug. 18, 1993; 58 FR 49192, Sept. 22, 1993; 81 FR 33994, May 27, 2016; 81 FR 59131, Aug. 29, 2016]

Subpart C—Specific Nutrition Labeling Requirements and Guidelines

SOURCE: 55 FR 60890, Nov. 27, 1991, unless otherwise noted.

§ 101.36 Nutrition labeling of dietary supplements.

(a) The label of a dietary supplement that is offered for sale shall bear nutrition labeling in accordance with this regulation unless an exemption is provided for the product in paragraph (h) of this section.

(b) The declaration of nutrition information on the label and in labeling shall contain the following information, using the subheadings and the format specified in paragraph (e) of this section.

(1) *Serving size.* (i) The subheading ''Serving Size'' shall be placed under the heading ''Supplement Facts'' and aligned on the left side of the nutrition label. The serving size shall be determined in accordance with §§ 101.9(b) and 101.12(b), Table 2. Serving size for dietary supplements shall be expressed using a term that is appropriate for the form of the supplement, such as ''tablets,'' ''capsules,'' ''packets,'' or ''teaspoonfuls.''

(ii) The subheading ''Servings Per Container'' shall be placed under the subheading ''Serving Size'' and aligned on the left side of the nutrition label, except that this information need not be provided when it is stated in the net quantity of contents declaration.

(2) *Information on dietary ingredients that have a Reference Daily Intake (RDI) or a Daily Reference Value (DRV) as established in § 101.9(c) and their subcomponents (hereinafter referred to as ''(b)(2)-dietary ingredients'').* (i) The (b)(2)-dietary ingredients to be declared, that is, total calories, total fat, saturated fat, *trans* fat, cholesterol, sodium, total carbohydrate, dietary fiber, total sugars, added sugars, protein, vitamin D, calcium, iron, and potassium, shall be declared when they are present in a dietary supplement in quantitative amounts by weight that exceed the amount that can be declared as zero in nutrition labeling of foods in accordance with § 101.9(c). Calories from saturated fat, polyunsaturated fat, monounsaturated fat, soluble fiber, insoluble fiber, and sugar alcohol may be declared, but they shall be declared when a claim is made about them. Any (b)(2)-dietary ingredients that are not present, or that are present in amounts that can be declared as zero in

§ 101.9(c), shall not be declared (*e.g.*, amounts corresponding to less than 2 percent of the RDI for vitamins and minerals). Protein shall not be declared on labels of products that, other than ingredients added solely for technological reasons, contain only individual amino acids.

(A) The names and the quantitative amounts by weight of each (b)(2)-dietary ingredient shall be presented under the heading ''Amount Per Serving.'' When the quantitative amounts by weight are presented in a separate column, the heading may be centered over a column of quantitative amounts, described by paragraph (b)(2)(ii) of this section, if space permits. A heading consistent with the declaration of the serving size, such as ''Each Tablet Contains,'' or ''Amount Per 2 Tablets'' may be used in place of the heading ''Amount Per Serving.'' Other appropriate terms, such as capsule, packet, or teaspoonful, also may be used in place of the term ''Serving.''

(B) The names of dietary ingredients that are declared under paragraph (b)(2)(i) of this section shall be presented in a column aligned on the left side of the nutritional label in the order and manner of indentation specified in § 101.9(c), except that calcium and iron shall follow choline, and sodium and potassium shall follow chloride. This results in the following order for vitamins and minerals: Vitamin A, vitamin C, vitamin D, vitamin E, vitamin K, thiamin, riboflavin, niacin, vitamin B6, folate and folic acid, vitamin B12, biotin, pantothenic acid, choline, calcium, iron, phosphorus, iodine, magnesium, zinc, selenium, copper, manganese, chromium, molybdenum, chloride, sodium, potassium, and fluoride. The (b)(2)-dietary ingredients shall be listed according to the nomenclature specified in § 101.9 or in paragraph (b)(2)(i)(B)(*2*) of this section.

(*1*) When ''Calories'' are declared, they shall be listed first in the column of names, beneath a light bar separating the heading ''Amount Per Serving'' from the list of names. When ''Calories from saturated fat'' are declared, they shall be indented under ''Calories.''

(*2*) The following synonyms may be added in parentheses immediately following the name of these (b)(2)-dietary ingredients: Vitamin C (ascorbic acid), thiamin (vitamin B_1), riboflavin (vitamin B_2), and calories (energy). Energy content per serving may be expressed in kilojoule units, added in parentheses immediately following the statement of caloric content.

(*3*) Beta-carotene may be declared as the percent of vitamin A that is present as beta-carotene, except that the declaration is required when a claim is made about beta-carotene. When declared, the percent shall be declared to the nearest whole percent, immediately adjacent to or beneath the name vitamin A (*e.g.*, ''Vitamin A (90% as beta-carotene)''). The amount of beta-carotene in terms of micrograms (mcg) may be included in the parentheses following the percent statement (*e.g.*, ''Vitamin A (90% (810 mcg) as beta-carotene)'').

(ii) The number of calories, if declared, and the quantitative amount by weight per serving of each dietary ingredient required to be listed under paragraph (b)(2)(i) of this section shall be presented either in a separate column aligned to the right of the column of names or immediately following the listing of names within the same column. The quantitative amounts by weight shall represent the weight of the dietary ingredient rather than the weight of the source of the dietary ingredient (e.g., the weight of calcium rather than that of calcium carbonate).

(A) The amounts shall be expressed in the increments specified in § 101.9(c)(1) through (7), which includes increments for sodium.

(B) The amounts of vitamins and minerals, excluding sodium, shall be the amount of the vitamin or mineral included in one serving of the product, using the units of measurement and the levels of significance given in § 101.9(c)(8)(iv), except that zeros following decimal points may be dropped, and additional levels of significance may be used when the number of decimal places indicated is not sufficient to express lower amounts (*e.g.*, the RDI for zinc is given in whole milligrams (mg), but the quantitative amount may be declared in tenths of a mg). The amount of vitamin D may, but is not

required to, be expressed in IUs, in addition to the mandatory declaration in mcg. Any declaration of the amount of vitamin D in IUs must appear in parentheses after the declaration of the amount of vitamin D in mcg.

(iii) The percent of the Daily Value of all dietary ingredients declared under paragraph (b)(2)(i) of this section shall be listed, except that the percent Daily Value for protein, when present, shall be calculated using the corrected amount of protein as specified in §101.9(c)(7)(ii); no percent of the Daily Value shall be given for subcomponents for which DRVs or RDIs have not been established (*e.g.*, total sugars). Additionally, the percentage of the RDI for protein shall be omitted when a food is purported to be for infants through 12 months of age.

(A) When information on the percent of Daily Values is listed, this information shall be presented in one column aligned under the heading of ''% Daily Value'' and to the right of the column of amounts. The headings ''% Daily Value (DV),'' ''% DV,'' ''Percent Daily Value,'' or ''Percent DV'' may be substituted for ''% Daily Value.'' The heading ''% Daily Value'' shall be placed on the same line as the heading ''Amount Per Serving.'' When the acronym ''DV'' is unexplained in the heading and a footnote is required under (b)(2)(iii)(D), (b)(2)(iii)(F), or (b)(3)(iv) of this section, the footnote shall explain the acronym (e.g. ''Daily Value (DV) not established'').

(B) The percent of Daily Value shall be calculated by dividing the quantitative amount by weight of each (b)(2)-dietary ingredient by the RDI as established in §101.9(c)(8)(iv) or the DRV as established in §101.9(c)(9) for the specified dietary ingredient and multiplying by 100, except that the percent of Daily Value for protein, when present, shall be calculated as specified in §101.9(c)(7)(ii). The quantitative amount by weight of each dietary ingredient in this calculation shall be the unrounded amount, except that for total fat, saturated fat, cholesterol, sodium, potassium, total carbohydrate, and dietary fiber, the quantitative amount by weight declared on the label (i.e, rounded amount) may be used. The numerical value shall be followed by the symbol for percent (i.e., %).

(C) The percentages based on RDI's and on DRV's shall be expressed to the nearest whole percent, except that for dietary ingredients for which DRV's have been established, ''Less than 1%'' or ''<1%'' shall be used to declare the ''% Daily Value'' when the quantitative amount of the dietary ingredient by weight is great enough to require that the dietary ingredient be listed, but the amount is so small that the ''% Daily Value'' when rounded to the nearest percent is zero (e.g., a product that contains 1 gram of total carbohydrate would list the percent Daily Value as ''Less than 1%'' or ''<1%'').

(D) If the percent of Daily Value is declared for total fat, saturated fat, total carbohydrate, dietary fiber, or protein, or added sugars, a symbol shall follow the value listed for those nutrients that refers to the same symbol that is placed at the bottom of the nutrition label, below the bar required under paragraph (e)(6) of this section and inside the box, that is followed by the statement ''Percent Daily Values are based on a 2,000 calorie diet.'' If the product is represented or purported to be for use by children 1 through 3 years of age, and if the percent of Daily Value is declared for total fat, total carbohydrate, dietary fiber, or protein, or added sugars, a symbol shall follow the value listed for those nutrients that refers to the same symbol that is placed at the bottom of the nutrition label, below the bar required under paragraph (e)(6) of this section and inside the box, that is followed by the statement ''Percent Daily Values are based on a 1,000 calorie diet.''

(E) The percent of Daily Value shall be based on RDI or DRV values for adults and children 4 or more years of age, unless the product is represented or purported to be specifically for infants through 12 months of age, children 1 through 3 years of age, pregnant women, or lactating women, in which case the column heading shall clearly state the intended group. If the product is for persons within more than one group, the percent of Daily Value for each group shall be presented in separate columns as shown in paragraph (e)(11)(ii) of this section.

(F) For declared subcomponents that have no DRVs or RDIs, a symbol (*e.g.*, an asterisk) shall be placed in the ''Percent Daily Value'' column that shall refer to the same symbol that is placed at the bottom of the nutrition label, below the last heavy bar and inside the box, and followed by a statement ''Daily Value not established.''

(G) When calories or calories from saturated fat are declared, the space under the ''% DV'' column shall be left blank for these items. When there are no other (b)(2)-dietary ingredients listed for which a value must be declared in the ''% DV'' column, the column may be omitted as shown in paragraph (e)(11)(vii) of this section. When the ''% DV'' column is not required, but the dietary ingredients listed are subject to paragraph (b)(2)(iii)(F) of this section, the symbol required in that paragraph shall immediately follow the quantitative amount by weight for each dietary ingredient listed under ''Amount Per Serving.''

(3) *Information on dietary ingredients for which RDI's and DRV's have not been established.* (i) Dietary ingredients for which FDA has not established RDI's or DRV's and that are not subject to regulation under paragraph (b)(2) of this section (hereinafter referred to as ''other dietary ingredients'') shall be declared by their common or usual name when they are present in a dietary supplement, in a column that is under the column of names described in paragraph (b)(2)(i)(B) of this section or, as long as the constituents of an other dietary ingredient are not listed, in a linear display, under the heavy bar described in paragraph (e)(6) of this section, except that if no (b)(2)-dietary ingredients are declared, other dietary ingredients shall be declared directly beneath the heading ''Amount Per Serving'' described in paragraph (b)(2)(i)(A) of this section.

(ii) The quantitative amount by weight per serving of other dietary ingredients shall be presented in the same manner as the corresponding information required in paragraph (b)(2)(ii) of this section or, when a linear display is used, shall be presented immediately following the name of the other dietary ingredient. The quantitative amount by weight shall be the weight of the other dietary ingredient listed and not the weight of any component, or the source, of that dietary ingredient.

(A) These amounts shall be expressed using metric measures in appropriate units.

(B) For any dietary ingredient that is a liquid extract from which the solvent has not been removed, the quantity listed shall be the volume or weight of the total extract. Information on the condition of the starting material shall be indicated when it is fresh and may be indicated when it is dried. Information may be included on the concentration of the dietary ingredient and the solvent used, e.g., ''fresh dandelion root extract, x (y:z) in 70% ethanol,'' where x is the number of milliliters (mL) or mg of the entire extract, y is the weight of the starting material and z is the volume (mL) of solvent. Where the solvent has been partially removed (not to dryness), the final concentration, when indicated, shall be stated (e.g., if the original extract was 1:5 and 50 percent of the solvent was removed, then the final concentration shall be stated as 1:2.5). Where the name of the solvent used is not included in the nutrition label, it is required to be listed in the ingredient statement in accordance with § 101.4(g).

(C) For a dietary ingredient that is an extract from which the solvent has been removed, the weight of the ingredient shall be the weight of the dried extract.

(iii) The constituents of a dietary ingredient described in paragraph (b)(3)(i) of this section may be listed indented under the dietary ingredient and followed by their quantitative amounts by weight per serving, except that dietary ingredients described in paragraph (b)(2) of this section shall be listed in accordance with that section. When the constituents of a dietary ingredient described in paragraph (b)(3)(i) of this section are listed, all other dietary ingredients shall be declared in a column; however, the constituents themselves may be declared in a column or in a linear display.

(iv) Other dietary ingredients shall bear a symbol (e.g., an asterisk) in the column under the heading of ''% Daily Value'' that refers to the same symbol

placed at the bottom of the nutrition label and followed by the statement ''Daily Value not established,'' except that when the heading ''% Daily Value'' is not used, the symbol shall follow the quantitative amount by weight for each dietary ingredient listed.

(c) A proprietary blend of dietary ingredients shall be included in the list of dietary ingredients described in paragraph (b)(3)(i) of this section and identified by the term ''Proprietary Blend'' or other appropriately descriptive term or fanciful name and may be highlighted by bold type. Except as specified in this paragraph, all other requirements for the listing of dietary ingredients in dietary supplements are applicable.

(1) Dietary ingredients contained in the proprietary blend that are listed under paragraph (b)(2) of this section shall be declared in accordance with paragraph (b)(2) of this section.

(2) Dietary ingredients contained in the proprietary blend that are listed under paragraph (b)(3) of this section (i.e., ''other dietary ingredients'') shall be declared in descending order of predominance by weight, in a column or linear fashion, and indented under the term ''Proprietary Blend'' or other appropriately descriptive term or fanciful name.

(3) The quantitative amount by weight specified for the proprietary blend shall be the total weight of all other dietary ingredients contained in the proprietary blend and shall be placed on the same line to the right of the term ''Proprietary Blend'' or other appropriately descriptive term or fanciful name underneath the column of amounts described in paragraph (b)(2)(ii) of this section. A symbol (e.g., asterisk), which refers to the same symbol placed at the bottom of the nutrition label that is followed by the statement ''Daily Value not established,'' shall be placed under the heading ''% Daily Value,'' if present, or immediately following the quantitative amount by weight for the proprietary blend.

(4) The sample label shown in paragraph (e)(11)(v) of this section illustrates one method of nutrition labeling a proprietary blend of dietary ingredients.

(d) The source ingredient that supplies a dietary ingredient may be identified within the nutrition label in parentheses immediately following or indented beneath the name of a dietary ingredient and preceded by the words ''as'' or ''from'', e.g., ''Calcium (as calcium carbonate),'' except that manner of presentation is unnecessary when the name of the dietary ingredient (e.g., Oriental ginseng) or its synonym (e.g., ascorbic acid) is itself the source ingredient. When a source ingredient is identified in parentheses within the nutrition label, or when the name of the dietary ingredient or its synonym is the source ingredient, it shall not be required to be listed again in the ingredient statement that appears outside of the nutrition label. When a source ingredient is not identified within the nutrition label, it shall be listed in an ingredient statement in accordance with §101.4(g), which shall appear outside and immediately below the nutrition label or, if there is insufficient space below the nutrition label, immediately contiguous and to the right of the nutrition label.

(1) Source ingredients shall be identified in accordance with §101.4 (i.e., shall be listed by common or usual name, and the listing of botanicals shall specify the part of the plant from which the ingredient is derived) regardless of whether they are listed in an ingredient statement or in the nutrition label.

(2) When source ingredients are listed within the nutrition label, and two or more are used to provide a single dietary ingredient, all of the sources shall be listed within the parentheses in descending order by weight.

(3) Representations that the source ingredient conforms to an official compendium may be included either in the nutrition label or in the ingredient list (e.g., ''Calcium (as calcium carbonate USP)'').

(e) Except as provided for small and intermediate sized packages under paragraph (h)(3)(i)(2) of this section, information other than the title, headings, and footnotes shall be in uniform type size no smaller than 8 point. Type size no smaller than 6 point may be

used for column headings (*e.g.*, ''Amount Per Serving'' and ''% Daily Value'') and for footnotes (*e.g.*, ''Percent Daily Values are based on a 2,000 calorie diet'').

(1) The title, ''Supplement Facts,'' shall be set in a type size larger than all other print size in the nutrition label and, unless impractical, shall be set full width of the nutrition label. The title and all headings shall be bolded to distinguish them from other information.

(2) The nutrition information shall be enclosed in a box by using hairlines.

(3) All information within the nutrition label shall utilize:

(i) A single easy-to-read type style,

(ii) All black or one color type, printed on a white or other neutral contrasting background whenever practical,

(iii) Upper- and lowercase letters, except that all uppercase lettering may be utilized for packages that have a total surface area available to bear labeling of less than 12 square inches,

(iv) At least one point leading (i.e., space between lines of text), and

(v) Letters that do not touch.

(4) Except as provided for small and intermediate-sized packages under paragraph (i)(2) of this section, information other than the title, headings, and footnotes shall be in uniform type size no smaller than 8 point. Type size no smaller than 6 point may be used for column headings (e.g., ''Amount Per Serving'' and ''% Daily Value'') and for footnotes (e.g., ''Percent Daily Values are based on a 2,000 calorie diet'').

(5) A hairline rule that is centered between the lines of text shall separate each dietary ingredient required in paragraph (b)(2) and (b)(3) of this section from the dietary ingredient above and beneath it, as shown in paragraph (e)(10) of this section.

(6) A heavy bar shall be placed:

(i) Beneath the subheading ''Servings Per Container'' except that if ''Servings Per Container'' is not required and, as a result, not declared, the bar shall be placed beneath the subheading ''Serving Size,''

(ii) Beneath the last dietary ingredient to be listed under paragraph (b)(2)(i) of this section, if any, and

(iii) Beneath the last other dietary ingredient to be listed under paragraph (b)(3) of this section, if any.

(7) A light bar shall be placed beneath the headings ''Amount Per Serving'' and ''% Daily Value.''

(8) If the product contains two or more separately packaged dietary supplements that differ from each other (*e.g.*, the product has a packet of supplements to be taken in the morning and a different packet to be taken in the afternoon), the quantitative amounts and percent of Daily Value may be presented as specified in this paragraph in individual nutrition labels or in one aggregate nutrition label as illustrated in paragraph (e)(11)(iii) of this section.

(9)(i) The quantitative amount by weight (or volume, if permitted) and the percent of Daily Value of each dietary ingredient may be presented on a ''per unit'' basis in addition to the ''per serving'' basis required by paragraphs (b)(2)(ii) and (b)(2)(iii) of this section for (b)(2)-dietary ingredients and (b)(3)(ii) and (b)(3)(iv) of this section for other dietary ingredients. If ''per unit'' information is provided, it must be presented in additional columns to the right of the ''per serving'' information and be clearly identified by appropriate headings.

(ii) Alternatively, if a recommendation is made in other parts of the label that a dietary supplement be consumed more than once per day, the total quantitative amount by weight (or volume, if permitted) and the percent of Daily Value of each dietary ingredient may be presented on a ''per day'' basis in addition to the ''per serving'' basis required by paragraphs (b)(2)(ii) and (b)(2)(iii) of this section for (b)(2)-dietary ingredients and (b)(3)(ii) and (b)(3)(iv) of this section for other dietary ingredients. If ''per day'' information is provided, it must be presented in additional columns to the right of the ''per serving'' information and be clearly identified by appropriate headings and/or be presented in a parenthetical statement as part of the ''Serving Size'' declaration. A sample illustration for ''per day'' information in a column format is provided in paragraph

(e)(11)(viii) of this section. As illustrated, the additional ''Per Day'' column heading is followed parenthetically by the number of servings recommended per day in other parts of the label (e.g., ''Per Day (3 Caplets)''). When the parenthetical statement format following the ''Serving Size'' declaration is used as an alternative to the column format, the statement must provide no more than simple instructions regarding how to calculate the ''per day'' amount for the number of servings per day recommended in other parts of the label (e.g., ''Serving Size: 1 Caplet (Multiply amounts by 3 for total daily amount)''). When the parenthetical statement format following the ''Serving Size'' declaration is used in addition to the column format, the statement must provide no more than a simple declaration of the number of servings recommended in other parts of the label (e.g., ''Serving Size: 1 Caplet (Total daily amount: 3 caplets per day)'').

(10) In the interest of uniformity of presentation, FDA urges that the information be presented using the graphic specifications set forth in appendix B to part 101, as applicable.

(11) The following sample labels are presented for the purpose of illustration:

(i) Multiple vitamins (Includes voluntary listing of vitamin D in IUs)

Supplement Facts

Serving Size 1 Gelcap
Servings Per Container 100

	Amount Per Serving	% Daily Value
Vitamin A (as retinyl acetate and 50% as beta-carotene)	900 mcg	100%
Vitamin C (as ascorbic acid)	90 mg	100%
Vitamin D (as cholecalciferol)	20 mcg (800 IU)	100%
Vitamin E (as dl-alpha tocopheryl acetate)	15 mg	100%
Thiamin (as thiamin mononitrate)	1.2 mg	100%
Riboflavin	1.3 mg	100%
Niacin (as niacinamide)	16 mg	100%
Vitamin B_6 (as pyridoxine hydrochloride)	1.7 mg	100%
Folate	400 mcg DFE (240 mcg folic acid)	100%
Vitamin B_{12} (as cyanocobalamin)	2.4 mcg	100%
Biotin	3 mcg	10%
Pantothenic Acid (as calcium pantothenate)	5 mg	100%

Other ingredients: Gelatin, lactose, magnesium stearate, microcrystalline cellulose, FD&C Yellow No. 6, propylene glycol, preservatives (propylparaben and sodium benzoate).

(ii) Multiple vitamins for children and adults (excludes Servings Per Container which is stated in the net quantity of contents declaration):

Supplement Facts

Serving Size 1 Tablet

Amount Per Serving		% Daily Value for Children 1 through 3 Years of Age	% Daily Value for Adults and Children 4 or more Years of Age
Calories	5		
Total Carbohydrate	1 g	<1%**	<1%*
Total Sugars	1 g	†	†
Includes 1g Added Sugars		4%**	2%*
Vitamin A (50% as beta-carotene)	450 mcg	150%	50%
Vitamin C	60 mg	400%	67%
Vitamin D	20 mcg	133%	100%
Vitamin E	8 mg	133%	53%
Thiamin	0.9 mg	180%	75%
Riboflavin	0.9 mg	180%	69%
Niacin	11.2 mg	187%	70%
Vitamin B_6	0.9 mg	180%	53%
Folate	300 mcg DFE (180 mcg folic acid)	200%	75%
Vitamin B_{12}	2.0 mcg	222%	83%

* Percent Daily Values are based on a 2,000 calorie diet.
** Percent Daily Values are based on a 1,000 calorie diet.
† Daily Value not established.

Other ingredients: Sugar, sodium ascorbate, gelatin, maltodextrin, dl-alpha tocopheryl acetate, niacinamide, magnesium stearate, Yellow 6, artificial colors, stearic acid, palmitic acid, artificial flavors, pyridoxine hydrochloride, thiamin mononitrate, vitamin A acetate, cholecalciferol, and cyanocobalamin.

(iii) Multiple vitamins in packets (includes voluntary listing of vitamin D in IUs)

Supplement Facts

Serving Size 1 Packet
Servings Per Container 10

	AM Packet		PM Packet	
Amount Per Serving		% Daily Value		% Daily Value
Vitamin A	450 mcg	50%	450 mcg	50%
Vitamin C	90 mg	100%	90 mg	100%
Vitamin D	20 mcg (800 IU)	100%		
Vitamin E	15 mg	100%		
Thiamin	1.2 mg	100%	1.2 mg	100%
Riboflavin	1.3 mg	100%	1.3 mg	100%
Niacin	16 mg	100%	16 mg	100%
Vitamin B_6	1.7 mg	100%	1.7 mg	100%
Folate	200 mcg DFE (120 mcg folic acid)	50%	200 mcg DFE (120 mcg folic acid)	50%
Vitamin B_{12}	1.2 mcg	50%	1.2 mcg	50%
Biotin			3 mcg	10%
Pantothenic Acid	2.5 mg	50%	2.5 mg	50%

Ingredients: Sodium ascorbate, ascorbic acid, calcium pantothenate, niacinamide, dl-alpha tocopheryl acetate, microcrystalline cellulose, dextrin, starch, mono- and diglycerides, vitamin A acetate, magnesium stearate, gelatin, FD&C Blue #1, FD&C Red #3, artificial colors, thiamin mononitrate, pyridoxine hydrochloride, citric acid, lactose, sorbic acid (preservative), tricalcium phosphate, sodium benzoate (preservative), sodium caseinate, preservatives (methylparaben, potassium sorbate, BHA, BHT), ergocalciferol, cyanocobalamin, and artificial flavors.

(iv) Dietary supplement containing dietary ingredients with and without RDIs and DRVs:

Supplement Facts

Serving Size 1 Capsule
Servings Per Container 100

Amount Per Capsule	% Daily Value
Calories 20	
Total Fat 2 g	3%*
Saturated Fat 0.5 g	3%*
Polyunsaturated Fat 1 g	†
Monounsaturated Fat 0.5 g	†
Vitamin A 765 mcg	85%
Vitamin D 21 mcg	105%
Omega-3 fatty acids 0.5 g	†

* Percent Daily Values are based on a 2,000 calorie diet.
† Daily Value not established.

Ingredients: Cod liver oil, gelatin, water, and glycerin.

(v) A proprietary blend of dietary ingredients

Supplement Facts

Serving Size 1 tsp (3g) (makes 8 fl oz prepared)
Servings Per Container 24

	Amount Per Teaspoon	% Daily Value
Calories	10	
Total Carbohydrate	2 g	<1%*
Total Sugars	2 g	†
Includes 2g Added Sugars		4%*
Proprietary Blend	0.7 g	
German Chamomile (flower)		†
Hyssop (leaf)		†

* Percent Daily Values are based on a 2,000 calorie diet.
† Daily Value not established.

Other ingredients: Fructose, lactose, starch, and stearic acid.

(vi) Dietary supplement of an herb

Supplement Facts

Serving Size 1 Capsule
Servings Per Container 100

Amount Per Capsule	
Oriental Ginseng, powdered (root)	250 mcg*

* Daily Value not established.

Other ingredients: Gelatin, water, and glycerin.

(vii) Dietary supplement of amino acids

Supplement Facts

Serving Size 1 Tablet
Servings Per Container 50

Amount Per Tablet	
Calories	15
Isoleucine (as L-isoleucine hydrochloride)	450 mg*
Leucine (as L-leucine hydrochloride)	620 mg*
Lysine (as L-lysine hydrochloride)	500 mg*
Methionine (as L-methionine hydrochloride)	350 mg*
Cystine (as L-cystine hydrochloride)	200 mg*
Phenylalanine (as L-phenylalanine hydrochloride)	220 mg*
Tyrosine (as L-tyrosine hydrochloride)	900 mg*
Threonine (as L-threonine hydrochloride)	300 mg*
Valine (as L-valine hydrochloride)	650 mg*

* Daily Value not established

Other ingredients: Cellulose, lactose, and magnesium stearate.

(12) If space is not adequate to list the required information as shown in the sample labels in paragraph (e)(11) of this section, the list may be split and continued to the right as long as the headings are repeated. The list to the right must be set off by a line that distinguishes it and sets it apart from the dietary ingredients and percent of Daily Value information given to the left. The following sample label illustrates this display:

Supplement Facts

Serving Size 1 Packet
Servings Per Container 10

Amount Per Packet		% Daily Value	Amount Per Packet		% Daily Value
Vitamin A (from cod liver oil)	900 mcg	100%	Magnesium (as magnesium oxide)	63 mg	15%
Vitamin C (as ascorbic acid)	250 mg	278%	Zinc (as zinc oxide)	11 mg	100%
Vitamin D (as ergocalciferol)	20 mcg	100%	Selenium (as sodium selenate)	25 mcg	45%
Vitamin E (as dl-alpha tocopherol)	75 mg	500%	Copper (as cupric oxide)	0.5 mg	56%
Thiamin (as thiamin mononitrate)	60 mg	5000%	Manganese (as manganese sulfate)	5 mg	217%
Riboflavin	60 mg	4615%	Chromium (as chromium chloride)	50 mcg	143%
Niacin (as niacinamide)	60 mg	375%	Molybdenum (as sodium molybdate)	50 mcg	111%
Vitamin B_6 (as pyridoxine hydrochloride)	60 mg	3529%	Potassium (as potassium chloride)	200 mg	4%
Folate	400 mcg DFE (240 mcg folic acid)	100%	Betaine (as betaine hydrochloride)	25 mg	*
Vitamin B_{12} (as cyanocobalamin)	100 mcg	4167%	Glutamic Acid (as L-glutamic acid)	25 mg	*
Biotin	100 mcg	333%	Inositol (as inositol monophosphate)	75 mg	*
Pantothenic Acid (as calcium pantothenate)	60 mg	1200%	*para*-Aminobenzoic acid	30 mg	*
Choline (as choline chloride)	100 mg	18%	Deoxyribonucleic acid	50 mg	*
Calcium (from oystershell)	130 mg	10%	Boron	500 mcg	*
Iron (as ferrous fumarate)	10 mg	56%			
Iodine (from kelp)	150 mcg	100%			

* Daily Value not established.

Other ingredients: Cellulose, stearic acid, and silica.

(f)(1) Compliance with this section will be determined in accordance with § 101.9(g)(1) through (g)(8), (g)(10), and (g)(11), except that the sample for analysis shall consist of a composite of 12 subsamples (consumer packages) or 10 percent of the number of packages in the same inspection lot, whichever is smaller, randomly selected to be representative of the lot. The criteria on class I and class II nutrients given in § 101.9(g)(3) and (g)(4) also are applicable to other dietary ingredients described in paragraph (b)(3)(i) of this section. Reasonable excesses over labeled amounts are acceptable within current good manufacturing practice.

(2) When it is not technologically feasible, or some other circumstance makes it impracticable, for firms to comply with the requirements of this section, FDA may permit alternative means of compliance or additional exemptions to deal with the situation in accordance with § 101.9(g)(9). Firms in need of such special allowances shall make their request in writing to the Office of Nutrition and Food Labeling (HFS–800), Food and Drug Administration, 5001 Campus Dr., College Park, MD 20740.

(g) Except as provided in paragraphs (i)(2) and (i)(5) of this section, the location of nutrition information on a label shall be in compliance with § 101.2.

(h) Dietary supplements are subject to the exemptions specified as follows in:

(1) Section 101.9(j)(1) for foods that are offered for sale by a person who makes direct sales to consumers (i.e., a retailer) who has annual gross sales or business done in sales to consumers that is not more than $500,000 or has annual gross sales made or business done in sales of food to consumers of not more than $50,000, and whose labels, labeling, and advertising do not provide nutrition information or make a nutrient content or health claim;

(2) Section 101.9(j)(18) for foods that are low-volume products (that is, they meet the requirements for units sold in § 101.9(j)(18)(i) or (j)(18)(ii)); that, except

as provided in §101.9(j)(18)(iv), are the subject of a claim for an exemption that provides the information required under §101.9(j)(18)(iv), that is filed before the beginning of the time period for which the exemption is claimed, and that is filed by a person, whether it is the manufacturer, packer, or distributor, that qualifies to claim the exemption under the requirements for average full-time equivalent employees in §101.9(j)(18)(i) or (j)(18)(ii), and whose labels, labeling, and advertising do not provide nutrition information or make a nutrient content or health claim;

(3) Section 101.9(j)(9) for foods shipped in bulk form that are not for distribution to consumers in such form and that are for use solely in the manufacture of other dietary supplements or that are to be processed, labeled, or repacked at a site other than where originally processed or packed.

(i)(1) Dietary supplements are subject to the special labeling provisions specified in §101.9(j)(5)(i) for foods other than infant formula, represented or purported to be specifically for infants through 12 months of age and children 1 through 3 years of age.

(2) Section 101.9(j)(13) for foods in small or intermediate-sized packages, except that:

(i) All information within the nutrition label on small-sized packages, which have a total surface area available to labeling of less than 12 square inches, shall be in type size no smaller than 4.5 point;

(ii) All information within the nutrition label on intermediate-sized packages, which have from 12 to 40 square inches of surface area available to bear labeling, shall be in type size no smaller than 6 point, except that type size no smaller than 4.5 point may be used on packages that have less than 20 square inches available for labeling and more than 8 dietary ingredients to be listed and on packages that have 20 to 40 square inches available for labeling and more than 16 dietary ingredients to be listed.

(iii) When the nutrition information is presented on any panel under §101.9(j)(13)(ii)(D), the ingredient list shall continue to be located immediately below the nutrition label, or, if there is insufficient space below the nutrition label, immediately contiguous and to the right of the nutrition label as specified in §101.4(g).

(iv) When it is not possible for a small or intermediate-sized package that is enclosed in an outer package to comply with these type size requirements, the type size of the nutrition label on the primary (inner) container may be as small as needed to accommodate all of the required label information provided that the primary container is securely enclosed in outer packaging, the nutrition labeling on the outer packaging meets the applicable type size requirements, and such outer packaging is not intended to be separated from the primary container under conditions of retail sale.

(v) Where there is not sufficient space on a small or intermediate-sized package for a nutrition label that meets minimum type size requirements of 4.5 points if hairlines are used in accordance with paragraph (e)(5) of this section, the hairlines may be omitted and replaced by a row of dots connecting the columns containing the name of each dietary ingredient and the quantitative amounts (by weight and as a percent of Daily Value).

(3) Section 101.9(j)(15) for foods in multiunit food containers;

(4) Section 101.9(j)(16) for foods sold in bulk containers; and

(5) Section 101.9(j)(17) for foods in packages that have a total surface area available to bear labeling greater than 40 square inches but whose principal display panel and information panel do not provide sufficient space to accommodate all required label information, except that the ingredient list shall continue to be located immediately below the nutrition label, or, if there is insufficient space below the nutrition label, immediately contiguous and to the right of the nutrition label as specified in §101.4(g).

(j) Dietary supplements shall be subject to the misbranding provisions of §101.9(k).

[62 FR 49849, Sept. 23, 1997, as amended at 63 FR 30620, June 5, 1998; 66 FR 56035, Nov. 6, 2001; 71 FR 51726, Aug. 31, 2006; 71 FR 74791, Dec. 13, 2006; 81 FR 33994, May 27, 2016; 83 FR 65502, Dec. 21, 2018]

§ 101.42 Nutrition labeling of raw fruit, vegetables, and fish.

(a) The Food and Drug Administration (FDA) urges food retailers to provide nutrition information, as provided in § 101.9(c), for raw fruit, vegetables, and fish at the point-of-purchase. If retailers choose to provide such information, they should do so in a manner that conforms to the guidelines in § 101.45.

(b) In § 101.44, FDA has listed the 20 varieties of raw fruit, vegetables, and fish that are most frequently consumed during a year and to which the guidelines apply.

(c) FDA has also defined in § 101.43, the circumstances that constitute substantial compliance by food retailers with the guidelines.

(d) By May 8, 1993, FDA will issue a report on actions taken by food retailers to provide consumers with nutrition information for raw fruit, vegetables, and fish under the guidelines established in § 101.45.

(1) The report will include a determination of whether there is substantial compliance, as defined in § 101.43, with the guidelines.

(2) In evaluating substantial compliance, FDA will consider only the 20 varieties of raw fruit, vegetables, and fish most frequently consumed as identified in § 101.44.

(e) If FDA finds that there is substantial compliance with the guidelines for the nutrition labeling of raw fruit and vegetables or of fish, the agency will so state in the report, and the guidelines will remain in effect. FDA will reevaluate the market place for substantial compliance every 2 years.

(f) If FDA determines that there is not substantial compliance with the guidelines for raw fruit and vegetables or for raw fish, the agency will at that time issue proposed regulations requiring that any person who offers raw fruit and vegetables or fish to consumers provide, in a manner prescribed by regulations, the nutrition information required by § 101.9. Final regulations would have to be issued 6 months after issuance of proposed regulations, and they would become effective 6 months after the date of their promulgation.

§ 101.43 Substantial compliance of food retailers with the guidelines for the voluntary nutrition labeling of raw fruit, vegetables, and fish.

(a) The Food and Drug Administration (FDA) will judge a food retailer who sells raw agricultural commodities or raw fish to be in compliance with the guidelines in § 101.45 with respect to raw agricultural commodities if the retailer displays or provides nutrition labeling for at least 90 percent of the raw agricultural commodities listed in § 101.44 that it sells, and with respect to raw fish if the retailer displays or provides nutrition labeling for at least 90 percent of the types of raw fish listed in § 101.44 that it sells. To be in compliance, the nutrition labeling shall:

(1) Be presented in the store or other type of establishment in a manner that is consistent with § 101.45(a)(1);

(2) Be presented in content and format that are consistent with § 101.45 (a)(2), (a)(3), and (a)(4); and

(3) Include data that have been provided by FDA in appendices C and D to part 101 of this chapter, except that the information on potassium is voluntary.

(b) To determine whether there is substantial compliance by food retailers with the guidelines in § 101.45 for the voluntary nutrition labeling of raw fruit and vegetables and of raw fish, FDA will select a representative sample of 2,000 stores, allocated by store type and size, for raw fruit and vegetables and for raw fish.

(c) FDA will find that there is substantial compliance with the guidelines in § 101.45 if it finds based on paragraph (a) of this section that at least 60 percent of all stores that are evaluated are in compliance.

(d) FDA will evaluate substantial compliance separately for raw agricultural commodities and for raw fish.

[55 FR 60890, Nov. 27, 1991, as amended at 61 FR 42759, Aug. 16, 1996]

§ 101.44 What are the 20 most frequently consumed raw fruits, vegetables, and fish in the United States?

(a) The 20 most frequently consumed raw fruits are: Apple, avocado (California), banana, cantaloupe, grapefruit, grapes, honeydew melon, kiwifruit, lemon, lime, nectarine, orange, peach,

pear, pineapple, plums, strawberries, sweet cherries, tangerine, and watermelon.

(b) The 20 most frequently consumed raw vegetables are: Asparagus, bell pepper, broccoli, carrot, cauliflower, celery, cucumber, green (snap) beans, green cabbage, green onion, iceberg lettuce, leaf lettuce, mushrooms, onion, potato, radishes, summer squash, sweet corn, sweet potato, and tomato.

(c) The 20 most frequently consumed raw fish are: Blue crab, catfish, clams, cod, flounder/sole, haddock, halibut, lobster, ocean perch, orange roughy, oysters, pollock, rainbow trout, rockfish, salmon (Atlantic/coho/Chinook/sockeye, chum/pink), scallops, shrimp, swordfish, tilapia, and tuna.

[71 FR 42044, July 25, 2006]

§ 101.45 Guidelines for the voluntary nutrition labeling of raw fruits, vegetables, and fish.

(a) Nutrition labeling for raw fruits, vegetables, and fish listed in § 101.44 should be presented to the public in the following manner:

(1) Nutrition labeling information should be displayed at the point of purchase by an appropriate means such as by a label affixed to the food or through labeling including shelf labels, signs, posters, brochures, notebooks, or leaflets that are readily available and in close proximity to the foods. The nutrition labeling information may also be supplemented by a video, live demonstration, or other media.

(2) Serving sizes should be determined, and nutrients declared, in accordance with § 101.9 (b) and (c), respectively, except that the nutrition labeling data should be based on the raw edible portion for fruits and vegetables and on the cooked edible portion for fish. The methods used to cook fish should be those that do not add fat, breading, or seasoning (e.g., salt or spices).

(3) When nutrition labeling information is provided for more than one raw fruit, vegetable, or fish on signs, posters, brochures, notebooks, or leaflets, it may be presented in charts with horizontal or vertical columns or as a compilation of individual nutrition labels. Nutrition labeling that is presented in a linear display (see § 101.9(j)(13)(ii)(A)(*2*)) will not be considered to be in compliance. The heading ''Nutrition Facts'' must be in a type size larger than all other print in the nutrition label. The required information (i.e., headings, serving sizes, list of nutrients, quantitative amounts by weight (except for vitamins and minerals), and percent of Daily Values (DV's) (except for sugars and protein) must be clearly presented and of sufficient type size and color contrast to be plainly legible, with numeric values for percent of DV highlighted in contrast to the quantitative amounts by weight and hairlines between all nutrients.

(i) Declaration of the number of servings per container need not be included in the nutrition labeling of raw fruits, vegetables, and fish.

(ii) Except for the statement ''Percent Daily Values are based on a 2,000 calorie diet,'' the footnote required in § 101.9(d)(9) is not required. However, when labeling is provided in brochures, notebooks, leaflets, or similar types of materials, retailers are encouraged to include the footnote.

(iii) When retailers provide nutrition labeling information for more than one raw fruit or vegetable on signs or posters or in brochures, notebooks, or leaflets, the listings for saturated fat, *trans* fat, and cholesterol may be omitted from the charts or individual nutrition labels if a footnote states that most fruits and vegetables provide negligible amounts of these nutrients, but that avocados contain 0.5 gram (g) of saturated fat per ounce (e.g., ''Most fruits and vegetables provide negligible amounts of saturated fat, *trans* fat, and cholesterol; avocados provide 0.5 g of saturated fat per ounce''). The footnote also may contain information about the polyunsaturated and monounsaturated fat content of avocados.

(iv) When retailers provide nutrition labeling information for more than one raw fish on signs or posters or in brochures, notebooks, or leaflets, the listings for *trans* fat, dietary fiber, and sugars may be omitted from the charts or individual nutrition labels if the following footnote is used, ''Fish provide negligible amounts of *trans* fat, dietary fiber, and sugars.''

(4) When nutrition labeling is provided for individual raw fruits, vegetables, or fish on packages or on signs, posters, brochures, notebooks, or leaflets, it should be displayed in accordance with § 101.9, except that the declaration of the number of servings per container need not be included. For individual labels provided by retailers on signs and posters, the footnote required in § 101.9(d)(9) may be shortened to ''Percent Daily Values are based on a 2,000 calorie diet.''

(b) Nutrition label values provided by the Food and Drug Administration (FDA) in Appendices C and D to part 101 for the 20 most frequently consumed raw fruits, vegetables, and fish listed in § 101.44 shall be used to ensure uniformity in declared values. FDA will publish proposed updates of the 20 most frequently consumed raw fruits, vegetables, and fish and nutrition label data for these foods (or a notice that the data sets have not changed from the previous publication) at least every 4 years in the FEDERAL REGISTER.

(1) The agency encourages the submission of data bases with new or additional nutrient data for any of the most frequently consumed raw fruits, vegetables, and fish to the Office of Nutritional Products, Labeling and Dietary Supplements (HFS–800), Center for Food Safety and Applied Nutrition, Food and Drug Administration, 5001 Campus Dr., College Park, MD 20740, for review and evaluation. FDA may incorporate these data in the next revision of the nutrition labeling information for the top 20 raw fruits, vegetables, and fish.

(i) Guidance in the development of data bases may be found in the ''FDA Nutrition Labeling Manual: A Guide for Developing and Using Data Bases,'' available from the FDA Office of Food Labeling.

(ii) The submission to FDA should include, but need not be limited to, information on the following: Source of the data (names of investigators, name of organization, place of analyses, dates of analyses), number of samples, sampling design, analytical methods, and statistical treatment of the data. Proposed quantitative label declarations may be included. The proposed values for declaration should be determined in accordance with the ''FDA Nutrition Labeling Manual: A Guide for Developing and Using Data Bases.''

(2) [Reserved]

(c) Data bases of nutrient values for raw fruits, vegetables, and fish that are not among the 20 most frequently consumed may be used to develop nutrition labeling values for these foods. This includes data bases of nutrient values for specific varieties, species, or cultivars of raw fruits, vegetables, and fish not specifically identified among the 20 most frequently consumed.

(1) The food names and descriptions for the fruits, vegetables, and fish should clearly identify these foods as distinct from foods among the most frequently consumed list for which FDA has provided data.

(2) Guidance in the development of data bases may be found in the ''FDA Nutrition Labeling Manual: A Guide for Developing and Using Data Bases.''

(3) Nutrition labeling values computed from data bases are subject to the compliance provisions of § 101.9(g).

(i) Compliance with the provisions of § 101.9(g) may be achieved by use of a data base that has been developed following FDA guideline procedures and approved by FDA.

(A) The submission to FDA for approval should include but need not be limited to information on the following: Source of the data (names of investigators, name of organization, place of analyses, dates of analyses), number of samples, sampling design, analytical methods, statistical treatment of the data, and proposed quantitative label declarations. The values for declaration should be determined in accordance with the ''FDA Nutrition Labeling Manual: A Guide for Developing and Using Databases.''

(B) FDA approval of a data base and nutrition labeling values shall not be considered granted until the Center for Food Safety and Applied Nutrition has agreed to all aspects of the data base in writing. Approvals will be in effect for a limited time, e.g., 10 years, and will be eligible for renewal in the absence of significant changes in agricultural or industry practices (e.g., a change occurs in a predominant variety produced). FDA will take steps to revoke

its approval of the data base and nutrition labeling values if FDA monitoring suggests that the data base or nutrition labeling values are no longer representative of the item sold in this country. Approval requests shall be submitted in accordance with the provision of § 101.30 of this chapter.

(ii) [Reserved]

[61 FR 42760, Aug. 16, 1996, as amended at 66 FR 56035, Nov. 6, 2001; 71 FR 42044, July 25, 2006]

Subpart D—Specific Requirements for Nutrient Content Claims

SOURCE: 58 FR 2413, Jan. 6, 1993, unless otherwise noted.

§ 101.54 Nutrient content claims for "good source," "high," "more," and "high potency."

(a) *General requirements.* Except as provided in paragraph (e) of this section, a claim about the level of a nutrient in a food in relation to the Reference Daily Intake (RDI) established for that nutrient in § 101.9(c)(8)(iv) or Daily Reference Value (DRV) established for that nutrient in § 101.9(c)(9), (excluding total carbohydrates) may only be made on the label or in labeling of the food if:

(1) The claim uses one of the terms defined in this section in accordance with the definition for that term;

(2) The claim is made in accordance with the general requirements for nutrient content claims in § 101.13; and

(3) The food for which the claim is made is labeled in accordance with § 101.9, § 101.10, or § 101.36, as applicable.

(b) *''High'' claims.* (1) The terms ''high,'' ''rich in,'' or ''excellent source of'' may be used on the label and in the labeling of foods, except meal products as defined in § 101.13(l) and main dish products as defined in § 101.13(m), provided that the food contains 20 percent or more of the RDI or the DRV per reference amount customarily consumed.

(2) The terms defined in paragraph (b)(1) of this section may be used on the label and in the labeling of meal products as defined in § 101.13(l) and main dish products as defined in § 101.13(m), provided that:

(i) The product contains a food that meets the definition of ''high'' in paragraph (b)(1) of this section; and

(ii) The label or labeling clearly identifies the food that is the subject of the claim (e.g., the serving of broccoli in this product is high in vitamin C).

(c) *''Good Source'' claims.* (1) The terms ''good source,'' ''contains,'' or ''provides'' may be used on the label and in the labeling of foods, except meal products as defined in § 101.13(l) and main dish products as defined in § 101.13(m), provided that the food contains 10 to 19 percent of the RDI or the DRV per reference amount customarily consumed.

(2) The terms defined in paragraph (c)(1) of this section may be used on the label and in the labeling of meal products as defined in § 101.13(l) and main dish products as defined in 101.13(m), provided that:

(i) The product contains a food that meets the definition of ''good source'' in paragraph (c)(1) of this section; and

(ii) The label or labeling clearly identifies the food that is the subject of the claim (e.g., the serving of sweet potatoes in this product is a ''good source'' of fiber).

(d) *''Fiber'' claims.* (1) If a nutrient content claim is made with respect to the level of dietary fiber, that is, that the product is high in fiber, a good source of fiber, or that the food contains ''more'' fiber, and the food is not ''low'' in total fat as defined in § 101.62(b)(2) or, in the case of a meal product, as defined in § 101.13(l), or main dish product, as defined in § 101.13(m), is not ''low'' in total fat as defined in § 101.62(b)(3), then the label shall disclose the level of total fat per labeled serving.

(2) The disclosure shall appear in immediate proximity to such claim, be in a type size no less than one-half the size of the claim and precede any disclosure statement required under § 101.13(h) (e.g., ''contains [*x amount*] of total fat per serving. See nutrition information for fat content'').

(e) *''More'' claims.* (1) A relative claim using the terms ''more,'' ''fortified,'' ''enriched,'' ''added,'' ''extra,'' and ''plus'' may be used on the label or in labeling of foods to describe the level of protein, vitamins, minerals, dietary

fiber, or potassium, except as limited by § 101.13(j)(1)(i) and except meal products as defined in § 101.13(l) and main dish products as defined in § 101.13(m), provided that:

(i) The food contains at least 10 percent more of the RDI for vitamins or minerals or of the DRV for protein, dietary fiber, or potassium (expressed as a percent of the Daily Value) per reference amount customarily consumed than an appropriate reference food; and

(ii) Where the claim is based on a nutrient that has been added to the food, that fortification is in accordance with the policy on fortification of foods in § 104.20 of this chapter; and

(iii) As required in § 101.13(j)(2) for relative claims:

(A) The identity of the reference food and the percentage (or fraction) that the nutrient is greater relative to the RDI or DRV are declared in immediate proximity to the most prominent such claim (e.g., ''contains 10 percent more of the Daily Value for fiber than white bread''); and

(B) Quantitative information comparing the level of the nutrient in the product per labeled serving with that of the reference food that it replaces (e.g., ''Fiber content of white bread is 1 gram (g) per serving; (this product) 3.5 g per serving'') is declared adjacent to the most prominent claim or to the nutrition label, except that if the nutrition label is on the information panel, the quantitative information may be located elsewhere on the information panel in accordance with § 101.2.

(2) A relative claim using the terms ''more,'' ''fortified,'' ''enriched,'' ''added,'' ''extra,'' and ''plus'' may be used on the label or in labeling to describe the level of protein, vitamins, minerals, dietary fiber or potassium, except as limited in § 101.13(j)(1)(i), in meal products as defined in § 101.13(l) or main dish products as defined in § 101.13(m), provided that:

(i) The food contains at least 10 percent more of the RDI for vitamins or minerals or of the DRV for protein, dietary fiber, or potassium (expressed as a percent of the Daily Value) per 100 g of food than an appropriate reference food.

(ii) Where the claim is based on a nutrient that has been added to the food, that fortification is in accordance with the policy on fortification of foods in § 104.20 of this chapter; and

(iii) As required in § 101.13(j)(2) for relative claims:

(A) The identity of the reference food and the percentage (or fraction) that the nutrient was increased relative to the RDI or DRV are declared in immediate proximity to the most prominent such claim (e.g., ''contains 10 percent more of the Daily Value for fiber per 3 oz than does 'X brand of product' ''), and

(B) Quantitative information comparing the level of the nutrient in the product per specified weight with that of the reference food that it replaces (e.g., ''The fiber content of 'X brand of product' is 2 g per 3 oz. This product contains 4.5 g per 3 oz.'') is declared adjacent to the most prominent claim or to the nutrition label, except that if the nutrition label is on the information panel, the quantitative information may be located elsewhere on the information panel in accordance with § 101.2.

(f) *''High potency'' claims.* (1)(i) The term ''high potency'' may be used on the label or in the labeling of foods to describe individual vitamins or minerals that are present at 100 percent or more of the RDI per reference amount customarily consumed.

(ii) When the term ''high potency'' is used to describe individual vitamins or minerals in a product that contains other nutrients or dietary ingredients, the label or labeling shall clearly identify which vitamin or mineral is described by the term ''high potency'' (e.g., ''Botanical 'X' with high potency vitamin E'').

(2) The term ''high potency'' may be used on the label or in the labeling of a multiingredient food product to describe the product if the product contains 100 percent or more of the RDI for at least two-thirds of the vitamins and minerals that are listed in § 101.9(c)(8)(iv) and that are present in the product at 2 percent or more of the RDI (e.g., ''High potency multivitamin, multimineral dietary supplement tablets'').

(3) Where compliance with paragraphs (f)(1)(i), (f)(1)(ii), or (f)(2) of this section is based on a nutrient that has

been added to a food (other than a dietary supplement), that fortification shall be in accordance with the policy on fortification of foods in § 104.20 of this chapter.

(g) *Nutrient content claims using the term ''antioxidant.''* A nutrient content claim that characterizes the level of antioxidant nutrients present in a food may be used on the label or in the labeling of that food when:

(1) An RDI has been established for each of the nutrients;

(2) The nutrients that are the subject of the claim have recognized antioxidant activity; that is, when there exists scientific evidence that, following absorption from the gastrointestinal tract, the substance participates in physiological, biochemical, or cellular processes that inactivate free radicals or prevent free radical-initiated chemical reactions;

(3) The level of each nutrient that is the subject of the claim is sufficient to qualify for the § 101.54 (b), (c), or (e) claim (e.g., to bear the claim ''high in antioxidant vitamin C,'' the product must contain 20 percent or more of the RDI for vitamin C). Beta-carotene may be a subject of the claim when the level of vitamin A present as beta-carotene in the food that bears the claim is sufficient to qualify for the claim. For example, for the claim ''good source of antioxidant beta-carotene,'' 10 percent or more of the RDI for vitamin A must be present as beta-carotene per reference amount customarily consumed; and

(4) The names of the nutrients that are the subject of the claim are included as part of the claim (e.g., ''high in antioxidant vitamins C and E''). Alternatively, when used as part of a nutrient content claim, the term ''antioxidant'' or ''antioxidants'' (as in ''high in antioxidants'') may be linked by a symbol (e.g., an asterisk) that refers to the same symbol that appears elsewhere on the same panel of a product label followed by the name or names of the nutrients with recognized antioxidant activity. The list of nutrients shall appear in letters of a type size height no smaller than the larger of one-half of the type size of the largest nutrient content claim or 1/16 inch.

[58 FR 2413, Jan. 6, 1993; 58 FR 17342, Apr. 2, 1993, as amended at 59 FR 394, Jan. 4, 1994; 59 FR 15051, Mar. 31, 1994; 60 FR 17206, Apr. 5, 1995; 61 FR 11731, Mar. 22, 1996; 62 FR 31339, June 9, 1997; 62 FR 49867, 49880, Sept. 23, 1997; 63 FR 26980, May 15, 1998; 66 FR 17358, Mar. 30, 2001]

§ 101.56 Nutrient content claims for "light" or "lite."

(a) *General requirements.* A claim using the term *light* or *lite* to describe a food may only be made on the label or in labeling of the food if:

(1) The claim uses one of the terms defined in this section in accordance with the definition for that term;

(2) The claim is made in accordance with the general requirements for nutrient content claims in § 101.13; and

(3) The food is labeled in accordance with § 101.9 or § 101.10, where applicable.

(b) *''Light'' claims.* The terms ''light'' or ''lite'' may be used on the label or in the labeling of foods, except meal products as defined in § 101.13(l) and main dish products as defined in § 101.13(m), without further qualification, provided that:

(1) If the food derives 50 percent or more of its calories from fat, its fat content is reduced by 50 percent or more per reference amount customarily consumed compared to an appropriate reference food as specified in § 101.13(j)(1); or

(2) If the food derives less than 50 percent of its calories from fat:

(i) The number of calories is reduced by at least one-third (33⅓ percent) per reference amount customarily consumed compared to an appropriate reference food; or

(ii) Its fat content is reduced by 50 percent or more per reference amount customarily consumed compared to the reference food that it resembles or for which it substitutes as specified in § 101.13(j)(1); and

(3) As required in § 101.13(j)(2) for relative claims:

(i) The identity of the reference food and the percent (or fraction) that the calories and the fat were reduced are declared in immediate proximity to the most prominent such claim, (e.g., ''1/3 fewer calories and 50 percent less fat than our regular cheese cake'');

(ii) Quantitative information comparing the level of calories and fat content in the product per labeled serving size with that of the reference food that it replaces (e.g., ''lite cheesecake—200 calories, 4 grams (g) fat per serving; regular cheesecake—300 calories, 8 g fat per serving'') is declared adjacent to the most prominent claim or to the nutrition label, except that if the nutrition label is on the information panel, the quantitative information may be located elsewhere on the information panel in accordance with § 101.2; and

(iii) If the labeled food contains less than 40 calories or less than 3 g fat per reference amount customarily consumed, the percentage reduction for that nutrient need not be declared.

(4) A ''light'' claim may not be made on a food for which the reference food meets the definition of ''low fat'' and ''low calorie.''

(c)(1)(i) A product for which the reference food contains 40 calories or less and 3 g fat or less per reference amount customarily consumed may use the term ''light'' or ''lite'' without further qualification if it is reduced by 50 percent or more in sodium content compared to the reference food; and

(ii) As required in § 101.13(j)(2) for relative claims:

(A) The identity of the reference food and the percent (or fraction) that the sodium was reduced shall be declared in immediate proximity to the most prominent such claim (e.g., 50 percent less sodium than our regular soy sauce); and

(B) Quantitative information comparing the level of sodium per labeled serving size with that of the reference food that it replaces (e.g., ''lite soy sauce 500 milligrams (mg) sodium per serving; regular soy sauce 1,000 mg per serving'') is declared adjacent to the most prominent claim or to the nutrition label, except that if the nutrition label is on the information panel, the quantitative information may be located elsewhere on the information panel in accordance with § 101.2.

(2)(i) A product for which the reference food contains more than 40 calories or more than 3 g fat per reference amount customarily consumed may use the term ''light in sodium'' or ''lite in sodium'' if it is reduced by 50 percent or more in sodium content compared to the reference food, provided that ''light'' or ''lite'' is presented in immediate proximity with ''in sodium'' and the entire term is presented in uniform type size, style, color, and prominence; and

(ii) As required in § 101.13(j)(2) for relative claims:

(A) The identity of the reference food and the percent (or fraction) that the sodium was reduced shall be declared in immediate proximity to the most prominent such claim (e.g., 50 percent less sodium than our regular canned peas); and

(B) Quantitative information comparing the level of sodium per labeled serving size with that of the reference food that it replaces (e.g., ''lite canned peas, 175 mg sodium per serving; regular canned peas 350 mg per serving'') is declared adjacent to the most prominent claim or to the nutrition label, except that if the nutrition label is on the information panel, the quantitative information may be located elsewhere on the information panel in accordance with § 101.2.

(iii) Except for meal products as defined in § 101.13(l) and main dish products as defined in § 101.13(m), a ''light in sodium'' claim may not be made on a food for which the reference food meets the definition of ''low in sodium''.

(d)(1) The terms ''light'' or ''lite'' may be used on the label or in the labeling of a meal product as defined in § 101.13(l) and a main dish product as defined in § 101.13(m), provided that:

(i) The food meets the definition of:

(A) ''Low in calories'' as defined in § 101.60(b)(3); or

(B) ''Low in fat'' as defined in § 101.62(b)(3); and

(ii)(A) A statement appears on the principal display panel that explains whether ''light'' is used to mean ''low fat,'' ''low calories,'' or both (e.g., ''Light Delight, a low fat meal''); and

(B) The accompanying statement is no less than one-half the type size of the ''light'' or ''lite'' claim.

(2)(i) The term ''light in sodium'' or ''lite in sodium'' may be used on the label or in the labeling of a meal product as defined in § 101.13(l) and a main

dish product as defined in §101.13(m), provided that the food meets the definition of ''low in sodium'' as defined in §101.61(b)(5)(i); and

(ii) ''Light'' or ''lite'' and ''in sodium'' are presented in uniform type size, style, color, and prominence.

(e) Except as provided in paragraphs (b) through (d) of this section, the term ''light'' or ''lite'' may not be used to refer to a food that is not reduced in fat by 50 percent, or, if applicable, in calories by ⅓ or, when properly qualified, in sodium by 50 percent unless:

(1) It describes some physical or organoleptic attribute of the food such as texture or color and the information (e.g., ''light in color'' or ''light in texture'') so stated, clearly conveys the nature of the product; and

(2) The attribute (e.g., ''color'' or ''texture'') is in the same style, color, and at least one-half the type size as the word ''light'' and in immediate proximity thereto.

(f) If a manufacturer can demonstrate that the word ''light'' has been associated, through common use, with a particular food to reflect a physical or organoleptic attribute (e.g., light brown sugar, light corn syrup, or light molasses) to the point where it has become part of the statement of identity, such use of the term ''light'' shall not be considered a nutrient content claim subject to the requirements in this part.

(g) The term ''lightly salted'' may be used on a product to which has been added 50 percent less sodium than is normally added to the reference food as described in §101.13(j)(1)(i)(B) and (j)(1)(ii)(B), provided that if the product is not ''low in sodium'' as defined in §101.61(b)(4), the statement ''not a low sodium food,'' shall appear adjacent to the nutrition label of the food bearing the claim, or, if the nutrition label is on the information panel, it may appear elsewhere on the information panel in accordance with §101.2 and the information required to accompany a relative claim shall appear on the label or labeling as specified in §101.13(j)(2).

[58 FR 2413, Jan. 6, 1993; 58 FR 17342, Apr. 2, 1993, as amended at 60 FR 17206, Apr. 5, 1995]

§101.60 Nutrient content claims for the calorie content of foods.

(a) *General requirements.* A claim about the calorie or sugar content of a food may only be made on the label or in the labeling of a food if:

(1) The claim uses one of the terms defined in this section in accordance with the definition for that term;

(2) The claim is made in accordance with the general requirements for nutrient content claims in §101.13;

(3) The food for which the claim is made is labeled in accordance with §101.9, §101.10, or §101.36, as applicable; and

(4) For dietary supplements, claims regarding calories may not be made on products that meet the criteria in §101.60(b)(1) or (b)(2) for ''calorie free'' or ''low calorie'' claims except when an equivalent amount of a similar dietary supplement (e.g., another protein supplement) that the labeled food resembles and for which it substitutes, normally exceeds the definition for ''low calorie'' in §101.60(b)(2).

(b) *Calorie content claims.* (1) The terms ''calorie free,'' ''free of calories,'' ''no calories,'' ''zero calories,'' ''without calories,'' ''trivial source of calories,'' ''negligible source of calories,'' or ''dietarily insignificant source of calories'' may be used on the label or in the labeling of foods, provided that:

(i) The food contains less than 5 calories per reference amount customarily consumed and per labeled serving.

(ii) As required in §101.13(e)(2), if the food meets this condition without the benefit of special processing, alteration, formulation, or reformulation to lower the caloric content, it is labeled to disclose that calories are not usually present in the food (e.g., ''cider vinegar, a calorie free food'').

(2) The terms ''low calorie,'' ''few calories,'' ''contains a small amount of calories,'' ''low source of calories,'' or ''low in calories'' may be used on the label or in labeling of foods, except meal products as defined in §101.13(l) and main dish products as defined in §101.13(m), provided that:

(i)(A) The food has a reference amount customarily consumed greater than 30 grams (g) or greater than 2 tablespoons and does not provide more

than 40 calories per reference amount customarily consumed; or

(B) The food has a reference amount customarily consumed of 30 g or less or 2 tablespoons or less and does not provide more than 40 calories per reference amount customarily consumed and, except for sugar substitutes, per 50 g (for dehydrated foods that must be reconstituted before typical consumption with water or a diluent containing an insignificant amount, as defined in §101.9(f)(1), of all nutrients per reference amount customarily consumed, the per 50 g criterion refers to the ''as prepared'' form).

(ii) If a food meets these conditions without the benefit of special processing, alteration, formulation, or reformulation to vary the caloric content, it is labeled to clearly refer to all foods of its type and not merely to the particular brand to which the label attaches (e.g., ''celery, a low calorie food'').

(3) The terms defined in paragraph (b)(2) of this section may be used on the label or in labeling of meal products as defined in §101.13(l) or main dish products as defined in §101.13(m), provided that:

(i) The product contains 120 calories or less per 100 g; and

(ii) If the product meets this condition without the benefit of special processing, alteration, formulation, or reformulation to lower the calorie content, it is labeled to clearly refer to all foods of its type and not merely to the particular brand to which it attaches.

(4) The terms ''reduced calorie,'' ''reduced in calories,'' ''calorie reduced,'' ''fewer calories,'' ''lower calorie,'' or ''lower in calories'' may be used on the label or in the labeling of foods, except as limited by §101.13(j)(1)(i) and except meal products as defined in §101.13(l) and main dish products as defined in §101.13(m), provided that:

(i) The food contains at least 25 percent fewer calories per reference amount customarily consumed than an appropriate reference food as described in §101.13(j)(1); and

(ii) As required in §101.13(j)(2) for relative claims:

(A) The identity of the reference food and the percent (or fraction) that the calories differ between the two foods are declared in immediate proximity to the most prominent such claim (e.g., reduced calorie cupcakes ''33⅓ percent fewer calories than regular cupcakes''); and

(B) Quantitative information comparing the level of the nutrient per labeled serving size with that of the reference food that it replaces (e.g., ''Calorie content has been reduced from 150 to 100 calories per serving.'') is declared adjacent to the most prominent claim or to the nutrition label, except that if the nutrition label is on the information panel, the quantitative information may be located elsewhere on the information panel in accordance with §101.2.

(iii) Claims described in paragraph (b)(4) of this section may not be made on the label or labeling of foods if the reference food meets the definition for ''low calorie.''

(5) The terms defined in paragraph (b)(4) of this section may be used on the label or in the labeling of meal products as defined in §101.13(l) and main dish products as defined in §101.13(m), provided that:

(i) The food contains at least 25 percent fewer calories per 100 g of food than an appropriate reference food as described in §101.13(j)(1); and

(ii) As required in §101.13(j)(2) for relative claims:

(A) The identity of the reference food and the percent (or fraction) that the calories differ between the two foods are declared in immediate proximity to the most prominent such claim (e.g., Larry's Reduced Calorie Lasagna, ''25 percent fewer calories per oz (or 3 oz) than our regular Lasagna''); and

(B) Quantitative information comparing the level of the nutrient in the product per specified weight with that of the reference food that it replaces (e.g., ''Calorie content has been reduced from 108 calories per 3 oz to 83 calories per 3 oz.'') is declared adjacent to the most prominent claim or to the nutrition label, except that if the nutrition label is on the information panel, the quantitative information may be located elsewhere on the information panel in accordance with §101.2.

(iii) Claims described in paragraph (b)(5) of this section may not be made on the label or labeling of food if the

reference food meets the definition for ''low calorie.''

(c) *Sugar content claims*—(1) *Use of terms such as ''sugar free,'' ''free of sugar,'' ''no sugar,'' ''zero sugar,'' ''without sugar,'' ''sugarless,'' ''trivial source of sugar,'' ''negligible source of sugar,'' or ''dietarily insignificant source of sugar.''* Consumers may reasonably be expected to regard terms that represent that the food contains no sugars or sweeteners e.g., ''sugar free,'' or ''no sugar,'' as indicating a product which is low in calories or significantly reduced in calories. Consequently, except as provided in paragraph (c)(2) of this section, a food may not be labeled with such terms unless:

(i) The food contains less than 0.5 g of sugars, as defined in §101.9(c)(6)(ii), per reference amount customarily consumed and per labeled serving or, in the case of a meal product or main dish product, less than 0.5 g of sugars per labeled serving; and

(ii) The food contains no ingredient that is a sugar or that is generally understood by consumers to contain sugars unless the listing of the ingredient in the ingredient statement is followed by an asterisk that refers to the statement below the list of ingredients, which states ''adds a trivial amount of sugar,'' ''adds a negligible amount of sugar,'' or ''adds a dietarily insignificant amount of sugar;'' and

(iii)(A) It is labeled ''low calorie'' or ''reduced calorie'' or bears a relative claim of special dietary usefulness labeled in compliance with paragraphs (b)(2), (b)(3), (b)(4), or (b)(5) of this section, or, if a dietary supplement, it meets the definition in paragraph (b)(2) of this section for ''low calorie'' but is prohibited by §§101.13(b)(5) and 101.60(a)(4) from bearing the claim; or

(B) Such term is immediately accompanied, each time it is used, by either the statement ''not a reduced calorie food,'' ''not a low calorie food,'' or ''not for weight control.''

(2) The terms ''no added sugar,'' ''without added sugar,'' or ''no sugar added'' may be used only if:

(i) No amount of sugars, as defined in §101.9(c)(6)(ii), or any other ingredient that contains sugars that functionally substitute for added sugars is added during processing or packaging; and

(ii) The product does not contain an ingredient containing added sugars such as jam, jelly, or concentrated fruit juice; and

(iii) The sugars content has not been increased above the amount present in the ingredients by some means such as the use of enzymes, except where the intended functional effect of the process is not to increase the sugars content of a food, and a functionally insignificant increase in sugars results; and

(iv) The food that it resembles and for which it substitutes normally contains added sugars; and

(v) The product bears a statement that the food is not ''low calorie'' or ''calorie reduced'' (unless the food meets the requirements for a ''low'' or ''reduced calorie'' food) and that directs consumers' attention to the nutrition panel for further information on sugar and calorie content.

(3) Paragraph (c)(1) of this section shall not apply to a factual statement that a food, including foods intended specifically for infants and children less than 2 years of age, is unsweetened or contains no added sweeteners in the case of a food that contains apparent substantial inherent sugar content, e.g., juices.

(4) The claims provided for in paragraph (c)(1) and (c)(2) of this section may be used on labels or in labeling of dietary supplements of vitamins or minerals that are intended specifically for use by infants and children less than 2 years of age.

(5) The terms ''reduced sugar,'' ''reduced in sugar,'' ''sugar reduced,'' ''less sugar,'' ''lower sugar'' or ''lower in sugar'' may be used on the label or in labeling of foods, except meal products as defined in §101.13(l), main dish products as defined in §101.13(m), and dietary supplements of vitamins or minerals, provided that:

(i) The food contains at least 25 percent less sugar per reference amount customarily consumed than an appropriate reference food as described in §101.13(j)(1); and

(ii) As required in §101.13(j)(2) for relative claims:

(A) The identity of the reference food and the percent (or fraction) that the sugar differs between the two foods are declared in immediate proximity to the

most prominent such claim (e.g., ''these corn flakes contain 25 percent less sugar than our sugar coated corn flakes''); and

(B) Quantitative information comparing the level of the sugar in the product per labeled serving with that of the reference food that it replaces (e.g., ''Sugar content has been lowered from 8 g to 6 g per serving.'') is declared adjacent to the most prominent claim or to the nutrition label, except that if the nutrition label is on the information panel, the quantitative information may be located elsewhere on the information panel in accordance with § 101.2.

(6) The terms defined in paragraph (c)(5) of this section may be used on the label or in the labeling of a meal product as defined in § 101.13(l) and a main dish product as defined in § 101.13(m), provided that:

(i) The food contains at least 25 percent less sugars per 100 g of food than an appropriate reference food as described in § 101.13(j)(1), and

(ii) As required in § 101.13(j)(2) for relative claims:

(A) The identity of the reference food and the percent (or fraction) that the sugars differ between the two foods are declared in immediate proximity to the most prominent such claim (e.g., reduced sweet and sour shrimp dinner, ''25 percent less sugar per 3 oz than our regular sweet and sour shrimp dinner''); and

(B) Quantitative information comparing the level of the nutrient in the product per specified weight with that of the reference food that it replaces (e.g., ''Sugar content has been reduced from 17 g per 3 oz to 13 g per 3 oz.'') is declared adjacent to the most prominent claim or to the nutrition label, except that if the nutrition label is on the information panel, the quantitative information may be located elsewhere on the information panel in accordance with § 101.2.

[58 FR 2413, Jan. 6, 1993; 58 FR 17342, Apr. 2, 1993, as amended at 58 FR 44031, Aug. 18, 1993; 59 FR 394, Jan. 4, 1994; 60 FR 17206, Apr. 5, 1995; 62 FR 15342, Mar. 31, 1997; 62 FR 49881, Sept. 23, 1997]

§ 101.61 Nutrient content claims for the sodium content of foods.

(a) *General requirements.* A claim about the level of sodium or salt in a food may only be made on the label or in the labeling of the food if:

(1) The claim uses one of the terms defined in this section in accordance with the definition for that term;

(2) The claim is made in accordance with the general requirements for nutrient content claims in § 101.13; and

(3) The food for which the claim is made is labeled in accordance with § 101.9, § 101.10, or § 101.36, as applicable.

(b) *Sodium content claims.* (1) The terms ''sodium free,'' ''free of sodium,'' ''no sodium,'' ''zero sodium,'' ''without sodium,'' ''trivial source of sodium,'' ''negligible source of sodium,'' or ''dietary insignificant source of sodium'' may be used on the label or in the labeling of foods, provided that:

(i) The food contains less than 5 milligrams (mg) of sodium per reference amount customarily consumed and per labeled serving or, in the case of a meal product or a main dish product, less than 5 mg of sodium per labeled serving; and

(ii) The food contains no ingredient that is sodium chloride or is generally understood by consumers to contain sodium, unless the listing of the ingredient in the ingredient statement is followed by an asterisk that refers to the statement below the list of ingredients, which states: ''Adds a trivial amount of sodium,'' ''adds a negligible amount of sodium'' or ''adds a dietarily insignificant amount of sodium;'' and

(iii) As required in § 101.13(e)(2) if the food meets these conditions without the benefit of special processing, alteration, formulation, or reformulation to lower the sodium content, it is labeled to disclose that sodium is not usually present in the food (e.g., ''leaf lettuce, a sodium free food'').

(2) The terms ''very low sodium,'' or ''very low in sodium,'' may be used on the label or in labeling of foods, except meal products as defined in § 101.13(l) and main dish products as defined in § 101.13(m), provided that:

(i)(A) The food has a reference amount customarily consumed greater than 30 grams (g) or greater than 2 tablespoons and contains 35 mg or less

sodium per reference amount customarily consumed; or

(B) The food has a reference amount customarily consumed of 30 g or less or 2 tablespoons or less and contains 35 mg or less sodium per reference amount customarily consumed and per 50 g (for dehydrated foods that must be reconstituted before typical consumption with water or a diluent containing an insignificant amount, as defined in §101.9(f)(1), of all nutrients per reference amount customarily consumed, the per 50-g criterion refers to the ''as prepared'' form);

(ii) If the food meets these conditions without the benefit of special processing, alteration, formulation, or reformulation to vary the sodium content, it is labeled to clearly refer to all foods of its type and not merely to the particular brand to which the label attaches (e.g., ''potatoes, a very low-sodium food'').

(3) The terms defined in paragraph (b)(2) of this section may be used on the label or in labeling of meal products as defined in §101.13(l) and main dish products as defined in §101.13(m), provided that:

(i) The product contains 35 mg or less of sodium per 100 g of product; and

(ii) If the product meets this condition without the benefit of special processing, alteration, formulation, or reformulation to lower the sodium content, it is labeled to clearly refer to all foods of its type and not merely to the particular brand to which the label attaches.

(4) The terms ''low sodium,'' or ''low in sodium,'' ''little sodium,'' ''contains a small amount of sodium,'' or ''low source of sodium'' may be used on the label or in the labeling of foods, except meal products as defined in §101.13(l) and main dish products as defined in §101.13(m), provided that:

(i)(A) The food has a reference amount customarily consumed greater than 30 g or greater than 2 tablespoons and contains 140 mg or less sodium per reference amount customarily consumed; or

(B) The food has a reference amount customarily consumed of 30 g or less or 2 tablespoons or less and contains 140 mg or less sodium per reference amount customarily consumed and per 50 g (for dehydrated foods that must be reconstituted before typical consumption with water or a diluent containing an insignificant amount, as defined in §101.9(f)(1), of all nutrients per reference amount customarily consumed, the per 50-g criterion refers to the ''as prepared'' form); and

(ii) If the food meets these conditions without the benefit of special processing, alteration, formulation, or reformulation to vary the sodium content, it is labeled to clearly refer to all foods of its type and not merely to the particular brand to which the label attaches (e.g., ''fresh spinach, a low sodium food''); and

(5) The terms defined in paragraph (b)(4) of this section may be used on the label or in labeling of meal products as defined in §101.13(l) and main dish products as defined in §101.13(m), provided that:

(i) The product contains 140 mg or less sodium per 100 g; and

(ii) If the product meets these conditions without the benefit of special processing, alteration, formulation, or reformulation to lower the sodium content, it is labeled to clearly refer to all foods of its type and not merely to the particular brand to which the label attaches.

(6) The terms ''reduced sodium,'' ''reduced in sodium,'' ''sodium reduced,'' ''less sodium,'' ''lower sodium,'' or ''lower in sodium'' may be used on the label or in labeling of foods, except meal products as defined in §101.13(l) and main dish products as defined in §101.13(m), provided that:

(i) The food contains at least 25 percent less sodium per reference amount customarily consumed than an appropriate reference food as described in §101.13(j)(1).

(ii) As required for §101.13(j)(2) for relative claims:

(A) The identity of the reference food and the percent (or fraction) that the sodium differs from the labeled food are declared in immediate proximity to the most prominent such claim (e.g., ''reduced sodium _____, 50 percent less sodium than regular _____''); and

(B) Quantitative information comparing the level of the sodium in the product per labeled serving with that of the reference food that it replaces

(e.g., ''Sodium content has been lowered from 300 to 150 mg per serving.'') is declared adjacent to the most prominent claim or to the nutrition label, except that if the nutrition label is on the information panel, the quantitative information may be located elsewhere on the information panel in accordance with § 101.2.

(iii) Claims described in paragraph (b)(6) of this section may not be made on the label or in the labeling of a food if the nutrient content of the reference food meets the definition for ''low sodium.''

(7) The terms defined in paragraph (b)(6) of this section may be used on the label or in the labeling of meal products as defined in § 101.13(l) and main dish products as defined in § 101.13(m), provided that:

(i) The food contains at least 25 percent less sodium per 100 g of food than an appropriate reference food as described in § 101.13(j)(1), and

(ii) As required in § 101.13(j)(2) for relative claims:

(A) The identity of the reference food and the percent (or fraction) that the sodium differs from the reference food are declared in immediate proximity to the most prominent such claim (e.g., reduced sodium eggplant parmigiana dinner ''30 percent less sodium per oz (or 3 oz) than our regular eggplant parmigiana dinner'').

(B) Quantitative information comparing the level of sodium in the product per specified weight with that of the reference food that it replaces (e.g., ''Sodium content has been reduced from 217 mg per 3 oz to 150 mg per 3 oz.'') is declared adjacent to the most prominent claim or to the nutrition label, except that if the nutrition label is on the information panel, the quantitative information may be located elsewhere on the information panel in accordance with § 101.2.

(iii) Claims described in paragraph (b)(7) of this section may not be made on the label or in the labeling of a food if the nutrient content of the reference food meets the definition for ''low sodium.''

(c) The term ''salt'' is not synonymous with ''sodium.'' Salt refers to sodium chloride. However, references to salt content such as ''unsalted,'' ''no salt,'' ''no salt added'' are potentially misleading.

(1) The term ''salt free'' may be used on the label or in labeling of foods only if the food is ''sodium free'' as defined in paragraph (b)(1) of this section.

(2) The terms ''unsalted,'' ''without added salt,'' and ''no salt added'' may be used on the label or in labeling of foods only if:

(i) No salt is added during processing;

(ii) The food that it resembles and for which it substitutes is normally processed with salt; and

(iii) If the food is not sodium free, the statement, ''not a sodium free food'' or ''not for control of sodium in the diet'' appears adjacent to the nutrition label of the food bearing the claim, or, if the nutrition label is on the information panel, it may appear elsewhere on the information panel in accordance with § 101.2.

(3) Paragraph (c)(2) of this section shall not apply to a factual statement that a food intended specifically for infants and children less than 2 years of age is unsalted, provided such statement refers to the taste of the food and is not otherwise false and misleading.

[58 FR 2413, Jan. 6, 1993; 58 FR 17342, Apr. 2, 1993, as amended at 58 FR 44032, Aug. 18, 1993; 59 FR 394, Jan. 4, 1994; 60 FR 17206, Apr. 5, 1995]

§ 101.62 Nutrient content claims for fat, fatty acid, and cholesterol content of foods.

(a) *General requirements.* A claim about the level of fat, fatty acid, and cholesterol in a food may only be made on the label or in the labeling of foods if:

(1) The claim uses one of the terms defined in this section in accordance with the definition for that term;

(2) The claim is made in accordance with the general requirements for nutrient content claims in § 101.13;

(3) The food for which the claim is made is labeled in accordance with § 101.9, § 101.10, or § 101.36, as applicable; and

(4) For dietary supplements, claims for fat, saturated fat, and cholesterol may not be made on products that meet the criteria in § 101.60(b)(1) or (b)(2) for ''calorie free'' or ''low calorie'' claims.

(b) *Fat content claims.* (1) The terms ''fat free,'' ''free of fat,'' ''no fat,'' ''zero fat,'' ''without fat,'' ''negligible source of fat,'' or ''dietarily insignificant source of fat'' or, in the case of milk products, ''skim'' may be used on the label or in labeling of foods, provided that:

(i) The food contains less than 0.5 gram (g) of fat per reference amount customarily consumed and per labeled serving or, in the case of a meal product or main dish product, less than 0.5 g of fat per labeled serving; and

(ii) The food contains no added ingredient that is a fat or is generally understood by consumers to contain fat unless the listing of the ingredient in the ingredient statement is followed by an asterisk that refers to the statement below the list of ingredients, which states ''adds a trivial amount of fat,'' ''adds a negligible amount of fat,'' or ''adds a dietarily insignificant amount of fat;'' and

(iii) As required in §101.13(e)(2), if the food meets these conditions without the benefit of special processing, alteration, formulation, or reformulation to lower fat content, it is labeled to disclose that fat is not usually present in the food (e.g., ''broccoli, a fat free food'').

(2) The terms ''low fat,'' ''low in fat,'' ''contains a small amount of fat,'' ''low source of fat,'' or ''little fat'' may be used on the label or in labeling of foods, except meal products as defined in §101.13(l) and main dish products as defined in §101.13(m), provided that:

(i)(A) The food has a reference amount customarily consumed greater than 30 g or greater than 2 tablespoons and contains 3 g or less of fat per reference amount customarily consumed; or

(B) The food has a reference amount customarily consumed of 30 g or less or 2 tablespoons or less and contains 3 g or less of fat per reference amount customarily consumed and per 50 g of food (for dehydrated foods that must be reconstituted before typical consumption with water or a diluent containing an insignificant amount, as defined in §101.9(f)(1), of all nutrients per reference amount customarily consumed, the per 50-g criterion refers to the ''as prepared'' form); and

(ii) If the food meets these conditions without the benefit of special processing, alteration, formulation, or reformulation to lower fat content, it is labeled to clearly refer to all foods of its type and not merely to the particular brand to which the label attaches (e.g., ''frozen perch, a low fat food'').

(3) The terms defined in paragraph (b)(2) of this section may be used on the label or in labeling of meal products as defined in §101.13(l) or main dish products as defined in §101.13(m), provided that:

(i) The product contains 3 g or less of total fat per 100 g and not more than 30 percent of calories from fat; and

(ii) If the product meets these conditions without the benefit of special processing, alteration, formulation, or reformulation to lower fat content, it is labeled to clearly refer to all foods of its type and not merely to the particular brand to which the label attaches.

(4) The terms ''reduced fat,'' ''reduced in fat,'' ''fat reduced,'' ''less fat,'' ''lower fat,'' or ''lower in fat'' may be used on the label or in the labeling of foods, except meal products as defined in §101.13(l) and main dish products as defined in §101.13(m), provided that:

(i) The food contains at least 25 percent less fat per reference amount customarily consumed than an appropriate reference food as described in §101.13(j)(1); and

(ii) As required in §101.13(j)(2) for relative claims:

(A) The identity of the reference food and the percent (or fraction) that the fat differs between the two foods and are declared in immediate proximity to the most prominent such claim (e.g., ''reduced fat—50 percent less fat than our regular brownies''); and

(B) Quantitative information comparing the level of fat in the product per labeled serving with that of the reference food that it replaces (e.g., ''Fat content has been reduced from 8 g to 4 g per serving.'') is declared adjacent to the most prominent claim or to the nutrition label, except that if the nutrition label is on the information panel, the quantitative information may be located elsewhere on the information panel in accordance with §101.2.

(iii) Claims described in paragraph (b)(4) of this section may not be made on the label or in the labeling of a food if the nutrient content of the reference food meets the definition for ''low fat.''

(5) The terms defined in paragraph (b)(4) of this section may be used on the label or in the labeling of meal products as defined in §101.13(l) and main dish products as defined in §101.13(m), provided that:

(i) The food contains at least 25 percent less fat per 100 g of food than an appropriate reference food as described in §101.13(j)(1); and

(ii) As required in §101.13(j)(2) for relative claims:

(A) The identity of the reference food and the percent (or fraction) that the fat differs between the two foods are declared in immediate proximity to the most prominent such claim (e.g., reduced fat spinach souffle, ''33 percent less fat per 3 oz than our regular spinach souffle''); and

(B) Quantitative information comparing the level of fat in the product per specified weight with that of the reference food that it replaces (e.g., ''Fat content has been reduced from 7.5 g per 3 oz to 5 g per 3 oz.'') is declared adjacent to the most prominent claim, to the nutrition label, or, if the nutrition label is located on the information panel, it may appear elsewhere on the information panel in accordance with §101.2.

(iii) Claims described in paragraph (b)(5) of this section may not be made on the label or in the labeling of a food if the nutrient content of the reference food meets the definition for ''low fat.''

(6) The term ''__ percent fat free'' may be used on the label or in the labeling of foods, provided that:

(i) The food meets the criteria for ''low fat'' in paragraph (b)(2) or (b)(3) of this section;

(ii) The percent declared and the words ''fat free'' are in uniform type size; and

(iii) A ''100 percent fat free'' claim may be made only on foods that meet the criteria for ''fat free'' in paragraph (b)(1) of this section, that contain less than 0.5 g of fat per 100 g, and that contain no added fat.

(c) *Fatty acid content claims.* The label or labeling of foods that bear claims with respect to the level of saturated fat shall disclose the level of total fat and cholesterol in the food in immediate proximity to such claim each time the claim is made and in type that shall be no less than one-half the size of the type used for the claim with respect to the level of saturated fat. Declaration of cholesterol content may be omitted when the food contains less than 2 milligrams (mg) of cholesterol per reference amount customarily consumed or in the case of a meal or main dish product less than 2 mg of cholesterol per labeled serving. Declaration of total fat may be omitted with the term defined in paragraph (c)(1) of this section when the food contains less than 0.5 g of total fat per reference amount customarily consumed or, in the case of a meal product or a main dish product, when the product contains less than 0.5 g of total fat per labeled serving. The declaration of total fat may be omitted with the terms defined in paragraphs (c)(2) through (c)(5) of this section when the food contains 3 g or less of total fat per reference amount customarily consumed or in the case of a meal product or a main dish product, when the product contains 3 g or less of total fat per 100 g and not more than 30 percent calories from fat.

(1) The terms ''saturated fat free,'' ''free of saturated fat,'' ''no saturated fat,'' ''zero saturated fat,'' ''without saturated fat,'' ''trivial source of saturated fat,'' ''negligible source of saturated fat,'' or ''dietarily insignificant source of saturated fat'' may be used on the label or in the labeling of foods, provided that:

(i) The food contains less than 0.5 g of saturated fat and less than 0.5 g *trans* fatty acid per reference amount customarily consumed and per labeled serving, or in the case of a meal product or main dish product, less than 0.5 g of saturated fat and less than 0.5 g *trans* fatty acid per labeled serving; and

(ii) The food contains no ingredient that is generally understood by consumers to contain saturated fat unless the listing of the ingredient in the ingredient statement is followed by an asterisk that refers to the statement below the list of ingredients which

states, ''adds a trivial amount of saturated fat,'' ''adds a negligible amount of saturated fat,'' or ''adds a dietarily insignificant amount of saturated fat;'' and

(iii) As required in §101.13(e)(2), if the food meets these conditions without the benefit of special processing, alteration, formulation, or reformulation to lower saturated fat content, it is labeled to disclose that saturated fat is not usually present in the food.

(2) The terms ''low in saturated fat,'' ''low saturated fat,'' ''contains a small amount of saturated fat,'' ''low source of saturated fat,'' or ''a little saturated fat'' may be used on the label or in the labeling of foods, except meal products as defined in §101.13(l) and main dish products as defined in §101.13(m), provided that:

(i) The food contains 1 g or less of saturated fatty acids per reference amount customarily consumed and not more than 15 percent of calories from saturated fatty acids; and

(ii) If a food meets these conditions without benefit of special processing, alteration, formulation, or reformulation to lower saturated fat content, it is labeled to clearly refer to all foods of its type and not merely to the particular brand to which the label attaches (e.g., ''raspberries, a low saturated fat food'').

(3) The terms defined in paragraph (c)(2) of this section may be used on the label or in the labeling of meal products as defined in §101.13(l) and main dish products as defined in §101.13(m), provided that:

(i) The product contains 1 g or less of saturated fatty acids per 100 g and less than 10 percent calories from saturated fat; and

(ii) If the product meets these conditions without the benefit of special processing, alteration, formulation, or reformulation to lower saturated fat content, it is labeled to clearly refer to all foods of its type and not merely to the particular brand to which the label attaches.

(4) The terms ''reduced saturated fat,'' ''reduced in saturated fat,'' ''saturated fat reduced,'' ''less saturated fat,'' ''lower saturated fat,'' or ''lower in saturated fat'' may be used on the label or in the labeling of foods, except as limited by §101.13(j)(1)(i) and except meal products as defined in §101.13(l) and main dish products as defined in §101.13(m), provided that:

(i) The food contains at least 25 percent less saturated fat per reference amount customarily consumed than an appropriate reference food as described in §101.13(j)(1); and

(ii) As required in §101.13(j)(2) for relative claims:

(A) The identity of the reference food and the percent (or fraction) that the saturated fat differs between the two foods are declared in immediate proximity to the most prominent such claim (e.g., ''reduced saturated fat. Contains 50 percent less saturated fat than the national average for nondairy creamers''); and

(B) Quantitative information comparing the level of saturated fat in the product per labeled serving with that of the reference food that it replaces (e.g., ''Saturated fat reduced from 3 g to 1.5 g per serving'') is declared adjacent to the most prominent claim or to the nutrition label, except that if the nutrition label is on the information panel, the quantitative information may be located elsewhere on the information panel in accordance with §101.2.

(iii) Claims described in paragraph (c)(4) of this section may not be made on the label or in the labeling of a food if the nutrient content of the reference food meets the definition for ''low saturated fat.''

(5) The terms defined in paragraph (c)(4) of this section may be used on the label or in the labeling of meal products as defined in §101.13(l) and main dish products as defined in §101.13(m), provided that:

(i) The food contains at least 25 percent less saturated fat per 100 g of food than an appropriate reference food as described in §101.13(j)(1), and

(ii) As required in §101.13(j)(2) for relative claims:

(A) The identity of the reference food, and the percent (or fraction) that the fat differs between the two foods are declared in immediate proximity to the most prominent such claim (e.g., reduced saturated fat Macaroni and Cheese, ''33 percent less saturated fat per 3 oz than our regular Macaroni and Cheese'').

(B) Quantitative information comparing the level of saturated fat in the product per specified weight with that of the reference food that it replaces (e.g., ''Saturated fat content has been reduced from 2.5 g per 3 oz to 1.7 g per 3 oz.'') is declared adjacent to the most prominent claim or to the nutrition label, except that if the nutrition label in on the information panel, the quantitative information may be located elsewhere on the information panel in accordance with § 101.2.

(iii) Claims described in paragraph (c)(5) of this section may not be made on the label or in the labeling of a food if the nutrient content of the reference food meets the definition for ''low saturated fat.''

(d) *Cholesterol content claims.* (1) The terms ''cholesterol free,'' ''free of cholesterol,'' ''zero cholesterol,'' ''without cholesterol,'' ''no cholesterol,'' ''trivial source of cholesterol,'' ''negligible source of cholesterol,'' or ''dietarily insignificant source of cholesterol'' may be used on the label or in the labeling of foods, provided that:

(i) For foods that contain 13 g or less of total fat per reference amount customarily consumed, per labeled serving, and per 50 g if the reference amount customarily consumed is 30 g or less or 2 tablespoons or less (for dehydrated foods that must be reconstituted before typical consumption with water or a diluent containing an insignificant amount, as defined in § 101.9(f)(1), of all nutrients per reference amount customarily consumed, the per 50-g criterion refers to the ''as prepared'' form), or, in the case of meal products, 26.0 g or less total fat per labeled serving, or, in the case of main dish products, 19.5 g or less total fat per labeled serving:

(A) The food contains less than 2 mg of cholesterol per reference amount customarily consumed and per labeling serving or, in the case of a meal product or main dish product, less than 2 mg of cholesterol per labeled serving; and

(B) The food contains no ingredient that is generally understood by consumers to contain cholesterol, unless the listing of the ingredient in the ingredient statement is followed by an asterisk that refers to the statement below the list of ingredients, which states ''adds a trivial amount of cholesterol,'' ''adds a negligible amount of cholesterol,'' or ''adds a dietarily insignificant amount of cholesterol;'' and

(C) The food contains 2 g or less of saturated fatty acids per reference amount customarily consumed or, in the case of a meal product or main dish product, 2 g or less of saturated fatty acids per labeled serving; and

(D) As required in § 101.13(e)(2), if the food contains less than 2 mg of cholesterol per reference amount customarily consumed or in the case of a meal product or main dish product, less than 2 mg of cholesterol per labeled serving without the benefit of special processing, alteration, formulation, or reformulation to lower cholesterol content, it is labeled to disclose that cholesterol is not usually present in the food (e.g., ''applesauce, a cholesterol-free food'').

(ii) For food that contain more than 13 g of total fat per reference amount customarily consumed, per labeling serving, or per 50 g if the reference amount customarily consumed is 30 g or less or 2 tablespoons or less (for dehydrated foods that must be reconstituted before typical consumption with water or a diluent containing an insignificant amount, as defined in § 101.9(f)(1), of all nutrients per reference amount customarily consumed, the per 50-g criterion refers to the ''as prepared'' form), or in the case of a meal product, more than 26 g of total fat per labeled serving, or, in the case of a main dish product more than 19.5 g of total fat per labeled serving:

(A) The food contains less than 2 mg of cholesterol per reference amount customarily consumed and per labeling serving or, in the case of a meal product or main dish product, less than 2 mg of cholesterol per labeled serving; and

(B) The food contains no ingredient that is generally understood by consumers to contain cholesterol, unless the listing of the ingredient in the ingredient statement is followed by an asterisk that refers to the statement below the list of ingredients, which states ''adds a trivial amount of cholesterol,'' ''adds a negligible amount of

cholesterol,'' or ''adds a dietarily insignificant amount of cholesterol;'' and

(C) The food contains 2 g or less of saturated fatty acids per reference amount cutomarily consumed or, in the case of a meal product or main dish product less than 2 g of saturated fatty acids per labeled serving; and

(D) The label or labeling discloses the level of total fat in a serving (as declared on the label) of the food. Such disclosure shall appear in immediate proximity to such claim preceding any disclosure statement required under §101.13(h) in type that shall be no less than one-half the size of the type used for such claim. If the claim appears on more than one panel, the disclosure shall be made on each panel except for the panel that bears nutrition labeling. If the claim appears more than once on a panel, the disclosure shall be made in immediate proximity to the claim that is printed in the largest type; and

(E) As required in §101.13(e)(2), if the food contains less than 2 mg of cholesterol per reference amount customarily consumed or in the case of a meal product or main dish product less than 2 mg of cholesterol per labeled serving without the benefit of special processing, alteration, formulation, or reformulation to lower cholesterol content, it is labeled to disclose that cholesterol is not usually present in the food (e.g., ''canola oil, a cholesterol-free food, contains 14 g of fat per serving''); or

(F) If the food contains less than 2 mg of cholesterol per reference amount customarily consumed or in the case of a meal product or main dish product less than 2 mg of cholesterol per labeled serving only as a result of special processing, alteration, formulation, or reformulation, the amount of cholesterol is substantially less (i.e., meets requirements of paragraph (d)(4)(ii)(A) of this section) than the food for which it substitutes as specified in §101.13(d) that has a significant (e.g., 5 percent or more of a national or regional market) market share. As required in §101.13(j)(2) for relative claims:

(*1*) The identity of the reference food and the percent (or fraction) that the cholesterol was reduced are declared in immediate proximity to the most prominent such claim (e.g., ''cholesterol-free margarine, contains 100 percent less cholesterol than butter''); and

(*2*) Quantitative information comparing the level of cholesterol in the product per labeled serving with that of the reference food that it replaces (e.g., ''Contains no cholesterol compared with 30 mg cholesterol in one serving of butter. Contains 13 g of fat per serving.'') is declared adjacent to the most prominent claim or to the nutrition label, except that if the nutrition label is on the information panel, the quantitative information may be located elsewhere on the information panel in accordance with §101.2.

(2) The terms ''low in cholesterol,'' ''low cholesterol,'' ''contains a small amount of cholesterol,'' ''low source of cholesterol,'' or ''little cholesterol'' may be used on the label or in the labeling of foods, except meal products as defined in §101.13(l) and main dish products as defined in §101.13(m), provided that:

(i) For foods that have a reference amount customarily consumed greater than 30 g or greater than 2 tablespoons and contain 13 g or less of total fat per reference amount customarily consumed and per labeled serving:

(A) The food contains 20 mg or less of cholesterol per reference amount customarily consumed;

(B) The food contains 2 g or less of saturated fatty acids per reference amount customarily consumed; and

(C) As required in §101.13(e)(2), if the food meets these conditions without the benefit of special processing, alteration, formulation, or reformulation to lower cholesterol content, it is labeled to clearly refer to all foods of that type and not merely to the particular brand to which the label attaches (e.g., ''low fat cottage cheese, a low cholesterol food.'').

(ii) For foods that have a reference amount customarily consumed of 30 g or less or 2 tablespoons or less and contain 13 g or less of total fat per reference amount customarily consumed, per labeled serving, and per 50 g (for dehydrated foods that must be reconstituted before typical consumption with water or a diluent containing an insignificant amount, as defined in §101.9(f)(1), of all nutrients per reference amount customarily consumed,

the per 50-g criterion refers to the ''as prepared'' form);

(A) The food contains 20 mg or less of cholesterol per reference amount customarily consumed and per 50 g (for dehydrated foods that must be reconstituted before typical consumption with water or a diluent containing an insignificant amount, as defined in §101.9(f)(1), of all nutrients per reference amount customarily consumed, the per 50-g criterion refers to the ''as prepared'' form);

(B) The food contains 2 g or less of saturated fatty acids per reference amount customarily consumed; and

(C) As required in §101.13(e)(2), if the food meets these conditions without the benefit of special processing, alteration, formulation, or reformulation to lower cholesterol content, it is labeled to clearly refer to all foods of that type and not merely to the particular brand to which the label attaches (e.g., ''low fat cottage cheese, a low cholesterol food'').

(iii) For foods that have a reference amount customarily consumed greater than 30 g or greater than 2 tablespoons and contain more than 13 g of total fat per reference amount customarily consumed or per labeled serving,

(A) The food contains 20 mg or less of cholesterol per reference amount customarily consumed;

(B) The food contains 2 g or less of saturated fatty acids per reference amount customarily consumed;

(C) The label or labeling discloses the level of total fat in a serving (as declared on the label) of the food. Such disclosure shall appear in immediate proximity to such claim preceding any disclosure statement required under §101.13(h) in type that shall be no less than one-half the size of the type used for such claim. If the claim appears on more than one panel, the disclosure shall be made on each panel except for the panel that bears nutrition labeling. If the claim is made more than once on a panel, the disclosure shall be made in immediate proximity to the claim that is printed in the largest type; and

(D) As required in §101.13(e)(2), if the food meets these conditions without the benefit of special processing, alteration, formulation, or reformulation to lower cholesterol content, it is labeled to clearly refer to all foods of that type and not merely to the particular brand to which the label attaches; or

(E) If the food contains 20 mg or less of cholesterol only as a result of special processing, alteration, formulation, or reformulation, the amount of cholesterol is substantially less (i.e., meets requirements of paragraph (d)(4)(ii)(A) of this section) than the food for which it substitutes as specified in §101.13(d) that has a significant (e.g., 5 percent or more of a national or regional market) market share. As required in §101.13(j)(2) for relative claims:

(*1*) The identity of the reference food and the percent (or fraction) that the cholesterol has been reduced are declared in immediate proximity to the most prominent such claim (e.g., ''low-cholesterol peanut butter sandwich crackers, contains 83 percent less cholesterol than our regular peanut butter sandwich crackers''); and

(*2*) Quantitative information comparing the level of cholesterol in the product per labeled serving with that of the reference food that it replaces (e.g., ''Cholesterol lowered from 30 mg to 5 mg per serving; contains 13 g of fat per serving.'') is declared adjacent to the most prominent claim or to the nutrition label, except that if the nutrition label is on the information panel, the quantitative information may be located elsewhere on the information panel in accordance with §101.2.

(iv) For foods that have a reference amount customarily consumed of 30 g or less or 2 tablespoons or less and contain more than 13 g of total fat per reference amount customarily consumed, per labeled serving, or per 50 g (for dehydrated foods that must be reconstituted before typical consumption with water or a diluent containing an insignificant amount, as defined in §101.9(f)(1), of all nutrients per reference amount customarily consumed, the per 50-g criterion refers to the ''as prepared'' form),

(A) The food contains 20 mg or less of cholesterol per reference amount customarily consumed and per 50 g (for dehydrated foods that must be reconstituted before typical consumption with water or a diluent containing an insignificant amount, as defined in

§ 101.9(f)(1), of all nutrients per reference amount customarily consumed, the per 50-g criterion refers to the ''as prepared'' form),

(B) The food contains 2 g or less of saturated fatty acids per reference amount customarily consumed;

(C) The label or labeling discloses the level of total fat in a serving (as declared on the label) of the food. Such disclosure shall appear in immediate proximity to such claim preceding any disclosure statement required under § 101.13(h) in type that shall be no less than one-half the size of the type used for such claim. If the claim appears on more than one panel, the disclosure shall be made on each panel except for the panel that bears nutrition labeling. If the claim is made more than once on a panel, the disclosure shall be made in immediate proximity to the claim that is printed in the largest type; and

(D) As required in § 101.13(e)(2), if the food meets these conditions without the benefit of special processing, alteration, formulation, or reformulation to lower cholesterol content, it is labeled to clearly refer to all foods of that type and not merely to the particular brand to which the label attaches; or

(E) If the food contains 20 mg or less of cholesterol only as a result of special processing, alteration, formulation, or reformulation, the amount of cholesterol is substantially less (i.e., meets requirements of paragraph (d)(4)(ii)(A) of this section) than the food for which it substitutes as specified in § 101.13(d) that has a significant (i.e., 5 percent or more of a national or regional market) market share. As required in § 101.13(j)(2) for relative claims:

(*1*) The identity of the reference food and the percent (or fraction) that the cholesterol has been reduced are declared in immediate proximity to the most prominent such claim (e.g., ''low-cholesterol peanut butter sandwich crackers, contains 83 percent less cholesterol than our regular peanut butter sandwich crackers''); and

(*2*) Quantitative information comparing the level of cholesterol in the product per labeled serving with that of the reference food that it replaces (e.g., ''Cholesterol lowered from 30 mg to 5 mg per serving; contains 13 g of fat per serving.'') is declared adjacent to the most prominent claim or to the nutrition label, except that if the nutrition label is on the information panel, the quantitative information may be located elsewhere on the information panel in accordance with § 101.2.

(3) The terms defined in paragraph (d)(2) of this section may be used on the label and in labeling of meal products as defined in § 101.13(l) or a main dish product as defined in § 101.13(m) provided that the product meets the requirements of paragraph (d)(2) of this section except that the determination as to whether paragraph (d)(2)(i) or (d)(2)(iii) of this section applies to the product will be made only on the basis of whether the meal product contains 26 g or less of total fat per labeled serving or the main dish product contain 19.5 g or less of total fat per labeled serving, the requirement in paragraphs (d)(2)(i)(A) and (d)(2)(iii)(A) of this section shall be limited to 20 mg of cholesterol per 100 g, and the requirement in paragraphs (d)(2)(i)(B) and (d)(2)(iii)(B) of this section shall be modified to require that the food contain 2 g or less of saturated fat per 100 g rather than per reference amount customarily consumed.

(4) The terms ''reduced cholesterol,'' ''reduced in cholesterol,'' ''cholesterol reduced,'' ''less cholesterol,'' ''lower cholesterol,'' or ''lower in cholesterol'' except as limited by § 101.13(j)(1)(i) may be used on the label or in labeling of foods or foods that substitute for those foods as specified in § 101.13(d), excluding meal products as defined in § 101.13(l) and main dish products as defined in § 101.13(m), provided that:

(i) For foods that contain 13 g or less of total fat per reference amount customarily consumed, per labeled serving, and per 50 g if the reference amount customarily consumed is 30 g or less or 2 tablespoons or less (for dehydrated foods that must be reconstituted before typical consumption with water or a diluent containing an insignificant amount, as defined in § 101.9(f)(1), of all nutrients per reference amount customarily consumed, the per 50-g criterion refers to the ''as prepared'' form):

(A) The food has been specifically formulated, altered, or processed to reduce its cholesterol by 25 percent or more from the reference food it resembles as defined in §101.13(j)(1) and for which it substitutes as specified in §101.13(d) that has a significant (i.e., 5 percent or more) market share; and

(B) The food contains 2 g or less of saturated fatty acids per reference amount customarily consumed; and

(C) As required in §101.13(j)(2) for relative claims:

(*1*) The identity of the reference food and the percent (or fraction) that the cholesterol has been reduced are declared in immediate proximity to the most prominent such claim; and

(*2*) Quantitative information comparing the level of cholesterol in the product per labeled serving with that of the reference food that it replaces (e.g., ''[labeled product] 50 mg cholesterol per serving; [reference product] 30 mg cholesterol per serving'') is declared adjacent to the most prominent claim or to the nutrition label, except that if the nutrition label is on the information panel, the quantitative information may be located elsewhere on the information panel in accordance with §101.2.

(ii) For foods that contain more than 13 g of total fat per reference amount customarily consumed, per labeled serving, or per 50 g if the reference amount customarily consumed is 30 g or less or 2 tablespoons or less (for dehydrated foods that must be reconstituted before typical consumption with water or a diluent containing an insignificant amount, as defined in §101.9(f)(1), of all nutrients per reference amount customarily consumed, the per 50-g criterion refers to the ''as prepared'' form):

(A) The food has been specifically formulated, altered, or processed to reduce its cholesterol by 25 percent or more from the reference food it resembles as defined in §101.13(j)(1) and for which it substitutes as specified in §101.13(d) that has a significant (i.e., 5 percent or more of a national or regional market) market share;

(B) The food contains 2 g or less of saturated fatty acids per reference amount customarily consumed;

(C) The label or labeling discloses the level of total fat in a serving (as declared on the label) of the food. Such disclosure shall appear in immediate proximity to such claim preceding any disclosure statement required under §101.13(h) in type that shall be no less than one-half the size of the type used for such claim. If the claim appears on more than one panel, the disclosure shall be made on each panel except for the panel that bears nutrition labeling. If the claim is made more than once on a panel, the disclosure shall be made in immediate proximity to the claim that is printed in the largest type; and

(D) As required in §101.13(j)(2) for relative claims:

(*1*) The identity of the reference food and the percent (or fraction) that the cholesterol has been reduced are declared in immediate proximity to the most prominent such claim (e.g., 25 percent less cholesterol than _____); and

(*2*) Quantitative information comparing the level of cholesterol in the product per labeled serving with that of the reference food that it replaces (e.g., ''Cholesterol lowered from 55 mg to 30 mg per serving. Contains 13 g of fat per serving.'') is declared adjacent to the most prominent claim or to the nutrition label, except that if the nutrition label is on the information panel, the quantitative information may be located elsewhere on the information panel in accordance with §101.2.

(iii) Claims described in paragraph (d)(4) of this section may not be made on the label or in labeling of a food if the nutrient content of the reference food meets the definition for ''low cholesterol.''

(5) The terms defined in paragraph (d)(4) of this section may be used on the label or in the labeling of meal products as defined in §101.13(l) and main dish products as defined in §101.13(m), provided that:

(i) For meal products that contain 26.0 g or less of total fat per labeled serving or for main dish products that contain 19.5 g or less of total fat per labeled serving;

(A) The food has been specifically formulated, altered, or processed to reduce its cholesterol by 25 percent or

more from the reference food it resembles as defined in §101.13(j)(1) and for which it substitutes as specified in §101.13(d) that has a significant (e.g., 5 percent or more of a national or regional market) market share;

(B) The food contains 2 g or less of saturated fatty acids per 100 g; and

(C) As required in §101.13(j)(2) for relative claims:

(*1*) The identity of the reference food, and the percent (or fraction) that the cholesterol has been reduced are declared in immediate proximity to the most prominent such claim (e.g., ''25% less cholesterol per 3 oz than _____); and

(*2*) Quantitative information comparing the level of cholesterol in the product per specified weight with that of the reference food that it replaces (e.g., ''Cholesterol content has been reduced from 35 mg per 3 oz to 25 mg per 3 oz.'') is declared adjacent to the most prominent claim or to the nutrition label, except that if the nutrition label is on the information panel, the quantitative information may be located elsewhere on the information panel in accordance with §101.2.

(ii) For meal products that contain more than 26.0 g of total fat per labeled serving or for main dish products that contain more than 19.5 g of total fat per labeled serving:

(A) The food has been specifically formulated, altered, or processed to reduce its cholesterol by 25 percent or more from the reference food it resembles as defined in §101.13(j)(1) and for which it substitutes as specified in §101.13(d) that has a significant (e.g., 5 percent or more of a national or regional market) market share.

(B) The food contains 2 g or less of saturated fatty acids per 100 g;

(C) The label or labeling discloses the level of total fat in a serving (as declared on the label) of the food. Such disclosure shall appear in immediate proximity to such claim preceding any disclosure statement required under §101.13(h) in type that shall be no less than one-half the size of the type used for such claim. If the claim appears on more than one panel the disclosure shall be made on each panel except for the panel that bears nutrition labeling. If the claim is made more than once on a panel, the disclosure shall be made in immediate proximity to the claim that is printed in the largest type; and

(D) As required in §101.13(j)(2) for relative claims:

(*1*) The identity of the reference food and the percent (or fraction) that the cholesterol has been reduced are declared in immediate proximity to the most prominent such claim (e.g., 25 percent less cholesterol than _____); and

(*2*) Quantitative information comparing the level of cholesterol in the product per specified weight with that of the reference food that it replaces (e.g., ''Cholesterol lowered from 30 mg to 22 mg per 3 oz of product.'') is declared adjacent to the most prominent claim or to the nutrition label, except that if the nutrition label is on the information panel, the quantitative information may be located elsewhere on the information panel in accordance with §101.2.

(iii) Claims described in paragraph (d)(5) of this section may not be made on the label or in the labeling of a food if the nutrient content of the reference food meets the definition for ''low cholesterol.''

(e) ''*Lean*'' *and* ''*extra lean*'' *claims.* (1) The term ''lean'' may be used on the label or in labeling of foods except meal products as defined in §101.13(l) and main dish products as defined in §101.13(m) provided that the food is a seafood or game meat product and as packaged contains less than 10 g total fat, 4.5 g or less saturated fat, and less than 95 mg cholesterol per reference amount customarily consumed and per 100 g;

(2) The term defined in paragraph (e)(1) of this section may be used on the label or in labeling of a mixed dish not measurable with a cup as defined in §101.12(b) in table 2, provided that the food contains less than 8 g total fat, 3.5 g or less saturated fat and less than 80 mg cholesterol per reference amount customarily consumed;

(3) The term defined in paragraph (e)(1) of this section may be used on the label or in the labeling of meal products as defined in §101.13(l) or main dish products as defined in §101.13(m) provided that the food contains less

than 10 g total fat, 4.5 g or less saturated fat, and less than 95 mg cholesterol per 100 g and per labeled serving;

(4) The term ''extra lean'' may be used on the label or in the labeling of foods except meal products as defined in §101.13(l) and main dish products as defined in §101.13(m) provided that the food is a discrete seafood or game meat product and as packaged contains less than 5 g total fat, less than 2 g saturated fat, and less than 95 mg cholesterol per reference amount customarily consumed and per 100 g; and

(5) The term defined in paragraph (e)(4) of this section may be used on the label or in labeling of meal products as defined in §101.13(l) and main dish products as defined in §101.13(m) provided that the food contains less than 5 g of fat, less than 2 g of saturated fat, and less than 95 mg of cholesterol per 100 g and per labeled serving.

(f) *Misbranding*. Any label or labeling containing any statement concerning fat, fatty acids, or cholesterol that is not in conformity with this section shall be deemed to be misbranded under sections 201(n), 403(a), and 403(r) of the Federal Food, Drug, and Cosmetic Act.

[58 FR 2413, Jan. 6, 1993; 58 FR 17342, 17343, Apr. 2, 1993, as amended at 58 FR 44032, Aug. 18, 1993; 58 FR 60105, Nov. 15, 1993; 59 FR 394, Jan. 4, 1994; 60 FR 17207, Apr. 5, 1995; 61 FR 59001, Nov. 20, 1996; 63 FR 26980, May 15, 1998; 72 FR 1459, Jan. 12, 2007]

§ 101.65 Implied nutrient content claims and related label statements.

(a) *General requirements*. An implied nutrient content claim can only be made on the label and in labeling of the food if:

(1) The claim uses one of the terms described in this section in accordance with the definition for that term;

(2) The claim is made in accordance with the general requirements for nutrient content claims in §101.13; and

(3) The food for which the claim is made is labeled in accordance with §101.9, §101.10, or §101.36, as applicable.

(b) *Label statements that are not implied claims*. Certain label statements about the nature of a product are not nutrient content claims unless such statements are made in a context that would make them an implied claim under §101.13(b)(2). The following types of label statements are generally not implied nutrient content claims and, as such, are not subject to the requirements of §101.13 and this section:

(1) A claim that a specific ingredient or food component is absent from a product, provided that the purpose of such claim is to facilitate avoidance of the substances because of food allergies (see §105.62 of this chapter), food intolerance, religious beliefs, or dietary practices such as vegetarianism or other nonnutrition related reason, e.g., ''100 percent milk free;''

(2) A claim about a substance that is nonnutritive or that does not have a nutritive function, e.g., ''contains no preservatives,'' ''no artificial colors;''

(3) A claim about the presence of an ingredient that is perceived to add value to the product, e.g., ''made with real butter,'' ''made with whole fruit,'' or ''contains honey,'' except that claims about the presence of ingredients other than vitamins or minerals or that are represented as a source of vitamins and minerals are not allowed on labels or in labeling of dietary supplements of vitamins and minerals that are not in conventional food form.

(4) A statement of identity for a food in which an ingredient constitutes essentially 100 percent of a food (e.g., ''corn oil,'' ''oat bran,'' ''dietary supplement of vitamin C 60 mg tablet'').

(5) A statement of identity that names as a characterizing ingredient, an ingredient associated with a nutrient benefit (e.g., ''corn oil margarine,'' ''oat bran muffins,'' or ''whole wheat bagels''), unless such claim is made in a context in which label or labeling statements, symbols, vignettes, or other forms of communication suggest that a nutrient is absent or present in a certain amount; and

(6) A label statement made in compliance with a specific provision of part 105 of this chapter, solely to note that a food has special dietary usefulness relative to a physical, physiological, pathological, or other condition, where the claim identifies the special diet of which the food is intended to be a part.

(c) *Particular implied nutrient content claims*. (1) Claims about the food or an ingredient therein that suggest that a nutrient or an ingredient is absent or

present in a certain amount (e.g., ''high in oat bran'') are implied nutrient content claims and must comply with paragraph (a) of this section.

(2) The phrases ''contains the same amount of [nutrient] as a [food]'' and ''as much [nutrient] as a [food]'' may be used on the label or in the labeling of foods, provided that the amount of the nutrient in the reference food is enough to qualify that food as a ''good source'' of that nutrient, and the labeled food, on a per serving basis, is an equivalent, good source of that nutrient (e.g., ''as much fiber as an apple,'' ''Contains the same amount of Vitamin C as an 8 oz glass of orange juice.'').

(3) Claims may be made that a food contains or is made with an ingredient that is known to contain a particular nutrient, or is prepared in a way that affects the content of a particular nutrient in the food, if the finished food is either ''low'' in or a ''good source'' of the nutrient that is associated with the ingredient or type of preparation. If a more specific level is claimed (e.g., ''high in _____), that level of the nutrient must be present in the food. For example, a claim that a food contains oat bran is a claim that it is a good source of dietary fiber; that a food is made only with vegetable oil is a claim that it is low in saturated fat; and that a food contains no oil is a claim that it is fat free.

(d) *General nutritional claims.* (1) This paragraph covers labeling claims that are implied nutrient content claims because they:

(i) Suggest that a food because of its nutrient content may help consumers maintain healthy dietary practices; and

(ii) Are made in connection with an explicit or implicit claim or statement about a nutrient (e.g., ''healthy, contains 3 grams of fat'').

(2) You may use the term ''healthy'' or related terms (e.g., ''health,'' ''healthful,'' ''healthfully,'' ''healthfulness,'' ''healthier,'' ''healthiest,'' ''healthily,'' and ''healthiness'') as an implied nutrient content claim on the label or in labeling of a food that is useful in creating a diet that is consistent with dietary recommendations if:

(i) The food meets the following conditions for fat, saturated fat, cholesterol, and other nutrients:

If the food is...	The fat level must be...	The saturated fat level must be...	The cholesterol level must be...	The food must contain...
(A) A raw fruit or vegetable	Low fat as defined in § 101.62(b)(2)	Low saturated fat as defined in § 101.62(c)(2)	The disclosure level for cholesterol specified in § 101.13(h) or less	N/A
(B) A single-ingredient or a mixture of frozen or canned fruits and vegetables[1]	Low fat as defined in § 101.62(b)(2)	Low saturated fat as defined in § 101.62(c)(2)	The disclosure level for cholesterol specified in § 101.13(h) or less	N/A
(C) An enriched cereal-grain product that conforms to a standard of identity in part 136, 137 or 139 of this chapter	Low fat as defined in § 101.62(b)(2)	Low saturated fat as defined in § 101.62(c)(2)	The disclosure level for cholesterol specified in § 101.13(h) or less	N/A
(D) A raw, single-ingredient seafood or game meat	Less than 5 grams (g) total fat per RA[2] and per 100 g	Less than 2 g saturated fat per RA and per 100 g	Less than 95 mg cholesterol per RA and per 100 g	At least 10 percent of the RDI[3] or the DRV[4] per RA of one or more of vitamin A, vitamin C, calcium, iron, protein, or fiber

If the food is...	The fat level must be...	The saturated fat level must be...	The cholesterol level must be...	The food must contain...
(E) A meal product as defined in § 101.13(l) or a main dish product as defined in § 101.13(m)	Low fat as defined in § 101.62(b)(3)	Low saturated fat as defined in § 101.62(c)(3)	90 mg or less cholesterol per LS[5]	At least 10 percent of the RDI or DRV per LS of two nutrients (for a main dish product) or of three nutrients (for a meal product) of: vitamin A, vitamin C, calcium, iron, protein, or fiber
(F) A food not specifically listed in this table	Low fat as defined in § 101.62(b)(2)	Low saturated fat as defined in § 101.62(c)(2)	The disclosure level for cholesterol specified in § 101.13(h) or less	At least 10 percent of the RDI or the DRV per RA of one or more of vitamin A, vitamin C, calcium, iron, protein or fiber

[1] May include ingredients whose addition does not change the nutrient profile of the fruit or vegetable.
[2] RA means Reference Amount Customarily Consumed per Eating Occasion (§ 101.12(b)).
[3] RDI means Reference Daily Intake (§ 101.9(c)(8)(iv)).
[4] DRV means Daily Reference Value (§ 101.9(c)(9)).
[5] LS means Labeled Serving, i.e., the serving size that is specified in the nutrition information on the product label (§ 101.9(b)).

(ii) The food meets the following conditions for sodium:

If the food is...	The sodium level must be...
(A) A food with a RA that is greater than 30 g or 2 tablespoons (tbsp.)	480 mg or less sodium per RA and per LS
(B) A food with a RA that is equal to or less than 30 g or 2 tbsp.	480 mg or less sodium per 50 g[1]
(C) A meal product as defined in § 101.13(l) or a main dish product as defined in § 101.13(m)	600 mg or less sodium per LS

[1] For dehydrated food that is typically reconstituted with water or a liquid that contains insignificant amounts per RA of all nutrients (as defined in § 101.9(f)(1)), the 50 g refers to the ''prepared'' form of the product.

(iii) The food complies with the definition and declaration requirements in this part 101 for any specific nutrient content claim on the label or in labeling, and

(iv) If you add a nutrient to the food specified in paragraphs (d)(2)(i)(D), (d)(2)(i)(E), or (d)(2)(i)(F) of this section to meet the 10 percent requirement, that addition must be in accordance with the fortification policy for foods in § 104.20 of this chapter.

[58 FR 2413, Jan. 6, 1993; 58 FR 17343, Apr. 2, 1993, as amended at 59 FR 394, Jan. 4, 1994; 59 FR 24249, May 10, 1994; 59 FR 50828, Oct. 6, 1994; 62 FR 49858, Sept. 23, 1997; 63 FR 14355, Mar. 25, 1998; 70 FR 56848, Sept. 29, 2005]

§ 101.67 Use of nutrient content claims for butter.

(a) Claims may be made to characterize the level of nutrients, including fat, in butter if:

(1) The claim complies with the requirements of § 101.13 and with the requirements of the regulations in this subpart that define the particular nutrient content claim that is used and how it is to be presented. In determining whether a claim is appropriate, the calculation of the percent fat reduction in milkfat shall be based on the 80 percent milkfat requirement provided by the statutory standard for butter (21 U.S.C. 321a);

(2) The product contains cream or milk, including milk constituents (including, but not limited to, whey, casein, modified whey, and salts of casein), or both, with or without added salt, with or without safe and suitable colorings, with or without nutrients added to comply with paragraph (a)(3) of this section, and with or without safe and suitable bacterial cultures. The product may contain safe and suitable ingredients to improve texture, prevent syneresis, add flavor, extend shelf life, improve appearance, and add sweetness. The product may contain water to replace milkfat although the amount of water in the product shall be less than the amount of cream, milk, or milk constituents;

(3) The product is not nutritionally inferior, as defined in §101.3(e)(4), to butter as produced under 21 U.S.C. 321a; and

(4) If the product would violate 21 U.S.C. 321a but for the nutrient content claim that characterizes the level of nutrients, that claim shall be an explicit claim that is included as part of the common or usual name of the product.

(b) Deviations from the ingredient provisions of 21 U.S.C. 321a must be the minimum necessary to achieve similar performance characteristics as butter as produced under 21 U.S.C. 321a, or the food will be deemed to be adulterated under section 402(b) of the act. The performance characteristics (e.g., physical properties, organoleptic characteristics, functional properties, shelf life) of the product shall be similar to butter as produced under 21 U.S.C. 321a. If there is a significant difference in performance characteristics (that materially limits the uses of the product compared to butter,) the label shall include a statement informing the consumer of such difference (e.g., if appropriate, ''not recommended for baking purposes''). Such statement shall comply with the requirements of §101.13(d). The modified product shall perform at least one of the principal functions of butter substantially as well as butter as produced under 21 U.S.C. 321a.

(c)(1) Each of the ingredients used in the food shall be declared on the label as required by the applicable sections of this part.

(2) Safe and suitable ingredients added to improve texture, prevent syneresis, add flavor, extend shelf life, improve appearance, or add sweetness and water added to replace milkfat shall be identified with an asterisk in the ingredient statement. The statement ''*Ingredients not in regular butter'' shall immediately follow the ingredient statement in the same type size.

[58 FR 2455, Jan. 6, 1993]

§101.69 Petitions for nutrient content claims.

(a) This section pertains to petitions for claims, expressed or implied, that:

(1) Characterize the level of any nutrient which is of the type required to be in the label or labeling of food by section 403(q)(1) or (q)(2) of the Federal Food, Drug, and Cosmetic Act (the act); and

(2) That are not exempted under section 403(r)(5)(A) through (r)(5)(C) of the act from the requirements for such claims in section 403(r)(2).

(b) Petitions included in this section are:

(1) Petitions for a new (heretofore unauthorized) nutrient content claim;

(2) Petitions for a synonymous term (i.e., one that is consistent with a term defined by regulation) for characterizing the level of a nutrient; and

(3) Petitions for the use of an implied claim in a brand name.

(c) An original and one copy of the petition to be filed under the provisions of section 403(r)(4) of the act shall be submitted, or the petitioner may submit an original and a computer readable disk containing the petition. Contents of the disk should be in a standard format, such as ASCII format. Petitioners interested in submitting a disk should contact the Food and Drug Administration's (FDA) Center for Food Safety and Applied Nutrition for details. If any part of the material submitted is in a foreign language, it shall be accompanied by an accurate and complete English translation. The petition shall state the petitioner's post office address to which published notices as required by section 403 of the act may be sent.

(d) Pertinent information may be incorporated in, and will be considered as part of, a petition on the basis of specific reference to such information submitted to and retained in the files of FDA. However, any reference to unpublished information furnished by a person other than the applicant will not be considered unless use of such information is authorized (with the understanding that such information may in whole or part be subject to release to the public) in a written statement signed by the person who submitted it. Any reference to published information should be accompanied by reprints or photostatic copies of such references.

(e) If nonclinical laboratory studies are included in a petition submitted under section 403(r)(4) of the act, the petition shall include, with respect to each nonclinical study contained in the

petition, either a statement that the study has been, or will be, conducted in compliance with the good laboratory practice regulations as set forth in part 58 of this chapter or, if any such study was not conducted in compliance with such regulations, a brief statement of the reason for the noncompliance.

(f) If clinical investigations are included in a petition submitted under section 403(r)(4) of the act, the petition shall include a statement regarding each such clinical investigation relied upon in the petition that the study either was conducted in compliance with the requirements for institutional review set forth in part 56 of this chapter or was not subject to such requirements in accordance with § 56.104 or § 56.105 of this chapter, and that it was conducted in compliance with the requirements for informed consent set forth in part 50 of this chapter.

(g) The availability for public disclosure of petitions submitted to the agency under this section will be governed by the rules specified in § 10.20(j) of this chapter.

(h) All petitions submitted under this section shall include either a claim for a categorical exclusion under § 25.30 or 25.32 of this chapter or an environmental assessment under § 25.40 of this chapter.

(i) The data specified under the several lettered headings should be submitted on separate sheets or sets of sheets, suitably identified. If such data have already been submitted with an earlier application from the petitioner, the present petition may incorporate it by specific reference to the earlier petition.

(j) The petition must be signed by the petitioner or by his attorney or agent, or (if a corporation) by an authorized official.

(k) The petition shall include a statement signed by the person responsible for the petition, that to the best of his knowledge, it is a representative and balanced submission that includes unfavorable information, as well as favorable information, known to him pertinent to the evaluation of the petition.

(l) All applicable provisions of part 10—Administrative Practices and Procedures, may be used by FDA, the petitioner or any outside party with respect to any agency action on the petition.

(m)(1) Petitions for a new nutrient content claim shall include the following data and be submitted in the following form.

(Date) _____
Name of petitioner _____
Post office address _____
Subject of the petition _____
Office of Nutritional Products, Labeling and Dietary Supplements (HFS–800)
Food and Drug Administration,
Department of Health and Human Services,
Washington, DC 20204.
To Whom It May Concern:

The undersigned, _____ submits this petition under section 403(r)(4) of the Federal Food, Drug, and Cosmetic Act (the act) with respect to (statement of the claim and its proposed use).

Attached hereto and constituting a part of this petition, are the following:

A. A statement identifying the descriptive term and the nutrient that the term is intended to characterize with respect to the level of such nutrient. The statement should address why the use of the term as proposed will not be misleading. The statement should provide examples of the nutrient content claim as it will be used on labels or labeling, as well as the types of foods on which the claim will be used. The statement shall specify the level at which the nutrient must be present or what other conditions concerning the food must be met for the use of the term in labels or labeling to be appropriate, as well as any factors that would make the use of the term inappropriate.

B. A detailed explanation, supported by any necessary data, of why use of the food component characterized by the claim is of importance in human nutrition by virtue of its presence or absence at the levels that such claim would describe. This explanation shall also state what nutritional benefit to the public will derive from use of the claim as proposed, and why such benefit is not available through the use of existing terms defined by regulation under section 403(r)(2)(A)(i) of the act. If the claim is intended for a specific group within the population, the analysis should specifically address nutritional needs of such group, and should include scientific data sufficient for such purpose.

C. Analytical data that shows the amount of the nutrient that is the subject of the claim and that is present in the types of foods for which the claim is intended. The assays should be performed on representative samples using the AOAC INTERNATIONAL (AOAC International) methods where available. If no AOAC International method is available, the petitioner shall submit the

assay method used, and data establishing the validity of the method for assaying the nutrient in the particular food. The validation data should include a statistical analysis of the analytical and product variability.

D. A detailed analysis of the potential effect of the use of the proposed claim on food consumption and of any corresponding changes in nutrient intake. The latter item shall specifically address the intake of nutrients that have beneficial and negative consequences in the total diet. If the claim is intended for a specific group within the population, the above analysis shall specifically address the dietary practices of such group and shall include data sufficient to demonstrate that the dietary analysis is representative of such group.

E. The petitioner is required to submit either a claim for categorical exclusion under § 25.30 or § 25.32 of this chapter or an environmental assessment under § 25.40 of this chapter.

Yours very truly,
Petitioner _____
By _____
(Indicate authority)

(2) Within 15 days of receipt of the petition, the petitioner will be notified by letter of the date on which the petition was received by the agency. Such notice will inform the petitioner:

(i) That the petition is undergoing agency review (in which case a docket number will be assigned to the petition), and the petitioner will subsequently be notified of the agency's decision to file or deny the petition; or

(ii) That the petition is incomplete, e.g., it lacks any of the data required by this part, it presents such data in a manner that is not readily understood, or it has not been submitted in quadruplicate, in which case the petition will be denied, and the petitioner will be notified as to what respect the petition is incomplete.

(3) Within 100 days of the date of receipt of the petition, FDA will notify the petitioner by letter that the petition has either been filed or denied. If denied, the notification shall state the reasons therefor. If filed, the date of the notification letter becomes the date of filing for the purposes of section 403(r)(4)(A)(i) of the act. If FDA does not act within such 100 days, the petition shall be deemed to be denied unless an extension is mutually agreed upon by the FDA and the petitioner. A petition that has been denied, or has been deemed to be denied, without filing shall not be made available to the public. A filed petition shall be available to the public as provided under paragraph (g) of this section.

(4) Within 90 days of the date of filing FDA will by letter of notification to the petitioner:

(i) Deny the petition; or

(ii) Inform the petitioner that a proposed regulation to provide for the requested use of the new term will be published in the FEDERAL REGISTER. FDA will publish the proposal to amend the regulations to provide for the requested use of the nutrient content claim in the FEDERAL REGISTER within 90 days of the date of filing. The proposal will also announce the availability of the petition for public disclosure.

(iii) If FDA does not act within 90 days of the date of filing, the petition shall be deemed to be denied unless an extension is mutually agreed upon by FDA and the petitioner.

(5) If FDA issues a proposal, the rulemaking shall be completed within 540 days of the date of receipt of the petition.

(n)(1) Petitions for a synonymous term shall include the following data and be submitted in the following form.

(Date)_____
Name of petitioner _____
Post office address _____
Subject of the petition _____
Office of Nutritional Products, Labeling and Dietary Supplements (HFS–800)
Food and Drug Administration,
Department of Health and Human Services,
Washington, DC 20204.
To Whom It May Concern:

The undersigned, _____ submits this petition under section 403(r)(4) of the Federal Food, Drug, and Cosmetic Act (the act) with respect to (statement of the synonymous term and its proposed use in a nutrient content claim that is consistent with an existing term that has been defined under section 403(r)(2) of the act).

Attached hereto and constituting a part of this petition, are the following:

A. A statement identifying the synonymous descriptive term, the existing term defined by a regulation under section 403(r)(2)(A)(i) of the act with which the synonymous term is claimed to be consistent. The statement should address why the proposed synonymous term is consistent with the term already defined by the agency, and why the use of the synonymous term as proposed will not be misleading. The statement

should provide examples of the nutrient content claim as it will be used on labels or labeling, as well as the types of foods on which the claim will be used. The statement shall specify whether any limitations not applicable to the use of the defined term are intended to apply to the use of the synonymous term.

B. A detailed explanation, supported by any necessary data, of why use of the proposed term is requested, including an explanation of whether the existing defined term is inadequate for the purpose of effectively characterizing the level of a nutrient. This item shall also state what nutritional benefit to the public will derive from use of the claim as proposed, and why such benefit is not available through the use of existing term defined by regulation. If the claim is intended for a specific group within the population, the analysis should specifically address nutritional needs of such group, and should include scientific data sufficient for such purpose.

C. The petitioner is required to submit either a claim for categorical exclusion under § 25.30 or § 25.32 of this chapter or an environmental assessment under § 25.40 of this chapter.

Yours very truly,
Petitioner _____
By _____
(Indicate authority)

(2) Within 15 days of receipt of the petition the petitioner will be notified by letter of the date on which the petition was received. Such notice will inform the petitioner:

(i) That the petition is undergoing agency review (in which case a docket number will be assigned to the petition) and the petitioner will subsequently be notified of the agency's decision to grant the petitioner permission to use the proposed term or to deny the petition; or

(ii) That the petition is incomplete, e.g., it lacks any of the data required by this part, it presents such data in a manner that is not readily understood, or it has not been submitted in quadruplicate, in which case the petition will be denied, and the petitioner will be notified as to what respect the petition is incomplete.

(3) Within 90 days of the date of receipt of the petition that is accepted for review (i.e., that has not been found to be incomplete and consequently denied, FDA will notify the petitioner by letter of the agency's decision to grant the petitioner permission to use the proposed term, with any conditions or limitations on such use specified, or to deny the petition, in which case the letter shall state the reasons therefor. Failure of the petition to fully address the requirements of this section shall be grounds for denial of the petition.

(4) As soon as practicable following the agency's decision to either grant or deny the petition, FDA will publish a notice in the FEDERAL REGISTER informing the public of his decision. If the petition is granted the Food and Drug Administration will list, the approved synonymous term in the regulations listing terms permitted for use in nutrient content claims.

(o)(1) Petitions for the use of an implied nutrient content claim in a brand name shall include the following data and be submitted in the following form:

(Date)_____
Name of petitioner _____
Post office address _____
Subject of the petition _____
Office of Nutritional Products, Labeling and Dietary Supplements (HFS–800),
Food and Drug Administration,
Department of Health and Human Services,
Washington, DC 20204.
To Whom It May Concern:

The undersigned, _____ submits this petition under section 403(r)(4) of the Federal Food, Drug, and Cosmetic Act (the act) with respect to (statement of the implied nutrient content claim and its proposed use in a brand name).

Attached hereto and constituting a part of this petition, are the following:

A. A statement identifying the implied nutrient content claim, the nutrient the claim is intended to characterize, the corresponding term for characterizing the level of such nutrient as defined by a regulation under section 403(r)(2)(A)(i) of the act, and the brand name of which the implied claim is intended to be a part. The statement should address why the use of the brandname as proposed will not be misleading. It should address in particular what information is required to accompany the claim or other ways in which the claim meets the requirements of sections 201(n) and 403(a) of the act. The statement should provide examples of the types of foods on which the brand name will appear. It shall also include data showing that the actual level of the nutrient in the food qualifies the food to bear the corresponding term defined by regulation. Assay methods used to determine the level of a nutrient should meet the requirements stated under petition format item C in paragraph (k)(1) of this section.

B. A detailed explanation, supported by any necessary data, of why use of the proposed brand name is requested. This item shall also state what nutritional benefit to the public will derive from use of the brand name as proposed. If the branded product is intended for a specific group within the population, the analysis should specifically address nutritional needs of such group and should include scientific data sufficient for such purpose.

C. The petitioner is required to submit either a claim for categorical exclusion under § 25.30 or § 25.32 of this chapter or an environmental assessment under § 25.40 of this chapter.

Yours very truly,
Petitioner _____
By _____

(2) Within 15 days of receipt of the petition the petitioner will be notified by letter of the date on which the petition was received. Such notice will inform the petitioner:

(i) That the petition is undergoing agency review (in which case a docket number will be assigned to the petition); or

(ii) That the petition is incomplete, e.g., it lacks any of the data required by this part, it presents such data in a manner that is not readily understood, or it has not been submitted in quadruplicate, in which case the petition will be denied, and the petitioner will be notified as to what respect the petition is incomplete.

(3) FDA will publish a notice of the petition in the FEDERAL REGISTER announcing its availability to the public and seeking comment on the petition. The petition shall be available to the public to the extent provided under paragraph (g) of this section. The notice shall allow 30 days for comments.

(4) Within 100 days of the date of receipt of the petition that is accepted for review (i.e., that has not been found to be incomplete and subsequently returned to the petitioner), FDA will:

(i) Notify the petitioner by letter of the agency's decision to grant the petitioner permission to use the proposed brand name if such use is not misleading, with any conditions or limitations on such use specified; or

(ii) Deny the petition, in which case the letter shall state the reasons therefor. Failure of the petition to fully address the requirements of this section shall be grounds for denial of the petition. Should FDA not notify the petitioner of his decision on the petition within 100 days, the petition shall be considered to be granted.

(5) As soon as practicable following the granting of a petition, the Commissioner of Food and Drugs will publish a notice in the FEDERAL REGISTER informing the public of such fact.

[58 FR 2413, Jan. 6, 1993; 58 FR 17343, Apr. 2, 1993, as amended at 58 FR 44033, Aug. 18, 1993; 62 FR 40598, July 29, 1997; 63 FR 26718, May 14, 1998; 63 FR 40024, July 27, 1998; 67 FR 9585, Mar. 4, 2002; 69 FR 16481, Mar. 30, 2004]

Subpart E—Specific Requirements for Health Claims

§ 101.70 Petitions for health claims.

(a) Any interested person may petition the Food and Drug Administration (FDA) to issue a regulation regarding a health claim. An original and one copy of the petition shall be submitted, or the petitioner may submit an original and a computer readable disk containing the petition. Contents of the disk should be in a standard format, such as ASCII format. (Petitioners interested in submitting a disk should contact the Center for Food Safety and Applied Nutrition for details.) If any part of the material submitted is in a foreign language, it shall be accompanied by an accurate and complete English translation. The petition shall state the petitioner's post office address to which any correspondence required by section 403 of the Federal Food, Drug, and Cosmetic Act may be sent.

(b) Pertinent information may be incorporated in, and will be considered as part of, a petition on the basis of specific reference to such information submitted to and retained in the files of FDA. Such information may include any findings, along with the basis of the findings, of an outside panel with expertise in the subject area. Any reference to published information shall be accompanied by reprints, or easily readable copies of such information.

(c) If nonclinical laboratory studies are included in a petition, the petition shall include, with respect to each nonclinical study contained in the petition, either a statement that the study has been conducted in compliance with

the good laboratory practice regulations as set forth in part 58 of this chapter, or, if any such study was not conducted in compliance with such regulations, a brief statement of the reason for the noncompliance.

(d) If clinical or other human investigations are included in a petition, the petition shall include a statement that they were either conducted in compliance with the requirements for institutional review set forth in part 56 of this chapter, or were not subject to such requirements in accordance with § 56.104 or § 56.105, and a statement that they were conducted in compliance with the requirements for informed consent set forth in part 50 of this chapter.

(e) All data and information in a health claim petition are available for public disclosure after the notice of filing of petition is issued to the petitioner, except that clinical investigation reports, adverse reaction reports, product experience reports, consumer complaints, and other similar data and information shall only be available after deletion of:

(1) Names and any information that would identify the person using the product.

(2) Names and any information that would identify any third party involved with the report, such as a physician or hospital or other institution.

(f) Petitions for a health claim shall include the following data and be submitted in the following form:

(Date)_____
Name of petitioner _____
Post office address _____
Subject of the petition _____
Food and Drug Administration,
Office of Nutritional Products, Labeling and Dietary Supplements (HFS–800),
5001 Campus Dr.,
College Park, MD 20740,

The undersigned, _____ submits this petition pursuant to section 403(r)(4) or 403(r)(5)(D) of the Federal Food, Drug, and Cosmetic Act with respect to (statement of the substance and its health claim).

Attached hereto, and constituting a part of this petition, are the following:

A. Preliminary requirements. A complete explanation of how the substance conforms to the requirements of § 101.14(b) (21 CFR 101.14(b)). For petitions where the subject substance is a food ingredient or a component of a food ingredient, the petitioner should compile a comprehensive list of the specific ingredients that will be added to the food to supply the substance in the food bearing the health claim. For each such ingredient listed, the petitioner should state how the ingredient complies with the requirements of § 101.14(b)(3)(ii), e.g., that its use is generally recognized as safe (GRAS), listed as a food additive, or authorized by a prior sanction issued by the agency, and what the basis is for the GRAS claim, the food additive status, or prior sanctioned status.

B. Summary of scientific data. The summary of scientific data provides the basis upon which authorizing a health claim can be justified as providing the health benefit. The summary must establish that, based on the totality of publicly available scientific evidence (including evidence from well-designed studies conducted in a manner which is consistent with generally recognized scientific procedures and principles), there is significant scientific agreement among experts qualified by scientific training and experience to evaluate such claims, that the claim is supported by such evidence.

The summary shall state what public health benefit will derive from use of the claim as proposed. If the claim is intended for a specific group within the population, the summary shall specifically address nutritional needs of such group and shall include scientific data showing how the claim is likely to assist in meeting such needs.

The summary shall concentrate on the findings of appropriate review articles, National Institutes of Health consensus development conferences, and other appropriate resource materials. Issues addressed in the summary shall include answers to such questions as:

1. Is there an optimum level of the particular substance to be consumed beyond which no benefit would be expected?

2. Is there any level at which an adverse effect from the substance or from foods containing the substance occurs for any segment of the population?

3. Are there certain populations that must receive special consideration?

4. What other nutritional or health factors (both positive and negative) are important to consider when consuming the substance?

In addition, the summary of scientific data shall include a detailed analysis of the potential effect of the use of the proposed claim on food consumption, specifically any change due to significant alterations in eating habits and corresponding changes in nutrient intake resulting from such changes in food consumption. The latter item shall specifically address the effect on the intake of nutrients that have beneficial and negative consequences in the total diet.

If the claim is intended for a significant subpopulation within the general U.S. population, the analysis shall specifically address

the dietary practices of such group, and shall include data sufficient to demonstrate that the dietary analysis is representative of such group (e.g., adolescents or the elderly).

If appropriate, the petition shall explain the prevalence of the disease or health-related condition in the U.S. population and the relevance of the claim in the context of the total daily diet.

Also, the summary shall demonstrate that the substance that is the subject of the proposed claim conforms to the definition of the term ''substance'' in § 101.14(a)(2).

C. Analytical data that show the amount of the substance that is present in representative foods that would be candidates to bear the claim should be obtained from representative samples using methods from the AOAC INTERNATIONAL (AOAC), where available. If no AOAC method is available, the petitioner shall submit the assay method used and data establishing the validity of the method for assaying the substance in food. The validation data should include a statistical analysis of the analytical and product variability.

D. Model health claim. One or more model health claims that represent label statements that may be used on a food label or in labeling for a food to characterize the relationship between the substance in a food to a disease or health-related condition that is justified by the summary of scientific data provided in section C of the petition. The model health claim shall include:

1. A brief capsulized statement of the relevant conclusions of the summary, and

2. A statement of how this substance helps the consumer to attain a total dietary pattern or goal associated with the health benefit that is provided.

E. The petition shall include the following attachments:

1. Copies of any computer literature searches done by the petitioner (e.g., Medline).

2. Copies of articles cited in the literature searches and other information as follows:

a. All information relied upon for the support of the health claim, including copies of publications or other information cited in review articles and used to perform meta-analyses.

b. All information concerning adverse consequences to any segment of the population (e.g., sensitivity to the substance).

c. All information pertaining to the U.S. population.

F. The petitioner is required to submit either a claim for categorical exclusion under § 25.30 or § 25.32 of this chapter or an environmental assessment under § 25.40 of this chapter.

Yours very truly,
Petitioner _____
By _____
(Indicate authority)

(g) The data specified under the several lettered headings should be submitted on separate pages or sets of pages, suitably identified. If such data have already been submitted with an earlier application from the petitioner or any other final petition, the present petition may incorporate it by specific reference to the earlier petition.

(h) The petition shall include a statement signed by the person responsible for the petition that, to the best of his/her knowledge, it is a representative and balanced submission that includes unfavorable information as well as favorable information, known to him/her to be pertinent to the evaluation of the proposed health claim.

(i) The petition shall be signed by the petitioner or by his/her attorney or agent, or (if a corporation) by an authorized official.

(j) *Agency action on the petition.* (1) Within 15 days of receipt of the petition, the petitioner will be notified by letter of the date on which the petition was received. Such notice will inform the petitioner that the petition is undergoing agency review and that the petitioner will subsequently be notified of the agency's decision to file for comprehensive review or deny the petition.

(2) Within 100 days of the date of receipt of the petition, FDA will notify the petitioner by letter that the petition has either been filed for comprehensive review or denied. The agency will deny a petition without reviewing the information contained in ''B. Summary of Scientific Data'' if the information in ''A. Preliminary Requirements'' is inadequate in explaining how the substance conforms to the requirements of § 101.14(b). If the petition is denied, the notification will state the reasons therefor, including justification of the rejection of any report from an authoritative scientific body of the U.S. Government. If filed, the date of the notification letter becomes the date of filing for the purposes of this regulation. If FDA does not act within such 100 days, the petition shall be deemed to be denied unless an extension is mutually agreed upon by FDA and the petitioner. A petition that has been denied, or has been deemed to be denied, without filing will not be made available to the public. A filed petition

will be available to the public to the extent provided under paragraph (e) of this section.

(3) Within 90 days of the date of filing, FDA will by letter of notification to the petitioner:

(i) Deny the petition, or

(ii) Inform the petitioner that a proposed regulation to provide for the requested use of the health claim will be published in the FEDERAL REGISTER. If the petition is denied, the notification will state the reasons therefor, including justification for the rejection of any report from an authoritative scientific body of the U.S. Government. FDA will publish the proposal to amend the regulations to provide for the requested use of the health claim in the FEDERAL REGISTER within 90 days of the date of filing. The proposal will also announce the availability of the petition for public review.

(iii) If FDA does not act within 90 days of the date of filing, the petition shall be deemed to be denied unless an extension is mutually agreed upon by FDA and the petitioner.

(4)(i) Within 270 of the date of publication of the proposal, FDA will publish a final rule that either authorizes use of the health claim or explains why the agency has decided not to authorize one.

(ii) For cause, FDA may extend, no more than twice, the period in which it will publish a final rule; each such extension will be for no more than 90 days. FDA will publish a notice of each extension in the FEDERAL REGISTER. The document will state the basis for the extension, the length of the extension, and the date by which the final rule will be published, which date shall be within 540 days of the date of receipt of the petition.

[58 FR 2534, Jan. 6, 1993; 58 FR 17097, Apr. 1, 1993, as amended at 59 FR 425, Jan. 4, 1994; 62 FR 28232, May 22, 1997; 62 FR 40599, July 29, 1997; 63 FR 26719, May 14, 1998; 63 FR 40024, July 27, 1998; 66 FR 56035, Nov. 6, 2001]

§ 101.71 Health claims: claims not authorized.

Health claims not authorized for foods in conventional food form or for dietary supplements of vitamins, minerals, herbs, or other similar substances:

(a) Dietary fiber and cardiovascular disease.

(b) Zinc and immune function in the elderly.

[58 FR 2534, Jan. 6, 1993, as amended at 58 FR 2548, 2578, 2620, 2639, 2664, 2714, Jan. 6, 1993; 58 FR 17100, Apr. 1, 1993; 59 FR 437, Jan. 4, 1994; 65 FR 58918, Oct. 3, 2000]

§ 101.72 Health claims: calcium, vitamin D, and osteoporosis.

(a) *Relationship between calcium, vitamin D, and osteoporosis.* An inadequate intake of calcium or calcium and vitamin D contributes to low peak bone mass, which has been identified as one of many risk factors in the development of osteoporosis. Peak bone mass is the total quantity of bone present at maturity, and experts believe that it has the greatest bearing on whether a person will be at risk of developing osteoporosis and related bone fractures later in life. Another factor that influences total bone mass and susceptibility to osteoporosis is the rate of bone loss after skeletal maturity. Vitamin D is required for normal absorption of calcium and to prevent the occurrence of high serum parathyroid hormone (PTH) concentration, which stimulates mobilization of calcium from the skeleton and can lower bone mass. Calcium, along with vitamin D and several other nutrients, is required for normal bone mineralization. While vitamin D is required for optimal bone mineralization, it is more effective when calcium intake is adequate. An adequate intake of calcium and vitamin D is thought to exert a positive effect during adolescence and early adulthood in optimizing the amount of bone that is laid down. However, the upper limit of peak bone mass is genetically determined. The mechanism through which adequate intakes of calcium and vitamin D and optimal peak bone mass reduce the risk of osteoporosis is thought to be as follows. All persons lose bone with age. Hence, those with higher bone mass at maturity take longer to reach the critically reduced mass at which bones can fracture easily. The rate of bone loss after skeletal maturity also influences the amount of bone present at old age and can influence an individual's risk of developing osteoporosis.

Maintenance of adequate intakes of calcium and vitamin D later in life is thought to be important in reducing the rate of bone loss particularly in the elderly and in women during the first decade following menopause, but a significant protective effect is also seen among men and younger women.

(b) *Significance of calcium or calcium and vitamin D.* Adequate calcium intake, or adequate calcium and vitamin D intake, is not the only recognized risk factor in the development of osteoporosis, which is a multifactorial bone disease. Maintenance of adequate calcium and vitamin D intakes throughout life is necessary to achieve optimal peak bone mass and to reduce the risk of osteoporosis in later life. However, vitamin D is most effective in this regard when calcium intake is adequate. Increasing intake of calcium has been shown to have beneficial effects on bone health independent of dietary vitamin D.

(c) *Requirements.* (1) All requirements set forth in § 101.14 shall be met.

(2) *Specific requirements*—(i) *Nature of the claim.* A health claim associating calcium or, when appropriate, calcium and vitamin D with a reduced risk of osteoporosis may be made on the label or labeling of a food described in paragraphs (c)(2)(ii) and (d)(1) of this section, provided that:

(A) The claim makes clear the importance of adequate calcium intake, or when appropriate, adequate calcium and vitamin D intake, throughout life, in a healthful diet, are essential to reduce osteoporosis risk. The claim does not imply that adequate calcium intake, or when appropriate, adequate calcium and vitamin D intake, is the only recognized risk factor for the development of osteoporosis;

(B) The claim does not attribute any degree of reduction in risk of osteoporosis to maintaining an adequate dietary calcium intake, or when appropriate, an adequate dietary calcium and vitamin D intake, throughout life.

(ii) *Nature of the food.* (A) The food shall meet or exceed the requirements for a ''high'' level of calcium as defined in § 101.54(b);

(B) The calcium content of the product shall be assimilable;

(C) Dietary supplements shall meet the United States Pharmacopeia (USP) standards for disintegration and dissolution applicable to their component calcium salts, except that dietary supplements for which no USP standards exist shall exhibit appropriate assimilability under the conditions of use stated on the product label;

(D) A food or total daily recommended supplement intake shall not contain more phosphorus than calcium on a weight per weight basis.

(d) *Optional information.* (1) The claim may include the term ''vitamin D'' if the food meets or exceeds the requirements for a ''high'' level of vitamin D as defined in § 101.54(b);

(2) The claim may include information from paragraphs (a) and (b) of this section.

(3) The claim may make reference to physical activity.

(4) The claim may include information on the number of people in the United States, including the number of people in certain subpopulations in the United States, who have osteoporosis or low bone density. The sources of this information must be identified, and it must be current information from the National Center for Health Statistics, the National Institutes of Health, or the National Osteoporosis Foundation.

(5) The claim may state that the role of adequate calcium intake, or when appropriate, the role of adequate calcium and vitamin D intake, throughout life is linked to reduced risk of osteoporosis through the mechanism of optimizing peak bone mass during adolescence and early adulthood. The phrase ''build and maintain good bone health'' may be used to convey the concept of optimizing peak bone mass. The claim may also state that adequate intake of calcium, or when appropriate, adequate intake of calcium and vitamin D, is linked to reduced risk of osteoporosis through the mechanism of slowing the rate of bone loss for persons with a family history of the disease, post-menopausal women, and elderly men and women.

(e) *Model health claims.* The following model health claims may be used in food labeling to describe the relationship between calcium and osteoporosis:

Adequate calcium throughout life, as part of a well-balanced diet, may reduce the risk of osteoporosis.

Adequate calcium as part of a healthful diet, along with physical activity, may reduce the risk of osteoporosis in later life.

(f) *Model additional health claims for calcium and vitamin D.* The following model health claims may be used in food labeling to describe the relationship between calcium, vitamin D, and osteoporosis:

Adequate calcium and vitamin D throughout life, as part of a well-balanced diet, may reduce the risk of osteoporosis.

Adequate calcium and vitamin D as part of a healthful diet, along with physical activity, may reduce the risk of osteoporosis in later life.

[73 FR 56486, Sept. 29, 2008]

§ 101.73 Health claims: dietary lipids and cancer.

(a) *Relationship between fat and cancer.* (1) Cancer is a constellation of more than 100 different diseases, each characterized by the uncontrolled growth and spread of abnormal cells. Cancer has many causes and stages in its development. Both genetic and environmental risk factors may affect the risk of cancer. Risk factors include a family history of a specific type of cancer, cigarette smoking, alcohol consumption, overweight and obesity, ultraviolet or ionizing radiation, exposure to cancer-causing chemicals, and dietary factors.

(2) Among dietary factors, the strongest positive association has been found between total fat intake and risk of some types of cancer. Based on the totality of the publicly available scientific evidence, there is significant scientific agreement among experts, qualified by training and experience to evaluate such evidence, that diets high in total fat are associated with an increased cancer risk. Research to date, although not conclusive, demonstrates that the total amount of fats, rather than any specific type of fat, is positively associated with cancer risk. The mechanism by which total fat affects cancer has not yet been established.

(3) A question that has been the subject of considerable research is whether the effect of fat on cancer is site-specific. Neither human nor animal studies are consistent in the association of fat intake with specific cancer sites.

(4) Another question that has been raised is whether the association of total fat intake to cancer risk is independently associated with energy intakes, or whether the association of fat with cancer risk is the result of the higher energy (caloric) intake normally associated with high fat intake. FDA has concluded that evidence from both animal and human studies indicates that total fat intake alone, independent of energy intake, is associated with cancer risk.

(b) *Significance of the relationship between fat intake and risk of cancer.* (1) Cancer is ranked as a leading cause of death in the United States. The overall economic costs of cancer, including direct health care costs and losses due to morbidity and mortality, are very high.

(2) U.S. diets tend to be high in fat and high in calories. The average U.S. diet is estimated to contain 36 to 37 percent of calories from total fat. Current dietary guidelines from the Federal Government and other national health professional organizations recommend that dietary fat intake be reduced to a level of 30 percent or less of energy (calories) from total fat. In order to reduce intake of total fat, individuals should choose diets which are high in vegetables, fruits, and grain products (particularly whole grain products), choose lean cuts of meats, fish, and poultry, substitute low-fat dairy products for higher fat products, and use fats and oils sparingly.

(c) *Requirements.* (1) All requirements set forth in § 101.14 shall be met.

(2) *Specific requirements*—(i) *Nature of the claim.* A health claim associating diets low in fat with reduced risk of cancer may be made on the label or labeling of a food described in paragraph (c)(2)(ii) of this section, provided that:

(A) The claim states that diets low in fat ''may'' or ''might'' reduce the risk of some cancers;

(B) In specifying the disease, the claim uses the following terms: ''some types of cancer'' or ''some cancers'';

(C) In specifying the nutrient, the claim uses the term ''total fat'' or ''fat'';

(D) The claim does not specify types of fat or fatty acid that may be related to the risk of cancer;

(E) The claim does not attribute any degree of cancer risk reduction to diets low in fat; and

(F) The claim indicates that the development of cancer depends on many factors.

(ii) *Nature of the food.* The food shall meet all of the nutrient content requirements of § 101.62 for a ''low fat'' food; except that fish and game meats (i.e., deer, bison, rabbit, quail, wild turkey, geese, ostrich) may meet the requirements for ''extra lean'' in § 101.62.

(d) *Optional information.* (1) The claim may identify one or more of the following risk factors for development of cancer: Family history of a specific type of cancer, cigarette smoking, alcohol consumption, overweight and obesity, ultraviolet or ionizing radiation, exposure to cancer-causing chemicals, and dietary factors.

(2) The claim may include information from paragraphs (a) and (b) of this section which summarize the relationship between dietary fat and cancer and the significance of the relationship.

(3) The claim may indicate that it is consistent with ''Nutrition and Your Health: Dietary Guidelines for Americans,'' U.S. Department of Agriculture (USDA) and Department of Health and Human Services (DHHS), Government Printing Office.

(4) The claim may include information on the number of people in the United States who have cancer. The sources of this information must be identified, and it must be current information from the National Center for Health Statistics, the National Institutes of Health, or ''Nutrition and Your Health: Dietary Guidelines for Americans,'' USDA and DHHS, Government Printing Office.

(e) *Model health claims.* The following model health claims may be used in food labeling to describe the relationship between dietary fat and cancer:

(1) Development of cancer depends on many factors. A diet low in total fat may reduce the risk of some cancers.

(2) Eating a healthful diet low in fat may help reduce the risk of some types of cancers. Development of cancer is associated with many factors, including a family history of the disease, cigarette smoking, and what you eat.

[58 FR 2801, Jan. 6, 1993; 58 FR 17343, Apr. 2, 1993]

§ 101.74 Health claims: sodium and hypertension.

(a) *Relationship between sodium and hypertension (high blood pressure).* (1) Hypertension, or high blood pressure, generally means a systolic blood pressure of greater than 140 millimeters of mercury (mm Hg) or a diastolic blood pressure of greater than 90 mm Hg. Normotension, or normal blood pressure, is a systolic blood pressure below 140 mm Hg and diastolic blood pressure below 90 mm Hg. Sodium is specified here as the chemical entity or electrolyte ''sodium'' and is distinguished from sodium chloride, or salt, which is 39 percent sodium by weight.

(2) The scientific evidence establishes that diets high in sodium are associated with a high prevalence of hypertension or high blood pressure and with increases in blood pressure with age, and that diets low in sodium are associated with a low prevalence of hypertension or high blood pressure and with a low or no increase of blood pressure with age.

(b) *Significance of sodium in relation to high blood pressure.* (1) High blood pressure is a public health concern primarily because it is a major risk factor for mortality from coronary heart disease and stroke. Early management of high blood pressure is a major public health goal that can assist in reducing mortality associated with coronary heart disease and stroke. There is a continuum of mortality risk that increases as blood pressures rise. Individuals with high blood pressure are at greatest risk, and individuals with moderately high, high normal, and normal blood pressure are at steadily decreasing risk. The scientific evidence indicates that reducing sodium intake lowers blood pressure and associated risks in many but not all hypertensive individuals. There is also evidence that reducing sodium intake lowers blood pressure and associated risks in many

but not all normotensive individuals as well.

(2) The populations at greatest risk for high blood pressure, and those most likely to benefit from sodium reduction, include those with family histories of high blood pressure, the elderly, males because they develop hypertension earlier in life than females, and black males and females. Although some population groups are at greater risk than others, high blood-pressure is a disease of public health concern for all population groups. Sodium intake, alcohol consumption, and obesity are identified risk factors for high blood pressure.

(3) Sodium intakes exceed recommended levels in almost every group in the United States. One of the major public health recommendations relative to high blood pressure is to decrease consumption of salt. On a population-wide basis, reducing the average sodium intake would have a small but significant effect on reducing the average blood pressure, and, consequently, reducing mortality from coronary heart disease and stroke.

(4) Sodium is an essential nutrient, and experts have recommended a safe minimum level of 500 milligrams (mg) sodium per day and an upper level of 2,400 mg sodium per day, the FDA Daily Value for sodium.

(c) *Requirements.* (1) All requirements set forth in § 101.14 shall be met.

(2) *Specific requirements*—(i) *Nature of the claim.* A health claim associating diets low in sodium with reduced risk of high blood pressure may be made on the label or labeling of a food described in paragraph (c)(2)(ii) of this section, provided that:

(A) The claim states that diets low in sodium ''may'' or ''might'' reduce the risk of high blood pressure;

(B) In specifying the disease, the claim uses the term ''high blood pressure'';

(C) In specifying the nutrient, the claim uses the term ''sodium'';

(D) The claim does not attribute any degree of reduction in risk of high blood pressure to diets low in sodium; and

(E) The claim indicates that development of high blood pressure depends on many factors.

(ii) *Nature of the food.* The food shall meet all of the nutrient content requirements of § 101.61 for a ''low sodium'' food.

(d) *Optional information.* (1) The claim may identify one or more of the following risk factors for development of high blood pressure in addition to dietary sodium consumption: Family history of high blood pressure, growing older, alcohol consumption, and excess weight.

(2) The claim may include information from paragraphs (a) and (b) of this section, which summarizes the relationship between dietary sodium and high blood pressure and the significance of the relationship.

(3) The claim may include information on the number of people in the United States who have high blood pressure. The sources of this information must be identified, and it must be current information from the National Center for Health Statistics, the National Institutes of Health, or ''Nutrition and Your Health: Dietary Guidelines for Americans,'' U.S. Department of Health and Human Services (DHHS) and U.S. Department of Argiculture (USDA), Government Printing Office.

(4) The claim may indicate that it is consistent with ''Nutrition and Your Health: U.S. Dietary Guidelines for Americans, DHHS and USDA, Government Printing Office.

(5) In specifying the nutrient, the claim may include the term ''salt'' in addition to the term ''sodium.''

(6) In specifying the disease, the claim may include the term ''hypertension'' in addition to the term ''high blood pressure.''

(7) The claim may state that individuals with high blood pressure should consult their physicians for medical advice and treatment. If the claim defines high or normal blood pressure, then the health claim must state that individuals with high blood pressure should consult their physicians for medical advice and treatment.

(e) *Model health claims.* The following are model health claims that may be used in food labeling to describe the relationship between dietary sodium and high blood pressure:

(1) Diets low in sodium may reduce the risk of high blood pressure, a disease associated with many factors.

(2) Development of hypertension or high blood pressure depends on many factors. [This product] can be part of a low sodium, low salt diet that might reduce the risk of hypertension or high blood pressure.

[58 FR 2836, Jan. 6, 1993; 58 FR 17100, Apr. 1, 1993]

§ 101.75 Health claims: dietary saturated fat and cholesterol and risk of coronary heart disease.

(a) *Relationship between dietary saturated fat and cholesterol and risk of coronary heart disease.* (1) Cardiovascular disease means diseases of the heart and circulatory system. Coronary heart disease is the most common and serious form of cardiovascular disease and refers to diseases of the heart muscle and supporting blood vessels. High blood total- and low density lipoprotein (LDL)- cholesterol levels are major modifiable risk factors in the development of coronary heart disease. High coronary heart disease rates occur among people with high blood cholesterol levels of 240 milligrams/decaliter (mg/dL) (6.21 millimoles per liter (mmol/L)) or above and LDL-cholesterol levels of 160 mg/dL (4.13 mmol/L) or above. Borderline high risk blood cholesterol levels range from 200 to 239 mg/dL (5.17 to 6.18 mmol/L) and 130 to 159 mg/dL (3.36 to 4.11 mmol/L) of LDL-cholesterol. Dietary lipids (fats) include fatty acids and cholesterol. Total fat, commonly referred to as fat, is composed of saturated fat (fatty acids containing no double bonds), and monounsaturated and polyunsaturated fat (fatty acids containing one or more double bonds).

(2) The scientific evidence establishes that diets high in saturated fat and cholesterol are associated with increased levels of blood total- and LDL-cholesterol and, thus, with increased risk of coronary heart disease. Diets low in saturated fat and cholesterol are associated with decreased levels of blood total- and LDL-cholesterol, and thus, with decreased risk of developing coronary heart disease.

(b) *Significance of the relationship between dietary saturated fat and cholesterol and risk of coronary heart disease.* (1) Coronary heart disease is a major public health concern in the United States, primarily because it accounts for more deaths than any other disease or group of diseases. Early management of risk factors for coronary heart disease is a major public health goal that can assist in reducing risk of coronary heart disease. There is a continuum of mortality risk from coronary heart disease that increases with increasing levels of blood LDL-cholesterol. Individuals with high blood LDL-cholesterol are at greatest risk. A larger number of individuals with more moderately elevated cholesterol also have increased risk of coronary events; such individuals comprise a substantial proportion of the adult U.S. population. The scientific evidence indicates that reducing saturated fat and cholesterol intakes lowers blood LDL-cholesterol and risk of heart disease in most individuals. There is also evidence that reducing saturated fat and cholesterol intakes in persons with blood cholesterol levels in the normal range also reduces risk of heart disease.

(2) Other risk factors for coronary heart disease include a family history of heart disease, high blood pressure, diabetes, cigarette smoking, obesity (body weight 30 percent greater than ideal body weight), and lack of regular physical exercise.

(3) Intakes of saturated fat exceed recommended levels in many people in the United States. Intakes of cholesterol are, on average, at or above recommended levels. One of the major public health recommendations relative to coronary heart disease risk is to consume less than 10 percent of calories from saturated fat, and an average of 30 percent or less of total calories from all fat. Recommended daily cholesterol intakes are 300 mg or less per day.

(c) *Requirements.* (1) All requirements set forth in § 101.14 shall be met, except § 101.14(e)(6) with respect to a raw fruit or vegetable.

(2) *Specific requirements*—(i) *Nature of the claim.* A health claim associating diets low in saturated fat and cholesterol with reduced risk of coronary heart disease may be made on the label

or labeling of a food described in paragraph (c)(2)(ii) of this section provided that:

(A) The claim states that diets low in saturated fat and cholesterol ''may'' or ''might'' reduce the risk of heart disease;

(B) In specifying the disease, the claim uses the terms ''heart disease'' or ''coronary heart disease;''

(C) In specifying the nutrient, the claim uses the terms ''saturated fat'' and ''cholesterol'' and lists both;

(D) The claim does not attribute any degree of risk reduction for coronary heart disease to diets low in dietary saturated fat and cholesterol; and

(E) The claim states that coronary heart disease risk depends on many factors.

(ii) *Nature of the food.* (A) The food shall meet all of the nutrient content requirements of § 101.62 for a ''low saturated fat'' and ''low cholesterol'' food.

(B) The food shall meet the nutrient content requirements of § 101.62 for a ''low fat'' food, unless it is a raw fruit or vegetable; except that fish and game meats (*i.e.*, deer, bison, rabbit, quail, wild turkey, geese, and ostrich) may meet the requirements for ''extra lean'' in § 101.62.

(d) *Optional information.* (1) The claim may identify one or more of the following risk factors in addition to saturated fat and cholesterol about which there is general scientific agreement that they are major risk factors for this disease: A family history of coronary heart disease, elevated blood total and LDL-cholesterol, excess body weight, high blood pressure, cigarette smoking, diabetes, and physical inactivity.

(2) The claim may indicate that the relationship of saturated fat and cholesterol to heart disease is through the intermediate link of ''blood cholesterol'' or ''blood total- and LDL cholesterol.''

(3) The claim may include information from paragraphs (a) and (b) of this section, which summarize the relationship between dietary saturated fat and cholesterol and risk of coronary heart disease, and the significance of the relationship.

(4) In specifying the nutrients, the claim may include the term ''total fat'' in addition to the terms ''saturated fat'' and ''cholesterol''.

(5) The claim may include information on the number of people in the United States who have coronary heart disease. The sources of this information shall be identified, and it shall be current information from the National Center for Health Statistics, the National Institutes of Health, or ''Nutrition and Your Health: Dietary Guidelines for Americans,'' U.S. Department of Health and Human Services (DHHS) and U.S. Department of Agriculture (USDA), Government Printing Office.

(6) The claim may indicate that it is consistent with ''Nutrition and Your Health: Dietary Guidelines for Americans,'' DHHS and USDA, Government Printing Office.

(7) The claim may state that individuals with elevated blood total- or LDL-cholesterol should consult their physicians for medical advice and treatment. If the claim defines high or normal blood total- or LDL-cholesterol levels, then the claim shall state that individuals with high blood cholesterol should consult their physicians for medical advice and treatment.

(e) *Model health claims.*The following are model health claims that may be used in food labeling to describe the relationship between dietary saturated fat and cholesterol and risk of heart disease:

(1) While many factors affect heart disease, diets low in saturated fat and cholesterol may reduce the risk of this disease;

(2) Development of heart disease depends upon many factors, but its risk may be reduced by diets low in saturated fat and cholesterol and healthy lifestyles;

(3) Development of heart disease depends upon many factors, including a family history of the disease, high blood LDL-cholesterol, diabetes, high blood pressure, being overweight, cigarette smoking, lack of exercise, and the type of dietary pattern. A healthful diet low in saturated fat, total fat, and cholesterol, as part of a healthy lifestyle, may lower blood cholesterol levels and may reduce the risk of heart disease;

(4) Many factors, such as a family history of the disease, increased blood-

and LDL-cholesterol levels, high blood pressure, cigarette smoking, diabetes, and being overweight, contribute to developing heart disease. A diet low in saturated fat, cholesterol, and total fat may help reduce the risk of heart disease; and

(5) Diets low in saturated fat, cholesterol, and total fat may reduce the risk of heart disease. Heart disease is dependent upon many factors, including diet, a family history of the disease, elevated blood LDL-cholesterol levels, and physical inactivity.

[58 FR 2757, Jan. 6, 1993, as amended at 81 FR 91722, Dec. 19, 2016]

§ 101.76 Health claims: fiber-containing grain products, fruits, and vegetables and cancer.

(a) *Relationship between diets low in fat and high in fiber-containing grain products, fruits, and vegetables and cancer risk.* (1) Cancer is a constellation of more than 100 different diseases, each characterized by the uncontrolled growth and spread of abnormal cells. Cancer has many causes and stages in its development. Both genetic and environmental risk factors may affect the risk of cancer. Risk factors include: A family history of a specific type of cancer, cigarette smoking, overweight and obesity, alcohol consumption, ultraviolet or ionizing radiation, exposure to cancer-causing chemicals, and dietary factors.

(2) The scientific evidence establishes that diets low in fat and high in fiber-containing grain products, fruits, and vegetables are associated with a reduced risk of some types of cancer. Although the specific role of total dietary fiber, fiber components, and the multiple nutrients and other substances contained in these foods are not yet fully understood, many studies have shown that diets low in fat and high in fiber-containing foods are associated with reduced risk of some types of cancer.

(b) *Significance of the relationship between consumption of diets low in fat and high in fiber-containing grain products, fruits, and vegetables and risk of cancer.* (1) Cancer is ranked as a leading cause of death in the United States. The overall economic costs of cancer, including direct health care costs and losses due to morbidity and mortality, are very high.

(2) U.S. diets tend to be high in fat and low in grain products, fruits, and vegetables. Studies in various parts of the world indicate that populations who habitually consume a diet high in plant foods have lower risks of some cancers. These diets generally are low in fat and rich in many nutrients, including, but not limited to, dietary fiber. Current dietary guidelines from Federal government agencies and nationally recognized health professional organizations recommend decreased consumption of fats (less than 30 percent of calories), maintenance of desirable body weight, and increased consumption of fruits and vegetables (five or more servings daily), and grain products (six or more servings daily).

(c) *Requirements.* (1) All requirements set forth in § 101.14 shall be met.

(2) *Specific requirements*—(i) *Nature of the claim.* A health claim associating diets low in fat and high in fiber-containing grain products, fruits, and vegetables with reduced risk of cancer may be made on the label or labeling of a food described in paragraph (c)(2)(ii) of this section, provided that:

(A) The claim states that diets low in fat and high in fiber-containing grain products, fruits, and vegetables ''may'' or ''might'' reduce the risk of some cancers;

(B) In specifying the disease, the claim uses the following terms: ''some types of cancer,'' or ''some cancers'';

(C) The claim is limited to grain products, fruits, and vegetables that contain dietary fiber;

(D) The claim indicates that development of cancer depends on many factors;

(E) The claim does not attribute any degree of cancer risk reduction to diets low in fat and high in fiber-containing grain products, fruits, and vegetables;

(F) In specifying the dietary fiber component of the labeled food, the claim uses the term ''fiber'', ''dietary fiber'' or ''total dietary fiber''; and

(G) The claim does not specify types of dietary fiber that may be related to risk of cancer.

(ii) *Nature of the food.* (A) The food shall be or shall contain a grain product, fruit, or vegetable.

(B) The food shall meet the nutrient content requirements of § 101.62 for a ''low fat'' food.

(C) The food shall meet, without fortification, the nutrient content requirements of § 101.54 for a ''good source'' of dietary fiber.

(d) *Optional information.* (1) The claim may include information from paragraphs (a) and (b) of this section, which summarize the relationship between diets low in fat and high in fiber-containing grain products, fruits, and vegetables, and some types of cancer and the significance of the relationship.

(2) The claim may identify one or more of the following risk factors for development of cancer: Family history of a specific type of cancer, cigarette smoking, overweight and obesity, alcohol consumption, ultraviolet or ionizing radiation, exposure to cancer causing chemicals, and dietary factors.

(3) The claim may indicate that it is consistent with ''Nutrition and Your Health: Dietary Guidelines for Americans,'' U.S. Department of Agriculture (USDA) and Department of Health and Human Services (DHHS), Government Printing Office.

(4) The claim may include information on the number of people in the United States who have cancer. The sources of this information must be identified, and it must be current information from the National Center for Health Statistics, the National Institutes of Health, or ''Nutrition and Your Health: Dietary Guidelines for Americans,'' USDA and DHHS, Government Printing Office.

(e) *Model health claims.* The following model health claims may be used in food labeling to characterize the relationship between diets low in fat and high in fiber-containing grain products, fruits, and vegetables and cancer risk:

(1) Low fat diets rich in fiber-containing grain products, fruits, and vegetables may reduce the risk of some types of cancer, a disease associated with many factors.

(2) Development of cancer depends on many factors. Eating a diet low in fat and high in grain products, fruits, and vegetables that contain dietary fiber may reduce your risk of some cancers.

[58 FR 2548, Jan. 6, 1993]

§ 101.77 Health claims: fruits, vegetables, and grain products that contain fiber, particularly soluble fiber, and risk of coronary heart disease.

(a) *Relationship between diets low in saturated fat and cholesterol and high in fruits, vegetables, and grain products that contain fiber, particularly soluble fiber, and risk of coronary heart disease.* (1) Cardiovascular disease means diseases of the heart and circulatory system. Coronary heart disease is the most common and serious form of cardiovascular disease and refers to diseases of the heart muscle and supporting blood vessels. High blood total- and low density lipoprotein (LDL)- cholesterol levels are major modifiable risk factors in the development of coronary heart disease. High coronary heart disease rates occur among people with high blood cholesterol levels of 240 milligrams per deciliter (mg/dL) (6.21 (mmol/L)) or above and LDL-cholesterol levels of 160 mg/dL (4.13 mmol/L) or above. Borderline high risk blood cholesterol levels range from 200 to 239 mg/dL (5.17 to 6.18 mmol/L) and 130 to 159 mg/dL (3.36 to 4.11 mmol/L) of LDL-cholesterol. Dietary lipids (fats) include fatty acids and cholesterol. Total fat, commonly referred to as fat, is composed of saturated fat (fatty acids containing no double bonds), and monounsaturated and polyunsaturated fat (fatty acids containing one or more double bonds).

(2) The scientific evidence establishes that diets high in saturated fat and cholesterol are associated with increased levels of blood total- and LDL-cholesterol and, thus, with increased risk of coronary heart disease. Diets low in saturated fat and cholesterol are associated with decreased levels of blood total- and LDL-cholesterol, and thus, with decreased risk of developing coronary heart disease.

(3) Populations with relatively low blood cholesterol levels tend to have dietary patterns that are not only low in total fat, especially saturated fat and cholesterol, but are also relatively high in fruits, vegetables, and grain products. Although the specific roles of these plant foods are not yet fully understood, many studies have shown that diets high in plant foods are associated with reduced risk of coronary

heart disease. These studies correlate diets rich in fruits, vegetables, and grain products and nutrients from these diets, such as some types of fiber, with reduced coronary heart disease risk. Persons consuming these diets frequently have high intakes of dietary fiber, particularly soluble fibers. Currently, there is not scientific agreement as to whether a particular type of soluble fiber is beneficial, or whether the observed protective effects of fruits, vegetables, and grain products against heart disease are due to other components, or a combination of components, in these diets, including, but not necessarily limited to, some types of soluble fiber, other fiber components, other characteristics of the complex carbohydrate content of these foods, other nutrients in these foods, or displacement of saturated fat and cholesterol from the diet.

(b) *Significance of the relationship between diets low in saturated fat and cholesterol, and high in fruits, vegetables, and grain products that contain fiber, particularly soluble fiber, and risk of coronary heart disease.* (1) Coronary heart disease is a major public health concern in the United States, primarily because it accounts for more deaths than any other disease or group of diseases. Early management of risk factors for coronary heart disease is a major public health goal that can assist in reducing risk of coronary heart disease. There is a continuum of mortality risk from coronary heart disease that increases with increasing levels of blood LDL-cholesterol. Individuals with high blood LDL-cholesterol are at greatest risk. A larger number of individuals with more moderately elevated cholesterol also have increased risk of coronary events; such individuals comprise a substantial proportion of the adult U.S. population. The scientific evidence indicates that reducing saturated fat and cholesterol intakes lowers blood LDL-cholesterol and risk of heart disease in most individuals, including persons with blood cholesterol levels in the normal range. Additionally, consuming diets high in fruits, vegetables, and grain products, foods that contain soluble fiber, may be a useful adjunct to a low saturated fat and low cholesterol diet.

(2) Other risk factors for coronary heart disease include a family history of heart disease, high blood pressure, diabetes, cigarette smoking, obesity (body weight 30 percent greater than ideal body weight), and lack of regular physical exercise.

(3) Intakes of saturated fat exceed recommended levels in many people in the United States. Intakes of cholesterol are, on average, at or above recommended levels. Intakes of fiber-containing fruits, vegetables, and grain products are about half of recommended intake levels. One of the major public health recommendations relative to coronary heart disease risk is to consume less than 10 percent of calories from saturated fat, and an average of 30 percent or less of total calories from all fat. Recommended daily cholesterol intakes are 300 mg or less per day. Recommended total dietary fiber intakes are about 25 grams (g) daily, of which about 25 percent (about 6 g) should be soluble fiber.

(4) Current dietary guidance recommendations encourage decreased consumption of dietary fat, especially saturated fat and cholesterol, and increased consumption of fiber-rich foods to help lower blood LDL-cholesterol levels. Results of numerous studies have shown that fiber-containing fruits, vegetables, and grain products can help lower blood LDL-cholesterol.

(c) *Requirements.* (1) All requirements set forth in § 101.14 shall be met.

(2) *Specific requirements*—(i) *Nature of the claim.* A health claim associating diets low in saturated fat and cholesterol and high in fruits, vegetables, and grain products that contain fiber, particularly soluble fiber, with reduced risk of heart disease may be made on the label or labeling of a food described in paragraph (c)(2)(ii) of this section, provided that:

(A) The claim states that diets low in saturated fat and cholesterol and high in fruits, vegetables, and grain products that contain fiber ''may'' or ''might'' reduce the risk of heart disease;

(B) In specifying the disease, the claim uses the following terms: ''heart disease'' or ''coronary heart disease;''

(C) The claim is limited to those fruits, vegetables, and grains that contain fiber;

(D) In specifying the dietary fiber, the claim uses the term ''fiber,'' ''dietary fiber,'' ''some types of dietary fiber,'' ''some dietary fibers,'' or ''some fibers;'' the term ''soluble fiber'' may be used in addition to these terms;

(E) In specifying the fat component, the claim uses the terms ''saturated fat'' and ''cholesterol;'' and

(F) The claim indicates that development of heart disease depends on many factors; and

(G) The claim does not attribute any degree of risk reduction for coronary heart disease to diets low in saturated fat and cholesterol and high in fruits, vegetables, and grain products that contain fiber.

(ii) *Nature of the food.* (A) The food shall be or shall contain a fruit, vegetable, or grain product.

(B) The food shall meet the nutrient content requirements of §101.62 for a ''low saturated fat,'' ''low cholesterol,'' and ''low fat'' food.

(C) The food contains, without fortification, at least 0.6 g of soluble fiber per reference amount customarily consumed;

(D) The content of soluble fiber shall be declared in the nutrition information panel, consistent with §101.9(c)(6)(i)(A).

(d) *Optional information.* (1) The claim may identify one or more of the following risk factors for heart disease about which there is general scientific agreement: A family history of coronary heart disease, elevated blood-, total- and LDL-cholesterol, excess body weight, high blood pressure, cigarette smoking, diabetes, and physical inactivity.

(2) The claim may indicate that the relationship of diets low in saturated fat and cholesterol, and high in fruits, vegetables, and grain products that contain fiber to heart disease is through the intermediate link of ''blood cholesterol'' or ''blood total- and LDL-cholesterol.''

(3) The claim may include information from paragraphs (a) and (b) of this section, which summarize the relationship between diets low in saturated fat and cholesterol and high in fruits, vegetables, and grain products that contain fiber and coronary heart disease, and the significance of the relationship.

(4) In specifying the nutrients, the claim may include the term ''total fat'' in addition to the terms ''saturated fat'' and ''cholesterol.''

(5) The claim may indicate that it is consistent with ''Nutrition and Your Health: Dietary Guidelines for Americans,'' U.S. Department of Agriculture (USDA) and Department of Health and Human Services (DHHS), Government Printing Office (GPO).

(6) The claim may state that individuals with elevated blood total- and LDL-cholesterol should consult their physicians for medical advice and treatment. If the claim defines high or normal blood total- and LDL-cholesterol levels, then the claim shall state that individuals with high blood cholesterol should consult their physicians for medical advice and treatment.

(7) The claim may include information on the number of people in the United States who have heart disease. The sources of this information shall be identified, and it shall be current information from the National Center for Health Statistics, the National Institutes of Health, or ''Nutrition and Your Health: Dietary Guidelines for Americans,'' USDA and DHHS, GPO.

(e) *Model health claims.* The following model health claims may be used in food labeling to characterize the relationship between diets low in saturated fat and cholesterol and high in fruits, vegetables, and grain products that contain soluble fiber:

(1) Diets low in saturated fat and cholesterol and rich in fruits, vegetables, and grain products that contain some types of dietary fiber, particularly soluble fiber, may reduce the risk of heart disease, a disease associated with many factors.

(2) Development of heart disease depends on many factors. Eating a diet low in saturated fat and cholesterol and high in fruits, vegetables, and grain products that contain fiber may lower blood cholesterol levels and reduce your risk of heart disease.

[58 FR 2578, Jan. 6, 1993]

§ 101.78 Health claims: fruits and vegetables and cancer.

(a) *Relationship between substances in diets low in fat and high in fruits and vegetables and cancer risk.* (1) Cancer is a constellation of more than 100 different diseases, each characterized by the uncontrolled growth and spread of abnormal cells. Cancer has many causes and stages in its development. Both genetic and environmental risk factors may affect the risk of cancer. Risk factors include a family history of a specific type of cancer, cigarette smoking, alcohol consumption, overweight and obesity, ultraviolet or ionizing radiation, exposure to cancer-causing chemicals, and dietary factors.

(2) Although the specific roles of the numerous potentially protective substances in plant foods are not yet understood, many studies have shown that diets high in plant foods are associated with reduced risk of some types of cancers. These studies correlate diets rich in fruits and vegetables and nutrients from these diets, such as vitamin C, vitamin A, and dietary fiber, with reduced cancer risk. Persons consuming these diets frequently have high intakes of these nutrients. Currently, there is not scientific agreement as to whether the observed protective effects of fruits and vegetables against cancer are due to a combination of the nutrient components of diets rich in fruits and vegetables, including but not necessarily limited to dietary fiber, vitamin A (as beta-carotene) and vitamin C, to displacement of fat from such diets, or to intakes of other substances in these foods which are not nutrients but may be protective against cancer risk.

(b) *Significance of the relationship between consumption of diets low in fat and high in fruits and vegetables and risk of cancer.* (1) Cancer is ranked as a leading cause of death in the United States. The overall economic costs of cancer, including direct health care costs and losses due to morbidity and mortality, are very high.

(2) U.S. diets tend to be high in fat and low in fruits and vegetables. Studies in various parts of the world indicate that populations who habitually consume a diet high in plant foods have lower risks of some cancers. These diets generally are low in fat and rich in many nutrients, including, but not limited to, dietary fiber, vitamin A (as beta-carotene), and vitamin C. Current dietary guidelines from Federal Government agencies and nationally recognized health professional organizations recommend decreased consumption of fats (less than 30 percent of calories), maintenance of desirable body weight, and increased consumption of fruits and vegetables (5 or more servings daily), particularly those fruits and vegetables which contain dietary fiber, vitamin A, and vitamin C.

(c) *Requirements.* (1) All requirements set forth in § 101.14 shall be met.

(2) *Specific requirements*—(i) *Nature of the claim.* A health claim associating substances in diets low in fat and high in fruits and vegetables with reduced risk of cancer may be made on the label or labeling of a food described in paragraph (c)(2)(ii) of this section, provided that:

(A) The claim states that diets low in fat and high in fruits and vegetables ''may'' or ''might'' reduce the risk of some cancers;

(B) In specifying the disease, the claim uses the following terms: ''some types of cancer'', or ''some cancers'';

(C) The claim characterizes fruits and vegetables as foods that are low in fat and may contain vitamin A, vitamin C, and dietary fiber;

(D) The claim characterizes the food bearing the claim as containing one or more of the following, for which the food is a good source under § 101.54: dietary fiber, vitamin A, or vitamin C;

(E) The claim does not attribute any degree of cancer risk reduction to diets low in fat and high in fruits and vegetables;

(F) In specifying the fat component of the labeled food, the claim uses the term ''total fat'' or ''fat'';

(G) The claim does not specify types of fats or fatty acids that may be related to risk of cancer;

(H) In specifying the dietary fiber component of the labeled food, the claim uses the term ''fiber'', ''dietary fiber'', or ''total dietary fiber'';

(I) The claim does not specify types of dietary fiber that may be related to risk of cancer; and

(J) The claim indicates that development of cancer depends on many factors.

(ii) *Nature of the food.* (A) The food shall be or shall contain a fruit or vegetable.

(B) The food shall meet the nutrient content requirements of §101.62 for a ''low fat'' food.

(C) The food shall meet, without fortification, the nutrient content requirements of §101.54 for a ''good source'' of at least one of the following: vitamin A, vitamin C, or dietary fiber.

(d) *Optional information.* (1) The claim may include information from paragraphs (a) and (b) of this section, which summarize the relationship between diets low in fat and high in fruits and vegetables and some types of cancer and the significance of the relationship.

(2) The claim may identify one or more of the following risk factors for development of cancer: Family history of a specific type of cancer, cigarette smoking, alcohol consumption, overweight and obesity, ultraviolet or ionizing radiation, exposure to cancer-causing chemicals, and dietary factors.

(3) The claim may use the word ''beta-carotene'' in parentheses after the term vitamin A, provided that the vitamin A in the food bearing the claim is beta-carotene.

(4) The claim may indicate that it is consistent with ''Nutrition and Your Health: Dietary Guidelines for Americans,'' U.S. Department of Agriculture (USDA) and the Department of Health and Human Services (DHHS), Government Printing Office.

(5) The claim may include information on the number of people in the United States who have cancer. The sources of this information must be identified, and it must be current information from the National Center for Health Statistics, the National Institutes of Health, or ''Nutrition and Your Health: Dietary Guidelines for Americans,'' USDA and DHHS, Government Printing Office.

(e) *Model health claims.* The following model health claims may be used in food labeling to characterize the relationship between substances in diets low in fat and high in fruits and vegetables and cancer:

(1) Low fat diets rich in fruits and vegetables (foods that are low in fat and may contain dietary fiber, vitamin A, and vitamin C) may reduce the risk of some types of cancer, a disease associated with many factors. Broccoli is high in vitamins A and C, and it is a good source of dietary fiber.

(2) Development of cancer depends on many factors. Eating a diet low in fat and high in fruits and vegetables, foods that are low in fat and may contain vitamin A, vitamin C, and dietary fiber, may reduce your risk of some cancers. Oranges, a food low in fat, are a good source of fiber and vitamin C.

[58 FR 2639, Jan. 6, 1993]

§ 101.79 Health claims: Folate and neural tube defects.

(a) *Relationship between folate and neural tube defects*—(1) *Definition.* Neural tube defects are serious birth defects of the brain or spinal cord that can result in infant mortality or serious disability. The birth defects anencephaly and spina bifida are the most common forms of neural tube defects and account for about 90 percent of these defects. These defects result from failure of closure of the covering of the brain or spinal cord during early embryonic development. Because the neural tube forms and closes during early pregnancy, the defect may occur before a woman realizes that she is pregnant.

(2) *Relationship.* The available data show that diets adequate in folate may reduce the risk of neural tube defects. The strongest evidence for this relationship comes from an intervention study by the Medical Research Council of the United Kingdom that showed that women at risk of recurrence of a neural tube defect pregnancy who consumed a supplement containing 4 milligrams (mg)(4,000 micrograms (mcg)) folic acid daily before conception and continuing into early pregnancy had a reduced risk of having a child with a neural tube defect. (Products containing this level of folic acid are drugs). In addition, based on its review of a Hungarian intervention trial that reported periconceptional use of a multivitamin and multimineral preparation containing 800 mcg (0.8 mg) of

folic acid, and its review of the observational studies that reported periconceptional use of multivitamins containing 0 to 1,000 mcg of folic acid, the Food and Drug Administration concluded that most of these studies had results consistent with the conclusion that folate, at levels attainable in usual diets, may reduce the risk of neural tube defects.

(b) *Significance of folate*—(1) *Public health concern*. Neural tube defects occur in approximately 0.6 of 1,000 live births in the United States (i.e., approximately 6 of 10,000 live births; about 2,500 cases among 4 million live births annually). Neural tube defects are believed to be caused by many factors. The single greatest risk factor for a neural tube defect-affected pregnancy is a personal or family history of a pregnancy affected with a such a defect. However, about 90 percent of infants with a neural tube defect are born to women who do not have a family history of these defects. The available evidence shows that diets adequate in folate may reduce the risk of neural tube defects but not of other birth defects.

(2) *Populations at risk*. Prevalence rates for neural tube defects have been reported to vary with a wide range of factors including genetics, geography, socioeconomic status, maternal birth cohort, month of conception, race, nutrition, and maternal health, including maternal age and reproductive history. Women with a close relative (i.e., sibling, niece, nephew) with a neural tube defect, those with insulin-dependent diabetes mellitus, and women with seizure disorders who are being treated with valproic acid or carbamazepine are at significantly increased risk compared with women without these characteristics. Rates for neural tube defects vary within the United States, with lower rates observed on the west coast than on the east coast.

(3) *Those who may benefit*. Based on a synthesis of information from several studies, including those which used multivitamins containing folic acid at a daily dose level of ≥400 mcg (≥0.4 mg), the Public Health Service has inferred that folate alone at levels of 400 mcg (0.4 mg) per day may reduce the risk of neural tube defects. The protective effect found in studies of lower dose folate measured by the reduction in neural tube defect incidence, ranges from none to substantial; a reasonable estimate of the expected reduction in the United States is 50 percent. It is expected that consumption of adequate folate will avert some, but not all, neural tube defects. The underlying causes of neural tube defects are not known. Thus, it is not known what proportion of neural tube defects will be averted by adequate folate consumption. From the available evidence, the Public Health Service estimates that there is the potential for averting 50 percent of cases that now occur (i.e., about 1,250 cases annually). However, until further research is done, no firm estimate of this proportion will be available.

(c) *Requirements*. The label or labeling of food may contain a folate/neural tube defect health claim provided that:

(1) *General requirements*. The health claim for a food meets all of the general requirements of § 101.14 for health claims, except that a food may qualify to bear the health claim if it meets the definition of the term ''good source.''

(2) *Specific requirements*—(i) *Nature of the claim*—(A) *Relationship*. A health claim that women who are capable of becoming pregnant and who consume adequate amounts of folate daily during their childbearing years may reduce their risk of having a pregnancy affected by spina bifida or other neural tube defects may be made on the label or labeling of food provided that:

(B) *Specifying the nutrient*. In specifying the nutrient, the claim shall use the terms ''folate,'' ''folic acid,'' ''folacin,'' ''folate, a B vitamin,'' ''folic acid, a B vitamin,'' or ''folacin, a B vitamin.''

(C) *Specifying the condition*. In specifying the health- related condition, the claim shall identify the birth defects as ''neural tube defects,'' ''birth defects spina bifida or anencephaly,'' ''birth defects of the brain or spinal cord anencephaly or spina bifida,'' ''spina bifida and anencephaly, birth defects of the brain or spinal cord,'' ''birth defects of the brain or spinal cord;'' or ''brain or spinal cord birth defects.''

(D) *Multifactorial nature*. The claim shall not imply that folate intake is

the only recognized risk factor for neural tube defects.

(E) *Reduction in risk.* The claim shall not attribute any specific degree of reduction in risk of neural tube defects from maintaining an adequate folate intake throughout the childbearing years. The claim shall state that some women may reduce their risk of a neural tube defect pregnancy by maintaining adequate intakes of folate during their childbearing years. Optional statements about population-based estimates of risk reduction may be made in accordance with paragraph (c)(3)(vi) of this section.

(F) *Safe upper limit of daily intake.* Claims on foods that contain more than 100 percent of the Daily Value (DV) (400 mcg) when labeled for use by adults and children 4 or more years of age, or 800 mcg when labeled for use by pregnant or lactating women) shall identify the safe upper limit of daily intake with respect to the DV. The safe upper limit of daily intake value of 1,000 mcg (1 mg) may be included in parentheses.

(G) The claim shall state that folate needs to be consumed as part of a healthful diet.

(ii) *Nature of the food*—(A) *Requirements.* The food shall meet or exceed the requirements for a ''good source'' of folate as defined in § 101.54;

(B) *Dietary supplements.* Dietary supplements shall meet the United States Pharmacopeia (USP) standards for disintegration and dissolution, except that if there are no applicable USP standards, the folate in the dietary supplement shall be shown to be bioavailable under the conditions of use stated on the product label.

(iii) *Limitation.* The claim shall not be made on foods that contain more than 100 percent of the RDI for vitamin A as retinol or preformed vitamin A or vitamin D per serving or per unit.

(iv) *Nutrition labeling.* The nutrition label shall include information about the amount of folate in the food. This information shall be declared after the declaration for iron if only the levels of vitamin A, vitamin C, calcium, and iron are provided, or in accordance with § 101.9 (c)(8) and (c)(9) if other optional vitamins or minerals are declared.

(3) *Optional information*—(i) *Risk factors.* The claim may specifically identify risk factors for neural tube defects. Where such information is provided, it may consist of statements from § 101.79(b)(1) or (b)(2) (e.g., Women at increased risk include those with a personal history of a neural tube defect-affected pregnancy, those with a close relative (i.e., sibling, niece, nephew) with a neural tube defect; those with insulin-dependent diabetes mellitus; those with seizure disorders who are being treated with valproic acid or carbamazepine) or from other parts of this paragraph (c)(3)(i).

(ii) *Relationship between folate and neural tube defects.* The claim may include statements from paragraphs (a) and (b) of this section that summarize the relationship between folate and neural tube defects and the significance of the relationship except for information specifically prohibited from the claim.

(iii) *Personal history of a neural tube defect-affected pregnancy.* The claim may state that women with a history of a neural tube defect pregnancy should consult their physicians or health care providers before becoming pregnant. If such a statement is provided, the claim shall also state that all women should consult a health care provider when planning a pregnancy.

(iv) *Daily value.* The claim may identify 100 percent of the DV (100% DV; 400 mcg) for folate as the target intake goal.

(v) *Prevalence.* The claim may provide estimates, expressed on an annual basis, of the number of neural tube defect-affected births among live births in the United States. Current estimates are provided in § 101.79(b)(1), and are approximately 6 of 10,000 live births annually (i.e., about 2,500 cases among 4 million live births annually). Data provided in § 101.79(b)(1) shall be used, unless more current estimates from the U.S. Public Health Service are available, in which case the latter may be cited.

(vi) *Reduction in risk.* An estimate of the reduction in the number of neural tube defect-affected births that might occur in the United States if all women consumed adequate folate throughout

their childbearing years may be included in the claim. Information contained in paragraph (b)(3) of this section may be used. If such an estimate (i.e., 50 percent) is provided, the estimate shall be accompanied by additional information that states that the estimate is population-based and that it does not reflect risk reduction that may be experienced by individual women.

(vii) *Diets adequate in folate.* The claim may identify diets adequate in folate by using phrases such as ''Sources of folate include fruits, vegetables, whole grain products, fortified cereals, and dietary supplements.'' or ''Adequate amounts of folate can be obtained from diets rich in fruits, dark green leafy vegetables, legumes, whole grain products, fortified cereals, or dietary supplements.'' or ''Adequate amounts of folate can be obtained from diets rich in fruits, including citrus fruits and juices, vegetables, including dark green leafy vegetables, legumes, whole grain products, including breads, rice, and pasta, fortified cereals, or a dietary supplement.''

(d) *Model health claims.* The following are examples of model health claims that may be used in food labeling to describe the relationship between folate and neural tube defects:

(1) *Examples 1 and 2.* Model health claims appropriate for foods containing 100 percent or less of the DV for folate per serving or per unit (general population). The examples contain only the required elements:

(i) Healthful diets with adequate folate may reduce a woman's risk of having a child with a brain or spinal cord birth defect.

(ii) Adequate folate in healthful diets may reduce a woman's risk of having a child with a brain or spinal cord birth defect.

(2) *Example 3.* Model health claim appropriate for foods containing 100 percent or less of the DV for folate per serving or per unit. The example contains all required elements plus optional information: Women who consume healthful diets with adequate folate throughout their childbearing years may reduce their risk of having a child with a birth defect of the brain or spinal cord. Sources of folate include fruits, vegetables, whole grain products, fortified cereals, and dietary supplements.

(3) *Example 4.* Model health claim appropriate for foods intended for use by the general population and containing more than 100 percent of the DV of folate per serving or per unit: Women who consume healthful diets with adequate folate may reduce their risk of having a child with birth defects of the brain or spinal cord. Folate intake should not exceed 250% of the DV (1,000 mcg).

[61 FR 8779, Mar. 5, 1996; 61 FR 48529, Sept. 13, 1996, as amended at 65 FR 58918, Oct. 3, 2000]

§ 101.80 Health claims: dietary noncariogenic carbohydrate sweeteners and dental caries.

(a) *Relationship between dietary carbohydrates and dental caries.* (1) Dental caries, or tooth decay, is a disease caused by many factors. Both environmental and genetic factors can affect the development of dental caries. Risk factors include tooth enamel crystal structure and mineral content, plaque quantity and quality, saliva quantity and quality, individual immune response, types and physical characteristics of foods consumed, eating behaviors, presence of acid producing oral bacteria, and cultural influences.

(2) The relationship between consumption of fermentable carbohydrates, i.e., dietary sugars and starches, and tooth decay is well established. Sucrose, also known as sugar, is one of the most, but not the only, cariogenic sugars in the diet. Bacteria found in the mouth are able to metabolize most dietary carbohydrates, producing acid and forming dental plaque. The more frequent and longer the exposure of teeth to dietary sugars and starches, the greater the risk for tooth decay.

(3) Dental caries continues to affect a large proportion of Americans. Although there has been a decline in the prevalence of dental caries among children in the United States, the disease remains widespread throughout the population, imposing a substantial burden on Americans. Recent Federal government dietary guidelines recommend that Americans choose diets that are moderate in sugars and avoid excessive

snacking. Frequent between-meal snacks that are high in sugars and starches may be more harmful to teeth than eating such foods at meals and then brushing.

(4) Noncariogenic carbohydrate sweeteners, such as sugar alcohols, can be used to replace dietary sugars, such as sucrose and corn sweeteners, in foods such as chewing gums and certain confectioneries. Noncariogenic carbohydrate sweeteners are significantly less cariogenic than dietary sugars and other fermentable carbohydrates.

(b) *Significance of the relationship between noncariogenic carbohydrate sweeteners and dental caries.* Noncariogenic carbohydrate sweeteners do not promote dental caries. The noncariogenic carbohydrate sweeteners listed in paragraph (c)(2)(ii) of this section are slowly metabolized by bacteria to form some acid. The rate and amount of acid production is significantly less than that from sucrose and other fermentable carbohydrates and does not cause the loss of important minerals from tooth enamel.

(c) *Requirements.* (1) All requirements set forth in § 101.14 shall be met, except that noncariogenic carbohydrate sweetener-containing foods listed in paragraph (c)(2)(ii) of this section are exempt from § 101.14(e)(6).

(2) *Specific requirements*—(i) *Nature of the claim.* A health claim relating noncariogenic carbohydrate sweeteners, compared to other carbohydrates, and the nonpromotion of dental caries may be made on the label or labeling of a food described in paragraph (c)(2)(iii) of this section, provided that:

(A) The claim shall state that frequent between-meal consumption of foods high in sugars and starches can promote tooth decay.

(B) The claim shall state that the noncariogenic carbohydrate sweetener present in the food ''does not promote,'' ''may reduce the risk of,'' ''useful [or is useful] in not promoting,'' or ''expressly [or is expressly] for not promoting'' dental caries.

(C) In specifying the nutrient, the claim shall state ''sugar alcohol,'' ''sugar alcohols,'' or the name or names of the substances listed in paragraph (c)(2)(ii) of this section, e.g., ''sorbitol.'' D-tagatose may be identified as ''tagatose.''

(D) In specifying the disease, the claim uses the following terms: ''dental caries'' or ''tooth decay.''

(E) The claim shall not attribute any degree of the reduction in risk of dental caries to the use of the noncariogenic carbohydrate sweetener-containing food.

(F) The claim shall not imply that consuming noncariogenic carbohydrate sweetener-containing foods is the only recognized means of achieving a reduced risk of dental caries.

(G) Packages with less than 15 square inches of surface area available for labeling are exempt from paragraphs (A) and (C) of this section.

(H) When the substance that is the subject of the claim is a noncariogenic sugar, the claim shall identify the substance as a sugar that, unlike other sugars, does not promote the development of dental caries.

(ii) *Nature of the substance.* Eligible noncariogenic carbohydrate sweeteners are:

(A) The sugar alcohols xylitol, sorbitol, mannitol, maltitol, isomalt, lactitol, hydrogenated starch hydrolysates, hydrogenated glucose syrups, and erythritol, or a combination of these.

(B) The sugars D-tagatose and isomaltulose.

(C) Sucralose.

(iii) *Nature of the food.* (A) The food shall meet the requirement in § 101.60(c)(1)(i) with respect to sugars content, except that the food may contain D-tagatose or isomaltulose.

(B) A food whose labeling includes a health claim under this section shall contain one or more of the noncariogenic carbohydrate sweeteners listed in paragraph (c)(2)(ii) of this section.

(C) When carbohydrates other than those listed in paragraph (c)(2)(ii) of this section are present in the food, the food shall not lower plaque pH below 5.7 by bacterial fermentation either during consumption or up to 30 minutes after consumption, as measured by the indwelling plaque pH test found in ''Identification of Low Caries Risk Dietary Components,'' dated 1983, by T.

N. Imfeld, in Volume 11, *Monographs in Oral Science*, 1983. The Director of the Office of the Federal Register has approved the incorporation by reference of this material in accordance with 5 U.S.C. 552(a) and 1 CFR part 51. You may obtain copies from Karger AG Publishing Co., P.O. Box, Ch–4009 Basel, Switzerland, or you may examine a copy at the Food and Drug Administration's Main Library, 10903 New Hampshire Ave., Bldg. 2, Third Floor, Silver Spring, MD 20993, 301–796–2039, or at the National Archives and Records Administration (NARA). For information on the availability of this material at NARA, call 202–741–6030, or go to: *http://www.archives.gov/federal_register/code_of_federal_regulations/ibr_locations.html.*

(d) *Optional information.* (1) The claim may include information from paragraphs (a) and (b) of this section, which describe the relationship between diets containing noncariogenic carbohydrate sweeteners and dental caries.

(2) The claim may indicate that development of dental caries depends on many factors and may identify one or more of the following risk factors for dental caries: Frequent consumption of fermentable carbohydrates, such as dietary sugars and starches; presence of oral bacteria capable of fermenting carbohydrates; length of time fermentable carbohydrates are in contact with the teeth; lack of exposure to fluoride; individual susceptibility; socioeconomic and cultural factors; and characteristics of tooth enamel, saliva, and plaque.

(3) The claim may indicate that oral hygiene and proper dental care may help to reduce the risk of dental disease.

(4) The claim may indicate that a substance listed in paragraph (c)(2)(ii) of this section serves as a sweetener.

(e) *Model health claim.* The following model health claims may be used in food labeling to describe the relationship between noncariogenic carbohydrate sweetener-containing foods and dental caries.

(1) Examples of the full claim:

(i) Frequent eating of foods high in sugars and starches as between-meal snacks can promote tooth decay. The sugar alcohol [name, optional] used to sweeten this food may reduce the risk of dental caries.

(ii) Frequent between-meal consumption of foods high in sugars and starches promotes tooth decay. The sugar alcohols in [name of food] do not promote tooth decay.

(iii) Frequent eating of foods high in sugars and starches as between-meal snacks can promote tooth decay. [Name of sugar from paragraph (c)(2)(ii)(B) of this section], the sugar used to sweeten this food, unlike other sugars, may reduce the risk of dental caries.

(iv) Frequent between-meal consumption of foods high in sugars and starches promotes tooth decay. [Name of sugar from paragraph (c)(2)(ii)(B) of this section], the sugar in [name of food], unlike other sugars, does not promote tooth decay.

(v) Frequent eating of foods high in sugars and starches as between-meal snacks can promote tooth decay. Sucralose, the sweetening ingredient used to sweeten this food, unlike sugars, does not promote tooth decay.

(2) Example of the shortened claim for small packages:

(i) Does not promote tooth decay.

(ii) May reduce the risk of tooth decay.

(iii) [Name of sugar from paragraph (c)(2)(ii)(B) of this section] sugar does not promote tooth decay.

(iv) [Name of sugar from paragraph (c)(2)(ii)(B) of this section] sugar may reduce the risk of tooth decay.

[61 FR 43446, Aug. 23, 1996, as amended at 62 FR 63655, Dec. 2, 1997; 66 FR 66742, Dec. 27, 2001; 67 FR 71470, Dec. 2, 2002; 71 FR 15563, Mar. 29, 2006; 72 FR 52789, Sept. 17, 2007; 81 FR 5590, Feb. 3, 2016]

§ 101.81 Health claims: Soluble fiber from certain foods and risk of coronary heart disease (CHD).

(a) *Relationship between diets that are low in saturated fat and cholesterol and that include soluble fiber from certain foods and the risk of CHD.* (1) Cardiovascular disease means diseases of the heart and circulatory system. Coronary heart disease (CHD) is one of the

most common and serious forms of cardiovascular disease and refers to diseases of the heart muscle and supporting blood vessels. High blood total cholesterol and low density lipoprotein (LDL)-cholesterol levels are associated with increased risk of developing coronary heart disease. High CHD rates occur among people with high total cholesterol levels of 240 milligrams per deciliter (mg/dL) (6.21 (mmol/L)) or above and LDL-cholesterol levels of 160 mg/dL (4.13 mmol/L) or above. Borderline high risk total cholesterol levels range from 200 to 239 mg/dL (5.17 to 6.18 mmol/L) and 130 to 159 mg/dL (3.36 to 4.11 mmol/L) of LDL-cholesterol. The scientific evidence establishes that diets high in saturated fat and cholesterol are associated with increased levels of blood total- and LDL-cholesterol and, thus, with increased risk of CHD.

(2) Populations with a low incidence of CHD tend to have relatively low blood total cholesterol and LDL-cholesterol levels. These populations also tend to have dietary patterns that are not only low in total fat, especially saturated fat and cholesterol, but are also relatively high in fiber-containing fruits, vegetables, and grain products, such as whole oat products.

(3) Scientific evidence demonstrates that diets low in saturated fat and cholesterol may reduce the risk of CHD. Other evidence demonstrates that the addition of soluble fiber from certain foods to a diet that is low in saturated fat and cholesterol may also help to reduce the risk of CHD.

(b) *Significance of the relationship between diets that are low in saturated fat and cholesterol and that include soluble fiber from certain foods and the risk of CHD.* (1) CHD is a major public health concern in the United States. It accounts for more deaths than any other disease or group of diseases. Early management of risk factors for CHD is a major public health goal that can assist in reducing risk of CHD. High blood total and LDL-cholesterol are major modifiable risk factors in the development of CHD.

(2) Intakes of saturated fat exceed recommended levels in the diets of many people in the United States. One of the major public health recommendations relative to CHD risk is to consume less than 10 percent of calories from saturated fat and an average of 30 percent or less of total calories from all fat. Recommended daily cholesterol intakes are 300 milligrams (mg) or less per day. Scientific evidence demonstrates that diets low in saturated fat and cholesterol are associated with lower blood total- and LDL-cholesterol levels. Soluble fiber from certain foods, when included in a low saturated fat and cholesterol diet, also helps to lower blood total- and LDL-cholesterol levels.

(c) *Requirements.* (1) All requirements set forth in § 101.14 shall be met. The label and labeling of foods containing psyllium husk shall be consistent with the provisions of § 101.17(f).

(2) *Specific requirements*—(i) *Nature of the claim.* A health claim associating diets that are low in saturated fat and cholesterol and that include soluble fiber from certain foods with reduced risk of heart disease may be made on the label or labeling of a food described in paragraph (c)(2)(iii) of this section, provided that:

(A) The claim states that diets that are low in saturated fat and cholesterol and that include soluble fiber from certain foods ''may'' or ''might'' reduce the risk of heart disease.

(B) In specifying the disease, the claim uses the following terms: ''heart disease'' or ''coronary heart disease'';

(C) In specifying the substance, the claim uses the term ''soluble fiber'' qualified by the name of the eligible source of soluble fiber (provided in paragraph (c)(2)(ii)) of this section. Additionally, the claim may use the name of the food product that contains the eligible source of soluble fiber;

(D) In specifying the fat component, the claim uses the terms ''saturated fat'' and ''cholesterol'';

(E) The claim does not attribute any degree of risk reduction for CHD to diets that are low in saturated fat and cholesterol and that include soluble fiber from the eligible food sources from paragraph (c)(2)(ii) of this section; and

(F) The claim does not imply that consumption of diets that are low in saturated fat and cholesterol and that include soluble fiber from the eligible food sources from paragraph (c)(2)(ii) of

this section is the only recognized means of achieving a reduced risk of CHD.

(G) The claim specifies the daily dietary intake of the soluble fiber source that is necessary to reduce the risk of coronary heart disease and the contribution one serving of the product makes to the specified daily dietary intake level. Daily dietary intake levels of soluble fiber sources listed in paragraph (c)(2)(ii) of this section that have been associated with reduced risk coronary heart disease are:

(*1*) 3 g or more per day of β-glucan soluble fiber from either whole oats or barley, or a combination of whole oats and barley.

(*2*) 7 g or more per day of soluble fiber from psyllium seed husk.

(ii) *Nature of the substance—Eligible sources of soluble fiber.* (A) Beta (β) glucan soluble fiber from the whole oat and barley sources listed below. β-glucan soluble fiber will be determined by method No. 992.28 from the ''Official Methods of Analysis of the AOAC INTERNATIONAL,'' 16th ed. (1995), which is incorporated by reference in accordance with 5 U.S.C. 552(a) and 1 CFR part 51. Copies may be obtained from the AOAC INTERNATIONAL, 481 North Frederick Ave., suite 500, Gaithersburg, MD 20877, or may be examined at the Food and Drug Administration's Main Library, 10903 New Hampshire Ave., Bldg. 2, Third Floor, Silver Spring, MD 20993, 301–796–2039, or at the National Archives and Records Administration (NARA). For information on the availability of this material at NARA, call 202–741–6030, or go to: *http://www.archives.gov/federal_register/code_of_federal_regulations/ibr_locations.html*;

(*1*) *Oat bran.* Oat bran is produced by grinding clean oat groats or rolled oats and separating the resulting oat flour by suitable means into fractions such that the oat bran fraction is not more than 50 percent of the original starting material and provides at least 5.5 percent (dry weight basis (dwb)) β-glucan soluble fiber and a total dietary fiber content of 16 percent (dwb), and such that at least one-third of the total dietary fiber is soluble fiber;

(*2*) *Rolled oats.* Rolled oats, also known as oatmeal, produced from 100 percent dehulled, clean oat groats by steaming, cutting, rolling, and flaking, and provides at least 4 percent (dwb) of β-glucan soluble fiber and a total dietary fiber content of at least 10 percent.

(*3*) *Whole oat flour.* Whole oat flour is produced from 100 percent dehulled, clean oat groats by steaming and grinding, such that there is no significant loss of oat bran in the final product, and provides at least 4 percent (dwb) of β-glucan soluble fiber and a total dietary fiber content of at least 10 percent (dwb).

(*4*) *Oatrim.* The soluble fraction of alpha-amylase hydrolyzed oat bran or whole oat flour, also known as oatrim. Oatrim is produced from either oat bran as defined in paragraph (c)(2)(ii)(A)(*1*) of this section or whole oat flour as defined in paragraph (c)(2)(ii)(A)(*3*) of this section by solubilization of the starch in the starting material with an alpha-amylase hydrolysis process, and then removal by centrifugation of the insoluble components consisting of a high portion of protein, lipid, insoluble dietary fiber, and the majority of the flavor and color components of the starting material. Oatrim shall have a beta-glucan soluble fiber content up to 10 percent (dwb) and not less than that of the starting material (dwb).

(*5*) *Whole grain barley and dry milled barley.* Dehulled and hull-less whole grain barley with a β-glucan soluble fiber content of at least 4 percent (dwb) and a total dietary fiber content of at least 10 percent (dwb). Dry milled barley grain products include barley bran, barley flakes, barley grits, pearl barley, barley flour, barley meal, and sieved barley meal that are produced from clean, sound dehulled or hull-less barley grain using standard dry milling techniques, which may include steaming or tempering, and that contain at least 4 percent (dwb) of β-glucan soluble fiber and at least 8 percent (dwb) of total dietary fiber, except barley bran and sieved barley meal for which the minimum β-glucan soluble fiber content is 5.5 percent (dwb) and minimum total dietary fiber content is 15 percent (dwb). Dehulled barley, hull-less barley, barley bran, barley flakes, barley grits, pearl barley, and barley flour are

as defined in the Barley Glossary (AACC Method 55–99), published in Approved Methods of the American Association of Cereal Chemists, 10th ed. (2000), pp. 1 and 2, which is incorporated by reference in accordance with 5 U.S.C. 552(a) and 1 CFR part 51. Copies may be obtained from the American Association of Cereal Chemists, Inc., 3340 Pilot Knob Rd., St. Paul, Minnesota, 55121, or may be examined at the Food and Drug Administration's Main Library, 10903 New Hampshire Ave., Bldg. 2, Third Floor, Silver Spring, MD 20993, 301–796–2039, or at the National Archives and Records Administration (NARA). For information on the availability of this material at NARA, call 202–741–6030, or go to: *http://www.archives.gov/federal_register/code_of_federal_regulations/ibr_locations.html*. Barley meal is unsifted, ground barley grain not subjected to any processing to separate the bran, germ, and endosperm. Sieved barley meal is an endosperm cell wall-enriched fraction of ground barley separated from meal by sieving or by air classification.

(*6*) *Barley betafiber*. Barley betafiber is the ethanol precipitated soluble fraction of cellulase and alpha-amylase hydrolyzed whole grain barley. Barley betafiber is produced by hydrolysis of whole grain barley flour, as defined in paragraph (c)(2)(ii)(A)(*5*) of this section, with a cellulase and alpha-amylase enzyme preparation, to produce a clear aqueous extract that contains mainly partially hydrolyzed beta-glucan and substantially hydrolyzed starch. The soluble, partially hydrolyzed beta-glucan is separated from the insoluble material by centrifugation, and after removal of the insoluble material, the partially hydrolyzed beta-glucan soluble fiber is separated from the other soluble compounds by precipitation with ethanol. The product is then dried, milled and sifted. Barley betafiber shall have a beta-glucan soluble fiber content of at least 70 percent on a dry weight basis.

(B)(*1*) Psyllium husk from the dried seed coat (epidermis) of the seed of *Plantago* (*P.*) ovata, known as blond psyllium or Indian psyllium, *P. indica*, or *P. psyllium*. To qualify for this claim, psyllium seed husk, also known as psyllium husk, shall have a purity of no less than 95 percent, such that it contains 3 percent or less protein, 4.5 percent or less of light extraneous matter, and 0.5 percent or less of heavy extraneous matter, but in no case may the combined extraneous matter exceed 4.9 percent, as determined by U.S. Pharmacopeia (USP) methods described in USP's ''The National Formulary,'' USP 23, NF 18, p. 1341, (1995), which is incorporated by reference in accordance with 5 U.S.C. 552(a) and 1 CFR part 51. Copies may be obtained from the U.S. Pharmacopeial Convention, Inc., 12601 Twinbrook Pkwy., Rockville, MD 20852, or may be examined at the Food and Drug Administration's Main Library, 10903 New Hampshire Ave., Bldg. 2, Third Floor, Silver Spring, MD 20993, 301–796–2039, or at the National Archives and Records Administration (NARA). For information on the availability of this material at NARA, call 202–741–6030, or go to: *http://www.archives.gov/federal_register/code_of_federal_regulations/ibr_locations.html*;

(*2*) FDA will determine the amount of soluble fiber that is provided by psyllium husk by using a modification of the Association of Official Analytical Chemists' International (AOAC's) method for soluble dietary fiber (991.43) described by Lee et al., ''Determination of Soluble and Insoluble Dietary Fiber in Psyllium-containing Cereal Products,'' *Journal of the AOAC International*, 78 (No. 3):724–729, 1995, which is incorporated by reference in accordance with 5 U.S.C. 552(a) and 1 CFR part 51. Copies may be obtained from the AOAC INTERNATIONAL, 481 North Frederick Ave., suite 500, Gaithersburg, MD 20877, or may be examined at the Food and Drug Administration's Main Library, 10903 New Hampshire Ave., Bldg. 2, Third Floor, Silver Spring, MD 20993, 301–796–2039 or at the National Archives and Records Administration (NARA). For information on the availability of this material at NARA, call 202–741–6030, or go to: *http://www.archives.gov/federal_register/code_of_federal_regulations/ibr_locations.html*;

(iii) *Nature of the food eligible to bear the claim*. (A) The food product shall include:

(*1*) One or more of the whole oat or barley foods from paragraphs (c)(2)(ii)(A)(*1*), (*2*), (*3*), and (*5*) of this section, and the whole oat or barley foods shall contain at least 0.75 gram (g) of soluble fiber per reference amount customarily consumed of the food product; or

(*2*) The food containing the oatrim from paragraph (c)(2)(ii)(A)(*4*) of this section or the barley betafiber from paragraph (c)(2)(ii)(A)(*6*) of this section shall contain at least 0.75 g of beta-glucan soluble fiber per reference amount customarily consumed of the food product; or

(*3*) Psyllium husk that complies with paragraph (c)(2)(ii)(B) of this section, and the psyllium food shall contain at least 1.7 g of soluble fiber per reference amount customarily consumed of the food product;

(B) The amount of soluble fiber shall be declared in the nutrition label, consistent with § 101.9(c)(6)(i)(A).

(C) The food shall meet the nutrient content requirement in § 101.62 for a ''low saturated fat'' and ''low cholesterol'' food; and

(D) The food shall meet the nutrient content requirement in § 101.62(b)(2) for a ''low fat'' food, unless the food exceeds this requirement due to fat content derived from whole oat sources listed in paragraph (c)(2)(ii)(A) of this section.

(d) *Optional information.* (1) The claim may state that the development of heart disease depends on many factors and may identify one or more of the following risk factors for heart disease about which there is general scientific agreement: A family history of CHD; elevated blood total and LDL-cholesterol; excess body weight; high blood pressure; cigarette smoking; diabetes; and physical inactivity. The claim may also provide additional information about the benefits of exercise and management of body weight to help lower the risk of heart disease;

(2) The claim may state that the relationship between intake of diets that are low in saturated fat and cholesterol and that include soluble fiber from the eligible food sources from paragraph (c)(2)(ii) of this section and reduced risk of heart disease is through the intermediate link of ''blood cholesterol'' or ''blood total- and LDL-cholesterol;''

(3) The claim may include information from paragraphs (a) and (b) of this section, which summarize the relationship between diets that are low in saturated fat and cholesterol and that include soluble fiber from certain foods and coronary heart disease and the significance of the relationship;

(4) The claim may specify the name of the eligible soluble fiber;

(5) The claim may state that a diet low in saturated fat and cholesterol that includes soluble fiber from whole oats or barley is consistent with ''Nutrition and Your Health: Dietary Guidelines for Americans,'' U.S. Department of Agriculture (USDA) and Department of Health and Human Services (DHHS), Government Printing Office (GPO);

(6) The claim may state that individuals with elevated blood total- and LDL-cholesterol should consult their physicians for medical advice and treatment. If the claim defines high or normal blood total- and LDL-cholesterol levels, then the claim shall state that individuals with high blood cholesterol should consult their physicians for medical advice and treatment;

(7) The claim may include information on the number of people in the United States who have heart disease. The sources of this information shall be identified, and it shall be current information from the National Center for Health Statistics, the National Institutes of Health, or ''Nutrition and Your Health: Dietary Guidelines for Americans,'' USDA and DHHS, GPO.

(e) *Model health claim.* The following model health claims may be used in food labeling to describe the relationship between diets that are low in saturated fat and cholesterol and that include soluble fiber from certain foods and reduced risk of heart disease:

(1) Soluble fiber from foods such as [name of soluble fiber source from paragraph (c)(2)(ii) of this section and, if desired, the name of food product], as part of a diet low in saturated fat and cholesterol, may reduce the risk of heart disease. A serving of [name of food] supplies _____ grams of the [grams of soluble fiber specified in paragraph (c)(2)(i)(G) of this section]

soluble fiber from [name of the soluble fiber source from paragraph (c)(2)(ii) of this section] necessary per day to have this effect.

(2) Diets low in saturated fat and cholesterol that include [_____ grams of soluble fiber specified in paragraph (c)(2)(i)(G) of this section] of soluble fiber per day from [name of soluble fiber source from paragraph (c)(2)(ii) of this section and, if desired, the name of the food product] may reduce the risk of heart disease. One serving of [name of food] provides _____ grams of this soluble fiber.

[62 FR 3600, Jan. 23, 1997, as amended at 62 FR 15344, Mar. 31, 1997; 63 FR 8119, Feb. 18, 1998; 66 FR 66742, Dec. 27, 2001; 67 FR 61782, Oct. 2, 2002; 68 FR 15355, Mar. 31, 2003; 70 FR 40880, July 15, 2005; 70 FR 76162, Dec. 23, 2005; 73 FR 9947, Feb. 25, 2008; 73 FR 23953, May 1, 2008; 81 FR 5590, Feb. 3, 2016]

§ 101.82 Health claims: Soy protein and risk of coronary heart disease (CHD).

(a) *Relationship between diets that are low in saturated fat and cholesterol and that include soy protein and the risk of CHD.* (1) Cardiovascular disease means diseases of the heart and circulatory system. CHD is one of the most common and serious forms of cardiovascular disease and refers to diseases of the heart muscle and supporting blood vessels. High blood total cholesterol and low density lipoprotein (LDL)-cholesterol levels are associated with increased risk of developing CHD. High CHD rates occur among people with high total cholesterol levels of 240 milligrams per deciliter (mg/dL) (6.21 millimole per liter (mmol/L)) or above and LDL-cholesterol levels of 160 mg/dL (4.13 mmol/L) or above. Borderline high risk total cholesterol levels range from 200 to 239 mg/dL (5.17 to 6.18 mmol/L) and 130 to 159 mg/dL (3.36 to 4.11 mmol/L) of LDL-cholesterol. The scientific evidence establishes that diets high in saturated fat and cholesterol are associated with increased levels of blood total and LDL-cholesterol and, thus, with increased risk of CHD.

(2) Populations with a low incidence of CHD tend to have relatively low blood total cholesterol and LDL-cholesterol levels. These populations also tend to have dietary patterns that are not only low in total fat, especially saturated fat and cholesterol, but are also relatively high in plant foods that contain dietary fiber and other components.

(3) Scientific evidence demonstrates that diets low in saturated fat and cholesterol may reduce the risk of CHD. Other evidence demonstrates that the addition of soy protein to a diet that is low in saturated fat and cholesterol may also help to reduce the risk of CHD.

(b) *Significance of the relationship between diets that are low in saturated fat and cholesterol and that include soy protein and the risk of CHD.* (1) CHD is a major public health concern in the United States. It accounts for more deaths than any other disease or group of diseases. Early management of risk factors for CHD is a major public health goal that can assist in reducing risk of CHD. High blood total and LDL-cholesterol are major modifiable risk factors in the development of CHD.

(2) Intakes of saturated fat exceed recommended levels in the diets of many people in the United States. One of the major public health recommendations relative to CHD risk is to consume less than 10 percent of calories from saturated fat and an average of 30 percent or less of total calories from all fat. Recommended daily cholesterol intakes are 300 mg or less per day. Scientific evidence demonstrates that diets low in saturated fat and cholesterol are associated with lower blood total and LDL-cholesterol levels. Soy protein, when included in a low saturated fat and cholesterol diet, also helps to lower blood total and LDL-cholesterol levels.

(c) *Requirements.* (1) All requirements set forth in § 101.14 shall be met.

(2) *Specific requirements*—(i) *Nature of the claim.* A health claim associating diets that are low in saturated fat and cholesterol and that include soy protein with reduced risk of heart disease may be made on the label or labeling of a food described in paragraph (c)(2)(iii) of this section, provided that:

(A) The claim states that diets that are low in saturated fat and cholesterol and that include soy protein ''may'' or ''might'' reduce the risk of heart disease;

(B) In specifying the disease, the claim uses the following terms: ''heart disease'' or ''coronary heart disease'';

(C) In specifying the substance, the claim uses the term ''soy protein'';

(D) In specifying the fat component, the claim uses the terms ''saturated fat'' and ''cholesterol'';

(E) The claim does not attribute any degree of risk reduction for CHD to diets that are low in saturated fat and cholesterol and that include soy protein;

(F) The claim does not imply that consumption of diets that are low in saturated fat and cholesterol and that include soy protein is the only recognized means of achieving a reduced risk of CHD; and

(G) The claim specifies the daily dietary intake of soy protein that is necessary to reduce the risk of coronary heart disease and the contribution one serving of the product makes to the specified daily dietary intake level. The daily dietary intake level of soy protein that has been associated with reduced risk of coronary heart disease is 25 grams (g) or more per day of soy protein.

(ii) *Nature of the substance.* (A) Soy protein from the legume seed Glycine max.

(B) FDA will assess qualifying levels of soy protein in the following fashion: FDA will measure total protein content by the appropriate method of analysis given in the ''Official Methods of Analysis of the AOAC International,'' as described at §101.9(c)(7). For products that contain no sources of protein other than soy, FDA will consider the amount of soy protein as equivalent to the total protein content. For products that contain a source or sources of protein in addition to soy, FDA will, using the measurement of total protein content, calculate the soy protein content based on the ratio of soy protein ingredients to total protein ingredients in the product. FDA will base its calculation on information identified and supplied by manufacturers, such as nutrient data bases or analyses, recipes or formulations, purchase orders for ingredients, or any other information that reasonably substantiates the ratio of soy protein to total protein. Manufacturers must maintain records sufficient to substantiate the claim for as long as the products are marketed and provide these records, on written request, to appropriate regulatory officials.

(iii) *Nature of the food eligible to bear the claim.* (A) The food product shall contain at least 6.25 g of soy protein per reference amount customarily consumed of the food product;

(B) The food shall meet the nutrient content requirements in §101.62 for a ''low saturated fat'' and ''low cholesterol'' food; and

(C) The food shall meet the nutrient content requirement in §101.62 for a ''low fat'' food, unless it consists of or is derived from whole soybeans and contains no fat in addition to the fat inherently present in the whole soybeans it contains or from which it is derived.

(d) *Optional information.* (1) The claim may state that the development of heart disease depends on many factors and may identify one or more of the following risk factors for heart disease about which there is general scientific agreement: A family history of CHD; elevated blood total and LDL-cholesterol; excess body weight; high blood pressure; cigarette smoking; diabetes; and physical inactivity. The claim may also provide additional information about the benefits of exercise and management of body weight to help lower the risk of heart disease;

(2) The claim may state that the relationship between intake of diets that are low in saturated fat and cholesterol and that include soy protein and reduced risk of heart disease is through the intermediate link of ''blood cholesterol'' or ''blood total and LDL-cholesterol'';

(3) The claim may include information from paragraphs (a) and (b) of this section, which summarize the relationship between diets that are low in saturated fat and cholesterol and that include soy protein and CHD and the significance of the relationship;

(4) The claim may state that a diet low in saturated fat and cholesterol that includes soy protein is consistent with ''Nutrition and Your Health: Dietary Guidelines for Americans,'' U.S. Department of Agriculture (USDA) and Department of Health and Human

Services (DHHS), Government Printing Office (GPO);

(5) The claim may state that individuals with elevated blood total and LDL-cholesterol should consult their physicians for medical advice and treatment. If the claim defines high or normal blood total and LDL-cholesterol levels, then the claim shall state that individuals with high blood cholesterol should consult their physicians for medical advice and treatment;

(6) The claim may include information on the number of people in the United States who have heart disease. The sources of this information shall be identified, and it shall be current information from the National Center for Health Statistics, the National Institutes of Health, or ''Nutrition and Your Health: Dietary Guidelines for Americans,'' USDA and DHHS, GPO;

(e) *Model health claim.* The following model health claims may be used in food labeling to describe the relationship between diets that are low in saturated fat and cholesterol and that include soy protein and reduced risk of heart disease:

(1) 25 grams of soy protein a day, as part of a diet low in saturated fat and cholesterol, may reduce the risk of heart disease. A serving of [name of food] supplies ____ grams of soy protein.

(2) Diets low in saturated fat and cholesterol that include 25 grams of soy protein a day may reduce the risk of heart disease. One serving of [name of food] provides ____ grams of soy protein.

[64 FR 57732, Oct. 26, 1999]

EFFECTIVE DATE NOTE: At 64 FR 57732, Oct. 26, 1999, § 101.82 was added. Paragraph (c)(2)(ii)(B) of this section contains information collection and recordkeeping requirements and will not become effective until approval has been given by the Office of Management and Budget.

§ 101.83 Health claims: plant sterol/stanol esters and risk of coronary heart disease (CHD).

(a) *Relationship between diets that include plant sterol/stanol esters and the risk of CHD.* (1) Cardiovascular disease means diseases of the heart and circulatory system. Coronary heart disease (CHD) is one of the most common and serious forms of cardiovascular disease and refers to diseases of the heart muscle and supporting blood vessels. High blood total cholesterol and low density lipoprotein (LDL) cholesterol levels are associated with increased risk of developing coronary heart disease. High CHD rates occur among people with high total cholesterol levels of 240 milligrams per deciliter (mg/dL) (6.21 millimole per liter (mmol/l)) or above and LDL cholesterol levels of 160 mg/dL (4.13 mmol/l) or above. Borderline high risk blood cholesterol levels range from 200 to 239 mg/dL (5.17 to 6.18 mmol/l) for total cholesterol, and 130 to 159 mg/dL (3.36 to 4.11 mmol/l) of LDL cholesterol.

(2) Populations with a low incidence of CHD tend to have relatively low blood total cholesterol and LDL cholesterol levels. These populations also tend to have dietary patterns that are not only low in total fat, especially saturated fat and cholesterol, but are also relatively high in plant foods that contain dietary fiber and other components.

(3) Scientific evidence demonstrates that diets that include plant sterol/stanol esters may reduce the risk of CHD.

(b) *Significance of the relationship between diets that include plant sterol/stanol esters and the risk of CHD.* (1) CHD is a major public health concern in the United States. It accounts for more deaths than any other disease or group of diseases. Early management of risk factors for CHD is a major public health goal that can assist in reducing risk of CHD. High blood total and LDL cholesterol are major modifiable risk factors in the development of CHD.

(2) The scientific evidence establishes that including plant sterol/stanol esters in the diet helps to lower blood total and LDL cholesterol levels.

(c) *Requirements*—(1) *General.* All requirements set forth in § 101.14 shall be met, except § 101.14(a)(4) with respect to the disqualifying level for total fat per 50 grams (g) in dressings for salad and spreads and § 101.14(e)(6) with respect to dressings for salad.

(2) *Specific requirements*—(i) *Nature of the claim.* A health claim associating diets that include plant sterol/stanol

esters with reduced risk of heart disease may be made on the label or labeling of a food described in paragraph (c)(2)(iii) of this section, provided that:

(A) The claim states that plant sterol/stanol esters should be consumed as part of a diet low in saturated fat and cholesterol;

(B) The claim states that diets that include plant sterol/stanol esters ''may'' or ''might'' reduce the risk of heart disease;

(C) In specifying the disease, the claim uses the following terms: ''heart disease'' or ''coronary heart disease'';

(D) In specifying the substance, the claim uses the term ''plant sterol esters'' or ''plant stanol esters,'' except that if the sole source of the plant sterols or stanols is vegetable oil, the claim may use the term ''vegetable oil sterol esters'' or ''vegetable oil stanol esters'';

(E) The claim does not attribute any degree of risk reduction for CHD to diets that include plant sterol/stanol esters;

(F) The claim does not imply that consumption of diets that include plant sterol/stanol esters is the only recognized means of achieving a reduced risk of CHD; and

(G) The claim specifies the daily dietary intake of plant sterol or stanol esters that is necessary to reduce the risk of CHD and the contribution one serving of the product makes to the specified daily dietary intake level. Daily dietary intake levels of plant sterol and stanol esters that have been associated with reduced risk of are:

(*1*) 1.3 g or more per day of plant sterol esters.

(*2*) 3.4 g or more per day of plant stanol esters.

(H) The claim specifies that the daily dietary intake of plant sterol or stanol esters should be consumed in two servings eaten at different times of the day with other foods.

(ii) *Nature of the substance*—(A) *Plant sterol esters.* (*1*) Plant sterol esters prepared by esterifying a mixture of plant sterols from edible oils with food-grade fatty acids. The plant sterol mixture shall contain at least 80 percent beta-sitosterol, campesterol, and stigmasterol (combined weight).

(*2*) FDA will measure plant sterol esters by the method entitled ''Determination of the Sterol Content in Margarines, Halvarines, Dressings, Fat Blends and Sterol Fatty Acid Ester Concentrates by Capillary Gas Chromatography,'' developed by Unilever United States, Inc., dated February 1, 2000. The method, which is incorporated by reference in accordance with 5 U.S.C. 552(a) and 1 CFR part 51, may be obtained from the Center for Food Safety and Applied Nutrition, Office of Nutrition, Labeling and Dietary Supplements, Nutrition Programs Staff, 5001 Campus Dr., College Park, MD 20740, and may be examined at the Food and Drug Administration's Main Library, 10903 New Hampshire Ave., Bldg. 2, Third Floor, Silver Spring, MD 20993, 301–796–2039, or at the National Archives and Records Administration (NARA). For information on the availability of this material at NARA, call 202–741–6030, or go to: *http://www.archives.gov/federal_register/code_of_federal_regulations/ibr_locations.html.*

(B) *Plant stanol esters.* (*1*) Plant stanol esters prepared by esterifying a mixture of plant stanols derived from edible oils or byproducts of the kraft paper pulping process with food-grade fatty acids. The plant stanol mixture shall contain at least 80 percent sitostanol and campestanol (combined weight).

(*2*) FDA will measure plant stanol esters by the following methods developed by McNeil Consumer Heathcare dated February 15, 2000: ''Determination of Stanols and Sterols in Benecol Tub Spread''; ''Determination of Stanols and Sterols in Benecol Dressing''; ''Determination of Stanols and Sterols in Benecol Snack Bars''; or ''Determination of Stanols and Sterols in Benecol Softgels.'' These methods are incorporated by reference in accordance with 5 U.S.C. 552(a) and 1 CFR part 51. Copies may be obtained from the Center for Food Safety and Applied Nutrition, Office of Nutrition, Labeling and Dietary Supplements, Nutrition Programs Staff, 5001 Campus Dr., College Park, MD 20740, or may be examined at the Food and Drug Administration's Main Library, 10903 New Hampshire Ave., Bldg. 2, Third Floor, Silver

Spring, MD 20993, 301–796–2039, and at the National Archives and Records Administration (NARA). For information on the availability of this material at NARA, call 202–741–6030, or go to: *http://www.archives.gov/federal_register/code_of_federal_regulations/ibr_locations.html.*

(iii) *Nature of the food eligible to bear the claim.* (A) The food product shall contain:

(*1*) At least 0.65 g of plant sterol esters that comply with paragraph (c)(2)(ii)(A)(*1*) of this section per reference amount customarily consumed of the food products eligible to bear the health claim, specifically spreads and dressings for salad, or

(*2*) At least 1.7 g of plant stanol esters that comply with paragraph (c)(2)(ii)(B)(*1*) of this section per reference amount customarily consumed of the food products eligible to bear the health claim, specifically spreads, dressings for salad, snack bars, and dietary supplements in softgel form.

(B) The food shall meet the nutrient content requirements in §101.62 for a ''low saturated fat'' and ''low cholesterol'' food; and

(C) The food must meet the limit for total fat in §101.14(a)(4), except that spreads and dressings for salad are not required to meet the limit for total fat per 50 g if the label of the food bears a disclosure statement that complies with §101.13(h); and

(D) The food must meet the minimum nutrient contribution requirement in §101.14(e)(6) unless it is a dressing for salad.

(d) *Optional information.* (1) The claim may state that the development of heart disease depends on many factors and may identify one or more of the following risk factors for heart disease about which there is general scientific agreement: A family history of CHD; elevated blood total and LDL cholesterol; excess body weight; high blood pressure; cigarette smoking; diabetes; and physical inactivity. The claim may also provide additional information about the benefits of exercise and management of body weight to help lower the risk of heart disease.

(2) The claim may state that the relationship between intake of diets that include plant sterol/stanol esters and reduced risk of heart disease is through the intermediate link of ''blood cholesterol'' or ''blood total and LDL cholesterol.''

(3) The claim may include information from paragraphs (a) and (b) of this section, which summarize the relationship between diets that include plant sterol/stanol esters and the risk of CHD and the significance of the relationship.

(4) The claim may include information from the following paragraph on the relationship between saturated fat and cholesterol in the diet and the risk of CHD: The scientific evidence establishes that diets high in saturated fat and cholesterol are associated with increased levels of blood total and LDL cholesterol and, thus, with increased risk of CHD. Intakes of saturated fat exceed recommended levels in the diets of many people in the United States. One of the major public health recommendations relative to CHD risk is to consume less than 10 percent of calories from saturated fat and an average of 30 percent or less of total calories from all fat. Recommended daily cholesterol intakes are 300 mg or less per day. Scientific evidence demonstrates that diets low in saturated fat and cholesterol are associated with lower blood total and LDL cholesterol levels.

(5) The claim may state that diets that include plant sterol or stanol esters and are low in saturated fat and cholesterol are consistent with ''Nutrition and Your Health: Dietary Guidelines for Americans,'' U.S. Department of Agriculture (USDA) and Department of Health and Human Services (DHHS), Government Printing Office (GPO).

(6) The claim may state that individuals with elevated blood total and LDL cholesterol should consult their physicians for medical advice and treatment. If the claim defines high or normal blood total and LDL cholesterol levels, then the claim shall state that individuals with high blood cholesterol should consult their physicians for medical advice and treatment.

(7) The claim may include information on the number of people in the United States who have heart disease. The sources of this information shall

be identified, and it shall be current information from the National Center for Health Statistics, the National Institutes of Health, or ''Nutrition and Your Health: Dietary Guidelines for Americans,'' U.S. Department of Agriculture (USDA) and Department of Health and Human Services (DHHS), Government Printing Office (GPO).

(e) *Model health claim.* The following model health claims may be used in food labeling to describe the relationship between diets that include plant sterol or stanol esters and reduced risk of heart disease:

(1) *For plant sterol esters:* (i) Foods containing at least 0.65 g per serving of plant sterol esters, eaten twice a day with meals for a daily total intake of at least 1.3 g, as part of a diet low in saturated fat and cholesterol, may reduce the risk of heart disease. A serving of [name of the food] supplies _____grams of vegetable oil sterol esters.

(ii) Diets low in saturated fat and cholesterol that include two servings of foods that provide a daily total of at least 1.3 g of vegetable oil sterol esters in two meals may reduce the risk of heart disease. A serving of [name of the food] supplies _____grams of vegetable oil sterol esters.

(2) *For plant stanol esters:* (i) Foods containing at least 1.7 g per serving of plant stanol esters, eaten twice a day with meals for a total daily intake of at least 3.4 g, as part of a diet low in saturated fat and cholesterol, may reduce the risk of heart disease. A serving of [name of the food] supplies _____grams of plant stanol esters.

(ii) Diets low in saturated fat and cholesterol that include two servings of foods that provide a daily total of at least 3.4 g of vegetable oil stanol esters in two meals may reduce the risk of heart disease. A serving of [name of the food] supplies _____grams of vegetable oil stanol esters.

[65 FR 54717, Sept. 8, 2000; 65 FR 70466, Nov. 24, 2000, as amended at 66 FR 66742, Dec. 27, 2001; 68 FR 15355, Mar. 31, 2003; 70 FR 41958, July 21, 2005]

Subpart F—Specific Requirements for Descriptive Claims That Are Neither Nutrient Content Claims nor Health Claims

§ 101.91 Gluten-free labeling of food.

(a) *Definitions.* (1) The term ''gluten-containing grain'' means any one of the following grains or their crossbred hybrids (e.g., triticale, which is a cross between wheat and rye):

(i) Wheat, including any species belonging to the genus *Triticum;*

(ii) Rye, including any species belonging to the genus *Secale;* or

(iii) Barley, including any species belonging to the genus *Hordeum.*

(2) The term ''gluten'' means the proteins that naturally occur in a gluten-containing grain and that may cause adverse health effects in persons with celiac disease (e.g., prolamins and glutelins).

(3) The labeling claim ''gluten-free'' means:

(i) That the food bearing the claim in its labeling:

(A) Does not contain any one of the following:

(*1*) An ingredient that is a gluten-containing grain (e.g., spelt wheat);

(*2*) An ingredient that is derived from a gluten-containing grain and that has not been processed to remove gluten (e.g., wheat flour); or

(*3*) An ingredient that is derived from a gluten-containing grain and that has been processed to remove gluten (e.g., wheat starch), if the use of that ingredient results in the presence of 20 parts per million (ppm) or more gluten in the food (i.e., 20 milligrams (mg) or more gluten per kilogram (kg) of food); or

(B) Inherently does not contain gluten; and

(ii) Any unavoidable presence of gluten in the food bearing the claim in its labeling is below 20 ppm gluten (i.e., below 20 mg gluten per kg of food).

(b) *Requirements.* (1) A food that bears the claim ''gluten-free'' in its labeling and fails to meet the requirements of paragraph (a)(3) of this section and, if applicable, paragraphs (c)(2) through (4) of this section will be deemed misbranded.

(2) A food that bears the claim ''no gluten,'' ''free of gluten,'' or ''without gluten'' in its labeling and fails to

meet the requirements of paragraph (a)(3) of this section and, if applicable, paragraphs (c)(2) through (4) of this section will be deemed misbranded.

(3) A food that bears the term ''wheat'' in the ingredient list or in a separate ''Contains wheat'' statement in its labeling, as required by 21 U.S.C. 343(w)(1)(A), and also bears the claim ''gluten-free'' or a claim identified in paragraph (b)(2) of this section will be deemed misbranded unless the word ''wheat'' in the ingredient list or in the ''Contains wheat'' statement is followed immediately by an asterisk (or other symbol) that refers to another asterisk (or other symbol) in close proximity to the ingredient statement that immediately precedes the following: ''The wheat has been processed to allow this food to meet the Food and Drug Administration (FDA) requirements for gluten-free foods.''

(c) *Compliance.* (1) When compliance with paragraph (b) of this section is based on an analysis of the food, FDA will use a scientifically valid method that can reliably detect and quantify the presence of 20 ppm gluten in a variety of food matrices, including both raw and cooked or baked products.

(2) When a scientifically valid method pursuant to paragraph (c)(1) of this section is not available because the food is fermented or hydrolyzed, the manufacturer of such foods bearing the claim must make and keep records regarding the fermented or hydrolyzed food demonstrating adequate assurance that:

(i) The food is ''gluten-free'' in compliance with paragraph (a)(3) of this section before fermentation or hydrolysis;

(ii) The manufacturer has adequately evaluated their processing for any potential for gluten cross-contact; and

(iii) Where a potential for gluten cross-contact has been identified, the manufacturer has implemented measures to prevent the introduction of gluten into the food during the manufacturing process.

(3) When a scientifically valid method pursuant to paragraph (c)(1) of this section is not available because the food contains one or more ingredients that are fermented or hydrolyzed, the manufacturer of such foods bearing the claim must make and keep records demonstrating adequate assurance that the fermented or hydrolyzed ingredients are ''gluten-free'' as described in paragraph (c)(2) of this section.

(4) Records necessary to verify compliance with paragraphs (c)(2) and (3) of this section must be retained for at least 2 years after introduction or delivery for introduction of the food into interstate commerce and may be kept as original records, as true copies, or as electronic records. Manufacturers must provide those records to us for examination and copying during an inspection upon request.

(5) When a scientifically valid method pursuant to paragraph (c)(1) of this section is not available because the food is distilled, FDA will evaluate compliance with paragraph (b) of this section by verifying the absence of protein in the distilled component using scientifically valid analytical methods that can reliably detect the presence or absence of protein or protein fragments in the food.

(d) *Preemption.* A State or political subdivision of a State may not establish or continue into effect any law, rule, regulation, or other requirement that is different from the requirements in this section for the definition and use of the claim ''gluten-free,'' as well as the claims ''no gluten,'' ''free of gluten,'' or ''without gluten.''

[78 FR 47178, Aug. 5, 2013, as amended at 85 FR 49260, Aug. 13, 2020]

§ 101.93 Certain types of statements for dietary supplements.

(a)(1) No later than 30 days after the first marketing of a dietary supplement that bears one of the statements listed in section 403(r)(6) or the Federal Food, Drug, and Cosmetic Act, the manufacturer, packer, or distributor of the dietary supplement shall notify the Office of Nutritional Products, Labeling and Dietary Supplements (HFS–810), Center for Food Safety and Applied Nutrition, Food and Drug Administration, 5001 Campus Dr., College Park, MD 20740, that it has included such a statement on the label or in the labeling of its product. An original and two copies of this notification shall be submitted.

(2) The notification shall include the following:

(i) The name and address of the manufacturer, packer, or distributor of the dietary supplement that bears the statement;

(ii) The text of the statement that is being made;

(iii) The name of the dietary ingredient or supplement that is the subject of the statement, if not provided in the text of the statement; and

(iv) The name of the dietary supplement (including brand name), if not provided in response to paragraph (a)(2)(iii) on whose label, or in whose labeling, the statement appears.

(3) The notice shall be signed by a responsible individual or the person who can certify the accuracy of the information presented and contained in the notice. The individual shall certify that the information contained in the notice is complete and accurate, and that the notifying firm has substantiation that the statement is truthful and not misleading.

(b) *Disclaimer*. The requirements in this section apply to the label or labeling of dietary supplements where the dietary supplement bears a statement that is provided for by section 403(r)(6) of the Federal Food, Drug, and Cosmetic Act (the act), and the manufacturer, packer, or distributor wishes to take advantage of the exemption to section 201(g)(1)(C) of the act that is provided by compliance with section 403(r)(6) of the act.

(c) *Text for disclaimer*. (1) Where there is one statement, the disclaimer shall be placed in accordance with paragraph (d) of this section and shall state:

This statement has not been evaluated by the Food and Drug Administration. This product is not intended to diagnose, treat, cure, or prevent any disease.

(2) Where there is more than one such statement on the label or in the labeling, each statement shall bear the disclaimer in accordance with paragraph (c)(1) of this section, or a plural disclaimer may be placed in accordance with paragraph (d) of this section and shall state:

These statements have not been evaluated by the Food and Drug Administration. This product is not intended to diagnose, treat, cure, or prevent any disease.

(d) *Placement*. The disclaimer shall be placed adjacent to the statement with no intervening material or linked to the statement with a symbol (e.g., an asterisk) at the end of each such statement that refers to the same symbol placed adjacent to the disclaimer specified in paragraphs (c)(1) or (c)(2) of this section. On product labels and in labeling (e.g., pamphlets, catalogs), the disclaimer shall appear on each panel or page where there such is a statement. The disclaimer shall be set off in a box where it is not adjacent to the statement in question.

(e) *Typesize*. The disclaimer in paragraph (c) of this section shall appear in boldface type in letters of a typesize no smaller than one-sixteenth inch.

(f) *Permitted structure/function statements*. Dietary supplement labels or labeling may, subject to the requirements in paragraphs (a) through (e) of this section, bear statements that describe the role of a nutrient or dietary ingredient intended to affect the structure or function in humans or that characterize the documented mechanism by which a nutrient or dietary ingredient acts to maintain such structure or function, provided that such statements are not disease claims under paragraph (g) of this section. If the label or labeling of a product marketed as a dietary supplement bears a disease claim as defined in paragraph (g) of this section, the product will be subject to regulation as a drug unless the claim is an authorized health claim for which the product qualifies.

(g) *Disease claims*. (1) For purposes of 21 U.S.C. 343(r)(6), a ''disease'' is damage to an organ, part, structure, or system of the body such that it does not function properly (e.g., cardiovascular disease), or a state of health leading to such dysfunctioning (e.g., hypertension); except that diseases resulting from essential nutrient deficiencies (e.g., scurvy, pellagra) are not included in this definition.

(2) FDA will find that a statement about a product claims to diagnose, mitigate, treat, cure, or prevent disease (other than a classical nutrient deficiency disease) under 21 U.S.C. 343(r)(6) if it meets one or more of the

criteria listed below. These criteria are not intended to classify as disease claims statements that refer to the ability of a product to maintain healthy structure or function, unless the statement implies disease prevention or treatment. In determining whether a statement is a disease claim under these criteria, FDA will consider the context in which the claim is presented. A statement claims to diagnose, mitigate, treat, cure, or prevent disease if it claims, explicitly or implicitly, that the product:

(i) Has an effect on a specific disease or class of diseases;

(ii) Has an effect on the characteristic signs or symptoms of a specific disease or class of diseases, using scientific or lay terminology;

(iii) Has an effect on an abnormal condition associated with a natural state or process, if the abnormal condition is uncommon or can cause significant or permanent harm;

(iv) Has an effect on a disease or diseases through one or more of the following factors:

(A) The name of the product;

(B) A statement about the formulation of the product, including a claim that the product contains an ingredient (other than an ingredient that is an article included in the definition of ''dietary supplement'' under 21 U.S.C. 321(ff)(3)) that has been regulated by FDA as a drug and is well known to consumers for its use or claimed use in preventing or treating a disease;

(C) Citation of a publication or reference, if the citation refers to a disease use, and if, in the context of the labeling as a whole, the citation implies treatment or prevention of a disease, e.g., through placement on the immediate product label or packaging, inappropriate prominence, or lack of relationship to the product's express claims;

(D) Use of the term ''disease'' or ''diseased,'' except in general statements about disease prevention that do not refer explicitly or implicitly to a specific disease or class of diseases or to a specific product or ingredient; or

(E) Use of pictures, vignettes, symbols, or other means;

(v) Belongs to a class of products that is intended to diagnose, mitigate, treat, cure, or prevent a disease;

(vi) Is a substitute for a product that is a therapy for a disease;

(vii) Augments a particular therapy or drug action that is intended to diagnose, mitigate, treat, cure, or prevent a disease or class of diseases;

(viii) Has a role in the body's response to a disease or to a vector of disease;

(ix) Treats, prevents, or mitigates adverse events associated with a therapy for a disease, if the adverse events constitute diseases; or

(x) Otherwise suggests an effect on a disease or diseases.

[62 FR 49886, Sept. 23, 1997, as amended at 62 FR 49867, Sept. 23, 1997; 65 FR 1050, Jan. 6, 2000; 66 FR 17358, Mar. 30, 2001; 66 FR 56035, Nov. 6, 2001]

§ 101.95 "Fresh," "freshly frozen," "fresh frozen," "frozen fresh."

The terms defined in this section may be used on the label or in labeling of a food in conformity with the provisions of this section. The requirements of the section pertain to any use of the subject terms as described in paragraphs (a) and (b) of this section that expressly or implicitly refers to the food on labels or labeling, including use in a brand name and use as a sensory modifier. However, the use of the term ''fresh'' on labels or labeling is not subject to the requirements of paragraph (a) of this section if the term does not suggest or imply that a food is unprocessed or unpreserved. For example, the term ''fresh'' used to describe pasteurized whole milk is not subject to paragraph (a) of this section because the term does not imply that the food is unprocessed (consumers commonly understand that milk is nearly always pasteurized). However, the term ''fresh'' to describe pasta sauce that has been pasteurized or that contains pasteurized ingredients would be subject to paragraph (a) of this section because the term implies that the food is not processed or preserved. Uses of fresh not subject to this regulation will be governed by the provisions of 403(a) of the Federal Food, Drug, and Cosmetic Act (the act).

(a) The term ''fresh,'' when used on the label or in labeling of a food in a manner that suggests or implies that the food is unprocessed, means that the food is in its raw state and has not been frozen or subjected to any form of thermal processing or any other form of preservation, except as provided in paragraph (c) of this section.

(b) The terms ''fresh frozen'' and ''frozen fresh,'' when used on the label or in labeling of a food, mean that the food was quickly frozen while still fresh (i.e., the food had been recently harvested when frozen). Blanching of the food before freezing will not preclude use of the term ''fresh frozen'' to describe the food. ''Quickly frozen'' means frozen by a freezing system such as blast-freezing (sub-zero Fahrenheit temperature with fast moving air directed at the food) that ensures the food is frozen, even to the center of the food, quickly and that virtually no deterioration has taken place.

(c) *Provisions and restrictions.* (1) The following do not preclude the food from use of the term ''fresh:''

(i) The addition of approved waxes or coatings;

(ii) The post-harvest use of approved pesticides;

(iii) The application of a mild chlorine wash or mild acid wash on produce; or

(iv) The treatment of raw foods with ionizing radiation not to exceed the maximum dose of 1 kiloGray in accordance with § 179.26 of this chapter.

(2) A food meeting the definition in paragraph (a) of this section that is refrigerated is not precluded from use of ''fresh'' as provided by this section.

[58 FR 2426, Jan. 6, 1993]

Subpart G—Exemptions From Food Labeling Requirements

§ 101.100 Food; exemptions from labeling.

(a) The following foods are exempt from compliance with the requirements of section 403(i)(2) of the act (requiring a declaration on the label of the common or usual name of each ingredient when the food is fabricated from two or more ingredients).

(1) An assortment of different items of food, when variations in the items that make up different packages packed from such assortment normally occur in good packing practice and when such variations result in variations in the ingredients in different packages, with respect to any ingredient that is not common to all packages. Such exemption, however, shall be on the condition that the label shall bear, in conjunction with the names of such ingredients as are common to all packages, a statement (in terms that are as informative as practicable and that are not misleading) indicating by name other ingredients which may be present.

(2) A food having been received in bulk containers at a retail establishment, if displayed to the purchaser with either:

(i) The labeling of the bulk container plainly in view, provided ingredient information appears prominently and conspicuously in lettering of not less than one-fourth of an inch in height; or

(ii) A counter card, sign, or other appropriate device bearing prominently and conspicuously, but in no case with lettering of less than one-fourth of an inch in height, the information required to be stated on the label pursuant to section 403(i)(2) of the Federal Food, Drug, and Cosmetic Act (the act).

(3) Incidental additives that are present in a food at insignificant levels and do not have any technical or functional effect in that food. For the purposes of this paragraph (a)(3), incidental additives are:

(i) Substances that have no technical or functional effect but are present in a food by reason of having been incorporated into the food as an ingredient of another food, in which the substance did have a functional or technical effect.

(ii) Processing aids, which are as follows:

(*a*) Substances that are added to a food during the processing of such food but are removed in some manner from the food before it is packaged in its finished form.

(*b*) Substances that are added to a food during processing, are converted into constituents normally present in

the food, and do not significantly increase the amount of the constitutents naturally found in the food.

(*c*) Substances that are added to a food for their technical or functional effect in the processing but are present in the finished food at insignificant levels and do not have any technical or functional effect in that food.

(iii) Substances migrating to food from equipment or packaging or otherwise affecting food that are not food additives as defined in section 201(s) of the act; or if they are food additives as so defined, they are used in conformity with regulations established pursuant to section 409 of the act.

(4) For the purposes of paragraph (a)(3) of this section, any sulfiting agent (sulfur dioxide, sodium sulfite, sodium bisulfite, potassium bisulfite, sodium metabisulfite, and potassium metabisulfite) that has been added to any food or to any ingredient in any food and that has no technical effect in that food will be considered to be present in an insignificant amount only if no detectable amount of the agent is present in the finished food. A detectable amount of sulfiting agent is 10 parts per million or more of the sulfite in the finished food. Compliance with this paragraph will be determined using sections 20.123–20.125, ''Total Sulfurous Acid,'' in ''Official Methods of Analysis of the Association of Official Analytical Chemists,'' 14th Ed. (1984), which is incorporated by reference and the refinements of the ''Total Sulfurous Acid'' procedure in the ''Monier-Williams Procedure (with Modifications) for Sulfites in Foods,'' which is appendix A to part 101. A copy of sections 20.123–20–125 of the Official Methods of Analysis of the Association of Official Analytical Chemists'' is available from the AOAC INTERNATIONAL, 481 North Frederick Ave., suite 500, Gaithersburg, MD 20877, or available for inspection at the National Archives and Records Administration (NARA). For information on the availability of this material at NARA, call 202–741–6030, or go to: *http://www.archives.gov/federal_register/code_of_federal_regulations/ibr_locations.html.*

(b) A food repackaged in a retail establishment is exempt from the following provisions of the act if the conditions specified are met.

(1) Section 403(e)(1) of the act (requiring a statement on the label of the name and place of business of the manufacturer, packer, or distributor).

(2) Section 403(g)(2) of the act (requiring the label of a food which purports to be or is represented as one for which a definition and standard of identity has been prescribed to bear the name of the food specified in the definition and standard and, insofar as may be required by the regulation establishing the standard the common names of the optional ingredients present in the food), if the food is displayed to the purchaser with its interstate labeling clearly in view, or with a counter card, sign, or other appropriate device bearing prominently and conspicuously the information required by these provisions.

(3) Section 403(i)(1) of the act (requiring the label to bear the common or usual name of the food), if the food is displayed to the purchaser with its interstate labeling clearly in view, or with a counter card, sign, or other appropriate device bearing prominently and conspicuously the common or usual name of the food, or if the common or usual name of the food is clearly revealed by its appearance.

(c) An open container (a container of rigid or semirigid construction, which is not closed by lid, wrapper, or otherwise other than by an uncolored transparent wrapper which does not obscure the contents) of a fresh fruit or fresh vegetable, the quantity of contents of which is not more than 1 dry quart, shall be exempt from the labeling requirements of sections 403(e), (g)(2) (with respect to the name of the food specified in the definition and standard), and (i)(1) of the act; but such exemption shall be on the condition that if two or more such containers are enclosed in a crate or other shipping package, such crate or package shall bear labeling showing the number of such containers enclosed therein and the quantity of the contents of each.

(d) Except as provided by paragraphs (e) and (f) of this section, a shipment or other delivery of a food which is, in accordance with the practice of the trade, to be processed, labeled, or repacked in

substantial quantity at an establishment other than that where originally processed or packed, shall be exempt, during the time of introduction into and movement in interstate commerce and the time of holding in such establishment, from compliance with the labeling requirements of section 403 (c), (e), (g), (h), (i), (k), and (q) of the act if:

(1) The person who introduced such shipment or delivery into interstate commerce is the operator of the establishment where such food is to be processed, labeled, or repacked; or

(2) In case such person is not such operator, such shipment or delivery is made to such establishment under a written agreement, signed by and containing the post office addresses of such person and such operator, and containing such specifications for the processing, labeling, or repacking, as the case may be, of such food in such establishment as will ensure, if such specifications are followed, that such food will not be adulterated or misbranded within the meaning of the act upon completion of such processing, labeling, or repacking. Such person and such operator shall each keep a copy of such agreement until 2 years after the final shipment or delivery of such food from such establishment, and shall make such copies available for inspection at any reasonable hour to any officer or employee of the Department who requests them.

(3) The article is an egg product subject to a standard of identity promulgated in part 160 of this chapter, is to be shipped under the conditions specified in paragraph (d) (1) or (2) of this section and for the purpose of pasteurization or other treatment as required in such standard, and each container of such egg product bears a conspicuous tag or label reading ''Caution—This egg product has not been pasteurized or otherwise treated to destroy viable Salmonella microorganisms''. In addition to safe and suitable bactericidal processes designed specifically for Salmonella destruction in egg products, the term ''other treatment'' in the first sentence of this paragraph shall include use in acidic dressings in the processing of which the pH is not above 4.1 and the acidity of the aqueous phase, expressed as acetic acid, is not less than 1.4 percent, subject also to the conditions that:

(i) The agreement required in paragraph (d)(2) of this section shall also state that the operator agrees to utilize such unpasteurized egg products in the processing of acidic dressings according to the specifications for pH and acidity set forth in this paragraph, agrees not to deliver the acidic dressing to a user until at least 72 hours after such egg product is incorporated in such acidic dressing, and agrees to maintain for inspection adequate records covering such processing for 2 years after such processing.

(ii) In addition to the caution statement referred to above, the container of such egg product shall also bear the statement ''Unpasteurized _____ for use in acidic dressings only'', the blank being filled in with the applicable name of the eggs or egg product.

(e) Conditions affecting expiration of exemptions:

(1) An exemption of a shipment or other delivery of a food under paragraph (d) (1) or (3) of this section shall, at the beginning of the act of removing such shipment or delivery, or any part thereof, from such establishment become void ab initio if the food comprising such shipment, delivery, or part is adulterated or misbranded within the meaning of the act when so removed.

(2) An exemption of a shipment or other delivery of a food under paragraph (d) (2) or (3) of this section shall become void ab initio with respect to the person who introduced such shipment or delivery into interstate commerce upon refusal by such person to make available for inspection a copy of the agreement, as required by paragraph (d) (2) or (3) of this section.

(3) An exemption of a shipment or other delivery of a food under paragraph (d) (2) or (3) of this section shall expire:

(i) At the beginning of the act of removing such shipment or delivery, or any part thereof, from such establishment if the food constituting such shipment, delivery, or part is adulterated or misbranded within the meaning of the act when so removed; or

(ii) Upon refusal by the operator of the establishment where such food is to

be processed, labeled, or repacked, to make available for inspection a copy of the agreement, as required by such paragraph.

(f) The word ''processed'' as used in this paragraph shall include the holding of cheese in a suitable warehouse at a temperature of not less than 35 °F for the purpose of aging or curing to bring the cheese into compliance with requirements of an applicable definition and standard of identity. The exemptions provided for in paragraph (d) of this section shall apply to cheese which is, in accordance with the practice of the trade, shipped to a warehouse for aging or curing, on condition that the cheese is identified in the manner set forth in one of the applicable following paragraphs, and in such case the provisions of paragraph (e) of this section shall also apply:

(1) In the case of varieties of cheese for which definitions and standards of identity require a period of aging whether or not they are made from pasteurized milk, each such cheese shall bear on the cheese a legible mark showing the date at which the preliminary manufacturing process has been completed and at which date curing commences, and to each cheese, on its wrapper or immediate container, shall be affixed a removable tag bearing the statement ''Uncured _____ cheese for completion of curing and proper labeling'', the blank being filled in with the applicable name of the variety of cheese. In the case of swiss cheese, the date at which the preliminary manufacturing process had been completed and at which date curing commences is the date on which the shaped curd is removed from immersion in saturated salt solution as provided in the definition and standard of identity for swiss cheese, and such cheese shall bear a removable tag reading, ''To be cured and labeled as 'swiss cheese,' but if eyes do not form, to be labeled as 'swiss cheese for manufacturing' ''.

(2) In the case of varieties of cheeses which when made from unpasteurized milk are required to be aged for not less than 60 days, each such cheese shall bear a legible mark on the cheese showing the date at which the preliminary manufacturing process has been completed and at which date curing commences, and to each such cheese or its wrapper or immediate container shall be affixed a removable tag reading, ''_____ cheese made from unpasteurized milk. For completion of curing and proper labeling'', the blank being filled in with the applicable name of the variety of cheese.

(3) In the case of cheddar cheese, washed curd cheese, colby cheese, granular cheese, and brick cheese made from unpasteurized milk, each such cheese shall bear a legible mark on the cheese showing the date at which the preliminary manufacturing process has been completed and at which date curing commences, and to each such cheese or its wrapper or immediate container shall be affixed a removable tag reading ''_____ cheese made from unpasteurized milk. For completion of curing and proper labeling, or for labeling as _____ cheese for manufacturing'', the blank being filled in with the applicable name of the variety of cheese.

(g) The label declaration of a harmless marker used to identify a particular manufacturer's product may result in unfair competition through revealing a trade secret. Exemption from the label declaration of such a marker is granted, therefore, provided that the following conditions are met:

(1) The person desiring to use the marker without label declaration of its presence has submitted to the Commissioner of Food and Drugs full information concerning the proposed usage and the reasons why he believes label declaration of the marker should be subject to this exemption; and

(2) The person requesting the exemption has received from the Commissioner of Food and Drugs a finding that the marker is harmless and that the exemption has been granted.

(h) Wrapped fish fillets of nonuniform weight intended to be unpacked and marked with the correct weight at or before the point of retail sale in an establishment other than that where originally packed shall be exempt from the requirement of section 403(e)(2) of the act during introduction and movement in interstate commerce and while held for sale prior to weighing and marking:

(1) *Provided*, That (i) The outside container bears a label declaration of the total net weight; and

(ii) The individual packages bear a conspicuous statement ''To be weighed at or before time of sale'' and a correct statement setting forth the weight of the wrapper;

(2) *Provided further*, That it is the practice of the retail establishment to weigh and mark the individual packages with a correct net-weight statement prior to or at the point of retail sale. A statement of the weight of the wrapper shall be set forth so as to be readily read and understood, using such term as ''wrapper tare—ounce'', the blank being filled in with the correct average weight of the wrapper used.

(3) The act of delivering the wrapped fish fillets during the retail sale without the correct net-weight statement shall be deemed an act which results in the product's being misbranded while held for sale. Nothing in this paragraph shall be construed as requiring net-weight statements for wrapped fish fillets delivered into institutional trade provided the outside container bears the required information.

(i) Wrapped clusters (consumer units) of bananas of nonuniform weight intended to be unpacked from a master carton or container and weighed at or before the point of retail sale in an establishment other than that where originally packed shall be exempt from the requirements of section 403(e)(2) of the act during introduction and movement in interstate commerce and while held for sale prior to weighing:

(1) *Provided*, That (i) The master carton or container bears a label declaration of the total net weight; and

(ii) The individual packages bear a conspicuous statement ''To be weighed at or before the time of sale'' and a correct statement setting forth the weight of the wrapper; using such term as ''wrapper tare __ ounce'', the blank being filled in with the correct average weight of the wrapper used;

(2) *Provided further*, That it is the practice of the retail establishment to weigh the individual packages either prior to or at the time of retail sale.

(3) The act of delivering the wrapped clusters (consumer units) during the retail sale without an accurate net weight statement or alternatively without weighing at the time of sale shall be deemed an act which results in the product's being misbranded while held for sale. Nothing in this paragraph shall be construed as requiring net-weight statements for clusters (consumer units) delivered into institutional trade, provided that the master container or carton bears the required information.

[42 FR 14308, Mar. 15, 1977, as amended at 51 FR 25017, July 9, 1986; 58 FR 2188, 2876, Jan. 6, 1993; 66 FR 17358, Mar. 30, 2001]

§ 101.108 Temporary exemptions for purposes of conducting authorized food labeling experiments.

(a) The food industry is encouraged to experiment voluntarily, under controlled conditions and in collaboration with the Food and Drug Administration, with and other formats for presenting nutrition and other related food labeling information that is consistent with the current quantitative system in §§ 101.9 and 105.66 of this chapter.

(b) Any firm that intends to undertake a labeling experiment that requires exemptions from certain requirements of §§ 101.9 and 105.66 of this chapter should submit a written proposal containing a thorough discussion of each of the following information items that apply to the particular experiment:

(1) A description of the labeling format to be tested;

(2) A statement of the criteria to be used in the experiment for assigning foods to categories, e.g., nutrient or other values defining ''low'' and ''reduced'';

(3) A draft of the material to be used in the store, e.g., shelf tags, booklets, posters, etc.;

(4) The dates on which the experiment will begin and end and on which a written report of analysis of the experimental data will be submitted to FDA, together with a commitment not to continue the experiment beyond the proposed ending date without FDA approval;

(5) The geographic area or areas in which the experiment is to be conducted;

(6) The mechanism to measure the effectiveness of the experiment;

(7) The method for conveying to consumers the required nutrition and other labeling information that is exempted from the label during the experiment;

(8) The method that will be or has been used to determine the actual nutritional characteristics of foods for which a claim is made; and

(9) A statement of the sections of the regulations for which an exemption is sought.

(c) The written proposal should be sent to the Division of Dockets Management (HFA–305), Food and Drug Administration, 5630 Fishers Lane, rm. 1061, Rockville, MD 20852. The proposal should be clearly identified as a request for a temporary exemption for purposes of conducting authorized food labeling experiments and submitted as a citizen petition under §10.30 of this chapter.

(d) Approval for food labeling experiments will be given by FDA in writing. Foods labeled in violation of existing regulations will be subject to regulatory action unless an FDA-approved exemption to the specific regulation has been granted for that specific product.

(e) Reporting requirements contained in §101.108(b) have been approved by this Office of Management and Budget and assigned number 0910–0151.

[48 FR 15240, Apr. 8, 1983, as amended at 59 FR 14364, Mar. 28, 1994; 62 FR 15343, Mar. 31, 1997]

APPENDIX A TO PART 101—MONIER-WILLIAMS PROCEDURE (WITH MODIFICATIONS) FOR SULFITES IN FOOD, CENTER FOR FOOD SAFETY AND APPLIED NUTRITION, FOOD AND DRUG ADMINISTRATION (NOVEMBER 1985)

The AOAC official method for sulfites (*Official Methods of Analysis*, 14th Edition, 20.123–20.125, AOAC INTERNATIONAL) has been modified, in FDA laboratories, to facilitate the determination of sulfites at or near 10 ppm in food. Method instructions, including modifications, are described below.

Apparatus—The apparatus shown diagrammatically (Figure 1) is designed to accomplish the selective transfer of sulfur dioxide from the sample in boiling aqueous hydrochloric acid to a solution of 3% hydrogen peroxide. This apparatus is easier to assemble than the official apparatus and the back pressure inside the apparatus is limited to the unavoidable pressure due to the height of the 3% H_2O_2 solution above the tip of the bubbler (F). Keeping the backpressure as low as possible reduces the likelihood that sulfur dioxide will be lost through leaks.

The apparatus should be assembled as shown in Fig. 1 with a thin film of stopcock grease on the sealing surfaces of all the joints except the joint between the separatory funnel and the flask. Each joint should be clamped together to ensure a complete seal throughout the analysis. The separatory funnel, B, should have a capacity of 100 ml or greater. An inlet adapter, A, with a hose connector (Kontes K–183000 or equivalent) is required to provide a means of applying a head of pressure above the solution. (A pressure equalizing dropping funnel is not recommended because condensate, perhaps with sulfur dioxide, is deposited in the funnel and the side arm.) The round bottom flask, C, is a 1000 ml flask with three 24/40 tapered joints. The gas inlet tube, D, (Kontes K–179000 or equivalent) should be of sufficient length to permit introduction of the nitrogen within 2.5 cm of the bottom of the flask. The Allihn condenser, E, (Kontes K–431000–2430 or equivalent) has a jacket length of 300 mm. The bubbler, F, was fabricated from glass according to the dimensions given in Fig. 2. The 3% hydrogen peroxide solution can be contained in a vessel, G, with an i.d. of *ca.* 2.5 cm and a depth of 18 cm.

Buret—A 10 ml buret (Fisher Cat. No. 03–848–2A or equivalent) with overflow tube and hose connections for an Ascarite tube or equivalent air scrubbing apparatus. This will permit the maintenance of a carbon dioxide-free atmosphere over the standardized 0.01*N* sodium hydroxide.

Chilled Water Circulator—The condensor must be chilled with a coolant, such as 20% methanol-water, maintained at 5 °C. A circulating pump equivalent to the Neslab Coolflow 33 is suitable.

Reagents

(a) *Aqueous hydrochloric acid, 4N.*—For each analysis prepare 90 ml of hydrochloric acid by adding 30 ml of concentrated hydrochloric acid (12N) to 60 ml of distilled water.

(b) *Methyl red indicator*—Dissolve 250 mg of methyl red in 100 ml ethanol.

(c) *Hydrogen peroxide solution, 3%*—Dilute ACS reagent grade 30% hydrogen peroxide to 3% with distilled water. Just prior to use, add three drops of methyl red indicator and titrate to a yellow end-point using 0.01*N* sodium hydroxide. If the end-point is exceeded discard the solution and prepare another 3% H_2O_2 solution.

(d) *Standardized titrant, 0.01N NaOH*—Certified reagent may be used (Fisher SO–5–284).

It should be standardized with reference standard potassium hydrogen phthalate.

(e) *Nitrogen*—A source of high purity nitrogen is required with a flow regulator that will maintain a flow of 200 cc per minute. To guard against the presence of oxygen in the nitrogen, an oxygen scrubbing solution such as an alkaline pyrogallol trap may be used. Prepare pyrogallol trap as follows:

1. Add 4.5 g pyrogallol to the trap.
2. Purge trap with nitrogen for 2 to 3 minutes.
3. Prepare a KOH solution prepared by adding 65g KOH to 85 ml distilled water (caution: heat).
4. Add the KOH solution to the trap while maintaining an atmosphere of nitrogen in the trap.

Determination

Assemble the apparatus as shown in Fig. 1. The flask C must be positioned in a heating mantle that is controlled by a power regulating device such as Variac or equivalent. Add 400 ml of distilled water to flask C. Close the stopcock of separatory funnel, B, and add 90 ml of 4*N* hydrochloric acid to the separatory funnel. Begin the flow of nitrogen at a rate of 200±10 cc/min. The condenser coolant flow must be initiated at this time. Add 30 ml of 3% hydrogen peroxide, which has been titrated to a yellow end-point with 0.01*N* NaOH, to container G. After fifteen minutes the apparatus and the distilled water will be thoroughly de-oxygenated and the apparatus is ready for sample introduction.

Sample preparation (solids)—Transfer 50 g of food, or a quantity of food with a convenient quantity of SO_2 (500 to 1500 mcg SO_2), to a food processor or blender. Add 100 ml of 5% ethanol in water and briefly grind the mixture. Grinding or blending should be continued only until the food is chopped into pieces small enough to pass through the 24/40 point of flask C.

Sample preparation (liquids)—Mix 50 g of the sample, or a quantity with a convenient quantity of SO_2 (500 to 1500 mcg SO_2), with 100 ml of 5% ethanol in water.

Sample introduction and distillation—Remove the separatory funnel B, and quantitatively transfer the food sample in aqueous ethanol to flask C. Wipe the tapered joint clean with a laboratory tissue, apply stopcock grease to the outer joint of the separatory funnel, and return the separatory funnel, B, to tapered joint flask C. The nitrogen flow through the 3% hydrogen peroxide solution should resume as soon as the funnel, B, is re-inserted into the appropriate joint in flask C. Examine each joint to ensure that it is sealed.

Apply a head pressure above the hydrochloric acid solution in B with a rubber bulb equipped with a valve. Open the stopcock in B and permit the hydrochloric acid solution to flow into flask C. Continue to maintain sufficient pressure above the acid solution to force the solution into the flask C. The stopcock may be closed, if necessary, to pump up the pressure above the acid and then opened again. Close the stopcock before the last few milliliters drain out of the separatory funnel, B, to guard against the escape of sulfur dioxide into the separatory funnel.

Apply the power to the heating mantle. Use a power setting which will cause 80 to 90 drops per minute of condensate to return to the flask from condenser, E. After 1.75 hours of boiling the contents of the 1000 ml flask and remove trap G.

Titration.—Titrate the contents with 0.01*N* sodium hydroxide. Titrate with 0.01*N* NaOH to a yellow end-point that persists for at least twenty seconds. Compute the sulfite content, expressed as micrograms sulfur dioxide per gram of food (ppm) as follows:

$$ppm = (32.03 \times V_B \times N \times 1000) \div Wt$$

where 32.03 = milliequivalent weight of sulfur dioxide; V_B = volume of sodium hydroxide titrant of normality, N, required to reach endpoint; the factor, 1000, converts milliequivalents to microequivalents and Wt = weight (g) of food sample introduced into the 1000 ml flask.

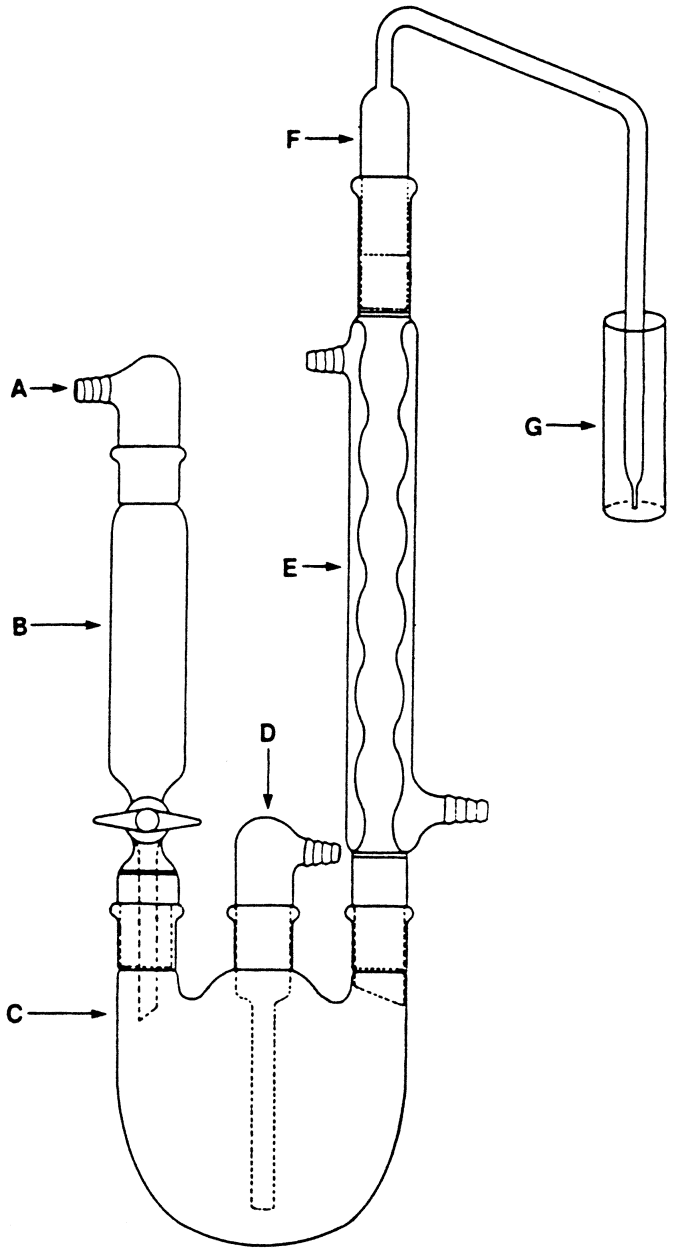

FIGURE 1. THE OPTIMIZED MONIER-WILLIAMS APPARATUS. COMPONENT IDENTIFICATION IS GIVEN IN TEXT.

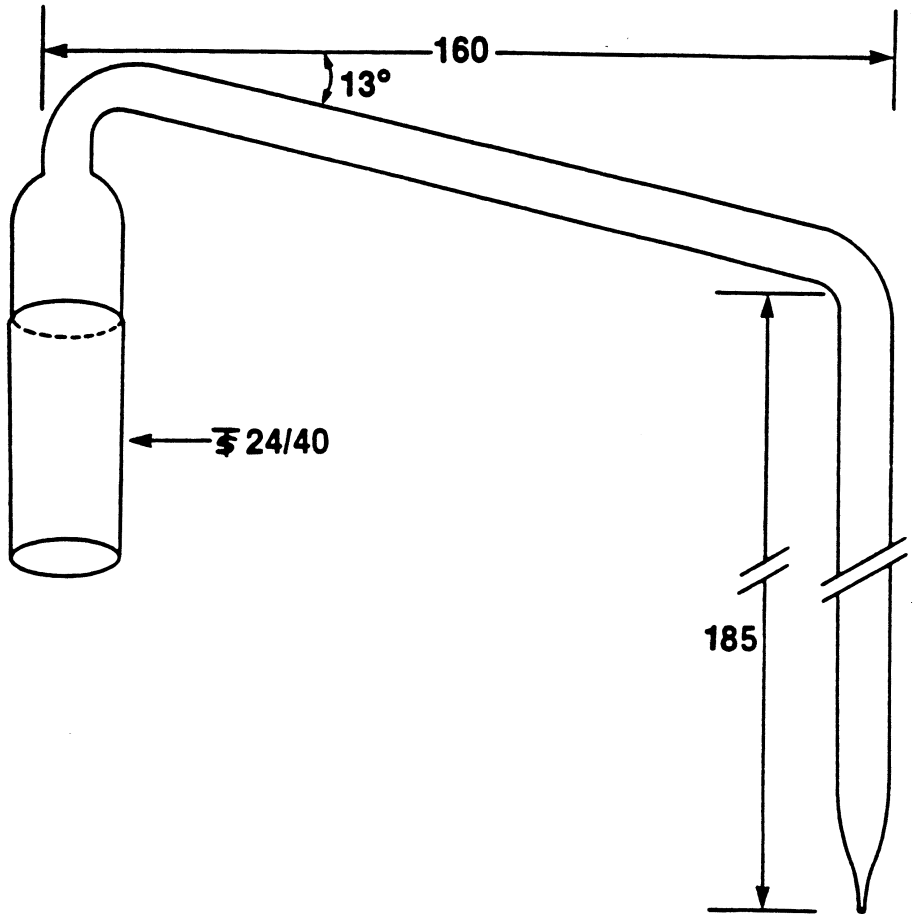

FIGURE 2. DIAGRAM OF BUBBLER (F IN FIGURE 1). LENGTHS ARE GIVEN IN MM.

[42 FR 14308, Mar. 15, 1977, as amended at 51 FR 25017, July 9, 1986]

APPENDIX B TO PART 101—GRAPHIC ENHANCEMENTS USED BY THE FDA

Examples of Graphic Enhancements used by the FDA

A. Overall

1. The Nutrition Facts label is boxed and contains all black or one color type printed on a white or neutral background.

B. Typeface and size

1. The "Nutrition Facts" label uses 6 point or larger Helvetica Black and/or Helvetica Regular type. In order to fit some formats, the typography may be kerned as much as -4 (tighter kerning reduces legibility).

2. Key nutrients and their % Daily Values are set in 8 point Helvetica Black. The "%" symbol also may be set in Helvetica Black.

3. "Nutrition Facts" is set in either Franklin Gothic Heavy or Helvetica Black to fit the width of the label flush left and flush right.

4. "Servings per container" is set in 10 point Helvetica Regular and "Serving size" is set in 10 point Helvetica Black and with 1 point of leading. "Amount per serving" is set in 6 point Helvetica Black.

5. "Calories" is set in 16 point Helvetica Black and the numerical value of calories is set in 22 point Helvetica Black.

6. Absolute measures of nutrient content (for example, "1g") and nutrient subgroups are set in 8 point Helvetica Regular with 4 points of leading.

7. Vitamins and minerals are set in 8 point Helvetica Regular, with 4 points of leading, separated by 8 point bullets.

8. The type for the footnote is set in 6 point Helvetica Regular with 1 point of leading.

C. Rules

1. A 7 point rule separates large groupings as shown in the example. A 3 point rule separates calorie information from the nutrient information.

2. A hairline rule or ¼ point rule separates individual nutrients, as shown in the example. Descenders do not touch rule. The top half of the label (nutrient information) has 2 points of leading between the type and the rules and the bottom half of the label (footnote) has 1 point of leading between the type and the rules. The rule above the "Added Sugars" declaration is shortened as shown in the example.

D. Box

1. All labels are enclosed by ½ point box rule within 3 points of text measure.

Examples of Graphic Enhancements used by the FDA

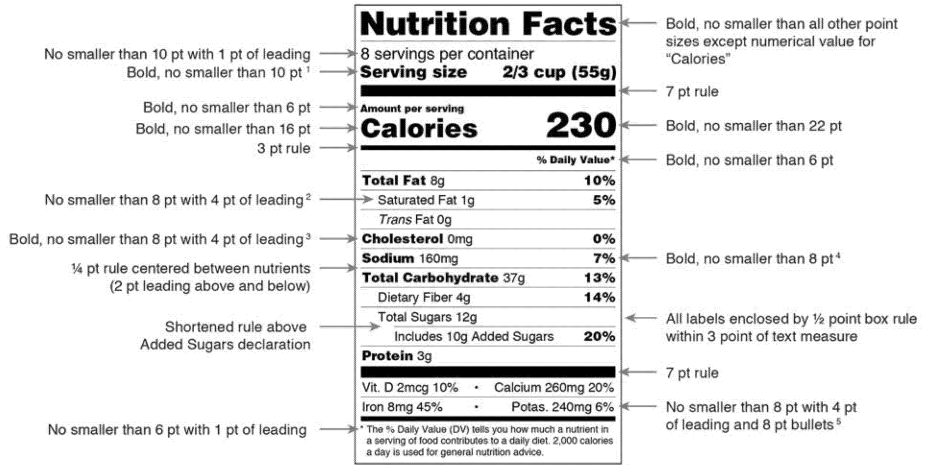

[1] Text in bold font is Helvetica Black; text not bolded is Helvetica Regular; leading may be "at least" the point size indicated in all instances

[1] "Serving size" declaration may be decreased to no smaller than 8 pt bold if additional space is needed for the declaration

[2] Saturated fat, *Trans* Fat, Dietary Fiber, Total Sugars, Added Sugars, voluntary nutrients (if listed) and their g/mg values: No smaller than 8 pt with 4 pt of leading

[3] Total Fat, Cholesterol, Sodium, Total Carbohydrate, and Protein: Bold, no smaller than 8 pt with 4 pt of leading

[4] % Daily Values for nutrients that appear between 7 point rules: Bold, no smaller than 8 pt.

[5] Vit. D, Calcium, Iron, Potas., voluntary nutrients (if listed) and their mg/mcg values and % Daily Values: No smaller than 8 pt and with 4 pt of leading

[83 FR 65504, Dec. 21, 2018]

Appendix C to Part 101.--Nutrition Facts for Raw Fruits and Vegetables

Nutrition facts[1] for raw fruits and vegetables edible portion	Calories	Calories from fat	Total Fat (g)	Total Fat (%)	Saturated Fat (g)	Saturated Fat (%)	Trans Fat (g)	Cholesterol (mg)	Cholesterol (%)	Sodium (mg)	Sodium (%)	Potassium (mg)	Potassium (%)	Total Carbohydrate (g)	Total Carbohydrate (%)	Dietary Fiber (g)	Dietary Fiber (%)	Sugars (g)	Protein (g)	Vitamin A (%)	Vitamin C (%)	Calcium (%)	Iron (%)
Apple, 1 large (242 g/8 oz)	130	0	0	0	0	0	0	0	0	0	0	260	7	34	11	5	20	25	1	2	8	2	2
Avocado, California, 1/5 medium (30 g/1.1 oz)	50	35	4.5	7	0.5	3	0	0	0	0	0	140	4	3	1	1	4	0	1	0	4	0	2
Banana, 1 medium (126 g/4.5 oz)	110	0	0	0	0	0	0	0	0	0	0	450	13	30	10	3	12	19	1	2	15	0	2
Cantaloupe, 1/4 medium (134 g/4.8 oz)	50	0	0	0	0	0	0	0	0	20	1	240	7	12	4	1	4	11	1	120	80	2	2
Grapefruit, 1/2 medium (154 g/5.5 oz)	60	0	0	0	0	0	0	0	0	0	0	160	5	15	5	2	8	11	1	35	100	4	0
Grapes, 3/4 cup (126 g/4.5 oz)	90	0	0	0	0	0	0	0	0	15	1	240	7	23	8	1	4	20	0	0	2	2	0
Honeydew Melon, 1/10 medium melon (134 g/4.8 oz)	50	0	0	0	0	0	0	0	0	30	1	210	6	12	4	1	4	11	1	2	45	2	2
Kiwifruit, 2 medium (148 g/5.3 oz)	90	10	1	2	0	0	0	0	0	0	0	450	13	20	7	4	16	13	1	2	240	4	2
Lemon, 1 medium (58 g/2.1 oz)	15	0	0	0	0	0	0	0	0	0	0	75	2	5	2	2	8	2	0	0	40	2	0
Lime, 1 medium (67 g/2.4 oz)	20	0	0	0	0	0	0	0	0	0	0	75	2	7	2	2	8	0	0	0	35	0	0
Nectarine, 1 medium (140 g/5.0 oz)	60	5	0.5	1	0	0	0	0	0	0	0	250	7	15	5	2	8	11	1	8	15	0	2
Orange, 1 medium (154 g/5.5 oz)	80	0	0	0	0	0	0	0	0	0	0	250	7	19	6	3	12	14	1	2	130	6	0
Peach, 1 medium (147 g/5.3 oz)	60	0	0.5	1	0	0	0	0	0	0	0	230	7	15	5	2	8	13	1	6	15	0	2
Pear, 1 medium (166 g/5.9 oz)	100	0	0	0	0	0	0	0	0	0	0	190	5	26	9	6	24	16	1	0	10	2	0
Pineapple, 2 slices, 3" diameter, 3/4" thick (112 g/4 oz)	50	0	0	0	0	0	0	0	0	10	0	120	3	13	4	1	4	10	1	2	50	2	2
Plums, 2 medium (151 g/5.4 oz)	70	0	0	0	0	0	0	0	0	0	0	230	7	19	6	2	8	16	1	8	10	0	2
Strawberries, 8 medium (147g/5.3 oz)	50	0	0	0	0	0	0	0	0	0	0	170	5	11	4	2	8	8	1	0	160	2	2
Sweet cherries, 21 cherries; 1 cup (140 g/5.0 oz)	100	0	0	0	0	0	0	0	0	0	0	350	10	26	9	1	4	16	1	2	15	2	2
Tangerine, 1 medium (109 g/3.9 oz)	50	0	0	0	0	0	0	0	0	0	0	160	5	13	4	2	8	9	1	6	45	4	0
Watermelon, 1/18 medium melon; 2 cups diced pieces (280 g/10.0 oz)	80	0	0	0	0	0	0	0	0	0	0	270	8	21	7	1	4	20	1	30	25	2	4

Appendix C to Part 101.--Nutrition Facts for Raw Fruits and Vegetables-continued

Nutrition facts[1] for raw fruits and vegetables edible portion	Calories	Calories from fat	Total Fat (g)	Total Fat (%)	Saturated Fat (g)	Saturated Fat (%)	Trans Fat (g)	Cholesterol (mg)	Cholesterol (%)	Sodium (mg)	Sodium (%)	Potassium (mg)	Potassium (%)	Total Carbohydrate (g)	Total Carbohydrate (%)	Dietary Fiber (g)	Dietary Fiber (%)	Sugars (g)	Protein (g)	Vitamin A (%)	Vitamin C (%)	Calcium (%)	Iron (%)
Asparagus, 5 spears (93 g/3.3 oz)	20	0	0	0	0	0	0	0	0	0	0	230	7	4	1	2	8	2	2	10	15	2	2
Bell pepper, 1 medium (148 g/5.3 oz)	25	0	0	0	0	0	0	0	0	40	2	220	6	6	2	2	8	4	1	4	190	2	4
Broccoli, 1 medium stalk (148 g/5.3 oz)	45	0	0.5	1	0	0	0	0	0	80	3	460	13	8	3	3	12	2	4	6	220	6	6
Carrot, 1 carrot, 7" long, 1 1/4" diameter (78 g/2.8 oz)	30	0	0	0	0	0	0	0	0	60	3	250	7	7	2	2	8	5	1	110	10	2	2
Cauliflower, 1/6 medium head (99 g/3.5 oz)	25	0	0	0	0	0	0	0	0	30	1	270	8	5	2	2	8	2	2	0	100	2	2
Celery, 2 medium stalks (110 g/3.9 oz)	15	0	0	0	0	0	0	0	0	115	5	260	7	4	1	2	8	2	0	10	15	4	2
Cucumber, 1/3 medium (99 g/3.5 oz)	10	0	0	0	0	0	0	0	0	0	0	140	4	2	1	1	4	1	1	4	10	2	2
Green (snap) beans, 3/4 cup cut (83 g/3.0 oz)	20	0	0	0	0	0	0	0	0	0	0	200	6	5	2	3	12	2	1	4	10	4	2
Green cabbage, 1/12 medium head (84 g/3.0 oz)	25	0	0	0	0	0	0	0	0	20	1	190	5	5	2	2	8	3	1	0	70	4	2
Green onion, 1/4 cup chopped (25 g/0.9 oz)	10	0	0	0	0	0	0	0	0	10	0	70	2	2	1	1	4	1	0	2	8	2	2
Iceberg lettuce, 1/6 medium head (89 g/3.2 oz)	10	0	0	0	0	0	0	0	0	10	0	125	4	2	1	1	4	2	1	6	6	2	2
Leaf lettuce, 1 1/2 cups shredded (85 g/3.0 oz)	15	0	0	0	0	0	0	0	0	35	1	170	5	2	1	1	4	1	1	130	6	2	4
Mushrooms, 5 medium (84 g/3.0 oz)	20	0	0	0	0	0	0	0	0	15	0	300	9	3	1	1	4	0	3	0	2	0	2
Onion, 1 medium (148 g/5.3 oz)	45	0	0	0	0	0	0	0	0	5	0	190	5	11	4	3	12	9	1	0	20	4	4
Potato, 1 medium (148 g/5.3 oz)	110	0	0	0	0	0	0	0	0	0	0	620	18	26	9	2	8	1	3	0	45	2	6
Radishes, 7 radishes (85 g/3.0 oz)	10	0	0	0	0	0	0	0	0	55	2	190	5	3	1	1	4	2	0	0	30	2	2
Summer squash, 1/2 medium (98 g/3.5 oz)	20	0	0	0	0	0	0	0	0	0	0	260	7	4	1	2	8	2	1	6	30	2	2
Sweet corn, kernels from 1 medium ear (90 g/3.2 oz)	90	20	2.5	4	0	0	0	0	0	0	0	250	7	18	6	2	8	5	4	2	10	0	2
Sweet Potato, 1 medium, 5" long, 2"diameter (130 g/4.6 oz)	100	0	0	0	0	0	0	0	0	70	3	440	13	23	8	4	16	7	2	120	30	4	4
Tomato, 1 medium (148 g/5.3 oz)	25	0	0	0	0	0	0	0	0	20	1	340	10	5	2	1	4	3	1	20	40	2	4

[1] Raw, edible weight portion. Percent (%) Daily Values are based on a 2,000 calorie diet.

APPENDIX D TO PART 101—NUTRITION FACTS FOR COOKED FISH

Appendix D to Part 101.--Nutrition Facts for Cooked Fish

Nutrition facts[1] fish (84 g/3 oz)	Calories	Calories from fat	Total Fat		Saturated Fat		Trans Fat	Cholesterol		Sodium		Potassium		Total Carbohydrate		Dietary Fiber		Sugars	Protein	Vitamin A	Vitamin C	Calcium	Iron
			(g)	(%)	(g)	(%)	(g)	(mg)	(%)	(mg)	(%)	(mg)	(%)	(g)	(%)	(g)	(%)	(g)	(g)	(%)	(%)	(%)	(%)
Blue crab	100	10	1	2	0	0	0	95	32	330	14	300	9	0	0	0	0	0	20	0	4	10	4
Catfish	130	60	6	9	2	10	0	50	17	40	2	230	7	0	0	0	0	0	17	0	0	0	0
Clams, about 12 small	110	15	1.5	2	0	0	0	80	27	95	4	470	13	6	2	0	0	0	17	10	0	8	30
Cod	90	5	1	2	0	0	0	50	17	65	3	460	13	0	0	0	0	0	20	0	2	2	2
Flounder/sole	100	15	1.5	2	0	0	0	55	18	100	4	390	11	0	0	0	0	0	19	0	0	2	0
Haddock	100	10	1	2	0	0	0	70	23	85	4	340	10	0	0	0	0	0	21	2	0	2	6
Halibut	120	15	2	3	0	0	0	40	13	60	3	500	14	0	0	0	0	0	23	4	0	2	6
Lobster	80	0	0.5	1	0	0	0	60	20	320	13	300	9	1	0	0	0	0	17	2	0	6	2
Ocean perch	110	20	2	3	0.5	3	0	45	15	95	4	290	8	0	0	0	0	0	21	0	2	10	4
Orange roughy	80	5	1	2	0	0	0	20	7	70	3	340	10	0	0	0	0	0	16	2	0	4	2
Oysters, about 12 medium	100	35	4	6	1	5	0	80	27	300	13	220	6	6	2	0	0	0	10	0	6	6	45
Pollock	90	10	1	2	0	0	0	80	27	110	5	370	11	0	0	0	0	0	20	2	0	0	2
Rainbow trout	140	50	6	9	2	10	0	55	18	35	1	370	11	0	0	0	0	0	20	4	4	8	2
Rockfish	110	15	2	3	0	0	0	40	13	70	3	440	13	0	0	0	0	0	21	4	0	2	2
Salmon, Atlantic/Coho/Sockeye/Chinook	200	90	10	15	2	10	0	70	23	55	2	430	12	0	0	0	0	0	24	4	4	2	2
Salmon, Chum/Pink	130	40	4	6	1	5	0	70	23	65	3	420	12	0	0	0	0	0	22	2	0	2	4
Scallops, about 6 large or 14 small	140	10	1	2	0	0	0	65	22	310	13	430	12	5	2	0	0	0	27	2	0	4	14
Shrimp	100	10	1.5	2	0	0	0	170	57	240	10	220	6	0	0	0	0	0	21	4	4	6	10
Swordfish	120	50	6	9	1.5	8	0	40	13	100	4	310	9	0	0	0	0	0	16	2	2	0	6
Tilapia	110	20	2.5	4	1	5	0	75	25	30	1	360	10	0	0	0	0	0	22	0	2	0	2
Tuna	130	15	1.5	2	0	0	0	50	17	40	2	480	14	0	0	0	0	0	26	2	2	2	4

[1] Cooked, edible weight portion. Percent (%) Daily Values are based on a 2,000 calorie diet.

[71 FR 47439, AUG. 17, 2006]