AUTHENTICATED
U.S. GOVERNMENT
INFORMATION
GPO

CODE OF FEDERAL REGULATIONS

Title 40
Protection of Environment

Parts 136 to 149

Revised as of July 1, 2020

Containing a codification of documents
of general applicability and future effect

As of July 1, 2020

Published by the Office of the Federal Register
National Archives and Records Administration
as a Special Edition of the Federal Register

U.S. GOVERNMENT OFFICIAL EDITION NOTICE

Legal Status and Use of Seals and Logos

The seal of the National Archives and Records Administration (NARA) authenticates the Code of Federal Regulations (CFR) as the official codification of Federal regulations established under the Federal Register Act. Under the provisions of 44 U.S.C. 1507, the contents of the CFR, a special edition of the Federal Register, shall be judicially noticed. The CFR is prima facie evidence of the original documents published in the Federal Register (44 U.S.C. 1510).

It is prohibited to use NARA's official seal and the stylized Code of Federal Regulations logo on any republication of this material without the express, written permission of the Archivist of the United States or the Archivist's designee. Any person using NARA's official seals and logos in a manner inconsistent with the provisions of 36 CFR part 1200 is subject to the penalties specified in 18 U.S.C. 506, 701, and 1017.

Use of ISBN Prefix

This is the Official U.S. Government edition of this publication and is herein identified to certify its authenticity. Use of the 0–16 ISBN prefix is for U.S. Government Publishing Office Official Editions only. The Superintendent of Documents of the U.S. Government Publishing Office requests that any reprinted edition clearly be labeled as a copy of the authentic work with a new ISBN.

GPO U.S. GOVERNMENT PUBLISHING OFFICE

U.S. Superintendent of Documents • Washington, DC 20402–0001

http://bookstore.gpo.gov

Phone: toll-free (866) 512-1800; DC area (202) 512-1800

Table of Contents

	Page
Explanation	v
Title 40:	
Chapter I—Environmental Protection Agency (Continued)	3
Finding Aids:	
Table of CFR Titles and Chapters	1061
Alphabetical List of Agencies Appearing in the CFR	1081
List of CFR Sections Affected	1091

Cite this Code: CFR

To cite the regulations in this volume use title, part and section number. Thus, 40 CFR 136.1 *refers to title 40, part 136, section 1.*

Explanation

The Code of Federal Regulations is a codification of the general and permanent rules published in the Federal Register by the Executive departments and agencies of the Federal Government. The Code is divided into 50 titles which represent broad areas subject to Federal regulation. Each title is divided into chapters which usually bear the name of the issuing agency. Each chapter is further subdivided into parts covering specific regulatory areas.

Each volume of the Code is revised at least once each calendar year and issued on a quarterly basis approximately as follows:

Title 1 through Title 16.....as of January 1
Title 17 through Title 27.....as of April 1
Title 28 through Title 41.....as of July 1
Title 42 through Title 50.....as of October 1

The appropriate revision date is printed on the cover of each volume.

LEGAL STATUS

The contents of the Federal Register are required to be judicially noticed (44 U.S.C. 1507). The Code of Federal Regulations is prima facie evidence of the text of the original documents (44 U.S.C. 1510).

HOW TO USE THE CODE OF FEDERAL REGULATIONS

The Code of Federal Regulations is kept up to date by the individual issues of the Federal Register. These two publications must be used together to determine the latest version of any given rule.

To determine whether a Code volume has been amended since its revision date (in this case, July 1, 2020), consult the ''List of CFR Sections Affected (LSA),'' which is issued monthly, and the ''Cumulative List of Parts Affected,'' which appears in the Reader Aids section of the daily Federal Register. These two lists will identify the Federal Register page number of the latest amendment of any given rule.

EFFECTIVE AND EXPIRATION DATES

Each volume of the Code contains amendments published in the Federal Register since the last revision of that volume of the Code. Source citations for the regulations are referred to by volume number and page number of the Federal Register and date of publication. Publication dates and effective dates are usually not the same and care must be exercised by the user in determining the actual effective date. In instances where the effective date is beyond the cutoff date for the Code a note has been inserted to reflect the future effective date. In those instances where a regulation published in the Federal Register states a date certain for expiration, an appropriate note will be inserted following the text.

OMB CONTROL NUMBERS

The Paperwork Reduction Act of 1980 (Pub. L. 96–511) requires Federal agencies to display an OMB control number with their information collection request.

Many agencies have begun publishing numerous OMB control numbers as amendments to existing regulations in the CFR. These OMB numbers are placed as close as possible to the applicable recordkeeping or reporting requirements.

PAST PROVISIONS OF THE CODE

Provisions of the Code that are no longer in force and effect as of the revision date stated on the cover of each volume are not carried. Code users may find the text of provisions in effect on any given date in the past by using the appropriate List of CFR Sections Affected (LSA). For the convenience of the reader, a ''List of CFR Sections Affected'' is published at the end of each CFR volume. For changes to the Code prior to the LSA listings at the end of the volume, consult previous annual editions of the LSA. For changes to the Code prior to 2001, consult the List of CFR Sections Affected compilations, published for 1949-1963, 1964-1972, 1973-1985, and 1986-2000.

''[RESERVED]'' TERMINOLOGY

The term ''[Reserved]'' is used as a place holder within the Code of Federal Regulations. An agency may add regulatory information at a ''[Reserved]'' location at any time. Occasionally ''[Reserved]'' is used editorially to indicate that a portion of the CFR was left vacant and not dropped in error.

INCORPORATION BY REFERENCE

What is incorporation by reference? Incorporation by reference was established by statute and allows Federal agencies to meet the requirement to publish regulations in the Federal Register by referring to materials already published elsewhere. For an incorporation to be valid, the Director of the Federal Register must approve it. The legal effect of incorporation by reference is that the material is treated as if it were published in full in the Federal Register (5 U.S.C. 552(a)). This material, like any other properly issued regulation, has the force of law.

What is a proper incorporation by reference? The Director of the Federal Register will approve an incorporation by reference only when the requirements of 1 CFR part 51 are met. Some of the elements on which approval is based are:

(a) The incorporation will substantially reduce the volume of material published in the Federal Register.

(b) The matter incorporated is in fact available to the extent necessary to afford fairness and uniformity in the administrative process.

(c) The incorporating document is drafted and submitted for publication in accordance with 1 CFR part 51.

What if the material incorporated by reference cannot be found? If you have any problem locating or obtaining a copy of material listed as an approved incorporation by reference, please contact the agency that issued the regulation containing that incorporation. If, after contacting the agency, you find the material is not available, please notify the Director of the Federal Register, National Archives and Records Administration, 8601 Adelphi Road, College Park, MD 20740-6001, or call 202-741-6010.

CFR INDEXES AND TABULAR GUIDES

A subject index to the Code of Federal Regulations is contained in a separate volume, revised annually as of January 1, entitled CFR INDEX AND FINDING AIDS. This volume contains the Parallel Table of Authorities and Rules. A list of CFR titles, chapters, subchapters, and parts and an alphabetical list of agencies publishing in the CFR are also included in this volume.

An index to the text of ''Title 3—The President'' is carried within that volume.

The Federal Register Index is issued monthly in cumulative form. This index is based on a consolidation of the ''Contents'' entries in the daily Federal Register.

A List of CFR Sections Affected (LSA) is published monthly, keyed to the revision dates of the 50 CFR titles.

REPUBLICATION OF MATERIAL

There are no restrictions on the republication of material appearing in the Code of Federal Regulations.

INQUIRIES

For a legal interpretation or explanation of any regulation in this volume, contact the issuing agency. The issuing agency's name appears at the top of odd-numbered pages.

For inquiries concerning CFR reference assistance, call 202–741–6000 or write to the Director, Office of the Federal Register, National Archives and Records Administration, 8601 Adelphi Road, College Park, MD 20740-6001 or e-mail *fedreg.info@nara.gov*.

SALES

The Government Publishing Office (GPO) processes all sales and distribution of the CFR. For payment by credit card, call toll-free, 866-512-1800, or DC area, 202-512-1800, M-F 8 a.m. to 4 p.m. e.s.t. or fax your order to 202-512-2104, 24 hours a day. For payment by check, write to: US Government Publishing Office – New Orders, P.O. Box 979050, St. Louis, MO 63197-9000.

ELECTRONIC SERVICES

The full text of the Code of Federal Regulations, the LSA (List of CFR Sections Affected), The United States Government Manual, the Federal Register, Public Laws, Public Papers of the Presidents of the United States, Compilation of Presidential Documents and the Privacy Act Compilation are available in electronic format via *www.govinfo.gov*. For more information, contact the GPO Customer Contact Center, U.S. Government Publishing Office. Phone 202-512-1800, or 866-512-1800 (toll-free). E-mail, *ContactCenter@gpo.gov*.

The Office of the Federal Register also offers a free service on the National Archives and Records Administration's (NARA) website for public law numbers, Federal Register finding aids, and related information. Connect to NARA's website at *www.archives.gov/federal-register*.

The e-CFR is a regularly updated, unofficial editorial compilation of CFR material and Federal Register amendments, produced by the Office of the Federal Register and the Government Publishing Office. It is available at *www.ecfr.gov*.

OLIVER A. POTTS,
Director,
Office of the Federal Register
July 1, 2020

THIS TITLE

Title 40—PROTECTION OF ENVIRONMENT is composed of thirty-seven volumes. The parts in these volumes are arranged in the following order: Parts 1–49, parts 50–51, part 52 (52.01–52.1018), part 52 (52.1019–52.2019), part 52 (52.2020–end of part 52), parts 53–59, part 60 (60.1–60.499), part 60 (60.500–end of part 60, sections), part 60 (Appendices), parts 61–62, part 63 (63.1–63.599), part 63 (63.600–63.1199), part 63 (63.1200–63.1439), part 63 (63.1440–63.6175), part 63 (63.6580–63.8830), part 63 (63.8980–end of part 63), parts 64–71, parts 72–79, part 80, part 81, parts 82–86, parts 87–95, parts 96–99, parts 100–135, parts 136–149, parts 150–189, parts 190–259, parts 260–265, parts 266–299, parts 300–399, parts 400–424, parts 425–699, parts 700–722, parts 723–789, parts 790–999, parts 1000–1059, and part 1060 to end. The contents of these volumes represent all current regulations codified under this title of the CFR as of July 1, 2020.

Chapter I—Environmental Protection Agency appears in all thirty-seven volumes. OMB control numbers for title 40 appear in § 9.1 of this chapter.

Chapters IV–VIII—Regulations issued by the Environmental Protection Agency and Department of Justice, Council on Environmental Quality, Chemical Safety and Hazard Investigation Board, Environmental Protection Agency and Department of Defense; Uniform National Discharge Standards for Vessels of the Armed Forces, and the Gulf Coast Ecosystem Restoration Council appear in volume thirty seven.

For this volume, Cheryl E. Sirofchuck was Chief Editor. The Code of Federal Regulations publication program is under the direction of John Hyrum Martinez, assisted by Stephen J. Frattini.

Title 40—Protection of Environment

(This book contains parts 136 to 149)

Part

CHAPTER I—Environmental Protection Agency (Continued) 136

CHAPTER I—ENVIRONMENTAL PROTECTION AGENCY (CONTINUED)

EDITORIAL NOTE: Nomenclature changes to chapter I appear at 65 FR 47324, 47325, Aug. 2, 2000, and at 66 FR 34375, 34376, June 28, 2001.

SUBCHAPTER D—WATER PROGRAMS (CONTINUED)

Part		*Page*
136	Guidelines establishing test procedures for the analysis of pollutants	5
140	Marine sanitation device standard	419
141	National primary drinking water regulations	423
142	National primary drinking water regulations implementation	737
143	National secondary drinking water regulations	797
144	Underground injection control program	802
145	State UIC program requirements	871
146	Underground injection control program: Criteria and standards	884
147	State, tribal, and EPA-administered underground injection control programs	937
148	Hazardous waste injection restrictions	1043
149	Sole source aquifers	1052

SUBCHAPTER D—WATER PROGRAMS (CONTINUED)

PART 136—GUIDELINES ESTABLISHING TEST PROCEDURES FOR THE ANALYSIS OF POLLUTANTS

Sec.
136.1 Applicability.
136.2 Definitions.
136.3 Identification of test procedures.
136.4 Application for and approval of alternate test procedures for nationwide use.
136.5 Approval of alternate test procedures for limited use.
136.6 Method modifications and analytical requirements.
136.7 Quality assurance and quality control.
APPENDIX A TO PART 136—METHODS FOR ORGANIC CHEMICAL ANALYSIS OF MUNICIPAL AND INDUSTRIAL WASTEWATER
APPENDIX B TO PART 136—DEFINITION AND PROCEDURE FOR THE DETERMINATION OF THE METHOD DETECTION LIMIT—REVISION 1.11
APPENDIX C TO PART 136—DETERMINATION OF METALS AND TRACE ELEMENTS IN WATER AND WASTES BY INDUCTIVELY COUPLED PLASMA-ATOMIC EMISSION SPECTROMETRY METHOD 200.7
APPENDIX D TO PART 136—PRECISION AND RECOVERY STATEMENTS FOR METHODS FOR MEASURING METALS

AUTHORITY: Secs. 301, 304(h), 307 and 501(a), Pub. L. 95–217, 91 Stat. 1566, *et seq.* (33 U.S.C. 1251, *et seq.*) (the Federal Water Pollution Control Act Amendments of 1972 as amended by the Clean Water Act of 1977).

§ 136.1 Applicability.

(a) The procedures prescribed herein shall, except as noted in §§ 136.4, 136.5, and 136.6, be used to perform the measurements indicated whenever the waste constituent specified is required to be measured for:

(1) An application submitted to the Director and/or reports required to be submitted under NPDES permits or other requests for quantitative or qualitative effluent data under parts 122 through 125 of this chapter; and

(2) Reports required to be submitted by dischargers under the NPDES established by parts 124 and 125 of this chapter; and

(3) Certifications issued by States pursuant to section 401 of the Clean Water Act (CWA), as amended.

(b) The procedure prescribed herein and in part 503 of title 40 shall be used to perform the measurements required for an application submitted to the Administrator or to a State for a sewage sludge permit under section 405(f) of the Clean Water Act and for recordkeeping and reporting requirements under part 503 of title 40.

(c) For the purposes of the NPDES program, when more than one test procedure is approved under this part for the analysis of a pollutant or pollutant parameter, the test procedure must be sufficiently sensitive as defined at 40 CFR 122.21(e)(3) and 122.44(i)(1)(iv).

[72 FR 14224, Mar. 26, 2007, as amended at 77 FR 29771, May 18, 2012; 79 FR 49013, Aug. 19, 2014; 82 FR 40846, Aug. 28, 2017]

§ 136.2 Definitions.

As used in this part, the term:

(a) *Act* means the Clean Water Act of 1977, Pub. L. 95–217, 91 Stat. 1566, *et seq.* (33 U.S.C. 1251 *et seq.*) (The Federal Water Pollution Control Act Amendments of 1972 as amended by the Clean Water Act of 1977).

(b) *Administrator* means the Administrator of the U.S. Environmental Protection Agency.

(c) *Regional Administrator* means one of the EPA Regional Administrators.

(d) *Director* means the director as defined in 40 CFR 122.2.

(e) *National Pollutant Discharge Elimination System (NPDES)* means the national system for the issuance of permits under section 402 of the Act and includes any State or interstate program which has been approved by the Administrator, in whole or in part, pursuant to section 402 of the Act.

(f) *Detection limit* means the minimum concentration of an analyte (substance) that can be measured and reported with a 99% confidence that the analyte concentration is distinguishable from the method blank results as determined by the procedure set forth at appendix B of this part.

[38 FR 28758, Oct. 16, 1973, as amended at 49 FR 43250, Oct. 26, 1984; 82 FR 40846, Aug. 28, 2017]

§ 136.3 Identification of test procedures.

(a) Parameters or pollutants, for which methods are approved, are listed together with test procedure descriptions and references in Tables IA, IB, IC, ID, IE, IF, IG, and IH of this section. The methods listed in Tables IA, IB, IC, ID, IE, IF, IG, and IH are incorporated by reference, see paragraph (b) of this section, with the exception of EPA Methods 200.7, 601–613, 624.1, 625.1, 1613, 1624, and 1625. The full texts of Methods 601–613, 624.1, 625.1, 1613, 1624, and 1625 are printed in appendix A of this part, and the full text of Method 200.7 is printed in appendix C of this part. The full text for determining the method detection limit when using the test procedures is given in appendix B of this part. In the event of a conflict between the reporting requirements of 40 CFR parts 122 and 125 and any reporting requirements associated with the methods listed in these tables, the provisions of 40 CFR parts 122 and 125 are controlling and will determine a permittee's reporting requirements. The full texts of the referenced test procedures are incorporated by reference into Tables IA, IB, IC, ID, IE, IF, IG, and IH. The year after the method number indicates the latest editorial change of the method. The discharge parameter values for which reports are required must be determined by one of the standard analytical test procedures incorporated by reference and described in Tables IA, IB, IC, ID, IE, IF, IG, and IH or by any alternate test procedure which has been approved by the Administrator under the provisions of paragraph (d) of this section and §§ 136.4 and 136.5. Under certain circumstances (paragraph (c) of this section, in § 136.5(a) through (d) or 40 CFR 401.13) other additional or alternate test procedures may be used.

TABLE IA—LIST OF APPROVED BIOLOGICAL METHODS FOR WASTEWATER AND SEWAGE SLUDGE

Parameter and units	Method [1]	EPA	Standard methods	AOAC, ASTM, USGS	Other
Bacteria					
1. Coliform (fecal), number per 100 mL or number per gram dry weight.	Most Probable Number (MPN), 5 tube, 3 dilution, or.	p. 132,[3] 1680,[11 15] 1681 [11 20].	9221 C E–2006.		
	Multiple tube/multiple well, or.	.....	.....	.....	Colilert-18®[13 18 21 29].
	Membrane filter (MF) [2], single step.	p. 124 [3]	9222 D–2006 [30]	B–0050–85 [4].	
2. Coliform (fecal) in presence of chlorine, number per 100 mL.	MPN, 5 tube, 3 dilution, or.	p. 132 [3]	9221 C E–2006.		
	MF [2], single step [5]	p. 124 [3]	9222 D–2006 [30].		
3. Coliform (total), number per 100 mL	MPN, 5 tube, 3 dilution, or.	p. 114 [3]	9221 B–2006.		
	MF [2], single step or two step.	p. 108 [3]	9222 B–2006	B–0025–85 [4].	
4. Coliform (total), in presence of chlorine, number per 100 mL.	MPN, 5 tube, 3 dilution, or.	p. 114 [3]	9221 B–2006.		
	MF [2] with enrichment [5].	p. 111 [3]	9222 B–2006.		
5. *E. coli,* number per 100 mL [21]	MPN [6 8 16] multiple tube, or.	.....	9221B.2–2006/ 9221F–2006 [12 14].		
	multiple tube/multiple well, or.	.....	9223 B–2004 [13]	991.15 [10]	Colilert® [13 18]. Colilert-18® [13 17 18]
	MF [2 6 7 8] single step	1603 [22]	.....	.....	mColiBlue-24®[19].
6. Fecal streptococci, number per 100 mL	MPN, 5 tube, 3 dilution, or.	p. 139 [3]	9230 B–2007.		
	MF [2], or	p. 136 [3]	9230 C–2007	B–0055–85 [4].	
	Plate count	p. 143 [3].			
7. Enterococci, number per 100 mL [21]	MPN, 5 tube, 3 dilution, or.	p. 139 [3]	9230 B–2007.		
	MPN [6 8], multiple tube/multiple well, or.	.....	9230 D–2007	D6503–99 [9]	Enterolert® [13 24].
	MF [2 6 7 8] single step or.	1600 [25]	9230 C–2007.		
	Plate count	p. 143 [3].			

TABLE IA—LIST OF APPROVED BIOLOGICAL METHODS FOR WASTEWATER AND SEWAGE SLUDGE—Continued

Parameter and units	Method [1]	EPA	Standard methods	AOAC, ASTM, USGS	Other
8. *Salmonella* number per gram dry weight [11].	MPN multiple tube ...	1682 [23].			
Aquatic Toxicity					
9. Toxicity, acute, fresh water organisms, LC_{50}, percent effluent.	*Ceriodaphnia dubia* acute.	2002.0 [26].			
	Daphnia puplex and *Daphnia magna* acute.	2021.0 [26].			
	Fathead Minnow, *Pimephales promelas,* and Bannerfin shiner, *Cyprinella leedsi,* acute.	2000.0 [26].			
	Rainbow Trout, *Oncorhynchus mykiss,* and brook trout, *Salvelinus fontinalis,* acute.	2019.0 [26].			
10. Toxicity, acute, estuarine and marine organisms of the Atlantic Ocean and Gulf of Mexico, LC_{50}, percent effluent.	Mysid, *Mysidopsis bahia,* acute.	2007.0 [26].			
	Sheepshead Minnow, *Cyprinodon variegatus,* acute.	2004.0 [26].			
	Silverside, *Menidia beryllina, Menidia menidia,* and *Menidia peninsulae,* acute.	2006.0 [26].			
11. Toxicity, chronic, fresh water organisms, NOEC or IC_{25}, percent effluent.	Fathead minnow, *Pimephales promelas,* larval survival and growth.	1000.0 [27].			

	Fathead minnow, *Pimephales promelas,* embryo-larval survival and teratogenicity.	1001.0[27].			
	Daphnia, *Ceriodaphnia dubia,* survival and reproduction.	1002.0[27].			
	Green alga, *Selenastrum capricornutum,* growth.	1003.0[27].			
12. Toxicity, chronic, estuarine and marine organisms of the Atlantic Ocean and Gulf of Mexico, NOEC or IC_{25}, percent effluent.	Sheepshead minnow, *Cyprinodon variegatus,* larval survival and growth.	1004.0[28].			
	Sheepshead minnow, *Cyprinodon variegatus,* embryo-larval survival and teratogenicity.	1005.0[28].			
	Inland silverside, *Menidia beryllina,* larval survival and growth.	1006.0[28].			
	Mysid, *Mysidopsis bahia,* survival, growth, and fecundity.	1007.0[28].			
	Sea urchin, *Arbacia punctulata,* fertilization.	1008.0[28].			

Table IA notes:

[1] The method must be specified when results are reported.

[2] A 0.45-μm membrane filter (MF) or other pore size certified by the manufacturer to fully retain organisms to be cultivated and to be free of extractables which could interfere with their growth.

[3] Microbiological Methods for Monitoring the Environment, Water, and Wastes, EPA/600/8–78/017. 1978. U.S. EPA.

[4] U.S. Geological Survey Techniques of Water-Resource Investigations, Book 5, Laboratory Analysis, Chapter A4, Methods for Collection and Analysis of Aquatic Biological and Microbiological Samples. 1989. USGS.

[5] Because the MF technique usually yields low and variable recovery from chlorinated wastewaters, the Most Probable Number method will be required to resolve any controversies.

[6] Tests must be conducted to provide organism enumeration (density). Select the appropriate configuration of tubes/filtrations and dilutions/volumes to account for the quality, character, consistency, and anticipated organism density of the water sample.

[7] When the MF method has been used previously to test waters with high turbidity, large numbers of noncoliform bacteria, or samples that may contain organisms stressed by chlorine, a parallel test should be conducted with a multiple-tube technique to demonstrate applicability and comparability of results.

[8] To assess the comparability of results obtained with individual methods, it is suggested that side-by-side tests be conducted across seasons of the year with the water samples routinely tested in accordance with the most current Standard Methods for the Examination of Water and Wastewater or EPA alternate test procedure (ATP) guidelines.

[9] Annual Book of ASTM Standards-Water and Environmental Technology, Section 11.02. 2000, 1999, 1996. ASTM International.

[10] Official Methods of Analysis of AOAC International. 16th Edition, 4th Revision, 1998. AOAC International.

[11] Approved for enumeration of target organism in sewage sludge.

[12] The multiple-tube fermentation test is used in 9221B.2–2006. Lactose broth may be used in lieu of lauryl tryptose broth (LTB), if at least 25 parallel tests are conducted between this broth and LTB using the water samples normally tested, and this comparison demonstrates that the false-positive rate and false-negative rate for total coliform using lactose broth is less than 10 percent. No requirement exists to run the completed phase on 10 percent of all total coliform-positive tubes on a seasonal basis.

[13] These tests are collectively known as defined enzyme substrate tests, where, for example, a substrate is used to detect the enzyme β-glucuronidase produced by *E. coli.*

[14] After prior enrichment in a presumptive medium for total coliform using 9221B.2–2006, all presumptive tubes or bottles showing any amount of gas, growth or acidity within 48 h ± 3 h of incubation shall be submitted to 9221F–2006. Commercially available EC–MUG media or EC media supplemented in the laboratory with 50 μg/mL of MUG may be used.

[15] Method 1680: Fecal Coliforms in Sewage Sludge (Biosolids) by Multiple-Tube Fermentation Using Lauryl-Tryptose Broth (LTB) and EC Medium, EPA–821–R–14–009. September 2014. U.S. EPA.

[16] Samples shall be enumerated by the multiple-tube or multiple-well procedure. Using multiple-tube procedures, employ an appropriate tube and dilution configuration of the sample as needed and report the Most Probable Number (MPN). Samples tested with Colilert® may be enumerated with the multiple-well procedures, Quanti-Tray® and the MPN calculated from the table provided by the manufacturer.

[17] Colilert-18® is an optimized formulation of the Colilert® for the determination of total coliforms and *E. coli* that provides results within 18 h of incubation at 35 °C rather than the 24 h required for the Colilert® test and is recommended for marine water samples.

[18] Descriptions of the Colilert®, Colilert-18®, and Quanti-Tray® may be obtained from IDEXX Laboratories, Inc.

[19] A description of the mColiBlue24® test, is available from Hach Company.

[20] Method 1681: Fecal Coliforms in Sewage Sludge (Biosolids) by Multiple-Tube Fermentation using A–1 Medium, EPA–821–R–06–013. July 2006. U.S. EPA.

[21] Approved for enumeration of target organism in wastewater effluent.

[22] Method 1603: *Escherichia coli* (*E. coli*) in Water by Membrane Filtration Using Modified membrane-Thermotolerant *Escherichia coli* Agar (modified mTEC), EPA–821–R–14–010. September 2014. U.S. EPA.

[23] Method 1682: *Salmonella* in Sewage Sludge (Biosolids) by Modified Semisolid Rappaport-Vassiliadis (MSRV) Medium, EPA–821–R–14–012. September 2014. U.S. EPA.

[24] A description of the Enterolert® test may be obtained from IDEXX Laboratories Inc.

[25] Method 1600: Enterococci in Water by Membrane Filtration Using membrane-Enterococcus Indoxyl-β-D-Glucoside Agar (mEI), EPA–821–R–14–011. September 2014. U.S. EPA.

[26] Methods for Measuring the Acute Toxicity of Effluents and Receiving Waters to Freshwater and Marine Organisms, EPA–821–R–02–012. Fifth Edition, October 2002. U.S. EPA.

[27] Short-term Methods for Estimating the Chronic Toxicity of Effluents and Receiving Waters to Freshwater Organisms, EPA–821–R–02–013. Fourth Edition, October 2002. U.S. EPA.

[28] Short-term Methods for Estimating the Chronic Toxicity of Effluents and Receiving Waters to Marine and Estuarine Organisms, EPA–821–R–02–014. Third Edition, October 2002. U.S. EPA.

[29] To use Colilert-18® to assay for fecal coliforms, the incubation temperature is 44.5 ± 0.2 °C, and a water bath incubator is used.

[30] On a monthly basis, at least ten blue colonies from the medium must be verified using Lauryl Tryptose Broth and EC broth, followed by count adjustment based on these results; and representative non-blue colonies should be verified using Lauryl Tryptose Broth. Where possible, verifications should be done from randomized sample sources.

TABLE IB—LIST OF APPROVED INORGANIC TEST PROCEDURES

Parameter	Methodology [58]	EPA [52]	Standard methods	ASTM	USGS/AOAC/other
1. Acidity, as $CaCO_3$, mg/L.	Electrometric endpoint or phenolphthalein endpoint.	.....	2310 B–2011 ...	D1067–11	I–1020–85.[2]
2. Alkalinity, as $CaCO_3$, mg/L.	Electrometric or Colorimetric titration to pH 4.5, Manual.	.....	2320 B–2011 ...	D1067–11	973.43,[3] I–1030–85.[2]
	Automatic	310.2 (Rev. 1974) [1].	.....	.....	I–2030–85.[2]
3. Aluminum—Total,[4] mg/L.	Digestion,[4] followed by any of the following:				
	AA direct aspiration [36].	.....	3111 D–2011 or 3111 E–2011.	.....	I–3051–85.[2]
	AA furnace	.....	3113 B–2010.		
	STGFAA	200.9, Rev. 2.2 (1994).			
	ICP/AES [36]	200.5, Rev 4.2 (2003); [68] 200.7, Rev. 4.4 (1994).	3120 B–2011 ...	D1976–12	I–4471–97.[50]
	ICP/MS	200.8, Rev. 5.4 (1994).	3125 B–2011 ...	D5673–10	993.14,[3] I–4471–97.[50]
	Direct Current Plasma (DCP) [36].	.....	.....	D4190–08	See footnote.[34]
	Colorimetric (Eriochrome cyanine R).	.....	3500-Al B–2011.		
4. Ammonia (as N), mg/L.	Manual distillation [6] or gas diffusion (pH > 11), followed by any of the following:.	350.1, Rev. 2.0 (1993).	4500–NH_3 B–2011.	.....	973.49.[3]
	Nesslerization ..	.....	.....	D1426–08 (A) ..	973.49,[3] I–3520–85.[2]
	Titration	.....	4500–NH_3 C–2011.		
	Electrode	.....	4500–NH_3 D–2011 or E–2011.	D1426–08 (B).	
	Manual phenate, salicylate, or other substituted phenols in Berthelot reaction based methods.	.....	4500–NH_3 F-2011.	.....	See footnote.[60]

TABLE IB—LIST OF APPROVED INORGANIC TEST PROCEDURES—Continued

Parameter	Methodology [58]	EPA [52]	Standard methods	ASTM	USGS/AOAC/other
	Automated phenate, salicylate, or other substituted phenols in Berthelot reaction based methods.	350.1,[30] Rev. 2.0 (1993).	4500–NH_3 G-2011, 4500–NH_3 H-2011.	.....	I–4523–85.[2]
	Automated electrode.	.....	.....	.....	See footnote.[7]
	Ion Chromatography.	.....	.....	D6919–09.	
	Automated gas diffusion, followed by conductivity cell analysis.	.....	.....	.....	Timberline Ammonia-001.[74]
5. Antimony—Total,[4] mg/L.	Digestion,[4] followed by any of the following:				
	AA direct aspiration [36].	.....	3111 B–2011.		
	AA furnace	.....	3113 B–2010.		
	STGFAA	200.9, Rev. 2.2 (1994).			
	ICP/AES [36]	200.5, Rev 4.2 (2003); [68] 200.7, Rev. 4.4 (1994).	3120 B–2011 ...	D1976–12	I–4471–97.[50]
	ICP/MS	200.8, Rev. 5.4 (1994).	3125 B–2011 ...	D5673–10	993.14,[3] I–4471–97.[50]
6. Arsenic-Total,[4] mg/L.	Digestion,[4] followed by any of the following:.	206.5 (Issued 1978) [1].			
	AA gaseous hydride.	.....	3114 B–2011 or 3114 C–2011.	D2972–08 (B) ..	I–3062–85.[2]
	AA furnace	.....	3113 B–2010 ...	D2972–08 (C) ..	I–4063–98.[49]
	STGFAA	200.9, Rev. 2.2 (1994).			
	ICP/AES [36]	200.5, Rev 4.2 (2003); [68] 200.7, Rev. 4.4 (1994).	3120 B–2011 ...	D1976–12.	
	ICP/MS	200.8, Rev. 5.4 (1994).	3125 B–2011 ...	D5673–10	993.14,[3] I–4020–05.[70]
	Colorimetric (SDDC).	.....	3500-As B–2011.	D2972–08 (A) ..	I–3060–85.[2]
7. Barium—Total,[4] mg/L.	Digestion,[4] followed by any of the following:				
	AA direct aspiration [36].	.....	3111 D–2011 ...	.....	I–3084–85.[2]
	AA furnace	.....	3113 B–2010 ...	D4382–12.	
	ICP/AES [36]	200.5, Rev 4.2 (2003); [68] 200.7, Rev. 4.4 (1994).	3120 B–2011 ...	.....	I–4471–97.[50]

TABLE IB—LIST OF APPROVED INORGANIC TEST PROCEDURES—Continued

Parameter	Methodology [58]	EPA [52]	Standard methods	ASTM	USGS/AOAC/other
	ICP/MS	200.8, Rev. 5.4 (1994).	3125 B–2011	D5673–10	993.14,[3] I–4471–97.[50]
	DCP [36]				See footnote.[34]
8. Beryllium—Total,[4] mg/L.	Digestion,[4] followed by any of the following:.				
	AA direct aspiration.		3111 D–2011 or 3111 E–2011.	D3645–08 (A)	I–3095–85.[2]
	AA furnace		3113 B–2010	D3645–08 (B).	
	STGFAA	200.9, Rev. 2.2 (1994).			
	ICP/AES	200.5, Rev 4.2 (2003); [68] 200.7, Rev. 4.4 (1994).	3120 B–2011	D1976–12	I–4471–97.[50]
	ICP/MS	200.8, Rev. 5.4 (1994).	3125 B–2011	D5673–10	993.14,[3] I–4471–97.[50]
	DCP			D4190–08	See footnote.[34]
	Colorimetric (aluminon).		See footnote.[61]		
9. Biochemical oxygen demand (BOD_5), mg/L.	Dissolved Oxygen Depletion.		5210 B–2011		973.44,[3] p. 17,[9] I–1578–78,[8] See footnote.[10 63]
10. Boron—Total,[37] mg/L.	Colorimetric (curcumin).		4500–B B–2011		I–3112–85.[2]
	ICP/AES	200.5, Rev 4.2 (2003); [68] 200.7, Rev. 4.4 (1994).	3120 B–2011	D1976–12	I–4471–97.[50]
	ICP/MS	200.8, Rev. 5.4 (1994).	3125 B–2011	D5673–10	993.14,[3] I–4471–97.[50]
	DCP			D4190–08	See footnote.[34]
11. Bromide, mg/L.	Electrode			D1246–10	I–1125–85.[2]
	Ion Chromatography.	300.0, Rev 2.1 (1993) and 300.1, Rev 1.0 (1997).	4110 B–2011, C–2011, D–2011.	D4327–03	993.30.[3]
	CIE/UV		4140 B–2011	D6508–10	D6508, Rev. 2.[54]
12. Cadmium—Total,[4] mg/L.	Digestion,[4] followed by any of the following:				
	AA direct aspiration [36].		3111 B–2011 or 3111 C–2011.	D3557–12 (A or B).	974.27,[3] p. 37,[9] I–3135–85[2] or I–3136–85.[2]
	AA furnace		3113 B–2010	D3557–12 (D)	I–4138–89.[51]
	STGFAA	200.9, Rev. 2.2 (1994).			
	ICP/AES [36]	200.5, Rev 4.2 (2003); [68] 200.7, Rev. 4.4 (1994).	3120 B–2011	D1976–12	I–1472–85 [2] or I–4471–97.[50]
	ICP/MS	200.8, Rev. 5.4 (1994).	3125 B–2011	D5673–10	993.14,[3] I–4471–97.[50]
	DCP [36]			D4190–08	See footnote.[34]
	Voltametry [11]			D3557–12 (C).	

TABLE IB—LIST OF APPROVED INORGANIC TEST PROCEDURES—Continued

Parameter	Methodology [58]	EPA [52]	Standard methods	ASTM	USGS/AOAC/other
	Colorimetric (Dithizone).	.....	3500-Cd-D-1990.		
13. Calcium—Total,[4] mg/L.	Digestion,[4] followed by any of the following:				
	AA direct aspiration.	.....	3111 B–2011 ...	D511–09(B)	I–3152–85.[2]
	ICP/AES	200.5, Rev 4.2 (2003);[68] 200.7, Rev. 4.4 (1994).	3120 B–2011 ...	.....	I–4471–97.[50]
	ICP/MS	200.8, Rev. 5.4 (1994).	3125 B–2011 ...	D5673–10	993.14.[3]
	DCP	.....	.....	.....	See footnote.[34]
	Titrimetric (EDTA).	.....	3500-Ca B–2011.	D511–09 (A).	
	Ion Chromatography.	.....	.....	D6919–09.	
14. Carbonaceous biochemical oxygen demand ($CBOD_5$), mg/L [12].	Dissolved Oxygen Depletion with nitrification inhibitor.	.....	5210 B–2011 ...	.....	See footnote.[35 63]
15. Chemical oxygen demand (COD), mg/L.	Titrimetric	410.3 (Rev. 1978) [1].	5220 B–2011 or C–2011.	D1252–06 (A) ..	973.46,[3] p. 17,[9] I–3560–85.[2]
	Spectrophotometric, manual or automatic.	410.4, Rev. 2.0 (1993).	5220 D–2011 ...	D1252–06 (B) ..	See footnotes.[13 14], I–3561–85.[2]
16. Chloride, mg/L.	Titrimetric: (silver nitrate).	.....	4500–Cl^- B–2011.	D512–04 (B)	I–1183–85.[2]
	(Mercuric nitrate).	.....	4500–Cl^- C–2011.	D512–04 (A)	973.51,[3] I–1184–85.[2]
	Colorimetric: Manual.	.....	.....	.....	I–1187–85.[2]
	Automated (ferricyanide).	.....	4500–Cl^- E–2011.	.....	I–2187–85.[2]
	Potentiometric Titration.	.....	4500–Cl^- D–2011.		
	Ion Selective Electrode.	.....	.....	D512–04 (C).	
	Ion Chromatography.	300.0, Rev 2.1 (1993) and 300.1, Rev 1.0 (1997).	4110 B–2011 or 4110 C–2011.	D4327–03	993.30,[3] I–2057–90.[51]
	CIE/UV	.....	4140 B–2011 ...	D6508–10	D6508, Rev. 2.[54]
17. Chlorine-Total residual, mg/L.	Amperometric direct.	.....	4500–Cl D–2011.	D1253–08.	
	Amperometric direct (low level).	.....	4500–Cl E–2011.		
	Iodometric direct.	.....	4500–Cl B–2011.		
	Back titration ether endpoint [15].	.....	4500–Cl C–2011.		
	DPD–FAS	.....	4500–Cl F-2011.		

TABLE IB—LIST OF APPROVED INORGANIC TEST PROCEDURES—Continued

Parameter	Methodology [58]	EPA [52]	Standard methods	ASTM	USGS/AOAC/other
	Spectrophotometric, DPD.	.....	4500–Cl G-2011.		
	Electrode	.....	.....	.....	See footnote.[16]
17A. Chlorine-Free Available, mg/L.	Amperometric direct.	.....	4500–Cl D–2011.	D1253–08.	
	Amperometric direct (low level).	.....	4500–Cl E–2011.		
	DPD–FAS	.....	4500–Cl F-2011.		
	Spectrophotometric, DPD.	.....	4500–Cl G-2011.		
18. Chromium VI dissolved, mg/L.	0.45-micron filtration followed by any of the following:				
	AA chelation-extraction.	.....	3111 C–2011 ...	.....	I–1232–85.[2]
	Ion Chromatography.	218.6, Rev. 3.3 (1994).	3500-Cr C–2011.	D5257–11	993.23.[3]
	Colorimetric (diphenylcarbazide).	.....	3500-Cr B–2011.	D1687–12 (A) ..	I–1230–85.[2]
19. Chromium—Total,[4] mg/L.	Digestion,[4] followed by any of the following:				
	AA direct aspiration [36].	.....	3111 B–2011 ...	D1687–12 (B) ..	974.27,[3] I–3236–85.[2]
	AA chelation-extraction.	.....	3111 C–2011.		
	AA furnace	.....	3113 B–2010 ...	D1687–12 (C) ..	I–3233–93.[46]
	STGFAA	200.9, Rev. 2.2 (1994).			
	ICP/AES [36]	200.5, Rev 4.2 (2003),[68] 200.7, Rev. 4.4 (1994).	3120 B–2011 ...	D1976–12	I–4471–97.[50]
	ICP/MS	200.8, Rev. 5.4 (1994).	3125 B–2011 ...	D5673–10	993.14,[3] I–4020–05.[70]
	DCP [36]	.....	.....	D4190–08	See footnote.[34]
	Colorimetric (diphenylcarbazide).	.....	3500-Cr B–2011.		
20. Cobalt—Total,[4] mg/L.	Digestion,[4] followed by any of the following:				
	AA direct aspiration.	.....	3111 B–2011 or 3111 C–2011.	D3558–08 (A or B).	p. 37,[9] I–3239–85.[2]
	AA furnace	.....	3113 B–2010 ...	D3558–08 (C) ..	I–4243–89.[51]
	STGFAA	200.9, Rev. 2.2 (1994).			
	ICP/AES [36]	200.7, Rev. 4.4 (1994).	3120 B–2011 ...	D1976–12	I–4471–97.[50]
	ICP/MS	200.8, Rev. 5.4 (1994).	3125 B–2011 ...	D5673–10	993.14,[3] I–4020–05.[70]
	DCP	.....	.....	D4190–08	See footnote.[34]

TABLE IB—LIST OF APPROVED INORGANIC TEST PROCEDURES—Continued

Parameter	Methodology [58]	EPA [52]	Standard methods	ASTM	USGS/AOAC/other
21. Color, platinum cobalt units or dominant wavelength, hue, luminance purity.	Colorimetric (ADMI).	.....	2120 F-2011 [78].		
	Platinum cobalt visual comparison.	.....	2120 B–2011 ...	.....	I–1250–85.[2]
	Spectrophotometric.	.....	.....	.....	See footnote.[18]
22. Copper—Total,[4] mg/L.	Digestion,[4] followed by any of the following:				
	AA direct aspiration [36].	.....	3111 B–2011 or 3111 C–2011.	D1688–12 (A or B).	974.27,[3] p. 37,[9] I–3270–85[2] or I–3271–85.[2]
	AA furnace	.....	3113 B–2010 ...	D1688–12 (C) ..	I–4274–89.[51]
	STGFAA	200.9, Rev. 2.2 (1994).			
	ICP/AES [36]	200.5, Rev 4.2 (2003); [68] 200.7, Rev. 4.4 (1994).	3120 B–2011 ...	D1976–12	I–4471–97.[50]
	ICP/MS	200.8, Rev. 5.4 (1994).	3125 B–2011 ...	D5673–10	993.14,[3] I–4020–05.[70]
	DCP [36]	.....	.....	D4190–08	See footnote.[34]
	Colorimetric (Neocuproine).	.....	3500-Cu B–2011.		
	Colorimetric (Bathocuproine).	.....	3500-Cu C–2011.	.....	See footnote.[19]
23. Cyanide—Total, mg/L.	Automated UV digestion/distillation and Colorimetry.	.....	.....	.....	Kelada-01.[55]
	Segmented Flow Injection, In-Line Ultraviolet Digestion, followed by gas diffusion amperometry.	.....	.....	D7511–12.	
	Manual distillation with $MgCl_2$, followed by any of the following:.	335.4, Rev. 1.0 (1993) [57].	4500–CN^- B–2011 and C–2011.	D2036–09(A), D7284–13.	10–204–00–1–X.[56]
	Flow Injection, gas diffusion amperometry.	.....	.....	D2036–09(A) D7284–13.	
	Titrimetric	.....	4500–CN^- D–2011.	D2036–09(A) ...	p. 22.[9]
	Spectrophotometric, manual.	.....	4500–CN^- E–2011.	D2036–09(A) ...	I–3300–85.[2]

TABLE IB—LIST OF APPROVED INORGANIC TEST PROCEDURES—Continued

Parameter	Methodology [58]	EPA [52]	Standard methods	ASTM	USGS/AOAC/other
	Semi-Automated [20].	335.4, Rev. 1.0 (1993) [57].	.....	.....	10–204–00–1–X,[56] I–4302–85.[2]
	Ion Chromatography.	.....	.....	D2036–09(A).	
	Ion Selective Electrode.	.....	4500–CN⁻ F-2011.	D2036–09(A).	
24. Cyanide—Available, mg/L.	Cyanide Amenable to Chlorination (CATC); Manual distillation with $MgCl_2$, followed by Titrimetric or Spectrophotometric.	.....	4500–CN⁻ G-2011.	D2036–09(B).	
	Flow injection and ligand exchange, followed by gas diffusion amperometry [59].	.....	.....	D6888–09	OIA–1677–09.[44]
	Automated Distillation and Colorimetry (no UV digestion).	.....	.....	.....	Kelada-01.[55]
24.A Cyanide—Free, mg/L.	Flow Injection, followed by gas diffusion amperometry.	.....	.....	D7237–10	OIA–1677–09.[44]
	Manual microdiffusion and colorimetry.	.....	.....	D4282–02.	
25. Fluoride—Total, mg/L.	Manual distillation,[6] followed by any of the following:	.....	4500–F⁻ B–2011.		
	Electrode, manual.	.....	4500–F⁻ C–2011.	D1179–10 (B).	
	Electrode, automated.	.....	.....	.....	I–4327–85.[2]
	Colorimetric, (SPADNS).	.....	4500–F⁻ D–2011.	D1179–10 (A).	
	Automated complexone.	.....	4500–F⁻ E–2011.		
	Ion Chromatography.	300.0, Rev 2.1 (1993) and 300.1, Rev 1.0 (1997).	4110 B–2011 or C–2011.	D4327–03	993.30.[3]
	CIE/UV	.....	4140 B–2011 ...	D6508–10	D6508, Rev. 2.[54]
26. Gold—Total,[4] mg/L.	Digestion,[4] followed by any of the following:				
	AA direct aspiration.	.....	3111 B–2011.		
	AA furnace	231.2 (Issued 1978) [1].	3113 B–2010.		

TABLE IB—LIST OF APPROVED INORGANIC TEST PROCEDURES—Continued

Parameter	Methodology [58]	EPA [52]	Standard methods	ASTM	USGS/AOAC/other
	ICP/MS	200.8, Rev. 5.4 (1994).	3125 B–2011	D5673–10	993.14.[3]
	DCP				See footnote.[34]
27. Hardness—Total, as $CaCO_3$, mg/L.	Automated colorimetric.	130.1 (Issued 1971) [1].			
	Titrimetric (EDTA).		2340 C–2011	D1126–12	973.52B,[3] I–1338–85.[2]
	Ca plus Mg as their carbonates, by any approved method for Ca and Mg (See Parameters 13 and 33), provided that the sum of the lowest point of quantitation for Ca and Mg is below the NPDES permit requirement for Hardness..		2340 B–2011.		
28. Hydrogen ion (pH), pH units.	Electrometric measurement.		4500–H+ B–2011.	D1293–99 (A or B).	973.41,[3] I–1586–85.[2]
	Automated electrode.	150.2 (Dec. 1982) [1].			See footnote,[21] I–2587–85.[2]
29. Iridium—Total,[4] mg/L.	Digestion,[4] followed by any of the following:				
	AA direct aspiration.		3111 B–2011.		
	AA furnace	235.2 (Issued 1978) [1].			
	ICP/MS		3125 B–2011.		
30. Iron—Total,[4] mg/L.	Digestion,[4] followed by any of the following:				
	AA direct aspiration [36].		3111 B–2011 or 3111 C–2011.	D1068–10 (A)	974.27,[3] I–3381–85.[2]
	AA furnace		3113 B–2010	D1068–10 (B).	
	STGFAA	200.9, Rev. 2.2 (1994).			
	ICP/AES [36]	200.5, Rev. 4.2 (2003); [68] 200.7, Rev. 4.4 (1994).	3120 B–2011	D1976–12	I–4471–97.[50]
	ICP/MS	200.8, Rev. 5.4 (1994).	3125 B–2011	D5673–10	993.14.[3]
	DCP [36]			D4190–08	See footnote.[34]
	Colorimetric (Phenanthroline).		3500-Fe B–2011.	D1068–10 (C)	See footnote.[22]

TABLE IB—LIST OF APPROVED INORGANIC TEST PROCEDURES—Continued

Parameter	Methodology [58]	EPA [52]	Standard methods	ASTM	USGS/AOAC/other
31. Kjeldahl Nitrogen [5]—Total, (as N), mg/L.	Manual digestion [20] and distillation or gas diffusion, followed by any of the following:.	.....	4500–N_{org} B–2011 or C–2011 and 4500–NH_3 B–2011.	D3590–11 (A) ..	I–4515–91.[45]
	Titration	.....	4500–NH_3 C–2011.	.....	973.48.[3]
	Nesslerization ..	.....	.....	D1426–08 (A).	
	Electrode	.....	4500–NH_3 D–2011 or E–2011.	D1426–08 (B).	
	Semi-automated phenate.	350.1, Rev. 2.0 (1993).	4500–NH_3 G-2011 4500–NH_3 H-2011.		
	Manual phenate, salicylate, or other substituted phenols in Berthelot reaction based methods.	.....	4500–NH_3 F-2011.	.....	See footnote.[60]
	Automated gas diffusion, followed by conductivity cell analysis.	.....	.....	.....	Timberline Ammonia-001.[74]
	Automated Methods for TKN that do not require manual distillation.				
	Automated phenate, salicylate, or other substituted phenols in Berthelot reaction based methods colorimetric (auto digestion and distillation).	351.1 (Rev. 1978) [1].	.....	.....	I–4551–78.[8]
	Semi-automated block digestor colorimetric (distillation not required).	351.2, Rev. 2.0 (1993).	4500–N_{org} D–2011.	D3590–11 (B) ..	I–4515–91.[45]
	Block digester, followed by Auto distillation and Titration.	.....	.....	.....	See footnote.[39]
	Block digester, followed by Auto distillation and Nesslerization.	.....	.....	.....	See footnote.[40]

TABLE IB—LIST OF APPROVED INORGANIC TEST PROCEDURES—Continued

Parameter	Methodology [58]	EPA [52]	Standard methods	ASTM	USGS/AOAC/other
	Block Digester, followed by Flow injection gas diffusion (distillation not required).	.....	.....	.....	See footnote.[41]
	Digestion with peroxdisulfate, followed by Spectrophotometric (2,6-dimethyl phenol).	.....	.....	.....	Hach 10242.[76]
	Digestion with persulfate, followed by Colorimetric.	.....	.....	.....	NCASI TNTP W10900.[77]
32. Lead—Total,[4] mg/L.	Digestion,[4] followed by any of the following:				
	AA direct aspiration [36].	.....	3111 B–2011 or 3111 C–2011.	D3559–08 (A or B).	974.27,[3] I–3399–85.[2]
	AA furnace	.....	3113 B–2010 ...	D3559–08 (D) ..	I–4403–89.[51]
	STGFAA	200.9, Rev. 2.2 (1994).			
	ICP/AES [36]	200.5, Rev. 4.2 (2003); [68] 200.7, Rev. 4.4 (1994).	3120 B–2011 ...	D1976–12	I–4471–97.[50]
	ICP/MS	200.8, Rev. 5.4 (1994).	3125 B–2011 ...	D5673–10	993.14,[3] I–4471–97.[50]
	DCP [36]	.....	.....	D4190–08	See footnote.[34]
	Voltametry [11]	.....	.....	D3559–08 (C).	
	Colorimetric (Dithizone).	.....	3500-Pb B–2011.		
33. Magnesium—Total,[4] mg/L.	Digestion,[4] followed by any of the following:				
	AA direct aspiration.	.....	3111 B–2011 ...	D511–09 (B)	974.27,[3] I–3447–85.[2]
	ICP/AES	200.5, Rev. 4.2 (2003); [68] 200.7, Rev. 4.4 (1994).	3120 B–2011 ...	D1976–12	I–4471–97.[50]
	ICP/MS	200.8, Rev. 5.4 (1994).	3125 B–2011 ...	D5673–10	993.14.[3]
	DCP	.....	.....	.....	See footnote.[34]
.....	Ion Chromatography.	.....	.....	D6919–09.	
34. Manganese—Total,[4] mg/L.	Digestion,[4] followed by any of the following:				
	AA direct aspiration [36].	.....	3111 B–2011 ...	D858–12 (A or B).	974.27,[3] I–3454–85.[2]
	AA furnace	.....	3113 B–2010 ...	D858–12 (C).	
	STGFAA	200.9, Rev. 2.2 (1994).			

TABLE IB—LIST OF APPROVED INORGANIC TEST PROCEDURES—Continued

Parameter	Methodology [58]	EPA [52]	Standard methods	ASTM	USGS/AOAC/other
	ICP/AES [36]	200.5, Rev. 4.2 (2003); [68] 200.7, Rev. 4.4 (1994).	3120 B–2011	D1976–12	I–4471–97.[50]
	ICP/MS	200.8, Rev. 5.4 (1994).	3125 B–2011	D5673–10	993.14,[3] I–4471–97.[50]
	DCP [36]			D4190–08	See footnote.[34]
	Colorimetric (Persulfate).		3500-Mn B–2011.		920.203.[3]
	Colorimetric (Periodate).				See footnote.[23]
35. Mercury—Total,[4] mg/L.	Cold vapor, Manual.	245.1, Rev. 3.0 (1994).	3112 B–2011	D3223–12	977.22,[3] I–3462–85.[2]
	Cold vapor, Automated.	245.2 (Issued 1974) [1].			
	Cold vapor atomic fluorescence spectrometry (CVAFS).	245.7 Rev. 2.0 (2005) [17].			I–4464–01.[71]
	Purge and Trap CVAFS.	1631E [43].			
36. Molybdenum—Total,[4] mg/L.	Digestion,[4] followed by any of the following:				
	AA direct aspiration.		3111 D–2011		I–3490–85.[2]
	AA furnace		3113 B–2010		I–3492–96.[47]
	ICP/AES [36]	200.7, Rev. 4.4 (1994).	3120 B–2011	D1976–12	I–4471–97.[50]
	ICP/MS	200.8, Rev. 5.4 (1994).	3125 B–2011	D5673–10	993.14,[3] I–4471–97.[50]
	DCP				See footnote.[34]
37. Nickel—Total,[4] mg/L.	Digestion,[4] followed by any of the following:				
	AA direct aspiration [36].		3111 B–2011 or 3111 C–2011.	D1886–08 (A or B).	I–3499–85.[2]
	AA furnace		3113 B–2010	D1886–08 (C)	I–4503–89.[51]
	STGFAA	200.9, Rev. 2.2 (1994).			
	ICP/AES [36]	200.5, Rev. 4.2 (2003); [68] 200.7, Rev. 4.4 (1994).	3120 B–2011	D1976–12	I–4471–97.[50]
	ICP/MS	200.8, Rev. 5.4 (1994).	3125 B–2011	D5673–10	993.14,[3] I–4020–05.[70]
	DCP [36]			D4190–08	See footnote.[34]
38. Nitrate (as N), mg/L.	Ion Chromatography.	300.0, Rev. 2.1 (1993) and 300.1, Rev. 1.0 (1997).	4110 B–2011 or C–2011.	D4327–03	993.30.[3]
	CIE/UV		4140 B–2011	D6508–10	D6508, Rev. 2.[54]
	Ion Selective Electrode.		4500–NO_3^- D–2011.		
	Colorimetric (Brucine sulfate).	352.1 (Issued 1971) [1].			973.50,[3] 419D[1 7] p. 28.[9]

TABLE IB—LIST OF APPROVED INORGANIC TEST PROCEDURES—Continued

Parameter	Methodology [58]	EPA [52]	Standard methods	ASTM	USGS/AOAC/other
	Spectrophotometric (2,6-dimethylphenol).	.....	.....	.....	Hach 10206.[75]
	Nitrate-nitrite N minus Nitrite N (See parameters 39 and 40).				
39. Nitrate-nitrite (as N), mg/L.	Cadmium reduction, Manual.	.....	4500–NO_3^- E–2011.	D3867–04 (B).	
	Cadmium reduction, Automated.	353.2, Rev. 2.0 (1993).	4500–NO_3^- F-2011.	D3867–04 (A) ..	I–2545–90.[51]
	Automated hydrazine.	.....	4500–NO_3^- H-2011.		
	Reduction/Colorimetric.	.....	.....	.....	See footnote.[62]
	Ion Chromatography.	300.0, Rev. 2.1 (1993) and 300.1, Rev. 1.0 (1997).	4110 B–2011 or C–2011.	D4327–03	993.30.[3]
	CIE/UV	.....	4140 B–2011 ...	D6508–10	D6508, Rev. 2.[54]
	Enzymatic reduction, followed by automated colorimetric determination.	.....	.....	.....	I–2547–11,[72] I–2548–11,[72] N07–0003.[73]
	Spectrophotometric (2,6-dimethylphenol).	.....	.....	.....	Hach 10206.[75]
40. Nitrite (as N), mg/L.	Spectrophotometric: Manual.	.....	4500–NO_2^- B–2011.	.....	See footnote.[25]
	Automated (Diazotization).	.....	.....	.....	I–4540–85,[2] See footnote.[62]
	Automated (*bypass cadmium reduction).	353.2, Rev. 2.0 (1993).	4500–NO_3^- F–2011.	D3867–04 (A) ..	I–4545–85.[2]
	Manual (*bypass cadmium reduction).	.....	4500–NO_3^- E–2011.	D3867–04 (B).	
	Ion Chromatography.	300.0, Rev. 2.1 (1993) and 300.1, Rev. 1.0 (1997).	4110 B–2011 or C–2011.	D4327–03	993.30.[3]
	CIE/UV	.....	4140 B–2011 ...	D6508–10	D6508, Rev. 2.[54]
	Automated (*bypass Enzymatic reduction).	.....	.....	.....	I–2547–11,[72] I–2548–11,[72] N07–0003.[73]

TABLE IB—LIST OF APPROVED INORGANIC TEST PROCEDURES—Continued

Parameter	Methodology [58]	EPA [52]	Standard methods	ASTM	USGS/AOAC/other
41. Oil and grease—Total recoverable, mg/L.	Hexane extractable material (HEM): n-Hexane extraction and gravimetry.	1664 Rev. A; 1664 Rev. B [42].	5520 B–2011 [38].		
	Silica gel treated HEM (SGT–HEM): Silica gel treatment and gravimetry.	1664 Rev. A; 1664 Rev. B [42].	5520 B–2011 [38] and 5520 F-2011[38].		
42. Organic carbon—Total (TOC), mg/L.	Combustion	.....	5310 B–2011 ...	D7573–09	973.47,[3] p. 14.[24]
	Heated persulfate or UV persulfate oxidation.	.....	5310 C–2011, 5310 D–2011.	D4839–03	973.47,[3] p. 14.[24]
43. Organic nitrogen (as N), mg/L.	Total Kjeldahl N (Parameter 31) minus ammonia N (Parameter 4).				
44. Ortho-phosphate (as P), mg/L.	Ascorbic acid method:				
	Automated	365.1, Rev. 2.0 (1993).	4500–P F–2011 or G–2011.	.....	973.56,[3] I–4601–85.[2]
	Manual single reagent.	.....	4500–P E–2011	D515–88 (A)	973.55.[3]
	Manual two reagent.	365.3 (Issued 1978) [1].			
	Ion Chromatography.	300.0, Rev. 2.1 (1993) and 300.1, Rev. 1.0 (1997).	4110 B–2011 or C–2011.	D4327–03	993.30.[3]
	CIE/UV	.....	4140 B–2011 ...	D6508–10	D6508, Rev. 2.[54]
45. Osmium—Total,[4] mg/L.	Digestion,[4] followed by any of the following:				
	AA direct aspiration.	.....	3111 D–2011.		
	AA furnace	252.2 (Issued 1978) [1].			
46. Oxygen, dissolved, mg/L.	Winkler (Azide modification).	.....	4500–O (B–F)–2011.	D888–09 (A)	973.45B,[3] I–1575–78.[8]
	Electrode	.....	4500–O G–2011.	D888–09 (B)	I–1576–78.[8]
	Luminescence Based Sensor.	.....	.....	D888–09 (C)	See footnote.[63] See footnote.[64]
47. Palladium—Total,[4] mg/L.	Digestion,[4] followed by any of the following:				
	AA direct aspiration.	.....	3111 B–2011.		

TABLE IB—LIST OF APPROVED INORGANIC TEST PROCEDURES—Continued

Parameter	Methodology [58]	EPA [52]	Standard methods	ASTM	USGS/AOAC/other
	AA furnace	253.2 (Issued 1978) [1].			
	ICP/MS		3125 B–2011.		
	DCP				See footnote.[34]
48. Phenols, mg/L.	Manual distillation,[26] followed by any of the following:	420.1 (Rev. 1978) [1].	5530 B–2010	D1783–01.	
	Colorimetric (4AAP) manual.	420.1 (Rev. 1978) [1].	5530 D–2010 [27]	D1783–01 (A or B).	
	Automated colorimetric (4AAP).	420.4 Rev. 1.0 (1993).			
49. Phosphorus (elemental), mg/L.	Gas-liquid chromatography.				See footnote.[28]
50. Phosphorus—Total, mg/L.	Digestion,[20] followed by any of the following:		4500–P B(5)–2011.		973.55.[3]
	Manual	365.3 (Issued 1978) [1].	4500–P E–2011	D515–88 (A).	
	Automated ascorbic acid reduction.	365.1 Rev. 2.0 (1993).	4500–P (F-H)–2011.		973.56,[3] I–4600–85.[2]
	ICP/AES [4 36]	200.7, Rev. 4.4 (1994).	3120 B–2011		I–4471–97.[50]
	Semi-automated block digestor (TKP digestion).	365.4 (Issued 1974) [1].		D515–88 (B)	I–4610–91.[48]
	Digestion with persulfate, followed by Colorimetric.				NCASI TNTP W10900.[77]
51. Platinum—Total [4], mg/L.	Digestion,[4] followed by any of the following:				
	AA direct aspiration.		3111 B–2011.		
	AA furnace	255.2 (Issued 1978) [1].			
	ICP/MS		3125 B–2011.		
	DCP				See footnote.[34]
52. Potassium—Total [4], mg/L.	Digestion,[4] followed by any of the following:.				
	AA direct aspiration.		3111 B–2011		973.53,[3] I–3630–85.[2]
	ICP/AES	200.7, Rev. 4.4 (1994).	3120 B–2011.		
	ICP/MS	200.8, Rev. 5.4 (1994).	3125 B–2011	D5673–10	993.14.[3]
	Flame photometric.		3500–K B–2011.		
	Electrode		3500–K C–2011.		
	Ion Chromatography.			D6919–09.	

TABLE IB—LIST OF APPROVED INORGANIC TEST PROCEDURES—Continued

Parameter	Methodology [58]	EPA [52]	Standard methods	ASTM	USGS/AOAC/other
53. Residue—Total, mg/L.	Gravimetric, 103–105°.	.....	2540 B–2011 ...	.....	I–3750–85.[2]
54. Residue—filterable, mg/L.	Gravimetric, 180°.	.....	2540 C–2011 ...	D5907–13	I–1750–85.[2]
55. Residue—non-filterable (TSS), mg/L.	Gravimetric, 103–105° post washing of residue.	.....	2540 D–2011 ...	D5907–13	I–3765–85.[2]
56. Residue—settleable, mg/L.	Volumetric, (Imhoff cone), or gravimetric.	.....	2540 F–2011.		
57. Residue—Volatile, mg/L.	Gravimetric, 550°.	160.4 (Issued 1971) [1].	2540–E–2011 ..	.....	I–3753–85.[2]
58. Rhodium—Total [4], mg/L.	Digestion,[4] followed by any of the following:				
	AA direct aspiration, or.	.....	3111 B–2011.		
	AA furnace	265.2 (Issued 1978) [1].			
	ICP/MS	.....	3125 B–2011.		
59. Ruthenium—Total [4], mg/L.	Digestion,[4] followed by any of the following:				
	AA direct aspiration, or.	.....	3111 B–2011.		
	AA furnace	267.2 [1].			
	ICP/MS	.....	3125 B–2011.		
60. Selenium—Total [4], mg/L.	Digestion,[4] followed by any of the following:				
	AA furnace	.....	3113 B–2010 ...	D3859–08 (B) ..	I–4668–98.[49]
	STGFAA	200.9, Rev. 2.2 (1994).			
	ICP/AES [36]	200.5, Rev 4.2 (2003) [68]; 200.7, Rev. 4.4 (1994).	3120 B–2011 ...	D1976–12.	
	ICP/MS	200.8, Rev. 5.4 (1994).	3125 B–2011 ...	D5673–10	993.14,[3] I–4020–05.[70]
	AA gaseous hydride.	.....	3114 B–2011, or 3114 C–2011.	D3859–08 (A) ..	I–3667–85.[2]
61. Silica—Dissolved,[37] mg/L.	0.45-micron filtration followed by any of the following:				
	Colorimetric, Manual.	.....	4500–SiO_2 C–2011.	D859–10	I–1700–85.[2]
	Automated (Molybdosilicate).	.....	4500–SiO_2 E–2011 or F–2011.	.....	I–2700–85.[2]
	ICP/AES	200.5, Rev. 4.2 (2003) [68]; 200.7, Rev. 4.4 (1994).	3120 B–2011 ...	.....	I–4471–97.[50]

TABLE IB—LIST OF APPROVED INORGANIC TEST PROCEDURES—Continued

Parameter	Methodology [58]	EPA [52]	Standard methods	ASTM	USGS/AOAC/other
	ICP/MS	200.8, Rev. 5.4 (1994).	3125 B–2011	D5673–10	993.14.[3]
62. Silver—Total,[4 31] mg/L.	Digestion,[4 29] followed by any of the following:				
	AA direct aspiration.		3111 B–2011 or 3111 C–2011.		974.27,[3] p. 37,[9] I–3720–85.[2]
	AA furnace		3113 B–2010		I–4724–89.[51]
	STGFAA	200.9, Rev. 2.2 (1994).			
	ICP/AES	200.5, Rev. 4.2 (2003) [68]; 200.7, Rev. 4.4 (1994).	3120 B–2011	D1976–12	I–4471–97.[50]
	ICP/MS	200.8, Rev. 5.4 (1994).	3125 B–2011	D5673–10	993.14,[3] I–4471–97.[50]
	DCP				See footnote.[34]
63. Sodium—Total,[4] mg/L.	Digestion,[4] followed by any of the following:				
	AA direct aspiration.		3111 B–2011		973.54,[3] I–3735–85.[2]
	ICP/AES	200.5, Rev. 4.2 (2003) [68]; 200.7, Rev. 4.4 (1994).	3120 B–2011		I–4471–97.[50]
	ICP/MS	200.8, Rev. 5.4 (1994).	3125 B–2011	D5673–10	993.14.[3]
	DCP				See footnote.[34]
	Flame photometric.		3500–Na B–2011.		
	Ion Chromatography.			D6919–09.	
64. Specific conductance, micromhos/cm at 25 °C.	Wheatstone bridge.	120.1 (Rev. 1982) [1].	2510 B–2011	D1125–95(99) (A).	973.40,[3] I–2781–85.[2]
65. Sulfate (as SO_4), mg/L.	Automated colorimetric.	375.2, Rev. 2.0 (1993).	4500–SO_4^{2-} F–2011 or G-2011.		
	Gravimetric		4500–SO_4^{2-} C–2011 or D–2011.		925.54.[3]
	Turbidimetric		4500–SO_4^{2-} E–2011.	D516–11.	
	Ion Chromatography.	300.0, Rev. 2.1 (1993) and 300.1, Rev. 1.0 (1997).	4110 B–2011 or C–2011.	D4327–03	993.30,[3] I–4020–05.[70]
	CIE/UV		4140 B–2011	D6508–1010	D6508, Rev. 2.[54]
66. Sulfide (as S), mg/L.	Sample Pretreatment.		4500–S^{2-} B, C–2011.		
	Titrimetric (iodine).		4500–S^{2-} F–2011.		I–3840–85.[2]
	Colorimetric (methylene blue).		4500–S^{2-} D–2011.		
	Ion Selective Electrode.		4500–S^{2-} G-2011.	D4658–09.	

TABLE IB—LIST OF APPROVED INORGANIC TEST PROCEDURES—Continued

Parameter	Methodology [58]	EPA [52]	Standard methods	ASTM	USGS/AOAC/other
67. Sulfite (as SO_3), mg/L.	Titrimetric (iodine-iodate).	.....	4500–SO_3^{2-} B–2011.		
68. Surfactants, mg/L.	Colorimetric (methylene blue).	.....	5540 C–2011 ...	D2330–02.	
69. Temperature, °C.	Thermometric ...	.....	2550 B–2010 ...	.....	See footnote.[32]
70. Thallium—Total,[4] mg/L.	Digestion,[4] followed by any of the following:				
	AA direct aspiration.	.....	3111 B–2011.		
	AA furnace	279.2 (Issued 1978) [1].	3113 B–2010.		
	STGFAA	200.9, Rev. 2.2 (1994).			
	ICP/AES	200.7, Rev. 4.4 (1994).	3120 B–2011 ...	D1976–12.	
	ICP/MS	200.8, Rev. 5.4 (1994).	3125 B–2011 ...	D5673–10	993.14,[3] I–4471–97.[50]
71. Tin—Total,[4] mg/L.	Digestion,[4] followed by any of the following:				
	AA direct aspiration.	.....	3111 B–2011 ...	.....	I–3850–78.[8]
	AA furnace	.....	3113 B–2010.		
	STGFAA	200.9, Rev. 2.2 (1994).			
	ICP/AES	200.5, Rev. 4.2 (2003) [68]; 200.7, Rev. 4.4 (1994).			
	ICP/MS	200.8, Rev. 5.4 (1994).	3125 B–2011 ...	D5673–10	993.14.[3]
72. Titanium—Total,[4] mg/L.	Digestion,[4] followed by any of the following:				
	AA direct aspiration.	.....	3111 D–2011.		
	AA furnace	283.2 (Issued 1978) [1].			
	ICP/AES	200.7, Rev. 4.4 (1994).			
	ICP/MS	200.8, Rev. 5.4 (1994).	3125 B–2011 ...	D5673–10	993.14.[3]
	DCP	.....	.....	.....	See footnote.[34]
73. Turbidity, NTU [53].	Nephelometric ..	180.1, Rev. 2.0 (1993).	2130 B–2011 ...	D1889–00	I–3860–85.[2] See footnote.[65] See footnote.[66] See footnote.[67]
74. Vanadium—Total,[4] mg/L.	Digestion,[4] followed by any of the following:				
	AA direct aspiration.	.....	3111 D–2011.		
	AA furnace	.....	3113 B–2010 ...	D3373–12.	

TABLE IB—LIST OF APPROVED INORGANIC TEST PROCEDURES—Continued

Parameter	Methodology [58]	EPA [52]	Standard methods	ASTM	USGS/AOAC/other
	ICP/AES	200.5, Rev. 4.2 (2003); [68] 200.7, Rev. 4.4 (1994).	3120 B–2011	D1976–12	I–4471–97.[50]
	ICP/MS	200.8, Rev. 5.4 (1994).	3125 B–2011	D5673–10	993.14,[3] I–4020–05.[70]
	DCP			D4190–08	See footnote.[34]
	Colorimetric (Gallic Acid).		3500–V B–2011.		
75. Zinc—Total,[4] mg/L.	Digestion,[4] followed by any of the following:				
	AA direct aspiration [36].		3111 B–2011 or 3111 C–2011.	D1691–12 (A or B).	974.27,[3] p. 37,[9] I–3900–85.[2]
	AA furnace	289.2 (Issued 1978) [1].			
	ICP/AES [36]	200.5, Rev. 4.2 (2003) [68]; 200.7, Rev. 4.4 (1994).	3120 B–2011	D1976–12	I–4471–97.[50]
	ICP/MS	200.8, Rev. 5.4 (1994).	3125 B–2011	D5673–10	993.14,[3] I–4020–05.[70]
	DCP [36]			D4190–08	See footnote.[34]
	Colorimetric (Zincon).		3500 Zn B–2011.		See footnote.[33]
76. Acid Mine Drainage.		1627 [69].			

Table IB Notes:

[1] Methods for Chemical Analysis of Water and Wastes, EPA–600/4–79–020. Revised March 1983 and 1979, where applicable. U.S. EPA.

[2] Methods for Analysis of Inorganic Substances in Water and Fluvial Sediments, Techniques of Water-Resource Investigations of the U.S. Geological Survey, Book 5, Chapter A1., unless otherwise stated. 1989. USGS.

[3] Official Methods of Analysis of the Association of Official Analytical Chemists, Methods Manual, Sixteenth Edition, 4th Revision, 1998. AOAC International.

[4] For the determination of total metals (which are equivalent to total recoverable metals) the sample is not filtered before processing. A digestion procedure is required to solubilize analytes in suspended material and to break down organic-metal complexes (to convert the analyte to a detectable form for colorimetric analysis). For non-platform graphite furnace atomic absorption determinations, a digestion using nitric acid (as specified in Section 4.1.3 of Methods for the Chemical Analysis of Water and Wastes) is required prior to analysis. The procedure used should subject the sample to gentle, acid refluxing and at no time should the sample be taken to dryness. For direct aspiration flame atomic absorption determinations (FLAA) a combination acid (nitric and hydrochloric acids) digestion is preferred prior to analysis. The approved total recoverable digestion is described as Method 200.2 in Supplement I of ''Methods for the Determination of Metals in Environmental Samples'' EPA/600R–94/111, May, 1994, and is reproduced in EPA Methods 200.7, 200.8, and 200.9 from the same Supplement. However, when using the gaseous hydride technique or for the determination of certain elements such as antimony, arsenic, selenium, silver, and tin by non-EPA graphite furnace atomic absorption methods, mercury by cold vapor atomic absorption, the noble metals and titanium by FLAA, a specific or modified sample digestion procedure may be required and in all cases the referenced method write-up should be consulted for specific instruction and/or cautions. For analyses using inductively coupled plasma-atomic emission spectrometry (ICP–AES), the direct current plasma (DCP) technique or EPA spectrochemical techniques (platform furnace AA, ICP–AES, and ICP–MS) use EPA Method 200.2 or an approved alternate procedure (e.g., CEM microwave digestion, which may be used with certain analytes as indicated in Table IB); the total recoverable digestion procedures in EPA Methods 200.7, 200.8, and 200.9 may be used for those respective methods. Regardless of the digestion procedure, the results of the analysis after digestion procedure are reported as ''total'' metals.

[5] Copper sulfate or other catalysts that have been found suitable may be used in place of mercuric sulfate.

[6] Manual distillation is not required if comparability data on representative effluent samples are on file to show that this preliminary distillation step is not necessary: However, manual distillation will be required to resolve any controversies. In general, the analytical method should be consulted regarding the need for distillation. If the method is not clear, the laboratory may compare a minimum of 9 different sample matrices to evaluate the need for distillation. For each matrix, a matrix spike and matrix spike duplicate are analyzed both with and without the distillation step. (A total of 36 samples, assuming 9 matrices). If results are comparable, the laboratory may dispense with the distillation step for future analysis. Comparable is defined as <20% RPD for all tested matrices). Alternatively the two populations of spike recovery percentages may be compared using a recognized statistical test.

[7] Industrial Method Number 379–75 WE Ammonia, Automated Electrode Method, Technicon Auto Analyzer II. February 19, 1976. Bran & Luebbe Analyzing Technologies Inc.

[8] The approved method is that cited in Methods for Determination of Inorganic Substances in Water and Fluvial Sediments, Techniques of Water-Resources Investigations of the U.S. Geological Survey, Book 5, Chapter A1. 1979. USGS.

[9] American National Standard on Photographic Processing Effluents. April 2, 1975. American National Standards Institute.

[10] In-Situ Method 1003–8–2009, Biochemical Oxygen Demand (BOD) Measurement by Optical Probe. 2009. In-Situ Incorporated.

[11] The use of normal and differential pulse voltage ramps to increase sensitivity and resolution is acceptable.

[12] Carbonaceous biochemical oxygen demand ($CBOD_5$) must not be confused with the traditional BOD_5 test method which measures ''total 5-day BOD.'' The addition of the nitrification inhibitor is not a procedural option, but must be included to report the $CBOD_5$ parameter. A discharger whose permit requires reporting the traditional BOD_5 may not use a nitrification inhibitor in the procedure for reporting the results. Only when a discharger's permit specifically states $CBOD_5$ is required can the permittee report data using a nitrification inhibitor.

[13] OIC Chemical Oxygen Demand Method. 1978. Oceanography International Corporation.

[14] Method 8000, Chemical Oxygen Demand, Hach Handbook of Water Analysis, 1979. Hach Company.

[15] The back titration method will be used to resolve controversy.

[16] Orion Research Instruction Manual, Residual Chlorine Electrode Model 97–70. 1977. Orion Research Incorporated. The calibration graph for the Orion residual chlorine method must be derived using a reagent blank and three standard solutions, containing 0.2, 1.0, and 5.0 mL 0.00281 N potassium iodate/100 mL solution, respectively.

[17] Method 245.7, Mercury in Water by Cold Vapor Atomic Fluorescence Spectrometry, EPA–821–R–05–001. Revision 2.0, February 2005. US EPA.

[18] National Council of the Paper Industry for Air and Stream Improvement (NCASI) Technical Bulletin 253 (1971) and Technical Bulletin 803, May 2000.

[19] Method 8506, Bicinchoninate Method for Copper, Hach Handbook of Water Analysis. 1979. Hach Company.

[20] When using a method with block digestion, this treatment is not required.

[21] Industrial Method Number 378–75WA, Hydrogen ion (pH) Automated Electrode Method, Bran & Luebbe (Technicon) Autoanalyzer II. October 1976. Bran & Luebbe Analyzing Technologies.

[22] Method 8008, 1,10-Phenanthroline Method using FerroVer Iron Reagent for Water. 1980. Hach Company.

[23] Method 8034, Periodate Oxidation Method for Manganese, Hach Handbook of Wastewater Analysis. 1979. Hach Company.

[24] Methods for Analysis of Organic Substances in Water and Fluvial Sediments, Techniques of Water-Resources Investigations of the U.S. Geological Survey, Book 5, Chapter A3, (1972 Revised 1987). 1987. USGS.

[25] Method 8507, Nitrogen, Nitrite-Low Range, Diazotization Method for Water and Wastewater. 1979. Hach Company.

[26] Just prior to distillation, adjust the sulfuric-acid-preserved sample to pH 4 with 1 + 9 NaOH.

[27] The colorimetric reaction must be conducted at a pH of 10.0 ± 0.2.

[28] Addison, R.F., and R.G. Ackman. 1970. Direct Determination of Elemental Phosphorus by Gas-Liquid Chromatography, *Journal of Chromatography*, 47(3):421–426.

[29] Approved methods for the analysis of silver in industrial wastewaters at concentrations of 1 mg/L and above are inadequate where silver exists as an inorganic halide. Silver halides such as the bromide and chloride are relatively insoluble in reagents such as nitric acid but are readily soluble in an aqueous buffer of sodium thiosulfate and sodium hydroxide to pH of 12. Therefore, for levels of silver above 1 mg/L, 20 mL of sample should be diluted to 100 mL by adding 40 mL each of 2 M $Na_2S_2O_3$and NaOH. Standards should be prepared in the same manner. For levels of silver below 1 mg/L the approved method is satisfactory.

[30] The use of EDTA decreases method sensitivity. Analysts may omit EDTA or replace with another suitable complexing reagent provided that all method specified quality control acceptance criteria are met.

[31] For samples known or suspected to contain high levels of silver (e.g., in excess of 4 mg/L), cyanogen iodide should be used to keep the silver in solution for analysis. Prepare a cyanogen iodide solution by adding 4.0 mL of concentrated NH_4OH, 6.5 g of KCN, and 5.0 mL of a 1.0 N solution of I_2 to 50 mL of reagent water in a volumetric flask and dilute to 100.0 mL. After digestion of the sample, adjust the pH of the digestate to >7 to prevent the formation of HCN under acidic conditions. Add 1 mL of the cyanogen iodide solution to the sample digestate and adjust the volume to 100 mL with reagent water (NOT acid). If cyanogen iodide is added to sample digestates, then silver standards must be prepared that contain cyanogen iodide as well. Prepare working standards by diluting a small volume of a silver stock solution with water and adjusting the pH>7 with NH_4OH. Add 1 mL of the cyanogen iodide solution and let stand 1 hour. Transfer to a 100-mL volumetric flask and dilute to volume with water.

[32] ''Water Temperature-Influential Factors, Field Measurement and Data Presentation,'' Techniques of Water-Resources Investigations of the U.S. Geological Survey, Book 1, Chapter D1. 1975. USGS.

[33] Method 8009, Zincon Method for Zinc, Hach Handbook of Water Analysis, 1979. Hach Company.

[34] Method AES0029, Direct Current Plasma (DCP) Optical Emission Spectrometric Method for Trace Elemental Analysis of Water and Wastes. 1986-Revised 1991. Thermo Jarrell Ash Corporation.

[35] In-Situ Method 1004–8–2009, Carbonaceous Biochemical Oxygen Demand (CBOD) Measurement by Optical Probe. 2009. In-Situ Incorporated.

[36] Microwave-assisted digestion may be employed for this metal, when analyzed by this methodology. Closed Vessel Microwave Digestion of Wastewater Samples for Determination of Metals. April 16, 1992. CEM Corporation.

[37] When determining boron and silica, only plastic, PTFE, or quartz laboratory ware may be used from start until completion of analysis.

[38] Only use n-hexane (n-Hexane—85% minimum purity, 99.0% min. saturated C6 isomers, residue less than 1 mg/L) extraction solvent when determining Oil and Grease parameters—Hexane Extractable Material (HEM), or Silica Gel Treated HEM (analogous to EPA Methods 1664 Rev. A and 1664 Rev. B). Use of other extraction solvents is prohibited.

[39] Method PAI–DK01, Nitrogen, Total Kjeldahl, Block Digestion, Steam Distillation, Titrimetric Detection. Revised December 22, 1994. OI Analytical.

[40] Method PAI–DK02, Nitrogen, Total Kjeldahl, Block Digestion, Steam Distillation, Colorimetric Detection. Revised December 22, 1994. OI Analytical.

[41] Method PAI–DK03, Nitrogen, Total Kjeldahl, Block Digestion, Automated FIA Gas Diffusion. Revised December 22, 1994. OI Analytical.

[42] Method 1664 Rev. B is the revised version of EPA Method 1664 Rev. A. U.S. EPA. February 1999, Revision A. Method 1664, n-Hexane Extractable Material (HEM; Oil and Grease) and Silica Gel Treated n-Hexane Extractable Material (SGT–HEM; Non-polar Material) by Extraction and Gravimetry. EPA–821–R–98–002. U.S. EPA. February 2010, Revision B. Method 1664, n-Hexane Extractable Material (HEM; Oil and Grease) and Silica Gel Treated n-Hexane Extractable Material (SGT–HEM; Non-polar Material) by Extraction and Gravimetry. EPA–821–R–10–001.

[43] Method 1631, Revision E, Mercury in Water by Oxidation, Purge and Trap, and Cold Vapor Atomic Fluorescence Spectrometry, EPA–821–R–02–019. Revision E. August 2002, U.S. EPA. The application of clean techniques described in EPA's Method 1669: *Sampling Ambient Water for Trace Metals at EPA Water Quality Criteria Levels,* EPA–821–R–96–011, are recommended to preclude contamination at low-level, trace metal determinations.

[44] Method OIA–1677–09, Available Cyanide by Ligand Exchange and Flow Injection Analysis (FIA). 2010. OI Analytical.

[45] Open File Report 00–170, Methods of Analysis by the U.S. Geological Survey National Water Quality Laboratory—Determination of Ammonium Plus Organic Nitrogen by a Kjeldahl Digestion Method and an Automated Photometric Finish that Includes Digest Cleanup by Gas Diffusion. 2000. USGS.

[46] Open File Report 93–449, Methods of Analysis by the U.S. Geological Survey National Water Quality Laboratory—Determination of Chromium in Water by Graphite Furnace Atomic Absorption Spectrophotometry. 1993. USGS.

[47] Open File Report 97–198, Methods of Analysis by the U.S. Geological Survey National Water Quality Laboratory—Determination of Molybdenum by Graphite Furnace Atomic Absorption Spectrophotometry. 1997. USGS.

[48] Open File Report 92–146, Methods of Analysis by the U.S. Geological Survey National Water Quality Laboratory—Determination of Total Phosphorus by Kjeldahl Digestion Method and an Automated Colorimetric Finish That Includes Dialysis. 1992. USGS.

[49] Open File Report 98–639, Methods of Analysis by the U.S. Geological Survey National Water Quality Laboratory—Determination of Arsenic and Selenium in Water and Sediment by Graphite Furnace-Atomic Absorption Spectrometry. 1999. USGS.

[50] Open File Report 98–165, Methods of Analysis by the U.S. Geological Survey National Water Quality Laboratory—Determination of Elements in Whole-water Digests Using Inductively Coupled Plasma-Optical Emission Spectrometry and Inductively Coupled Plasma-Mass Spectrometry. 1998. USGS.

[51] Open File Report 93–125, Methods of Analysis by the U.S. Geological Survey National Water Quality Laboratory—Determination of Inorganic and Organic Constituents in Water and Fluvial Sediments. 1993. USGS.

[52] Unless otherwise indicated, all EPA methods, excluding EPA Method 300.1, are published in U.S. EPA. May 1994. Methods for the Determination of Metals in Environmental Samples, Supplement I, EPA/600/R–94/111; or U.S. EPA. August 1993. Methods for the Determination of Inorganic Substances in Environmental Samples, EPA/600/R–93/100. EPA Method 300.1 is US EPA. Revision 1.0, 1997, including errata cover sheet April 27, 1999. Determination of Inorganic Ions in Drinking Water by Ion Chromatography.

[53] Styrene divinyl benzene beads (e.g., AMCO–AEPA–1 or equivalent) and stabilized formazin (e.g., Hach StablCal™ or equivalent) are acceptable substitutes for formazin.

[54] Method D6508–10, Test Method for Determination of Dissolved Inorganic Anions in Aqueous Matrices Using Capillary Ion Electrophoresis and Chromate Electrolyte. 2010. ASTM.

[55] Kelada-01, Kelada Automated Test Methods for Total Cyanide, Acid Dissociable Cyanide, and Thiocyanate, EPA 821–B–01–009, Revision 1.2, August 2001. US EPA. Note: A 450–W UV lamp may be used in this method instead of the 550–W lamp specified if it provides performance within the quality control (QC) acceptance criteria of the method in a given instrument. Similarly, modified flow cell configurations and flow conditions may be used in the method, provided that the QC acceptance criteria are met.

[56] QuikChem Method 10–204–00–1–X, Digestion and Distillation of Total Cyanide in Drinking and Wastewaters using MICRO DIST and Determination of Cyanide by Flow Injection Analysis. Revision 2.2, March 2005. Lachat Instruments.

[57] When using sulfide removal test procedures described in EPA Method 335.4–1, reconstitute particulate that is filtered with the sample prior to distillation.

[58] Unless otherwise stated, if the language of this table specifies a sample digestion and/or distillation ''followed by'' analysis with a method, approved digestion and/or distillation are required prior to analysis.

[59] Samples analyzed for available cyanide using OI Analytical method OIA–1677–09 or ASTM method D6888–09 that contain particulate matter may be filtered only after the ligand exchange reagents have been added to the samples, because the ligand exchange process converts complexes containing available cyanide to free cyanide, which is not removed by filtration. Analysts are further cautioned to limit the time between the addition of the ligand exchange reagents and sample filtration to no more than 30 minutes to preclude settling of materials in samples.

[60] Analysts should be aware that pH optima and chromophore absorption maxima might differ when phenol is replaced by a substituted phenol as the color reagent in Berthelot Reaction (''phenol-hypochlorite reaction'') colorimetric ammonium determination methods. For example when phenol is used as the color reagent, pH optimum and wavelength of maximum absorbance are about 11.5 and 635 nm, respectively—see, Patton, C.J. and S.R. Crouch. March 1977. Anal. Chem. 49:464–469. These reaction parameters increase to pH > 12.6 and 665 nm when salicylate is used as the color reagent—see, Krom, M.D. April 1980. The Analyst 105:305–316.

[61] If atomic absorption or ICP instrumentation is not available, the aluminon colorimetric method detailed in the 19th Edition of *Standard Methods* may be used. This method has poorer precision and bias than the methods of choice.

[62] Easy (1-Reagent) Nitrate Method, Revision November 12, 2011. Craig Chinchilla.

[63] Hach Method 10360, Luminescence Measurement of Dissolved Oxygen in Water and Wastewater and for Use in the Determination of BOD_5 and $cBOD_5$. Revision 1.2, October 2011. Hach Company. This method may be used to measure dissolved oxygen when performing the methods approved in Table IB for measurement of biochemical oxygen demand (BOD) and carbonaceous biochemical oxygen demand (CBOD).

[64] In-Situ Method 1002–8–2009, Dissolved Oxygen (DO) Measurement by Optical Probe. 2009. In-Situ Incorporated.

[65] Mitchell Method M5331, Determination of Turbidity by Nephelometry. Revision 1.0, July 31, 2008. Leck Mitchell.

[66] Mitchell Method M5271, Determination of Turbidity by Nephelometry. Revision 1.0, July 31, 2008. Leck Mitchell.

[67] Orion Method AQ4500, Determination of Turbidity by Nephelometry. Revision 5, March 12, 2009. Thermo Scientific.

[68] EPA Method 200.5, Determination of Trace Elements in Drinking Water by Axially Viewed Inductively Coupled Plasma-Atomic Emission Spectrometry, EPA/600/R–06/115. Revision 4.2, October 2003. US EPA.

[69] Method 1627, Kinetic Test Method for the Prediction of Mine Drainage Quality, EPA–821–R–09–002. December 2011. US EPA.

[70] Techniques and Methods Book 5–B1, Determination of Elements in Natural-Water, Biota, Sediment and Soil Samples Using Collision/Reaction Cell Inductively Coupled Plasma-Mass Spectrometry, Chapter 1, Section B, Methods of the National Water Quality Laboratory, Book 5, Laboratory Analysis, 2006. USGS.

[71] Water-Resources Investigations Report 01–4132, Methods of Analysis by the U.S. Geological Survey National Water Quality Laboratory—Determination of Organic Plus Inorganic Mercury in Filtered and Unfiltered Natural Water with Cold Vapor-Atomic Fluorescence Spectrometry, 2001. USGS.

[72] USGS Techniques and Methods 5–B8, Chapter 8, Section B, Methods of the National Water Quality Laboratory Book 5, Laboratory Analysis, 2011 USGS.

[73] NECi Method N07–0003, ''Nitrate Reductase Nitrate-Nitrogen Analysis,'' Revision 9.0, March 2014, The Nitrate Elimination Co., Inc.

[74] Timberline Instruments, LLC Method Ammonia-001, ''Determination of Inorganic Ammonia by Continuous Flow Gas Diffusion and Conductivity Cell Analysis,'' June 2011, Timberline Instruments, LLC.

[75] Hach Company Method 10206, ''Spectrophotometric Measurement of Nitrate in Water and Wastewater,'' Revision 2.1, January 2013, Hach Company.

[76] Hach Company Method 10242, ''Simplified Spectrophotometric Measurement of Total Kjeldahl Nitrogen in Water and Wastewater,'' Revision 1.1, January 2013, Hach Company.

[77] National Council for Air and Stream Improvement (NCASI) Method TNTP–W10900, ''Total (Kjeldahl) Nitrogen and Total Phosphorus in Pulp and Paper Biologically Treated Effluent by Alkaline Persulfate Digestion,'' June 2011, National Council for Air and Stream Improvement, Inc.

[78] The pH adjusted sample is to be adjusted to 7.6 for NPDES reporting purposes.

TABLE IC—LIST OF APPROVED TEST PROCEDURES FOR NON-PESTICIDE ORGANIC COMPOUNDS

Parameter [1]	Method	EPA [2 7]	Standard methods	ASTM	Other
1. Acenaphthene	GC	610	.		
	GC/MS	625.1, 1625B	6410 B–2000		See footnote,[9] p. 27.
	HPLC	610	6440 B–2005	D4657–92 (98).	
2. Acenaphthylene	GC	610	.		
	GC/MS	625.1, 1625B	6410 B–2000		See footnote,[9] p. 27.
	HPLC	610	6440 B–2005	D4657–92 (98).	
3. Acrolein	GC	603	.		
	GC/MS	624.1,[4] 1624B	.		
4. Acrylonitrile	GC	603	.		
	GC/MS	624.1,[4] 1624B	.		
5. Anthracene	GC	610	.		
	GC/MS	625.1, 1625B	6410 B–2000		See footnote,[9] p. 27.
	HPLC	610	6440 B–2005	D4657–92 (98).	
6. Benzene	GC	602	6200 C–2011.		
	GC/MS	624.1, 1624B	6200 B–2011.		
7. Benzidine	Spectro-photometric				See footnote,[3] p.1.
	GC/MS	625.1[5], 1625B	6410 B–2000.		
	HPLC	605	.		
8. Benzo(a)anthracene	GC	610	.		
	GC/MS	625.1, 1625B	6410 B–2000		See footnote,[9] p. 27.
	HPLC	610	6440 B–2005	D4657–92 (98).	
9. Benzo(a)pyrene	GC	610	.		
	GC/MS	625.1, 1625B	6410 B–2000		See footnote,[9] p. 27.
	HPLC	610	6440 B–2005	D4657–92 (98).	
10. Benzo(b)fluoranthene	GC	610	.		
	GC/MS	625.1, 1625B	6410 B–2000		See footnote,[9] p. 27.
	HPLC	610	6440 B–2005	D4657–92 (98).	
11. Benzo(g,h,i)perylene	GC	610	.		
	GC/MS	625.1, 1625B	6410 B–2000		See footnote,[9] p. 27.
	HPLC	610	6440 B–2005	D4657–92 (98).	
12. Benzo(k)fluoranthene	GC	610	.		
	GC/MS	625.1, 1625B	6410 B–2000		See footnote,[9] p. 27.
	HPLC	610	6440 B–2005	D4657–92 (98).	
13. Benzyl chloride	GC				See footnote,[3] p. 130.
	GC/MS				See footnote,[6] p. S102.
14. Butyl benzyl phthalate	GC	606	.		
	GC/MS	625.1, 1625B	6410 B–2000		See footnote,[9] p. 27.
15. bis(2-Chloroethoxy) methane	GC	611	.		
	GC/MS	625.1, 1625B	6410 B–2000		See footnote,[9] p. 27.
16. bis(2-Chloroethyl) ether	GC	611	.		

	GC/MS	625.1, 1625B	6410 B–2000		See footnote,[9] p. 27.
17. bis(2-Ethylhexyl) phthalate	GC	606	.		
	GC/MS	625.1, 1625B	6410 B–2000		See footnote,[9] p. 27.
18. Bromodichloromethane	GC	601	6200 C–2011.		
	GC/MS	624.1, 1624B	6200 B–2011.		
19. Bromoform	GC	601	6200 C–2011.		
	GC/MS	624.1, 1624B	6200 B–2011.		
20. Bromomethane	GC	601	6200 C–2011.		
	GC/MS	624.1, 1624B	6200 B–2011.		
21. 4-Bromophenyl phenyl ether	GC	611	.		
	GC/MS	625.1, 1625B	6410 B–2000		See footnote,[9] p. 27.
22. Carbon tetrachloride	GC	601	6200 C–2011		See footnote,[3] p. 130.
	GC/MS	624.1, 1624B	6200 B–2011.		
23. 4-Chloro-3-methyl phenol	GC	604	6420 B–2000.		
	GC/MS	625.1, 1625B	6410 B–2000		See footnote,[9] p. 27.
24. Chlorobenzene	GC	601, 602	6200 C–2011		See footnote,[3] p. 130.
	GC/MS	624.1, 1624B	6200 B–2011.		
25. Chloroethane	GC	601	6200 C–2011.		
	GC/MS	624.1, 1624B	6200 B–2011.		
26. 2-Chloroethylvinyl ether	GC	601	.		
	GC/MS	624.1, 1624B	.		
27. Chloroform	GC	601	6200 C–2011		See footnote,[3] p. 130.
	GC/MS	624.1, 1624B	6200 B–2011.		
28. Chloromethane	GC	601	6200 C–2011.		
	GC/MS	624.1, 1624B	6200 B–2011.		
29. 2-Chloronaphthalene	GC	612	.		
	GC/MS	625.1, 1625B	6410 B–2000		See footnote,[9] p. 27.
30. 2-Chlorophenol	GC	604	6420 B–2000.		
	GC/MS	625.1, 1625B	6410 B–2000		See footnote,[9] p. 27.
31. 4-Chlorophenyl phenyl ether	GC	611	.		
	GC/MS	625.1, 1625B	6410 B–2000		See footnote,[9] p. 27.
32. Chrysene	GC	610	.		
	GC/MS	625.1, 1625B	6410 B–2000		See footnote,[9] p. 27.
	HPLC	610	6440 B–2005	D4657–92 (98).	
33. Dibenzo(a,h)anthracene	GC	610	.		
	GC/MS	625.1, 1625B	6410 B–2000		See footnote,[9] p. 27.
	HPLC	610	6440 B–2005	D4657–92 (98).	
34. Dibromochloromethane	GC	601	6200 C–2011.		
	GC/MS	624.1, 1624B	6200 B–2011.		
35. 1,2-Dichlorobenzene	GC	601, 602	6200 C–2011.		
	GC/MS	624.1, 1625B	6200 B–2011		See footnote,[9] p. 27.
36. 1,3-Dichlorobenzene	GC	601, 602	6200 C–2011.		
	GC/MS	624.1, 1625B	6200 B–2011		See footnote,[9] p. 27.
37. 1,4-Dichlorobenzene	GC	601, 602	6200 C–2011.		

TABLE IC—LIST OF APPROVED TEST PROCEDURES FOR NON-PESTICIDE ORGANIC COMPOUNDS—Continued

Parameter [1]	Method	EPA [2 7]	Standard methods	ASTM	Other
	GC/MS	624.1, 1625B	6200 B–2011		See footnote,[9] p. 27.
38. 3,3'-Dichlorobenzidine	GC/MS	625.1, 1625B	6410 B–2000.		
	HPLC	605	.		
39. Dichlorodifluoromethane	GC	601	.		
	GC/MS		6200 C–2011.		
40. 1,1-Dichloroethane	GC	601	6200 C–2011.		
	GC/MS	624.1, 1624B	6200 B–2011.		
41. 1,2-Dichloroethane	GC	601	6200 C–2011.		
	GC/MS	624.1, 1624B	6200 B–2011.		
42. 1,1-Dichloroethene	GC	601	6200 C–2011.		
	GC/MS	624.1, 1624B	6200 B–2011.		
43. trans-1,2-Dichloroethene	GC	601	6200 C–2011.		
	GC/MS	624.1, 1624B	6200 B–2011.		
44. 2,4-Dichlorophenol	GC	604	6420 B–2000.		
	GC/MS	625.1, 1625B	6410 B–2000		See footnote,[9] p. 27.
45. 1,2-Dichloropropane	GC	601	6200 C–2011.		
	GC/MS	624.1, 1624B	6200 B–2011.		
46. *cis*-1,3-Dichloropropene	GC	601	6200 C–2011.		
	GC/MS	624.1, 1624B	6200 B–2011.		
47. *trans*-1,3-Dichloropropene	GC	601	6200 C–2011.		
	GC/MS	624.1, 1624B	6200 B–2011.		
48. Diethyl phthalate	GC	606	.		
	GC/MS	625.1, 1625B	6410 B–2000		See footnote,[9] p. 27.
49. 2,4-Dimethylphenol	GC	604	6420 B–2000.		
	GC/MS	625.1, 1625B	6410 B–2000		See footnote,[9] p. 27.
50. Dimethyl phthalate	GC	606	.		
	GC/MS	625.1, 1625B	6410 B–2000		See footnote,[9] p. 27.
51. Di-n-butyl phthalate	GC	606	.		
	GC/MS	625.1, 1625B	6410 B–2000		See footnote,[9] p. 27.
52. Di-n-octyl phthalate	GC	606	.		
	GC/MS	625.1, 1625B	6410 B–2000		See footnote,[9] p. 27.
53. 2, 4-Dinitrophenol	GC	604	6420 B–2000		See footnote,[9] p. 27.
	GC/MS	625.1, 1625B	6410 B–2000.		
54. 2,4-Dinitrotoluene	GC	609	.		
	GC/MS	625.1, 1625B	6410 B–2000		See footnote,[9] p. 27.
55. 2,6-Dinitrotoluene	GC	609	.		
	GC/MS	625.1, 1625B	6410 B–2000		See footnote,[9] p. 27.
56. Epichlorohydrin	GC				See footnote,[3] p. 130.
	GC/MS				See footnote,[6] p. S102.
57. Ethylbenzene	GC	602	6200 C–2011.		

	GC/MS	624.1, 1624B	6200 B–2011.		
58. Fluoranthene	GC	610	.		
	GC/MS	625.1, 1625B	6410 B–2000		See footnote,[9] p. 27.
	HPLC	610	6440 B–2005	D4657–92 (98).	
59. Fluorene	GC	610	.		
	GC/MS	625.1, 1625B	6410 B–2000		See footnote,[9] p. 27.
	HPLC	610	6440 B–2005	D4657–92 (98).	
60. 1,2,3,4,6,7,8-Heptachloro-dibenzofuran.	GC/MS	1613B	.		
61. 1,2,3,4,7,8,9-Heptachloro-dibenzofuran.	GC/MS	1613B	.		
62. 1,2,3,4,6,7,8- Heptachloro-dibenzo-*p*-dioxin.	GC/MS	1613B	.		
63. Hexachlorobenzene	GC	612	.		
	GC/MS	625.1, 1625B	6410 B–2000		See footnote,[9] p. 27.
64. Hexachlorobutadiene	GC	612	.		
	GC/MS	625.1, 1625B	6410 B–2000		See footnote,[9] p. 27.
65. Hexachlorocyclopentadiene	GC	612	.		
	GC/MS	625.1,[5] 1625B	6410 B–2000		See footnote,[9] p. 27.
66. 1,2,3,4,7,8-Hexachloro-dibenzofuran.	GC/MS	1613B	.		
67. 1,2,3,6,7,8-Hexachloro-dibenzofuran.	GC/MS	1613B	.		
68. 1,2,3,7,8,9-Hexachloro-dibenzofuran.	GC/MS	1613B	.		
69. 2,3,4,6,7,8-Hexachloro-dibenzofuran.	GC/MS	1613B	.		
70. 1,2,3,4,7,8-Hexachloro-dibenzo-*p*-dioxin.	GC/MS	1613B	.		
71. 1,2,3,6,7,8-Hexachloro-dibenzo-*p*-dioxin.	GC/MS	1613B	.		
72. 1,2,3,7,8,9-Hexachloro-dibenzo-*p*-dioxin.	GC/MS	1613B	.		
73. Hexachloroethane	GC	612	.		
	GC/MS	625.1, 1625B	6410 B–2000		See footnote,[9] p. 27.
74. Indeno(1,2,3-c,d) pyrene	GC	610	.		
	GC/MS	625.1, 1625B	6410 B–2000		See footnote,[9] p. 27.
	HPLC	610	6440 B–2005	D4657–92 (98).	
75. Isophorone	GC	609	.		
	GC/MS	625.1, 1625B	6410 B–2000		See footnote,[9] p. 27.
76. Methylene chloride	GC	601	6200 C–2011		See footnote,[3] p. 130.
	GC/MS	624.1, 1624B	6200 B–2011.		
77. 2-Methyl-4,6-dinitrophenol	GC	604	6420 B–2000.		
	GC/MS	625.1, 1625B	6410 B–2000		See footnote,[9] p. 27.

TABLE IC—LIST OF APPROVED TEST PROCEDURES FOR NON-PESTICIDE ORGANIC COMPOUNDS—Continued

Parameter [1]	Method	EPA [2 7]	Standard methods	ASTM	Other
78. Naphthalene	GC	610	.		
	GC/MS	625.1, 1625B	6410 B–2000		See footnote,[9] p. 27.
	HPLC	610	6440 B–2005.		
79. Nitrobenzene	GC	609	.		
	GC/MS	625.1, 1625B	6410 B–2000		See footnote,[9] p. 27.
	HPLC			D4657–92 (98).	
80. 2-Nitrophenol	GC	604	6420 B–2000.		
	GC/MS	625.1, 1625B	6410 B–2000		See footnote,[9] p. 27.
81. 4-Nitrophenol	GC	604	6420 B–2000.		
	GC/MS	625.1, 1625B	6410 B–2000		See footnote,[9] p. 27.
82. N-Nitrosodimethylamine	GC	607	.		
	GC/MS	625.1,[5] 1625B	6410 B–2000		See footnote,[9] p. 27.
83. N-Nitrosodi-n-propylamine	GC	607	.		
	GC/MS	625.1,[5] 1625B	6410 B–2000		See footnote,[9] p. 27.
84. N-Nitrosodiphenylamine	GC	607	.		
	GC/MS	625.1,[5] 1625B	6410 B–2000		See footnote,[9] p. 27.
85. Octachlorodibenzofuran	GC/MS	1613B [10]	.		
86. Octachlorodibenzo-*p*-dioxin	GC/MS	1613B [10]	.		
87. 2,2'-oxybis(1-chloropropane) [12] [also known as bis(2-Chloro-1-methylethyl) ether].	GC	611	.		
	GC/MS	625.1, 1625B	6410 B–2000		See footnote,[9] p. 27.
88. PCB–1016	GC	608.3			See footnote,[3] p. 43; See footnote.[8]
	GC/MS	625.1	6410 B–2000.		
89. PCB–1221	GC	608.3			See footnote,[3] p. 43; See footnote.[8]
	GC/MS	625.1	6410 B–2000.		
90. PCB–1232	GC	608.3			See footnote,[3] p. 43; See footnote.[8]
	GC/MS	625.1	6410 B–2000.		
91. PCB–1242	GC	608.3			See footnote,[3] p. 43; See footnote.[8]
	GC/MS	625.1	6410 B–2000.		
92. PCB–1248	GC	608.3			See footnote,[3] p. 43; See footnote.[8]
	GC/MS	625.1	6410 B–2000.		
93. PCB–1254	GC	608.3			See footnote,[3] p. 43; See footnote.[8]

	GC/MS	625.1	6410 B–2000.		
94. PCB–1260	GC	608.3			See footnote,[3] p. 43; See footnote.[8]
	GC/MS	625.1	6410 B–2000.		
95. 1,2,3,7,8-Pentachloro-dibenzofuran.	GC/MS	1613B	.		
96. 2,3,4,7,8-Pentachloro-dibenzofuran.	GC/MS	1613B	.		
97. 1,2,3,7,8,-Pentachloro-dibenzo-*p*-dioxin.	GC/MS	1613B	.		
98. Pentachlorophenol	GC	604	6420 B–2000		See footnote,[3] p. 140.
	GC/MS	625.1, 1625B	6410 B–2000		See footnote,[9] p. 27.
99. Phenanthrene	GC	610	.		
	GC/MS	625.1, 1625B	6410 B–2000		See footnote,[9] p. 27.
	HPLC	610	6440 B–2005	D4657–92 (98).	
100. Phenol	GC	604	6420 B–2000.		
	GC/MS	625.1, 1625B	6410 B–2000		See footnote,[9] p. 27.
101. Pyrene	GC	610	.		
	GC/MS	625.1, 1625B	6410 B–2000		See footnote,[9] p. 27.
	HPLC	610	6440 B–2005	D4657–92 (98).	
102. 2,3,7,8-Tetrachloro-dibenzofuran.	GC/MS	1613B [10]	.		
103. 2,3,7,8-Tetrachloro-dibenzo-*p*-dioxin.	GC/MS	613, 625.1,[5a] 1613B.	.		
104. 1,1,2,2-Tetrachloroethane	GC	601	6200 C–2011		See footnote,[3] p. 130.
	GC/MS	624.1, 1624B	6200 B–2011.		
105. Tetrachloroethene	GC	601	6200 C–2011		See footnote,[3] p. 130.
	GC/MS	624.1, 1624B	6200 B–2011.		
106. Toluene	GC	602	6200 C–2011.		
	GC/MS	624.1, 1624B	6200 B–2011.		
107. 1,2,4-Trichlorobenzene	GC	612			See footnote,[3] p. 130.
	GC/MS	625.1, 1625B	6410 B–2000		See footnote,[9] p. 27.
108. 1,1,1-Trichloroethane	GC	601	6200 C–2011.		
	GC/MS	624.1, 1624B	6200 B–2011.		
109. 1,1,2-Trichloroethane	GC	601	6200 C–2011		See footnote,[3] p. 130.
	GC/MS	624.1, 1624B	6200 B–2011.		
110. Trichloroethene	GC	601	6200 C–2011.		
	GC/MS	624.1, 1624B	6200 B–2011.		
111. Trichlorofluoromethane	GC	601	6200 C–2011.		
	GC/MS	624.1	6200 B–2011.		
112. 2,4,6-Trichlorophenol	GC	604	6420 B–2000.		
	GC/MS	625.1, 1625B	6410 B–2000		See footnote,[9] p. 27.
113. Vinyl chloride	GC	601	6200 C–2011.		
	GC/MS	624.1, 1624B	6200 B–2011.		

TABLE IC—LIST OF APPROVED TEST PROCEDURES FOR NON-PESTICIDE ORGANIC COMPOUNDS—Continued

Parameter [1]	Method	EPA [2 7]	Standard methods	ASTM	Other
114. Nonylphenol	GC/MS			D7065–11.	
115. Bisphenol A (BPA)	GC/MS			D7065–11.	
116. *p-tert*-Octylphenol (OP)	GC/MS			D7065–11.	
117. Nonylphenol Monoethoxylate (NP1EO).	GC/MS			D7065–11.	
118. Nonylphenol Diethoxylate (NP2EO).	GC/MS			D7065–11.	
119. Adsorbable Organic Halides (AOX).	Adsorption and Coulometric Titration.	1650 [11]	.		
120. Chlorinated Phenolics	In Situ Acetylation and GC/MS.	1653 [11].			

Table IC notes:

[1] All parameters are expressed in micrograms per liter (μg/L) except for Method 1613B, in which the parameters are expressed in picograms per liter (pg/L).

[2] The full text of Methods 601–613, 1613B, 1624B, and 1625B are provided at appendix A, Test Procedures for Analysis of Organic Pollutants. The standardized test procedure to be used to determine the method detection limit (MDL) for these test procedures is given at appendix B of this part, Definition and Procedure for the Determination of the Method Detection Limit. These methods are available at: *https://www.epa.gov/cwa-methods* as individual PDF files.

[3] Methods for Benzidine: Chlorinated Organic Compounds, Pentachlorophenol and Pesticides in Water and Wastewater. September 1978. U.S. EPA.

[4] Method 624.1 may be used for quantitative determination of acrolein and acrylonitrile, provided that the laboratory has documentation to substantiate the ability to detect and quantify these analytes at levels necessary to comply with any associated regulations. In addition, the use of sample introduction techniques other than simple purge-and-trap may be required. QC acceptance criteria from Method 603 should be used when analyzing samples for acrolein and acrylonitrile in the absence of such criteria in Method 624.1.

[5] Method 625.1 may be extended to include benzidine, hexachlorocyclopentadiene, N-nitrosodimethylamine, N-nitrosodi-n-propylamine, and N-nitrosodiphenylamine. However, when they are known to be present, Methods 605, 607, and 612, or Method 1625B, are preferred methods for these compounds.

[5a] Method 625.1 screening only.

[6] Selected Analytical Methods Approved and Cited by the United States Environmental Protection Agency, Supplement to the 15th Edition of *Standard Methods for the Examination of Water and Wastewater.* 1981. American Public Health Association (APHA).

[7] Each analyst must make an initial, one-time demonstration of their ability to generate acceptable precision and accuracy with Methods 601–603, 1624B, and 1625B in accordance with procedures each in Section 8.2 of each of these Methods. Additionally, each laboratory, on an on-going basis must spike and analyze 10% (5% for Methods 624.1 and 625.1 and 100% for methods 1624B and 1625B) of all samples to monitor and evaluate laboratory data quality in accordance with Sections 8.3 and 8.4 of these methods. When the recovery of any parameter falls outside the quality control (QC) acceptance criteria in the pertinent method, analytical results for that parameter in the unspiked sample are suspect. The results should be reported but cannot be used to demonstrate regulatory compliance. If the method does not contain QC acceptance criteria, control limits of ± three standard deviations around the mean of a minimum of five replicate measurements must be used. These quality control requirements also apply to the Standard Methods, ASTM Methods, and other methods cited.

[8] Organochlorine Pesticides and PCBs in Wastewater Using Empore™ Disk. Revised October 28, 1994. 3M Corporation.

[9] Method O–3116–87 is in Open File Report 93–125, Methods of Analysis by U.S. Geological Survey National Water Quality Laboratory—Determination of Inorganic and Organic Constituents in Water and Fluvial Sediments. 1993. USGS.

[10] Analysts may use Fluid Management Systems, Inc. Power-Prep system in place of manual cleanup provided the analyst meets the requirements of Method 1613B (as specified in Section 9 of the method) and permitting authorities. Method 1613, Revision B, Tetra- through Octa-Chlorinated Dioxins and Furans by Isotope Dilution HRGC/HRMS. Revision B, 1994. U.S. EPA. The full text of this method is provided in appendix A to this part and at *https://www.epa.gov/cwa-methods/approved-cwa-methods-organic-compounds*.

[11] Method 1650, Adsorbable Organic Halides by Adsorption and Coulometric Titration. Revision C, 1997 U.S. EPA. Method 1653, Chlorinated Phenolics in Wastewater by In Situ Acetylation and GCMS. Revision A, 1997 U.S. EPA. The full text for both of these methods is provided at appendix A in part 430 of this chapter, The Pulp, Paper, and Paperboard Point Source Category.

[12] The compound was formerly inaccurately labeled as 2,2'-oxybis(2-chloropropane) and bis(2-chloroisopropyl) ether. Some versions of Methods 611, and 1625 inaccurately list the analyte as "bis(2-chloroisopropyl)ether," but use the correct CAS number of 108–60–1.

TABLE ID—LIST OF APPROVED TEST PROCEDURES FOR PESTICIDES [1]

Parameter	Method	EPA [2 7 10]	Standard methods	ASTM	Other
1. Aldrin	GC	617, 608.3	6630 B–2007 & C–2007	D3086–90, D5812–96 (02).	See footnote,[3] p. 7; See footnote,[4] O–3104–83; See footnote,[8] 3M0222.
	GC/MS	625.1	6410 B–2000.		
2. Ametryn	GC	507, 619			See footnote,[3] p. 83; See footnote,[9] O–3106–93; See footnote,[6] p. S68.
	GC/MS	525.2, 625.1			See footnote,[14] O–1121–91.
3. Aminocarb	TLC				See footnote,[3] p. 94; See footnote,[6] p. S60.
	HPLC	632.			
4. Atraton	GC	619			See footnote,[3] p. 83; See footnote,[6] p. S68.
	GC/MS	625.1.			
5. Atrazine	GC	507, 619, 608.3			See footnote,[3] p. 83; See footnote,[6] p. S68; See footnote,[9] O–3106–93.
	HPLC/MS				See footnote,[12] O–2060–01.
	GC/MS	525.1, 525.2, 625.1			See footnote,[11] O–1126–95.
6. Azinphos methyl	GC	614, 622, 1657			See footnote,[3] p. 25; See footnote,[6] p. S51.
	GC/MS	625.1			See footnote,[11] O–1126–95.
7. Barban	TLC				See footnote,[3] p. 104; See footnote,[6] p. S64.
	HPLC	632.			
	GC/MS	625.1.			
8. α-BHC	GC	617, 608.3	6630 B–2007 & C–2007	D3086–90, D5812–96(02).	See footnote,[3] p. 7; See footnote,[8] 3M0222.
	GC/MS	625.1[5]	6410 B–2000		See footnote,[11] O–1126–95.
9. β-BHC	GC	617, 608.3	6630 B–2007 & C–2007	D3086–90, D5812–96(02).	See footnote,[8] 3M0222.
	GC/MS	625.1	6410 B–2000.		
10. δ-BHC	GC	617, 608.3	6630 B–2007 & C–2007	D3086–90, D5812–96(02).	See footnote,[8] 3M0222.

TABLE ID—LIST OF APPROVED TEST PROCEDURES FOR PESTICIDES[1]—Continued

Parameter	Method	EPA[2 7 10]	Standard methods	ASTM	Other
	GC/MS	625.1	6410 B–2000.		
11. γ-BHC (Lindane)	GC	617, 608.3	6630 B–2007 & C–2007	D3086–90, D5812–96(02).	See footnote,[3] p. 7; See footnote,[4] O–3104–83; See footnote,[8] 3M0222.
	GC/MS	625.1[5]	6410 B–2000		See footnote,[11] O–1126–95.
12. Captan	GC	617, 608.3	6630 B–2007	D3086–90, D5812–96(02).	See footnote,[3] p. 7.
13. Carbaryl	TLC				See footnote,[3] p. 94, See footnote,[6] p. S60.
	HPLC	531.1, 632.			
	HPLC/MS	553			See footnote,[12] O–2060–01.
	GC/MS	625.1			See footnote,[11] O–1126–95.
14. Carbophenothion	GC	617, 608.3	6630 B–2007		See footnote,[4] page 27; See footnote,[6] p. S73.
	GC/MS	625.1.			
15. Chlordane	GC	617, 608.3	6630 B–2007 & C–2007	D3086–90, D5812–96(02).	See footnote,[3] p. 7; See footnote,[4] O–3104–83; See footnote,[8] 3M0222.
	GC/MS	625.1	6410 B–2000.		
16. Chloropropham	TLC				See footnote,[3] p. 104; See footnote,[6] p. S64.
	HPLC	632.			
	GC/MS	625.1.			
17. 2,4-D	GC	615	6640 B–2006		See footnote,[3] p. 115; See footnote,[4] O–3105–83.
	HPLC/MS				See footnote,[12] O–2060–01.
18. 4,4′-DDD	GC	617, 608.3	6630 B–2007 & C–2007	D3086–90, D5812–96(02).	See footnote,[3] p. 7; See footnote,[4] O–3105–83; See footnote,[8] 3M0222.
	GC/MS	625.1	6410 B–2000.		
19. 4,4′-DDE	GC	617, 608.3	6630 B–2007 & C–2007	D3086–90, D5812–96(02).	See footnote,[3] p. 7; See footnote,[4] O–3104–83; See footnote,[8] 3M0222.
	GC/MS	625.1	6410 B–2000		See footnote,[11] O–1126–95.
20. 4,4′-DDT	GC	617, 608.3	6630 B–2007 & C–2007	D3086–90, D5812–96(02).	See footnote,[3] p. 7; See footnote,[4] O–3104–83; See footnote,[8] 3M0222.
	GC/MS	625.1	6410 B–2000.		
21. Demeton-O	GC	614, 622			See footnote,[3] p. 25; See footnote,[6] p. S51.

	GC/MS	625.1.			
22. Demeton-S	GC	614, 622			See footnote,[3] p. 25; See footnote,[6] p. S51.
	GC/MS	625.1.			
23. Diazinon	GC	507, 614, 622, 1657			See footnote,[3] p. 25; See footnote,[4] O–3104–83; See footnote,[6] p. S51.
	GC/MS	525.2, 625.1			See footnote,[11] O–1126–95.
24. Dicamba	GC	615			See footnote,[3] p. 115.
	HPLC/MS				See footnote,[12] O–2060–01.
25. Dichlofenthion	GC	622.1			See footnote,[4] page 27; See footnote,[6] p. S73.
26. Dichloran	GC	608.2, 617, 608.3	6630 B–2007		See footnote,[3] p. 7.
27. Dicofol	GC	617, 608.3			See footnote,[4] O–3104–83.
28. Dieldrin	GC	617, 608.3	6630 B–2007 & C–2007	D3086–90, D5812–96(02).	See footnote,[3] p. 7; See footnote,[4] O–3104–83; See footnote,[8] 3M0222.
	GC/MS	625.1	6410 B–2000		See footnote,[11] O–1126–95.
29. Dioxathion	GC	614.1, 1657			See footnote,[4] page 27; See footnote,[6] p. S73.
30. Disulfoton	GC	507, 614, 622, 1657			See footnote,[3] p. 25; See footnote,[6] p. S51.
	GC/MS	525.2, 625.1			See footnote,[11] O–1126–95.
31. Diuron	TLC				See footnote,[3] p. 104; See footnote,[6] p. S64.
	HPLC	632.			
	HPLC/MS	553			See footnote,[12] O–2060–01.
32. Endosulfan I	GC	617, 608.3	6630 B–2007 & C–2007	D3086–90, D5812–96(02).	See footnote,[3] p. 7; See footnote,[4] O–3104–83; See footnote,[8] 3M0222).
	GC/MS	625.1[5]	6410 B–2000		See footnote,[13] O–2002–01.
33. Endosulfan II	GC	617, 608.3	6630 B–2007 & C–2007	D3086–90, D5812–96(02).	See footnote,[3] p. 7; See footnote,[8] 3M0222.
	GC/MS	625.1[5]	6410 B–2000		See footnote,[13] O–2002–01.
34. Endosulfan Sulfate	GC	617, 608.3	6630 C–2007		See footnote,[8] 3M0222.
	GC/MS	625.1	6410 B–2000.		
35. Endrin	GC	505, 508, 617, 1656, 608.3.	6630 B–2007 & C–2007	D3086–90, D5812–96(02).	See footnote,[3] p. 7; See footnote,[4] O–3104–83; See footnote,[8] 3M0222.
	GC/MS	525.1, 525.2, 625.1[5]	6410 B–2000.		
36. Endrin aldehyde	GC	617, 608.3	6630 C–2007		See footnote,[8] 3M0222.
	GC/MS	625.1.			
37. Ethion	GC	614, 614.1, 1657			See footnote,[4] page 27; See footnote,[6] p. S73.

TABLE ID—LIST OF APPROVED TEST PROCEDURES FOR PESTICIDES [1]—Continued

Parameter	Method	EPA [2 7 10]	Standard methods	ASTM	Other
	GC/MS	625.1			See footnote,[13] O–2002–01.
38. Fenuron	TLC				See footnote,[3] p. 104; See footnote,[6] p. S64.
	HPLC	632.			
	HPLC/MS				See footnote,[12] O–2060–01.
39. Fenuron-TCA	TLC				See footnote,[3] p. 104; See footnote,[6] p. S64.
	HPLC	632.			
40. Heptachlor	GC	505, 508, 617, 1656, 608.3.	6630 B–2007 & C–2007	D3086–90, D5812–96(02).	See footnote,[3] p. 7; See footnote,[4] O–3104–83; See footnote,[8] 3M0222.
	GC/MS	525.1, 525.2, 625.1	6410 B–2000.		
41. Heptachlor epoxide	GC	617, 608.3	6630 B–2007 & C–2007	D3086–90, D5812–96(02).	See footnote,[3] p. 7; See footnote,[4] O–3104–83; See footnote,[6] p. S73; See footnote,[8] 3M0222.
	GC/MS	625.1	6410 B–2000.		
42. Isodrin	GC	617, 608.3	6630 B–2007 & C–2007		See footnote,[4] O–3104–83; See footnote,[6] p. S73.
	GC/MS	625.1.			
43. Linuron	GC				See footnote,[3] p. 104; See footnote,[6] p. S64.
	HPLC	632.			
	HPLC/MS	553			See footnote,[12] O–2060–01.
	GC/MS				See footnote,[11] O–1126–95.
44. Malathion	GC	614, 1657	6630 B–2007		See footnote,[3] p. 25; See footnote,[6] p. S51.
	GC/MS	625.1			See footnote,[11] O–1126–95.
45. Methiocarb	TLC				See footnote,[3] p. 94; See footnote,[6] p. S60.
	HPLC	632.			
	HPLC/MS				See footnote,[12] O–2060–01.
46. Methoxychlor	GC	505, 508, 608.2, 617, 1656, 608.3.	6630 B–2007 & C–2007	D3086–90, D5812–96(02).	See footnote,[3] p. 7; See footnote,[4] O–3104–83; See footnote,[8] 3M0222.
	GC/MS	525.1, 525.2, 625.1			See footnote,[11] O–1126–95.
47. Mexacarbate	TLC				See footnote,[3] p. 94; See footnote,[6] p. S60.
	HPLC	632.			
	GC/MS	625.1.			

48. Mirex	GC	617, 608.3	6630 B–2007 & C–2007	D3086–90, D5812–96(02).	See footnote,[3] p. 7; See footnote,[4] O–3104–83.
	GC/MS	625.1.			
49. Monuron	TLC				See footnote,[3] p. 104; See footnote,[6] p. S64.
	HPLC	632.			
50. Monuron-TCA	TLC				See footnote,[3] p. 104; See footnote,[6] p. S64.
	HPLC	632.			
51. Neburon	TLC				See footnote,[3] p. 104; See footnote,[6] p. S64.
	HPLC	632.			
	HPLC/MS				See footnote,[12] O–2060–01.
52. Parathion methyl	GC	614, 622, 1657	6630 B–2007		See footnote,[4] page 27; See footnote,[3] p. 25.
	GC/MS	625.1			See footnote,[11] O–1126–95.
53. Parathion ethyl	GC	614	6630 B–2007		See footnote,[4] page 27; See footnote,[3] p. 25.
	GC/MS				See footnote,[11] O–1126–95.
54. PCNB	GC	608.1, 617, 608.3	6630 B–2007 & C–2007	D3086–90, D5812–96(02).	See footnote,[3] p. 7.
55. Perthane	GC	617, 608.3		D3086–90, D5812–96(02).	See footnote,[4] O–3104–83.
56. Prometon	GC	507, 619			See footnote,[3] p. 83; See footnote,[6] p. S68; See footnote,[9] O–3106–93.
	GC/MS	525.2, 625.1			See footnote,[11] O–1126–95.
57. Prometryn	GC	507, 619			See footnote,[3] p. 83; See footnote,[6] p. S68; See footnote,[9] O–3106–93.
	GC/MS	525.1, 525.2, 625.1			See footnote,[13] O–2002–01.
58. Propazine	GC	507, 619, 1656, 608.3			See footnote,[3] p. 83; See footnote,[6] p. S68; See footnote,[9] O–3106–93.
	GC/MS	525.1, 525.2, 625.1.			
59. Propham	TLC				See footnote,[3] p. 104; See footnote,[6] p. S64.
	HPLC	632.			
	HPLC/MS				See footnote,[12] O–2060–01.
60. Propoxur	TLC				See footnote,[3] p. 94; See footnote,[6] p. S60.
	HPLC	632.			
61. Secbumeton	TLC				See footnote,[3] p. 83; See footnote,[6] p. S68.

TABLE ID—LIST OF APPROVED TEST PROCEDURES FOR PESTICIDES[1]—Continued

Parameter	Method	EPA[2 7 10]	Standard methods	ASTM	Other
	GC	619.			
62. Siduron	TLC				See footnote,[3] p. 104; See footnote,[6] p. S64.
	HPLC	632.			
	HPLC/MS				See footnote,[12] O–2060–01.
63. Simazine	GC	505, 507, 619, 1656, 608.3.			See footnote,[3] p. 83; See footnote,[6] p. S68; See footnote,[9] O–3106–93.
	GC/MS	525.1, 525.2, 625.1			See footnote,[11] O–1126–95.
64. Strobane	GC	617, 608.3	6630 B–2007 & C–2007		See footnote,[3] p. 7.
65. Swep	TLC				See footnote,[3] p. 104; See footnote,[6] p. S64.
	HPLC	632.			
66. 2,4,5-T	GC	615	6640 B–2006		See footnote,[3] p. 115; See footnote,[4] O–3105–83.
67. 2,4,5-TP (Silvex)	GC	615	6640 B–2006		See footnote,[3] p. 115; See footnote,[4] O–3105–83.
68. Terbuthylazine	GC	619, 1656, 608.3			See footnote,[3] p. 83; See footnote,[6] p. S68.
	GC/MS				See footnote,[13] O–2002–01.
69. Toxaphene	GC	505, 508, 617, 1656, 608.3.	6630 B–2007 & C–2007	D3086–90, D5812–96(02).	See footnote,[3] p. 7; See footnote;[8] See footnote,[4] O–3105–83.
	GC/MS	525.1, 525.2, 625.1	6410 B–2000.		
70. Trifluralin	GC	508, 617, 627, 1656, 608.3.	6630 B–2007		See footnote,[3] p. 7; See footnote,[9] O–3106–93.
	GC/MS	525.2, 625.1			See footnote,[11] O–1126–95.

Table ID notes:

[1] Pesticides are listed in this table by common name for the convenience of the reader. Additional pesticides may be found under Table IC of this section, where entries are listed by chemical name.

[2] The standardized test procedure to be used to determine the method detection limit (MDL) for these test procedures is given at appendix B of this part, Definition and Procedure for the Determination of the Method Detection Limit.

[3] Methods for Benzidine, Chlorinated Organic Compounds, Pentachlorophenol and Pesticides in Water and Wastewater. September 1978. U.S. EPA. This EPA publication includes thin-layer chromatography (TLC) methods.

[4] Methods for the Determination of Organic Substances in Water and Fluvial Sediments, Techniques of Water-Resources Investigations of the U.S. Geological Survey, Book 5, Chapter A3. 1987. USGS.

[5] The method may be extended to include α-BHC, γ-BHC, endosulfan I, endosulfan II, and endrin. However, when they are known to exist, Method 608.3 is the preferred method.

[6] Selected Analytical Methods Approved and Cited by the United States Environmental Protection Agency, Supplement to the 15th Edition of *Standard Methods for the Examination of Water and Wastewater.* 1981. American Public Health Association (APHA).

[7] Each analyst must make an initial, one-time, demonstration of their ability to generate acceptable precision and accuracy with Methods 608.3 and 625.1 in accordance with procedures given in Section 8.2 of each of these methods. Additionally, each laboratory, on an on-going basis, must spike and analyze 5% of all samples analyzed with Method 608.3 or 5% of all samples analyzed with Method 625.1 to monitor and evaluate laboratory data quality in accordance with Sections 8.3 and 8.4 of these methods. When the recovery of any parameter falls outside the warning limits, the analytical results for that parameter in the unspiked sample are suspect. The results should be reported, but cannot be used to demonstrate regulatory compliance. These quality control requirements also apply to the Standard Methods, ASTM Methods, and other methods cited.

[8] Organochlorine Pesticides and PCBs in Wastewater Using Empore™ Disk. Revised October 28, 1994. 3M Corporation.

[9] Method O–3106–93 is in Open File Report 94–37, Methods of Analysis by the U.S. Geological Survey National Water Quality Laboratory—Determination of Triazine and Other Nitrogen-Containing Compounds by Gas Chromatography With Nitrogen Phosphorus Detectors. 1994. USGS.

[10] EPA Methods 608.1, 608.2, 614, 614.1, 615, 617, 619, 622, 622.1, 627, and 632 are found in Methods for the Determination of Nonconventional Pesticides in Municipal and Industrial Wastewater, EPA 821–R–92–002, April 1992, U.S. EPA. EPA Methods 505, 507, 508, 525.1, 531.1 and 553 are in Methods for the Determination of Nonconventional Pesticides in Municipal and Industrial Wastewater, Volume II, EPA 821–R–93–010B, 1993, U.S. EPA. EPA Method 525.2 is in Determination of Organic Compounds in Drinking Water by Liquid-Solid Extraction and Capillary Column Gas Chromatography/Mass Spectrometry, Revision 2.0, 1995, U.S. EPA. EPA methods 1656 and 1657 are in Methods for the Determination of Nonconventional Pesticides in Municipal and Industrial Wastewater, Volume I, EPA 821–R–93–010A, 1993, U.S. EPA. Methods 608.3 and 625.1 are available at *https://www.epa.gov/cwa-methods/approved-cwa-test-methods-organic-compounds*.

[11] Method O–1126–95 is in Open-File Report 95–181, Methods of Analysis by the U.S. Geological Survey National Water Quality Laboratory—Determination of pesticides in water by C–18 solid-phase extraction and capillary-column gas chromatography/mass spectrometry with selected-ion monitoring. 1995. USGS.

[12] Method O–2060–01 is in Water-Resources Investigations Report 01–4134, Methods of Analysis by the U.S. Geological Survey National Water Quality Laboratory—Determination of Pesticides in Water by Graphitized Carbon-Based Solid-Phase Extraction and High-Performance Liquid Chromatography/Mass Spectrometry. 2001. USGS.

[13] Method O–2002–01 is in Water-Resources Investigations Report 01–4098, Methods of Analysis by the U.S. Geological Survey National Water Quality Laboratory—Determination of moderate-use pesticides in water by C–18 solid-phase extraction and capillary-column gas chromatography/mass spectrometry. 2001. USGS.

[14] Method O–1121–91 is in Open-File Report 91–519, Methods of Analysis by the U.S. Geological Survey National Water Quality Laboratory—Determination of organonitrogen herbicides in water by solid-phase extraction and capillary-column gas chromatography/mass spectrometry with selected-ion monitoring. 1992. USGS.

TABLE IE—LIST OF APPROVED RADIOLOGIC TEST TEST PROCEDURES

Parameter and units	Method	Reference (method number or page)				
		EPA [1]	Standard Methods 18th, 19th, 20th Ed.	Standard Methods On-line	ASTM	USGS [2]
1. Alpha-Total, pCi per liter	Proportional or scintillation counter.	900.0	7110 B	7110 B–00	D1943–90, 96	pp. 75 and 78 [3]
2. Alpha-Counting error, pCi per liter.	Proportional or scintillation counter.	Appendix B	7110 B	7110 B–00	D1943–90, 96	p. 79
3. Beta-Total, pCi per liter	Proportional counter	900.0	7110 B	7110 B–00	D1890–90, 96	pp. 75 and 78 [3]
4. Beta-Counting error, pCi	Proportional counter	Appendix B	7110 B	7110 B–00	D1890–90, 96	p. 79
5. (a) Radium Total pCi per liter.	Proportional counter	903.0	7500-Ra B	7500-Ra B–01	D2460–90, 97.	
(b) Ra, pCi per liter	Scintillation counter	903.1	7500-Ra C	7500-Ra C–01	D3454–91, 97	p. 81

[1] Prescribed Procedures for Measurement of Radioactivity in Drinking Water, EPA–600/4–80–032 (1980), U.S. Environmental Protection Agency, August 1980.

[2] Fishman, M. J. and Brown, Eugene, ''Selected Methods of the U.S. Geological Survey of Analysis of Wastewaters,'' U.S. Geological Survey, Open-File Report 76–177 (1976).

[3] The method found on p. 75 measures only the dissolved portion while the method on p. 78 measures only the suspended portion. Therefore, the two results must be added to obtain the ''total.''

TABLE IF—LIST OF APPROVED METHODS FOR PHARMACEUTICAL POLLUTANTS

Pharmaceuticals pollutants	CAS registry No.	Analytical method number
Acetonitrile	75–05–8	1666/1671/D3371/D3695/624.1
n-Amyl acetate	628–63–7	1666/D3695
n-Amyl alcohol	71–41–0	1666/D3695
Benzene	71–43–2	D4763/D3695/502.2/524.2/624.1
n-Butyl-acetate	123–86–4	1666/D3695
tert-Butyl alcohol	75–65–0	1666/624.1
Chlorobenzene	108–90–7	502.2/524.2/624.1
Chloroform	67–66–3	502.2/524.2/551/624.1
o-Dichlorobenzene	95–50–1	1625C/502.2/524.2/624.1
1,2-Dichloroethane	107–06–2	D3695/502.2/524.2/624.1
Diethylamine	109–89–7	1666/1671
Dimethyl sulfoxide	67–68–5	1666/1671
Ethanol	64–17–5	1666/1671/D3695/624.1
Ethyl acetate	141–78–6	1666/D3695/624.1
n-Heptane	142–82–5	1666/D3695
n-Hexane	110–54–3	1666/D3695
Isobutyraldehyde	78–84–2	1666/1667
Isopropanol	67–63–0	1666/D3695
Isopropyl acetate	108–21–4	1666/D3695
Isopropyl ether	108–20–3	1666/D3695
Methanol	67–56–1	1666/1671/D3695/624.1
Methyl Cellosolve® (2-Methoxy ethanol)	109–86–4	1666/1671
Methylene chloride	75–09–2	502.2/524.2/624.1
Methyl formate	107–31–3	1666
4-Methyl-2-pentanone (MIBK)	108–10–1	1624C/1666/D3695/D4763/524.2/624.1
Phenol	108–95–2	D4763
n-Propanol	71–23–8	1666/1671/D3695/624.1
2-Propanone (Acetone)	67–64–1	D3695/D4763/524.2/624.1
Tetrahydrofuran	109–99–9	1666/524.2/624.1
Toluene	108–88–3	D3695/D4763/502.2/524.2/624.1
Triethlyamine	121–44–8	1666/1671
Xylenes	(Note 1)	1624C/1666/624.1

Table IF note:
[1] 1624C: *m*-xylene 108–38–3, *o,p*-xylene, E–14095 (Not a CAS number; this is the number provided in the Environmental Monitoring Methods Index [EMMI] database.); 1666: m,p-xylene 136777–61–2, *o*-xylene 95–47–6.

TABLE IG—TEST METHODS FOR PESTICIDE ACTIVE INGREDIENTS

[40 CFR part 455]

EPA survey code	Pesticide name	CAS No.	EPA analytical method No.(s) [3]
8	Triadimefon	43121–43–3	507/633/525.1/525.2/1656/625.1.
12	Dichlorvos	62–73–7	1657/507/622/525.1/525.2/625.1.
16	2,4-D; 2,4-D Salts and Esters [2,4-Dichloro-phenoxyacetic acid].	94–75–7	1658/515.1/615/515.2/555.
17	2,4-DB; 2,4-DB Salts and Esters [2,4-Dichlorophenoxybutyric acid].	94–82–6	1658/515.1/615/515.2/555.
22	Mevinphos	7786–34–7	1657/507/622/525.1/525.2/625.1.
25	Cyanazine	21725–46–2	629/507/608.3/625.1.
26	Propachlor	1918–16–7	1656/508/608.1/525.1/525.2/608.3/625.1.
27	MCPA; MCPA Salts and Esters [2-Methyl-4-chlorophenoxyacetic acid]	94–74–6	1658/615/555.
30	Dichlorprop; Dichlorprop Salts and Esters [2-(2,4-Dichlorophenoxy) propionic acid].	120–36–5	1658/515.1/615/515.2/555.
31	MCPP; MCPP Salts and Esters [2-(2-Methyl-4-chlorophenoxy) propionic acid].	93–65–2	1658/615/555.
35	TCMTB [2-(Thiocyanomethylthio) benzo-thiazole].	21564–17–0	637.
39	Pronamide	23950–58–5	525.1/525.2/507/633.1/625.1.
41	Propanil	709–98–8	632.1/1656/608.3.
45	Metribuzin	21087–64–9	507/633/525.1/525.2/1656/608.3/625.1.
52	Acephate	30560–19–1	1656/1657/608.3.
53	Acifluorfen	50594–66–6	515.1/515.2/555.
54	Alachlor	15972–60–8	505/507/645/525.1/525.2/1656/608.3/625.1.
55	Aldicarb	116–06–3	531.1.
58	Ametryn	834–12–8	507/619/525.2/625.1.
60	Atrazine	1912–24–9	505/507/619/525.1/525.2/1656/ 608.3/625.1.
62	Benomyl	17804–35–2	631.

TABLE IG—TEST METHODS FOR PESTICIDE ACTIVE INGREDIENTS—Continued

[40 CFR part 455]

EPA survey code	Pesticide name	CAS No.	EPA analytical method No.(s) [3]
68	Bromacil; Bromacil Salts and Esters	314–40–9	507/633/525.1/525.2/1656/608.3/625.1.
69	Bromoxynil	1689–84–5	1625/1661/625.1.
69	Bromoxynil Octanoate	1689–99–2	1656/608.3.
70	Butachlor	23184–66–9	507/645/525.1/525.2/1656/608.3/625.1.
73	Captafol	2425–06–1	1656/608.3/625.1.
75	Carbaryl [Sevin]	63–25–2	531.1/632/553/625.1.
76	Carbofuran	1563–66–2	531.1/632/625.1.
80	Chloroneb	2675–77–6	1656/508/608.1/525.1/525.2/608.3/625.1.
82	Chlorothalonil	1897–45–6	508/608.2/525.1/525.2/1656/608.3/625.1.
84	Stirofos	961–11–5	1657/507/622/525.1/525.2/625.1.
86	Chlorpyrifos	2921–88–2	1657/508/622/625.1.
90	Fenvalerate	51630–58–1	1660.
103	Diazinon	333–41–5	1657/507/614/622/525.2/625.1.
107	Parathion methyl	298–00–0	1657/614/622/625.1.
110	DCPA [Dimethyl 2,3,5,6-tetrachloro-terephthalate].	1861–32–1	508/608.2/525.1/525.2/515.1 [2]/515.2 [2]/1656/608.3/625.1.
112	Dinoseb	88–85–7	1658/515.1/615/515.2/555/625.1.
113	Dioxathion	78–34–2	1657/614.1.
118	Nabonate [Disodium cyanodithio-imidocarbonate].	138–93–2	630.1.
119	Diuron	330–54–1	632/553.
123	Endothall	145–73–3	548/548.1.
124	Endrin	72–20–8	1656/505/508/617/525.1/525.2/608.3/625.1.
125	Ethalfluralin	55283–68–6	1656/627/608.3 See footnote 1.
126	Ethion	563–12–2	1657/614/614.1/625.1.
127	Ethoprop	13194–48–4	1657/507/622/525.1/525.2/625.1.
132	Fenarimol	60168–88–9	507/633.1/525.1/525.2/1656/608.3/625.1.
133	Fenthion	55–38–9	1657/622/625.1.
138	Glyphosate [N-(Phosphonomethyl) glycine]	1071–83–6	547.
140	Heptachlor	76–44–8	1656/505/508/617/525.1/525.2/608.3/625.1.
144	Isopropalin	33820–53–0	1656/627/608.3.
148	Linuron	330–55–2	553/632.
150	Malathion	121–75–5	1657/614/625.1.
154	Methamidophos	10265–92–6	1657.
156	Methomyl	16752–77–5	531.1/632.
158	Methoxychlor	72–43–5	1656/505/508/608.2/617/525.1/525.2/608.3/625.1.
172	Nabam	142–59–6	630/630.1.
173	Naled	300–76–5	1657/622/625.1.
175	Norflurazon	27314–13–2	507/645/525.1/525.2/1656/608.3/625.1.
178	Benfluralin	1861–40–1	1656/627/608.3 See footnote 1.
182	Fensulfothion	115–90–2	1657/622/625.1.
183	Disulfoton	298–04–4	1657/507/614/622/525.2/625.1.
185	Phosmet	732–11–6	1657/622.1/625.1.
186	Azinphos Methyl	86–50–0	1657/614/622/625.1.
192	Organo-tin pesticides	12379–54–3	Ind-01/200.7/200.9.
197	Bolstar	35400–43–2	1657/622.
203	Parathion	56–38–2	1657/614/625.1.
204	Pendimethalin	40487–42–1	1656.
205	Pentachloronitrobenzene	82–68–8	1656/608.1/617/608.3/625.1.
206	Pentachlorophenol	87–86–5	1625/515.2/555/515.1/525.1/525.2/625.1.
208	Permethrin	52645–53–1	608.2/508/525.1/525.2/1656/1660/608.3 [4]/625.1 [4].
212	Phorate	298–02–2	1657/622/625.1.
218	Busan 85 [Potassium dimethyldithiocarbamate].	128–03–0	630/630.1.
219	Busan 40 [Potassium N-hydroxymethyl-N-methyldithiocarbamate].	51026–28–9	630/630.1.
220	KN Methyl [Potassium N-methyl-dithiocarbamate].	137–41–7	630/630.1.
223	Prometon	1610–18–0	507/619/525.2/625.1.
224	Prometryn	7287–19–6	507/619/525.1/525.2/625.1.
226	Propazine	139–40–2	507/619/525.1/525.2/1656/608.3/625.1.
230	Pyrethrin I	121–21–1	1660.
232	Pyrethrin II	121–29–9	1660.
236	DEF [S,S,S-Tributyl phosphorotrithioate]	78–48–8	1657.
239	Simazine	122–34–9	505/507/619/525.1/525.2/1656/608.3/625.1.
241	Carbam-S [Sodium dimethyldithio-carbamate].	128–04–1	630/630.1.

TABLE IG—TEST METHODS FOR PESTICIDE ACTIVE INGREDIENTS—Continued

[40 CFR part 455]

EPA survey code	Pesticide name	CAS No.	EPA analytical method No.(s) [3]
243	Vapam [Sodium methyldithiocarbamate]	137–42–8	630/630.1.
252	Tebuthiuron	34014–18–1	507/525.1/525.2/625.1.
254	Terbacil	5902–51–2	507/633/525.1/525.2/1656/608.3/625.1.
255	Terbufos	13071–79–9	1657/507/614.1/525.1/525.2/625.1.
256	Terbuthylazine	5915–41–3	619/1656/608.3.
257	Terbutryn	886–50–0	507/619/525.1/525.2/625.1.
259	Dazomet	533–74–4	630/630.1/1659.
262	Toxaphene	8001–35–2	1656/505/508/617/525.1/525.2/608.3/625.1.
263	Merphos [Tributyl phosphorotrithioate]	150–50–5	1657/507/525.1/525.2/622/625.1.
264	Trifluralin [1]	1582–09–8	1656/508/617/627/525.2/608.3/625.1.
268	Ziram [Zinc dimethyldithiocarbamate]	137–30–4	630/630.1.

Table IG notes:

[1] Monitor and report as total Trifluralin.

[2] Applicable to the analysis of DCPA degradates.

[3] EPA Methods 608.1 through 645, 1645 through 1661, and Ind-01 are available in Methods for the Determination of Nonconventional Pesticides in Municipal and Industrial Wastewater, Volume I, EPA 821–R–93–010A, Revision I, August 1993, U.S. EPA. EPA Methods 200.9 and 505 through 555 are available in Methods for the Determination of Nonconventional Pesticides in Municipal and Industrial Wastewater, Volume II, EPA 821–R–93–010B, August 1993, U.S. EPA. The full text of Methods 608.3, 625.1, and 1625 are provided at appendix A of this part. The full text of Method 200.7 is provided at appendix C of this part. Methods 608.3 and 625.1 are available at *https://www.epa.gov/cwa-methods/approved-cwa-test-methods-organic-compounds*.

[4] Permethrin is not listed within methods 608.3 and 625.1; however, *cis*-permethrin and *trans*-permethrin are listed. Permethrin can be calculated by adding the results of *cis*- and *trans*-permethrin.

TABLE IH—LIST OF APPROVED MICROBIOLOGICAL METHODS FOR AMBIENT WATER

Parameter and units	Method [1]	EPA	Standard methods	AOAC, ASTM, USGS	Other
Bacteria					
1. Coliform (fecal), number per 100 mL or number per gram dry weight.	Most Probable Number (MPN), 5 tube, 3 dilution, or.	p. 132 [3]	9221 C E–2006.		
	Membrane filter (MF),[2] single step.	p. 124 [3]	9222 D–2006 [27]	B–0050–85. [4]	
2. Coliform (fecal) in presence of chlorine, number per 100 mL.	MPN, 5 tube, 3 dilution, or.	p. 132 [3]	9221 C E–2006.		
	MF,[2] single step [5].	p. 124 [3]	9222 D–2006. [27]		
3. Coliform (total), number per 100 mL.	MPN, 5 tube, 3 dilution, or.	p. 114 [3]	9221 B–2006.		
	MF,[2] single step or two step.	p. 108 [3]	9222 B–2006	B–0025–85. [4]	
4. Coliform (total), in presence of chlorine, number per 100 mL.	MPN, 5 tube, 3 dilution, or.	p. 114 [3]	9221 B–2006.		
	MF [2] with enrichment.	p. 111 [3]	9222 B–2006.		
5. *E. coli,* number per 100 mL.	MPN,[6 8 14] multiple tube, or.		9221 B.2–2006/9221 F–2006 [11 13]		
	Multiple tube/multiple well, or.	9223 B–2004 [12]	991.15 [10]	Colilert® [12 16].	Colilert-18®. [12 15 16]

TABLE IH—LIST OF APPROVED MICROBIOLOGICAL METHODS FOR AMBIENT WATER—Continued

Parameter and units	Method [1]	EPA	Standard methods	AOAC, ASTM, USGS	Other
	MF,[2 5 6 7 8] two step, or.	1103.1 [19]	9222 B–2006/ 9222 G–2006,[18] 9213 D–2007.	D–5392–93. [9]	
	Single step	1603,[20] 1604 [21]			mColiBlue-24®.[17]
6. Fecal streptococci, number per 100 mL.	MPN, 5 tube, 3 dilution, or.	p. 139 [3]	9230 B–2007.		
	MF [2], or	p. 136 [3]	9230 C–2007	B–0055–85 [4].	
	Plate count	p. 143. [3]			
7. Enterococci, number per 100 mL.	MPN,[6 8] multiple tube/multiple well, or.		9230 D–2007	D6503–99 [9].	Enterolert®.[12 22]
	MF [2 5 6 7 8] two step, or.	1106.1 [23]	9230 C–2007	D5259–92. [9]	
	Single step, or	1600 [24]	9230 C–2007.		
	Plate count	p. 143. [3]			
Protozoa					
8. *Cryptosporidium*.	Filtration/IMS/FA.	1622, [25] 1623. [26]			
9. *Giardia*	Filtration/IMS/FA.	1623. [26]			

Table IH notes:

[1] The method must be specified when results are reported.

[2] A 0.45-μm membrane filter (MF) or other pore size certified by the manufacturer to fully retain organisms to be cultivated and to be free of extractables which could interfere with their growth.

[3] Microbiological Methods for Monitoring the Environment, Water, and Wastes. EPA/600/8–78/017. 1978. U.S. EPA.

[4] U.S. Geological Survey Techniques of Water-Resource Investigations, Book 5, Laboratory Analysis, Chapter A4, Methods for Collection and Analysis of Aquatic Biological and Microbiological Samples. 1989. USGS.

[5] Because the MF technique usually yields low and variable recovery from chlorinated wastewaters, the Most Probable Number method will be required to resolve any controversies.

[6] Tests must be conducted to provide organism enumeration (density). Select the appropriate configuration of tubes/filtrations and dilutions/volumes to account for the quality, character, consistency, and anticipated organism density of the water sample.

[7] When the MF method has not been used previously to test waters with high turbidity, large numbers of noncoliform bacteria, or samples that may contain organisms stressed by chlorine, a parallel test should be conducted with a multiple-tube technique to demonstrate applicability and comparability of results.

[8] To assess the comparability of results obtained with individual methods, it is suggested that side-by-side tests be conducted across seasons of the year with the water samples routinely tested in accordance with the most current Standard Methods for the Examination of Water and Wastewater or EPA alternate test procedure (ATP) guidelines.

[9] Annual Book of ASTM Standards—Water and Environmental Technology. Section 11.02. 2000, 1999, 1996. ASTM International.

[10] Official Methods of Analysis of AOAC International, 16th Edition, Volume I, Chapter 17. 1995. AOAC International.

[11] The multiple-tube fermentation test is used in 9221B.2–2006. Lactose broth may be used in lieu of lauryl tryptose broth (LTB), if at least 25 parallel tests are conducted between this broth and LTB using the water samples normally tested, and this comparison demonstrates that the false-positive rate and false-negative rate for total coliform using lactose broth is less than 10 percent. No requirement exists to run the completed phase on 10 percent of all total coliform-positive tubes on a seasonal basis.

[12] These tests are collectively known as defined enzyme substrate tests, where, for example, a substrate is used to detect the enzyme β-glucuronidase produced by *E. coli*.

[13] After prior enrichment in a presumptive medium for total coliform using 9221B.2–2006, all presumptive tubes or bottles showing any amount of gas, growth or acidity within 48 h ± 3 h of incubation shall be submitted to 9221F–2006. Commercially available EC–MUG media or EC media supplemented in the laboratory with 50 μg/mL of MUG may be used.

[14] Samples shall be enumerated by the multiple-tube or multiple-well procedure. Using multiple-tube procedures, employ an appropriate tube and dilution configuration of the sample as needed and report the Most Probable Number (MPN). Samples tested with Colilert® may be enumerated with the multiple-well procedures, Quanti-Tray® or Quanti-Tray®/2000, and the MPN calculated from the table provided by the manufacturer.

[15] Colilert-18® is an optimized formulation of the Colilert® for the determination of total coliforms and *E. coli* that provides results within 18 h of incubation at 35 °C, rather than the 24 h required for the Colilert® test, and is recommended for marine water samples.

[16] Descriptions of the Colilert®, Colilert-18®, and Quanti-Tray® may be obtained from IDEXX Laboratories Inc.

[17] A description of the mColiBlue24® test may be obtained from Hach Company.

[18] Subject total coliform positive samples determined by 9222B–2006 or other membrane filter procedure to 9222G–2006 using NA–MUG media.

[19] Method 1103.1: *Escherichia coli* (*E. coli*) in Water by Membrane Filtration Using membrane-Thermotolerant *Escherichia coli* Agar (mTEC), EPA–821–R–10–002. March 2010. U.S. EPA.

[20] Method 1603: *Escherichia coli* (*E. coli*) in Water by Membrane Filtration Using Modified membrane-Thermotolerant *Escherichia coli* Agar (Modified mTEC), EPA–821–R–14–010. September 2014. U.S. EPA.

[21] Preparation and use of MI agar with a standard membrane filter procedure is set forth in the article, Brenner et al. 1993. New Medium for the Simultaneous Detection of Total Coliform and *Escherichia coli* in Water. Appl. Environ. Microbiol. 59:3534–3544 and in Method 1604: Total Coliforms and *Escherichia coli* (*E. coli*) in Water by Membrane Filtration by Using a Simultaneous Detection Technique (MI Medium), EPA 821–R–02–024, September 2002, U.S. EPA.

[22] A description of the Enterolert® test may be obtained from IDEXX Laboratories Inc.

[23] Method 1106.1: Enterococci in Water by Membrane Filtration Using membrane-Enterococcus-Esculin Iron Agar (mE-EIA), EPA–821–R–09–015. December 2009. U.S. EPA.

[24] Method 1600: Enterococci in Water by Membrane Filtration Using membrane-Enterococcus Indoxyl-β-D-Glucoside Agar (mEI), EPA–821–R–14–011. September 2014. U.S. EPA.

[25] Method 1622 uses a filtration, concentration, immunomagnetic separation of oocysts from captured material, immunofluorescence assay to determine concentrations, and confirmation through vital dye staining and differential interference contrast microscopy for the detection of *Cryptosporidium*. Method 1622: *Cryptosporidium* in Water by Filtration/IMS/FA, EPA–821–R–05–001. December 2005. U.S. EPA.

[26] Method 1623 uses a filtration, concentration, immunomagnetic separation of oocysts and cysts from captured material, immunofluorescence assay to determine concentrations, and confirmation through vital dye staining and differential interference contrast microscopy for the simultaneous detection of *Cryptosporidium* and *Giardia* oocysts and cysts. Method 1623: *Cryptosporidium* and *Giardia* in Water by Filtration/IMS/FA. EPA–821–R–05–002. December 2005. U.S. EPA.

[27] On a monthly basis, at least ten blue colonies from the medium must be verified using Lauryl Tryptose Broth and EC broth, followed by count adjustment based on these results; and representative non-blue colonies should be verified using Lauryl Tryptose Broth. Where possible, verifications should be done from randomized sample sources.

(b) Certain material is incorporated by reference into this part with the approval of the Director of the Federal Register under 5 U.S.C. 552(a) and 1 CFR part 51. All approved material is available for inspection at EPA's Water Docket, EPA West, 1301 Constitution Avenue NW., Room 3334, Washington, DC 20004, Telephone: 202–566–2426, and is available from the sources listed below. It is also available for inspection at the National Archives and Records Administration (NARA). For information on the availability of this material at NARA, call 202–741–6030, or go to: *https://www.archives.gov/federal-register/cfr/ibr-locations.html*.

(1) Environmental Monitoring and Support Laboratory, U.S. Environmental Protection Agency, Cincinnati OH (US EPA). Available at *http://water.epa.gov/scitech/methods/cwa/index.cfm* or from: National Technical Information Service, 5285 Port Royal Road, Springfield, Virginia 22161

(i) Microbiological Methods for Monitoring the Environment, Water, and Wastes. 1978. EPA/600/8–78/017, Pub. No. PB–290329/A.S.

(A) Part III Analytical Methodology, Section B Total Coliform Methods, page 108. Table IA, Note 3; Table IH, Note 3.

(B) Part III Analytical Methodology, Section B Total Coliform Methods, 2.6.2 Two-Step Enrichment Procedure, page 111. Table IA, Note 3; Table IH, Note 3.

(C) Part III Analytical Methodology, Section B Total Coliform Methods, 4 Most Probable Number (MPN) Method, page 114. Table IA, Note 3; Table IH, Note 3.

(D) Part III Analytical Methodology, Section C Fecal Coliform Methods, 2 Direct Membrane Filter (MF) Method, page 124. Table IA, Note 3; Table IH, Note 3.

(E) Part III, Analytical Methodology, Section C Fecal Coliform Methods, 5 Most Probable Number (MPN) Method, page 132. Table IA, Note 3; Table IH, Note 3.

(F) Part III Analytical Methodology, Section D Fecal Streptococci, 2 Membrane Filter (MF) Method, page 136. Table IA, Note 3; Table IH, Note 3.

(G) Part III Analytical Methodology, Section D Fecal Streptococci, 4 Most Probable Number Method, page 139. Table IA, Note 3; Table IH, Note 3.

(H) Part III Analytical Methodology, Section D Fecal Streptococci, 5 Pour Plate Method, page 143. Table IA, Note 3; Table IH, Note 3.

(ii) [Reserved]

(2) Environmental Monitoring and Support Laboratory, U.S. Environmental Protection Agency, Cincinnati OH (US EPA). Available at *http://water.epa.gov/scitech/methods/cwa/index.cfm*.

(i) Method 300.1 (including Errata Cover Sheet, April 27, 1999), Determination of Inorganic Ions in Drinking Water by Ion Chromatography, Revision 1.0, 1997. Table IB, Note 52.

(ii) Method 551, Determination of Chlorination Disinfection Byproducts and Chlorinated Solvents in Drinking Water by Liquid-Liquid Extraction and Gas Chromatography With Electron-Capture Detection. 1990. Table IF.

(3) National Exposure Risk Laboratory-Cincinnati, U.S. Environmental Protection Agency, Cincinnati OH (US EPA). Available from *http://water.epa.gov/scitech/methods/cwa/index.cfm* or from the National Technical Information Service (NTIS), 5285 Port Royal Road, Springfield, VA 22161. Telephone: 800–553–6847.

(i) Methods for the Determination of Inorganic Substances in Environmental Samples. August 1993. EPA/600/R–93/100, Pub. No. PB 94120821. Table IB, Note 52.

(A) Method 180.1, Determination of Turbidity by Nephelometry. Revision 2.0. Table IB, Note 52.

(B) Method 300.0, Determination of Inorganic Anions by Ion Chromatography. Revision 2.1. Table IB, Note 52.

(C) Method 335.4, Determination of Total Cyanide by Semi-Automated Colorimetry. Revision 1.0. Table IB, Notes 52 and 57.

(D) Method 350.1, Determination of Ammonium Nitrogen by Semi-Automated Colorimetry. Revision 2.0. Table IB, Notes 30 and 52.

(E) Method 351.2, Determination of Total Kjeldahl Nitrogen by Semi-Automated Colorimetry. Revision 2.0. Table IB, Note 52.

(F) Method 353.2, Determination of Nitrate-Nitrite Automated Colorimetry. Revision 2.0. Table IB, Note 52.

(G) Method 365.1, Determination of Phosphorus by Automated Colorimetry. Revision 2.0. Table IB, Note 52.

(H) Method 375.2, Determination of Sulfate by Automated Colorimetry. Revision 2.0. Table IB, Note 52.

(I) Method 410.4, Determination of Chemical Oxygen Demand by Semi-Automated Colorimetry. Revision 2.0. Table IB, Note 52.

(ii) Methods for the Determination of Metals in Environmental Samples, Supplement I. May 1994. EPA/600/R–94/111, Pub. No. PB 95125472. Table IB, Note 52.

(A) Method 200.7, Determination of Metals and Trace Elements in Water and Wastes by Inductively Coupled Plasma-Atomic Emission Spectrometry. Revision 4.4. Table IB, Note 52.

(B) Method 200.8, Determination of Trace Elements in Water and Wastes by Inductively Coupled Plasma Mass Spectrometry. Revision 5.3. Table IB, Note 52.

(C) Method 200.9, Determination of Trace Elements by Stabilized Temperature Graphite Furnace Atomic Absorption Spectrometry. Revision 2.2. Table IB, Note 52.

(D) Method 218.6, Determination of Dissolved Hexavalent Chromium in Drinking Water, Groundwater, and Industrial Wastewater Effluents by Ion Chromatography. Revision 3.3. Table IB, Note 52.

(E) Method 245.1, Determination of Mercury in Water by Cold Vapor Atomic Absorption Spectrometry. Revision 3.0. Table IB, Note 52.

(4) National Exposure Risk Laboratory-Cincinnati, U.S. Environmental Protection Agency, Cincinnati OH (US EPA). Available at *http://water.epa.gov/scitech/methods/cwa/index.cfm*.

(i) EPA Method 200.5, Determination of Trace Elements in Drinking Water by Axially Viewed Inductively Coupled Plasma-Atomic Emission Spectrometry. Revision 4.2, October 2003. EPA/600/R–06/115. Table IB, Note 68.

(ii) EPA Method 525.2, Determination of Organic Compounds in Drinking Water by Liquid-Solid Extraction and Capillary Column Gas Chromatography/Mass Spectrometry. Revision 2.0, 1995. Table ID, Note 10.

(5) Office of Research and Development, Cincinnati OH. U.S. Environmental Protection Agency, Cincinnati OH (US EPA). Available at *http://water.epa.gov/scitech/methods/cwa/index.cfm* or from ORD Publications, CERI, U.S. Environmental Protection Agency, Cincinnati OH 45268.

(i) Methods for Benzidine, Chlorinated Organic Compounds, Pentachlorophenol, and Pesticides in Water and Wastewater. 1978. Table IC, Note 3; Table ID, Note 3.

(ii) Methods for Chemical Analysis of Water and Wastes. March 1979. EPA–600/4–79–020. Table IB, Note 1.

(iii) Methods for Chemical Analysis of Water and Wastes. Revised March 1983. EPA–600/4–79–020. Table IB, Note 1.

(A) Method 120.1, Conductance, Specific Conductance, µmhos at 25 °C. Revision 1982. Table IB, Note 1.

(B) Method 130.1, Hardness, Total (mg/L as $CaCO_3$), Colorimetric, Automated EDTA. Issued 1971. Table IB, Note 1.

(C) Method 150.2, pH, Continuous Monitoring (Electrometric). December 1982. Table IB, Note 1.

(D) Method 160.4, Residue, Volatile, Gravimetric, Ignition at 550 °C. Issued 1971. Table IB, Note 1.

(E) Method 206.5, Arsenic, Sample Digestion Prior to Total Arsenic Analysis by Silver Diethyldithiocarbamate or Hydride Procedures. Issued 1978. Table IB, Note 1.

(F) Method 231.2, Gold, Atomic Absorption, Furnace Technique. Issued 1978. Table IB, Note 1.

(G) Method 245.2, Mercury, Automated Cold Vapor Technique. Issued 1974. Table IB, Note 1.

(H) Method 252.2, Osmium, Atomic Absorption, Furnace Technique. Issued 1978. Table IB, Note 1.

(I) Method 253.2, Palladium, Atomic Absorption, Furnace Technique. Issued 1978. Table IB, Note 1.

(J) Method 255.2, Platinum, Atomic Absorption, Furnace Technique. Issued 1978. Table IB, Note 1.

(K) Method 265.2, Rhodium, Atomic Absorption, Furnace Technique. Issued 1978. Table IB, Note 1.

(L) Method 279.2, Thallium, Atomic Absorption, Furnace Technique. Issued 1978. Table IB, Note 1.

(M) Method 283.2, Titanium, Atomic Absorption, Furnace Technique. Issued 1978. Table IB, Note 1.

(N) Method 289.2, Zinc, Atomic Absorption, Furnace Technique. Issued 1978. Table IB, Note 1.

(O) Method 310.2, Alkalinity, Colorimetric, Automated, Methyl Orange. Revision 1974. Table IB, Note 1.

(P) Method 351.1, Nitrogen, Kjeldahl, Total, Colorimetric, Automated Phenate. Revision 1978. Table IB, Note 1.

(Q) Method 352.1, Nitrogen, Nitrate, Colorimetric, Brucine. Issued 1971. Table IB, Note 1.

(R) Method 365.3, Phosphorus, All Forms, Colorimetric, Ascorbic Acid, Two Reagent. Issued 1978. Table IB, Note 1.

(S) Method 365.4, Phosphorus, Total, Colorimetric, Automated, Block Digestor AA II. Issued 1974. Table IB, Note 1.

(T) Method 410.3, Chemical Oxygen Demand, Titrimetric, High Level for Saline Waters. Revision 1978. Table IB, Note 1.

(U) Method 420.1, Phenolics, Total Recoverable, Spectrophotometric, Manual 4–AAP With Distillation. Revision 1978. Table IB, Note 1.

(iv) Prescribed Procedures for Measurement of Radioactivity in Drinking Water. 1980. EPA–600/4–80–032. Table IE.

(A) Method 900.0, Gross Alpha and Gross Beta Radioactivity. Table IE.

(B) Method 903.0, Alpha-Emitting iRadio Isotopes. Table IE.

(C) Method 903.1, Radium-226, Radon Emanation Technique. Table IE.

(D) Appendix B, Error and Statistical Calculations. Table IE.

(6) Office of Science and Technology, U.S. Environmental Protection Agency, Washington DC (US EPA). Available at *http://water.epa.gov/scitech/methods/cwa/index.cfm*.

(i) Method 1625C, Semivolatile Organic Compounds by Isotope Dilution GCMS. 1989. Table IF.

(ii) [Reserved]

(7) Office of Water, U.S. Environmental Protection Agency, Washington DC (US EPA). Available at *http://water.epa.gov/scitech/methods/cwa/index.cfm* or from National Technical Information Service, 5285 Port Royal Road, Springfield, Virginia 22161.

(i) Method 1631, Mercury in Water by Oxidation, Purge and Trap, and Cold Vapor Atomic Fluorescence Spectrometry. Revision E, August 2002. EPA–821–R–02–019, Pub. No. PB2002–108220. Table IB, Note 43.

(ii) Kelada-01, Kelada Automated Test Methods for Total Cyanide, Acid Dissociable Cyanide, and Thiocyanate. Revision 1.2, August 2001. EPA 821–B–01–009, Pub. No. PB 2001–108275. Table IB, Note 55.

(iii) In the compendium *Analytical Methods for the Determination of Pollutants in Pharmaceutical Manufacturing Industry Wastewaters*. July 1998. EPA 821–B–98–016, Pub. No. PB95201679. Table IF, Note 1.

(A) EPA Method 1666, Volatile Organic Compounds Specific to the Pharmaceutical Industry by Isotope Dilution GC/MS. Table IF, Note 1.

(B) EPA Method 1667, Formaldehyde, Isobutyraldehyde, and Furfural by Derivatization Followed by High Performance Liquid Chromatography. Table IF.

(C) Method 1671, Volatile Organic Compounds Specific to the Pharmaceutical Manufacturing Industry by GC/FID. Table IF.

(iv) Methods For The Determination of Nonconventional Pesticides In Municipal and Industrial Wastewater, Volume I. Revision I, August 1993. EPA 821–R–93–010A, Pub. No. PB 94121654. Tables ID, IG.

(A) Method 608.1, Organochlorine Pesticides. Table ID, Note 10; Table IG, Note 3.

(B) Method 608.2, Certain Organochlorine Pesticides. Table ID, Note 10; Table IG, Note 3.

(C) Method 614, Organophosphorus Pesticides. Table ID, Note 10; Table IG, Note 3.

(D) Method 614.1, Organophosphorus Pesticides. Table ID, Note 10; Table IG, Note 3.

(E) Method 615, Chlorinated Herbicides. Table ID, Note 10; Table IG, Note 3.

(F) Method 617, Organohalide Pesticides and PCBs. Table ID, Note 10; Table IG, Note 3.

(G) Method 619, Triazine Pesticides. Table ID, Note 10; Table IG, Note 3.

(H) Method 622, Organophosphorus Pesticides. Table ID, Note 10; Table IG, Note 3.

(I) Method 622.1, Thiophosphate Pesticides. Table ID, Note 10; Table IG, Note 3.

(J) Method 627, Dinitroaniline Pesticides. Table ID, Note 10; Table IG, Notes 1 and 3.

(K) Method 629, Cyanazine. Table IG, Note 3.

(L) Method 630, Dithiocarbamate Pesticides. Table IG, Note 3.

(M) Method 630.1, Dithiocarbamate Pesticides. Table IG, Note 3.

(N) Method 631, Benomyl and Carbendazim. Table IG, Note 3.

(O) Method 632, Carbamate and Urea Pesticides. Table ID, Note 10; Table IG, Note 3.

(P) Method 632.1, Carbamate and Amide Pesticides. Table IG, Note 3.

(Q) Method 633, Organonitrogen Pesticides. Table IG, Note 3.

(R) Method 633.1, Neutral Nitrogen-Containing Pesticides. Table IG, Note 3.

(S) Method 637, MBTS and TCMTB. Table IG, Note 3.

(T) Method 644, Picloram. Table IG, Note 3.

(U) Method 645, Certain Amine Pesticides and Lethane. Table IG, Note 3.

(V) Method 1656, Organohalide Pesticides. Table ID, Note 10; Table IG, Notes 1 and 3.

(W) Method 1657, Organophosphorus Pesticides. Table ID, Note 10; Table IG, Note 3.

(X) Method 1658, Phenoxy-Acid Herbicides. Table IG, Note 3.

(Y) Method 1659, Dazomet. Table IG, Note 3.

(Z) Method 1660, Pyrethrins and Pyrethroids. Table IG, Note 3.

(AA) Method 1661, Bromoxynil. Table IG, Note 3.

(BB) Ind-01. Methods EV–024 and EV–025, Analytical Procedures for Determining Total Tin and Triorganotin in Wastewater. Table IG, Note 3.

(v) Methods For The Determination of Nonconventional Pesticides In Municipal and Industrial Wastewater, Volume II. August 1993. EPA 821–R–93–010B, Pub. No. PB 94166311. Table IG.

(A) Method 200.9, Determination of Trace Elements by Stabilized Temperature Graphite Furnace Atomic Absorption Spectrometry. Table IG, Note 3.

(B) Method 505, Analysis of Organohalide Pesticides and Commercial Polychlorinated Biphenyl (PCB) Products in Water by Microextraction and Gas Chromatography. Table ID, Note 10; Table IG, Note 3.

(C) Method 507, The Determination of Nitrogen- and Phosphorus-Containing Pesticides in Water by Gas Chromatography with a Nitrogen-Phosphorus Detector. Table ID, Note 10; Table IG, Note 3.

(D) Method 508, Determination of Chlorinated Pesticides in Water by Gas Chromatography with an Electron Capture Detector. Table ID, Note 10; Table IG, Note 3.

(E) Method 515.1, Determination of Chlorinated Acids in Water by Gas Chromatography with an Electron Capture Detector. Table IG, Notes 2 and 3.

(F) Method 515.2, Determination of Chlorinated Acids in Water Using Liquid-Solid Extraction and Gas Chromatography with an Electron Capture Detector. Table IG, Notes 2 and 3.

(G) Method 525.1, Determination of Organic Compounds in Drinking Water by Liquids-Solid Extraction and Capillary Column Gas Chromatography/Mass Spectrometry. Table ID, Note 10; Table IG, Note 3.

(H) Method 531.1, Measurement of N-Methylcarbamoyloximes and N-Methylcarbamates in Water by Direct Aqueous Injection HPLC with Post-Column Derivatization. Table ID, Note 10; Table IG, Note 3.

(I) Method 547, Determination of Glyphosate in Drinking Water by Direct-Aqueous-Injection HPLC, Post-Column Derivatization, and Fluorescence Detection. Table IG, Note 3.

(J) Method 548, Determination of Endothall in Drinking Water by Aqueous Derivatization, Liquid-Solid Extraction, and Gas Chromatography with Electron-Capture Detector. Table IG, Note 3.

(K) Method 548.1, Determination of Endothall in Drinking Water by Ion-Exchange Extraction, Acidic Methanol Methylation and Gas Chromatography/Mass Spectrometry. Table IG, Note 3.

(L) Method 553, Determination of Benzidines and Nitrogen-Containing Pesticides in Water by Liquid-Liquid Extraction or Liquid-Solid Extraction and Reverse Phase High Performance Liquid Chromatography/Particle Beam/Mass Spectrometry Table ID, Note 10; Table IG, Note 3.

(M) Method 555, Determination of Chlorinated Acids in Water by High Performance Liquid Chromatography With a Photodiode Array Ultraviolet Detector. Table IG, Note 3.

(vi) In the compendium *Methods for the Determination of Organic Compounds in Drinking Water*. Revised July 1991, December 1998. EPA–600/4–88–039, Pub. No. PB92–207703. Table IF.

(A) EPA Method 502.2, Volatile Organic Compounds in Water by Purge and Trap Capillary Column Gas Chromatography with Photoionization and Electrolytic Conductivity Detectors in Series. Table IF.

(B) [Reserved]

(vii) In the compendium *Methods for the Determination of Organic Compounds in Drinking Water-Supplement II*. August 1992. EPA–600/R–92–129, Pub. No. PB92–207703. Table IF.

(A) EPA Method 524.2, Measurement of Purgeable Organic Compounds in Water by Capillary Column Gas Chromatography/Mass Spectrometry. Table IF.

(B) [Reserved]

(viii) Methods for Measuring the Acute Toxicity of Effluents and Receiving Waters to Freshwater and Marine Organisms, Fifth Edition. October 2002. EPA 821–R–02–012, Pub. No. PB2002–108488. Table IA, Note 26.

(ix) Short-Term Methods for Measuring the Chronic Toxicity of Effluents and Receiving Waters to Freshwater Organisms, Fourth Edition. October 2002. EPA 821–R–02–013, Pub. No. PB2002–108489. Table IA, Note 27.

(x) Short-Term Methods for Measuring the Chronic Toxicity of Effluents and Receiving Waters to Marine and Estuarine Organisms, Third Edition. October 2002. EPA 821–R–02–014, Pub. No. PB2002–108490. Table IA, Note 28.

(8) Office of Water, U.S. Environmental Protection Agency, Washington DC (US EPA). Available at *http://water.epa.gov/scitech/methods/cwa/index.cfm*.

(i) Method 245.7, Mercury in Water by Cold Vapor Atomic Fluorescence Spectrometry. Revision 2.0, February 2005. EPA–821–R–05–001. Table IB, Note 17.

(ii) Method 1103.1: *Escherichia coli* (*E. coli*) in Water by Membrane Filtration Using membrane-Thermotolerant *Escherichia coli* Agar (mTEC). March 2010. EPA–621–R–10–002. Table IH, Note 19.

(iii) Method 1106.1: Enterococci in Water by Membrane Filtration Using membrane-Enterococcus-Esculin Iron Agar (mE–EIA). December 2009. EPA–621–R–09–015. Table IH, Note 23.

(iv) Method 1600: Enterococci in Water by Membrane Filtration Using membrane-Enterococcus Indoxyl-β-D-Glucoside Agar (mEI). September 2014. EPA–821–R–14–011. Table IA, Note 25; Table IH, Note 24.

(v) Method 1603: *Escherichia coli* (*E. coli*) in Water by Membrane Filtration Using Modified membrane-Thermotolerant *Escherichia coli* Agar (Modified mTEC). September 2014. EPA–821–R–14–010. Table IA, Note 22; Table IH, Note 20.

(vi) Method 1604: Total Coliforms and *Escherichia coli* (*E. coli*) in Water by Membrane Filtration Using a Simultaneous Detection Technique (MI Medium). September 2002. EPA–821–R–02–024. Table IH, Note 21.

(vii) Method 1622: *Cryptosporidium* in Water by Filtration/IMS/FA. December 2005. EPA–821–R–05–001. Table IH, Note 25.

(viii) Method 1623: *Cryptosporidium* and *Giardia* in Water by Filtration/IMS/FA. December 2005. EPA–821–R–05–002. Table IH, Note 26.

(ix) Method 1627, Kinetic Test Method for the Prediction of Mine Drainage Quality. December 2011. EPA–821–R–09–002. Table IB, Note 69.

(x) Method 1664, n-Hexane Extractable Material (HEM; Oil and Grease) and Silica Gel Treated n-Hexane Extractable Material (SGT-HEM; Nonpolar Material) by Extraction and Gravimetry. Revision A, February 1999. EPA–821–R–98–002. Table IB, Notes 38 and 42.

(xi) Method 1664, n-Hexane Extractable Material (HEM; Oil and Grease) and Silica Gel Treated n-Hexane Extractable Material (SGT-HEM; Nonpolar Material) by Extraction and Gravimetry. Revision B, February 2010. EPA–821–R–10–001. Table IB, Notes 38 and 42.

(xii) Method 1669, Sampling Ambient Water for Trace Metals at EPA Water Quality Criteria Levels. July 1996. Table IB, Note 43.

(xiii) Method 1680: Fecal Coliforms in Sewage Sludge (Biosolids) by Multiple-Tube Fermentation using Lauryl Tryptose Broth (LTB) and EC Medium. September 2014. EPA–821–R–14–009. Table IA, Note 15.

(xiv) Method 1681: Fecal Coliforms in Sewage Sludge (Biosolids) by Multiple-Tube Fermentation using A–1 Medium. July 2006. EPA 821–R–06–013. Table IA, Note 20.

(xv) Method 1682: *Salmonella* in Sewage Sludge (Biosolids) by Modified Semisolid Rappaport-Vassiliadis (MSRV) Medium. September 2014. EPA 821–R–14–012. Table IA, Note 23.

(9) American National Standards Institute, 1430 Broadway, New York NY 10018.

(i) ANSI. American National Standard on Photographic Processing Effluents. April 2, 1975. Table IB, Note 9.

(ii) [Reserved]

(10) American Public Health Association, 1015 15th Street NW., Washington, DC 20005. Standard Methods Online is available through the Standard Methods Web site (*http://www.standardmethods.org*).

(i) Standard Methods for the Examination of Water and Wastewater. 14th Edition, 1975. Table IB, Notes 17 and 27.

(ii) Standard Methods for the Examination of Water and Wastewater. 15th Edition, 1980, Table IB, Note 30; Table ID.

(iii) Selected Analytical Methods Approved and Cited by the United States Environmental Protection Agency, Supplement to the 15th Edition of Standard Methods for the Examination of Water and Wastewater. 1981. Table IC, Note 6; Table ID, Note 6.

(iv) Standard Methods for the Examination of Water and Wastewater. 18th

Edition, 1992. Tables IA, IB, IC, ID, IE, and IH.

(v) Standard Methods for the Examination of Water and Wastewater. 19th Edition, 1995. Tables IA, IB, IC, ID, IE, and IH.

(vi) Standard Methods for the Examination of Water and Wastewater. 20th Edition, 1998. Tables IA, IB, IC, ID, IE, and IH.

(vii) Standard Methods for the Examination of Water and Wastewater. 21st Edition, 2005. Table IB, Notes 17 and 27.

(viii) 2120, Color. 2011. Table IB.

(ix) 2130, Turbidity. 2011. Table IB.

(x) 2310, Acidity. 2011. Table IB.

(xi) 2320, Alkalinity. 2011. Table IB.

(xii) 2340, Hardness. 2011. Table IB.

(xiii) 2510, Conductivity. 2011. Table IB.

(xiv) 2540, Solids. 2011. Table IB.

(xv) 2550, Temperature. 2010. Table IB.

(xvi) 3111, Metals by Flame Atomic Absorption Spectrometry. 2011. Table IB.

(xvii) 3112, Metals by Cold-Vapor Atomic Absorption Spectrometry. 2011. Table IB.

(xviii) 3113, Metals by Electrothermal Atomic Absorption Spectrometry. 2010. Table IB.

(xix) 3114, Arsenic and Selenium by Hydride Generation/Atomic Absorption Spectrometry. 2011. Table IB.

(xx) 3120, Metals by Plasma Emission Spectroscopy. 2011. Table IB.

(xxi) 3125, Metals by Inductively Coupled Plasma-Mass Spectrometry. 2011. Table IB.

(xxii) 3500-Al, Aluminum. 2011. Table IB.

(xxiii) 3500-As, Arsenic. 2011. Table IB.

(xxiv) 3500-Ca, Calcium. 2011. Table IB.

(xxv) 3500-Cr, Chromium. 2011. Table IB.

(xxvi) 3500-Cu, Copper. 2011. Table IB.

(xxvii) 3500-Fe, Iron. 2011. Table IB.

(xxviii) 3500-Pb, Lead. 2011. Table IB.

(xxix) 3500-Mn, Manganese. 2011. Table IB.

(xxx) 3500-K, Potassium. 2011. Table IB.

(xxxi) 3500-Na, Sodium. 2011. Table IB.

(xxxii) 3500-V, Vanadium. 2011. Table IB.

(xxxiii) 3500-Zn, Zinc. 2011. Table IB.

(xxxiv) 4110, Determination of Anions by Ion Chromatography. 2011. Table IB.

(xxxv) 4140, Inorganic Anions by Capillary Ion Electrophoresis. 2011. Table IB.

(xxxvi) 4500-B, Boron. 2011. Table IB.

(xxxvii) 4500-Cl^-, Chloride. 2011. Table IB.

(xxxviii) 4500-Cl, Chlorine (Residual). 2011. Table IB.

(xxxix) 4500-CN^-, Cyanide. 2011. Table IB.

(xl) 4500-F^-, Fluoride. 2011. Table IB.

(xli) 4500-H^+, pH Value. 2011. Table IB.

(xlii) 4500-NH_3, Nitrogen (Ammonia). 2011. Table IB.

(xliii) 4500-NO_2^-, Nitrogen (Nitrite). 2011. Table IB.

(xliv) 4500–NO_3^-, Nitrogen (Nitrate). 2011. Table IB.

(xlv) 4500–N_{org}, Nitrogen (Organic). 2011. Table IB.

(xlvi) 4500–O, Oxygen (Dissolved). 2011. Table IB.

(xlvii) 4500–P, Phosphorus. 2011. Table IB.

(xlviii) 4500–SiO_2, Silica. 2011. Table IB.

(xlix) 4500–S^{2-}, Sulfide. 2011. Table IB.

(l) 4500–SO_3^{2-}, Sulfite. 2011. Table IB.

(li) 4500–SO_4^{2-}, Sulfate. 2011. Table IB.

(lii) 5210, Biochemical Oxygen Demand (BOD). 2011. Table IB.

(liii) 5220, Chemical Oxygen Demand (COD). 2011. Table IB.

(liv) 5310, Total Organic Carbon (TOC). 2011. Table IB.

(lv) 5520, Oil and Grease. 2011. Table IB.

(lvi) 5530, Phenols. 2010. Table IB.

(lvii) 5540, Surfactants. 2011. Table IB.

(lviii) 6200, Volatile Organic Compounds. 2011. Table IC.

(lix) 6410, Extractable Base/Neutrals and Acids. 2000. Tables IC, ID.

(lx) 6420, Phenols. 2000. Table IC.

(lxi) 6440, Polynuclear Aromatic Hydrocarbons. 2005. Table IC.

(lxii) 6630, Organochlorine Pesticides. 2007. Table ID.

(lxiii) 6640, Acidic Herbicide Compounds. 2006. Table ID.

(lxiv) 7110, Gross Alpha and Gross Beta Radioactivity (Total, Suspended, and Dissolved). 2000. Table IE.

(lxv) 7500, Radium. 2001. Table IE.

(lxvi) 9213, Recreational Waters. 2007. Table IH.

(lxvii) 9221, Multiple-Tube Fermentation Technique for Members of the Coliform Group. 2006. Table IA, Notes 12 and 14; Table IH, Notes 11 and 13.

(lxviii) 9222, Membrane Filter Technique for Members of the Coliform Group. 2006. Table IA; Table IH, Note 18.

(lxix) 9223, Enzyme Substrate Coliform Test. 2004. Table IA; Table IH.

(lxx) 9230, Fecal *Enterococcus/Streptococcus* Groups. 2007. Table IA; Table IH.

(11) The Analyst, The Royal Society of Chemistry, RSC Publishing, Royal Society of Chemistry, Thomas Graham House, Science Park, Milton Road, Cambridge CB4 0WF, United Kingdom. (Also available from most public libraries.)

(i) Spectrophotometric Determination of Ammonia: A Study of a Modified Berthelot Reaction Using Salicylate and Dichloroisocyanurate. Krom, M.D. 105:305–316, April 1980. Table IB, Note 60.

(ii) [Reserved]

(12) Analytical Chemistry, ACS Publications, 1155 Sixteenth St. NW., Washington DC 20036. (Also available from most public libraries.)

(i) Spectrophotometric and Kinetics Investigation of the Berthelot Reaction for the Determination of Ammonia. Patton, C.J. and S.R. Crouch. 49(3):464–469, March 1977. Table IB, Note 60.

(ii) [Reserved]

(13) AOAC International, 481 North Frederick Avenue, Suite 500, Gaithersburg, MD 20877–2417.

(i) Official Methods of Analysis of AOAC International. 16th Edition, 4th Revision, 1998.

(A) 920.203, Manganese in Water, Persulfate Method. Table IB, Note 3.

(B) 925.54, Sulfate in Water, Gravimetric Method. Table IB, Note 3.

(C) 973.40, Specific Conductance of Water. Table IB, Note 3.

(D) 973.41, pH of Water. Table IB, Note 3.

(E) 973.43, Alkalinity of Water, Titrimetric Method. Table IB, Note 3.

(F) 973.44, Biochemical Oxygen Demand (BOD) of Water, Incubation Method. Table IB, Note 3.

(G) 973.45, Oxygen (Dissolved) in Water, Titrimetric Methods. Table IB, Note 3.

(H) 973.46, Chemical Oxygen Demand (COD) of Water, Titrimetric Methods. Table IB, Note 3.

(I) 973.47, Organic Carbon in Water, Infrared Analyzer Method. Table IB, Note 3.

(J) 973.48, Nitrogen (Total) in Water, Kjeldahl Method. Table IB, Note 3.

(K) 973.49, Nitrogen (Ammonia) in Water, Colorimetric Method. Table IB, Note 3.

(L) 973.50, Nitrogen (Nitrate) in Water, Brucine Colorimetric Method. Table IB, Note 3.

(M) 973.51, Chloride in Water, Mercuric Nitrate Method. Table IB, Note 3.

(N) 973.52, Hardness of Water. Table IB, Note 3.

(O) 973.53, Potassium in Water, Atomic Absorption Spectrophotometric Method. Table IB, Note 3.

(P) 973.54, Sodium in Water, Atomic Absorption Spectrophotometric Method. Table IB, Note 3.

(Q) 973.55, Phosphorus in Water, Photometric Method. Table IB, Note 3.

(R) 973.56, Phosphorus in Water, Automated Method. Table IB, Note 3.

(S) 974.27, Cadmium, Chromium, Copper, Iron, Lead, Magnesium, Manganese, Silver, Zinc in Water, Atomic Absorption Spectrophotometric Method. Table IB, Note 3.

(T) 977.22, Mercury in Water, Flameless Atomic Absorption Spectrophotometric Method. Table IB, Note 3.

(U) 991.15. Total Coliforms and *Escherichia coli* in Water Defined Substrate Technology (Colilert) Method. Table IA, Note 10; Table IH, Note 10.

(V) 993.14, Trace Elements in Waters and Wastewaters, Inductively Coupled Plasma-Mass Spectrometric Method. Table IB, Note 3.

(W) 993.23, Dissolved Hexavalent Chromium in Drinking Water, Ground Water, and Industrial Wastewater Effluents, Ion Chromatographic Method. Table IB, Note 3.

(X) 993.30, Inorganic Anions in Water, Ion Chromatographic Method. Table IB, Note 3.

(ii) [Reserved]

(14) Applied and Environmental Microbiology, American Society for

Microbiology, 1752 N Street NW., Washington DC 20036. (Also available from most public libraries.)

(i) New Medium for the Simultaneous Detection of Total Coliforms and *Escherichia coli* in Water. Brenner, K.P., C.C. Rankin, Y.R. Roybal, G.N. Stelma, Jr., P.V. Scarpino, and A.P. Dufour. 59:3534–3544, November 1993. Table IH, Note 21.

(ii) [Reserved]

(15) ASTM International, 100 Barr Harbor Drive, P.O. Box C700, West Conshohocken, PA 19428–2959, or online at *http://www.astm.org*.

(i) Annual Book of ASTM Standards, Water, and Environmental Technology, Section 11, Volumes 11.01 and 11.02. 1994. Tables IA, IB, IC, ID, IE, and IH.

(ii) Annual Book of ASTM Standards, Water, and Environmental Technology, Section 11, Volumes 11.01 and 11.02. 1996. Tables IA, IB, IC, ID, IE, and IH.

(iii) Annual Book of ASTM Standards, Water, and Environmental Technology, Section 11, Volumes 11.01 and 11.02. 1999. Tables IA, IB, IC, ID, IE, and IH.

(iv) Annual Book of ASTM Standards, Water, and Environmental Technology, Section 11, Volumes 11.01 and 11.02. 2000. Tables IA, IB, IC, ID, IE, and IH.

(v) ASTM D511–09, Standard Test Methods for Calcium and Magnesium in Water. May 2009. Table IB.

(vi) ASTM D512–04, Standard Test Methods for Chloride Ion in Water. July 2004. Table IB.

(vii) ASTM D515–88, Test Methods for Phosphorus in Water, March 1989. Table IB.

(viii) ASTM D516–11, Standard Test Method for Sulfate Ion in Water, September 2011. Table IB.

(ix) ASTM D858–12, Standard Test Methods for Manganese in Water. September 2012. Table IB.

(x) ASTM D859–10, Standard Test Method for Silica in Water. July 2010. Table IB.

(xi) ASTM D888–09, Standard Test Methods for Dissolved Oxygen in Water. December 2009. Table IB.

(xii) ASTM D1067–11, Standard Test Methods for Acidity or Alkalinity of Water. April 2011. Table IB.

(xiii) ASTM D1068–10, Standard Test Methods for Iron in Water. October 2010. Table IB.

(xiv) ASTM D1125–95 (Reapproved 1999), Standard Test Methods for Electrical Conductivity and Resistivity of Water. December 1995. Table IB.

(xv) ASTM D1126–12, Standard Test Method for Hardness in Water. March 2012. Table IB.

(xvi) ASTM D1179–10, Standard Test Methods for Fluoride Ion in Water. July 2010. Table IB.

(xvii) ASTM D1246–10, Standard Test Method for Bromide Ion in Water. July 2010. Table IB.

(xviii) ASTM D1252–06, Standard Test Methods for Chemical Oxygen Demand (Dichromate Oxygen Demand) of Water. February 2006. Table IB.

(xix) ASTM D1253–08, Standard Test Method for Residual Chlorine in Water. October 2008. Table IB.

(xx) ASTM D1293–99, Standard Test Methods for pH of Water. March 2000. Table IB.

(xxi) ASTM D1426–08, Standard Test Methods for Ammonia Nitrogen in Water. September 2008. Table IB.

(xxii) ASTM D1687–12 (Approved September 1, 2012), Standard Test Methods for Chromium in Water. August 2007. Table IB.

(xxiii) ASTM D1688–12, Standard Test Methods for Copper in Water. September 2012. Table IB.

(xxiv) ASTM D1691–12, Standard Test Methods for Zinc in Water. September 2012. Table IB.

(xxv) ASTM D1783–01 (Reapproved 2007), Standard Test Methods for Phenolic Compounds in Water. January 2008). Table IB.

(xxvi) ASTM D1886–08, Standard Test Methods for Nickel in Water. October 2008. Table IB.

(xxvii) ASTM D1889–00, Standard Test Method for Turbidity of Water. October 2000. Table IB.

(xxviii) ASTM D1890–96, Standard Test Method for Beta Particle Radioactivity of Water. April 1996. Table IE.

(xxix) ASTM D1943–96, Standard Test Method for Alpha Particle Radioactivity of Water. April 1996. Table IE.

(xxx) ASTM D1976–12, Standard Test Method for Elements in Water by Inductively-Coupled Argon Plasma Atomic Emission Spectroscopy. March 2012. Table IB.

(xxxi) ASTM D2036–09, Standard Test Methods for Cyanides in Water. October 2009. Table IB.

(xxxii) ASTM D2330–02, Standard Test Method for Methylene Blue Active Substances. August 2002. Table IB.

(xxxiii) ASTM D2460–97, Standard Test Method for Alpha-Particle-Emitting Isotopes of Radium in Water. October 1997. Table IE.

(xxxiv) ASTM D2972–08, Standard Tests Method for Arsenic in Water. October 2008. Table IB.

(xxxv) ASTM D3223–12, Standard Test Method for Total Mercury in Water. September 2012. Table IB.

(xxxvi) ASTM D3371–95, Standard Test Method for Nitriles in Aqueous Solution by Gas-Liquid Chromatography, February 1996. Table IF.

(xxxvii) ASTM D3373–12, Standard Test Method for Vanadium in Water. September 2012. Table IB.

(xxxviii) ASTM D3454–97, Standard Test Method for Radium-226 in Water. February 1998. Table IE.

(xxxix) ASTM D3557–12, Standard Test Method for Cadmium in Water. September 2012. Table IB.

(xl) ASTM D3558–08, Standard Test Method for Cobalt in Water. November 2008. Table IB.

(xli) ASTM D3559–08, Standard Test Methods for Lead in Water. October 2008. Table IB.

(xlii) ASTM D3590–11, Standard Test Methods for Total Kjeldahl Nitrogen in Water. April 2011. Table IB.

(xliii) ASTM D3645–08, Standard Test Methods for Beryllium in Water. October 2008. Table IB.

(xliv) ASTM D3695–95, Standard Test Method for Volatile Alcohols in Water by Direct Aqueous-Injection Gas Chromatography. April 1995. Table IF.

(xlv) ASTM D3859–08, Standard Test Methods for Selenium in Water. October 2008. Table IB.

(xlvi) ASTM D3867–04, Standard Test Method for Nitrite-Nitrate in Water. July 2004. Table IB.

(xlvii) ASTM D4190–08, Standard Test Method for Elements in Water by Direct-Current Plasma Atomic Emission Spectroscopy. October 2008. Table IB.

(xlviii) ASTM D4282–02, Standard Test Method for Determination of Free Cyanide in Water and Wastewater by Microdiffusion. August 2002. Table IB.

(xlix) ASTM D4327–03, Standard Test Method for Anions in Water by Chemically Suppressed Ion Chromatography. January 2003. Table IB.

(l) ASTM D4382–12, Standard Test Method for Barium in Water, Atomic Absorption Spectrophotometry, Graphite Furnace. September 2012. Table IB.

(li) ASTM D4657–92 (Reapproved 1998), Standard Test Method for Polynuclear Aromatic Hydrocarbons in Water. January 1993. Table IC.

(lii) ASTM D4658–09, Standard Test Method for Sulfide Ion in Water. May 2009. Table IB.

(liii) ASTM D4763–88 (Reapproved 2001), Standard Practice for Identification of Chemicals in Water by Fluorescence Spectroscopy. September 1988. Table IF.

(liv) ASTM D4839–03, Standard Test Method for Total Carbon and Organic Carbon in Water by Ultraviolet, or Persulfate Oxidation, or Both, and Infrared Detection. January 2003. Table IB.

(lv) ASTM D5257–11, Standard Test Method for Dissolved Hexavalent Chromium in Water by Ion Chromatography. April 2011. Table IB.

(lvi) ASTM D5259–92, Standard Test Method for Isolation and Enumeration of Enterococci from Water by the Membrane Filter Procedure. October 1992. Table IH, Note 9.

(lvii) ASTM D5392–93, Standard Test Method for Isolation and Enumeration of *Escherichia coli* in Water by the Two-Step Membrane Filter Procedure. September 1993. Table IH, Note 9.

(lviii) ASTM D5673–10, Standard Test Method for Elements in Water by Inductively Coupled Plasma—Mass Spectrometry. September 2010. Table IB.

(lix) ASTM D5(19)907–13, Standard Test Method for Filterable Matter (Total Dissolved Solids) and Nonfilterable Matter (Total Suspended Solids) in Water. July 2013. Table IB.

(lx) ASTM D6503–99, Standard Test Method for Enterococci in Water Using Enterolert. April 2000. Table IA Note 9, Table IH, Note 9.

(lxi) ASTM. D6508–10, Standard Test Method for Determination of Dissolved Inorganic Anions in Aqueous Matrices Using Capillary Ion Electrophoresis and Chromate Electrolyte. October 2010. Table IB, Note 54.

(lxii) ASTM. D6888–09, Standard Test Method for Available Cyanide with Ligand Displacement and Flow Injection Analysis (FIA) Utilizing Gas Diffusion Separation and Amperometric Detection. October 2009. Table IB, Note 59.

(lxiii) ASTM. D6919–09, Standard Test Method for Determination of Dissolved Alkali and Alkaline Earth Cations and Ammonium in Water and Wastewater by Ion Chromatography. May 2009. Table IB.

(lxiv) ASTM. D7065–11, Standard Test Method for Determination of Nonylphenol, Bisphenol A, *p-tert*-Octylphenol, Nonylphenol Monoethoxylate and Nonylphenol Diethoxylate in Environmental Waters by Gas Chromatography Mass Spectrometry. July 2011. Table IB.

(lxv) ASTM. D7237–10, Standard Test Method for Free Cyanide with Flow Injection Analysis (FIA) Utilizing Gas Diffusion Separation and Amperometric Detection. June 2010. Table IB.

(lxvi) ASTM. D7284–13, Standard Test Method for Total Cyanide in Water by Micro Distillation followed by Flow Injection Analysis with Gas Diffusion Separation and Amperometric Detection. July 2013. Table IB.

(lxvii) ASTM. D7365–09a, Standard Practice for Sampling, Preservation, and Mitigating Interferences in Water Samples for Analysis of Cyanide. October 2009. Table II, Notes 5 and 6.

(lxviii) ASTM. D7511–12, Standard Test Method for Total Cyanide by Segmented Flow Injection Analysis, In-Line Ultraviolet Digestion and Amperometric Detection. January 2012. Table IB.

(lxix) ASTM. D7573–09, Standard Test Method for Total Carbon and Organic Carbon in Water by High Temperature Catalytic Combustion and Infrared Detection. November 2009. Table IB.

(16) Bran & Luebbe Analyzing Technologies, Inc., Elmsford NY 10523.

(i) Industrial Method Number 378–75WA, Hydrogen Ion (pH) Automated Electrode Method, Bran & Luebbe (Technicon) Auto Analyzer II. October 1976. Table IB, Note 21.

(ii) [Reserved]

(17) CEM Corporation, P.O. Box 200, Matthews NC 28106–0200.

(i) Closed Vessel Microwave Digestion of Wastewater Samples for Determination of Metals. April 16, 1992. Table IB, Note 36.

(ii) [Reserved]

(18) Craig R. Chinchilla, 900 Jorie Blvd., Suite 35, Oak Brook IL 60523. Telephone: 630–645–0600.

(i) Nitrate by Discrete Analysis Easy (1-Reagent) Nitrate Method, (Colorimetric, Automated, 1 Reagent). Revision 1, November 12, 2011. Table IB, Note 62.

(ii) [Reserved]

(19) Hach Company, P.O. Box 389, Loveland CO 80537.

(i) Method 8000, Chemical Oxygen Demand. Hach Handbook of Water Analysis. 1979. Table IB, Note 14.

(ii) Method 8008, 1,10-Phenanthroline Method using FerroVer Iron Reagent for Water. 1980. Table IB, Note 22.

(iii) Method 8009, Zincon Method for Zinc. Hach Handbook for Water Analysis. 1979. Table IB, Note 33.

(iv) Method 8034, Periodate Oxidation Method for Manganese. Hach Handbook for Water Analysis. 1979. Table IB, Note 23.

(v) Method 8506, Bicinchoninate Method for Copper. Hach Handbook of Water Analysis. 1979. Table IB, Note 19.

(vi) Method 8507, Nitrogen, Nitrite—Low Range, Diazotization Method for Water and Wastewater. 1979. Table IB, Note 25.

(vii) Method 10206, Hach Company TNTplus 835/836 Nitrate Method 10206, Spectrophotometric Measurement of Nitrate in Water and Wastewater. Revision 2.1, January 10, 2013. Table IB, Note 75.

(viii) Method 10242, Hach Company TNTplus 880 Total Kjeldahl Nitrogen Method 10242, Simplified Spectrophotometric Measurement of Total Kjeldahl Nitrogen in Water and Wastewater. Revision 1.1, January 10, 2013. Table IB, Note 76.

(ix) Hach Method 10360, Luminescence Measurement of Dissolved Oxygen in Water and Wastewater and for Use in the Determination of BOD_5 and $cBOD_5$. Revision 1.2, October 2011. Table IB, Note 63.

(x) m-ColiBlue24® Method, for total Coliforms and *E. coli*. Revision 2, 1999. Table IA, Note 18; Table IH, Note 17.

(20) IDEXX Laboratories Inc., One Idexx Drive, Westbrook ME 04092.

(i) Colilert. 2013. Table IA, Notes 17 and 18; Table IH, Notes 14, 15 and 16.

(ii) Colilert-18. 2013. Table IA, Notes 17 and 18; Table IH, Notes 14, 15 and 16.

(iii) Enterolert. 2013. Table IA, Note 24; Table IH, Note 12.

(iv) Quanti-Tray Insert and Most Probable Number (MPN) Table. 2013. Table IA, Note 18; Table IH, Notes 14 and 16.

(21) In-Situ Incorporated, 221 E. Lincoln Ave., Ft. Collins CO 80524. Telephone: 970–498–1500.

(i) In-Situ Inc. Method 1002–8–2009, Dissolved Oxygen Measurement by Optical Probe. 2009. Table IB, Note 64.

(ii) In-Situ Inc. Method 1003–8–2009, Biochemical Oxygen Demand (BOD) Measurement by Optical Probe. 2009. Table IB, Note 10.

(iii) In-Situ Inc. Method 1004–8–2009, Carbonaceous Biochemical Oxygen Demand (CBOD) Measurement by Optical Probe. 2009. Table IB, Note 35.

(22) Journal of Chromatography, Elsevier/North-Holland, Inc., Journal Information Centre, 52 Vanderbilt Avenue, New York NY 10164. (Also available from most public libraries.

(i) Direct Determination of Elemental Phosphorus by Gas-Liquid Chromatography. Addison, R.F. and R.G. Ackman. 47(3): 421–426, 1970. Table IB, Note 28.

(ii) [Reserved]

(23) Lachat Instruments, 6645 W. Mill Road, Milwaukee WI 53218, Telephone: 414–358–4200.

(i) QuikChem Method 10–204–00–1–X, Digestion and Distillation of Total Cyanide in Drinking and Wastewaters using MICRO DIST and Determination of Cyanide by Flow Injection Analysis. Revision 2.2, March 2005. Table IB, Note 56.

(ii) [Reserved]

(24) Leck Mitchell, Ph.D., P.E., 656 Independence Valley Dr., Grand Junction CO 81507. Telephone: 970–244–8661.

(i) Mitchell Method M5271, Determination of Turbidity by Nephelometry. Revision 1.0, July 31, 2008. Table IB, Note 66.

(ii) Mitchell Method M5331, Determination of Turbidity by Nephelometry. Revision 1.0, July 31, 2008. Table IB, Note 65.

(25) National Council of the Paper Industry for Air and Stream Improvements, Inc. (NCASI), 260 Madison Avenue, New York NY 10016.

(i) NCASI Method TNTP–W10900, Total Nitrogen and Total Phophorus in Pulp and Paper Biologically Treated Effluent by Alkaline Persulfate Digestion. June 2011. Table IB, Note 77.

(ii) NCASI Technical Bulletin No. 253, An Investigation of Improved Procedures for Measurement of Mill Effluent and Receiving Water Color. December 1971. Table IB, Note 18.

(iii) NCASI Technical Bulletin No. 803, An Update of Procedures for the Measurement of Color in Pulp Mill Wastewaters. May 2000. Table IB, Note 18.

(26) The Nitrate Elimination Co., Inc. (NECi), 334 Hecla St., Lake Linden NI 49945.

(i) NECi Method N07–0003, Method for Nitrate Reductase Nitrate-Nitrogen Analysis. Revision 9.0. March 2014. Table IB, Note 73.

(ii) [Reserved]

(27) Oceanography International Corporation, 512 West Loop, P.O. Box 2980, College Station TX 77840.

(i) OIC Chemical Oxygen Demand Method. 1978. Table IB, Note 13.

(ii) [Reserved]

(28) OI Analytical, Box 9010, College Station TX 77820–9010.

(i) Method OIA–1677–09, Available Cyanide by Ligand Exchange and Flow Injection Analysis (FIA). Copyright 2010. Table IB, Note 59.

(ii) Method PAI–DK01, Nitrogen, Total Kjeldahl, Block Digestion, Steam Distillation, Titrimetric Detection. Revised December 22, 1994. Table IB, Note 39.

(iii) Method PAI–DK02, Nitrogen, Total Kjeldahl, Block Digestion, Steam Distillation, Colorimetric Detection. Revised December 22, 1994. Table IB, Note 40.

(iv) Method PAI–DK03, Nitrogen, Total Kjeldahl, Block Digestion, Automated FIA Gas Diffusion. Revised December 22, 1994. Table IB, Note 41.

(29) ORION Research Corporation, 840 Memorial Drive, Cambridge, Massachusetts 02138.

(i) ORION Research Instruction Manual, Residual Chlorine Electrode Model 97–70. 1977. Table IB, Note 16.

(ii) [Reserved]

(30) Technicon Industrial Systems, Tarrytown NY 10591.

(i) Industrial Method Number 379–75WE Ammonia, Automated Electrode Method, Technicon Auto Analyzer II. February 19, 1976. Table IB, Note 7.

(ii) [Reserved]

(31) Thermo Jarrell Ash Corporation, 27 Forge Parkway, Franklin MA 02038.

(i) Method AES0029. Direct Current Plasma (DCP) Optical Emission Spectrometric Method for Trace Elemental Analysis of Water and Wastes. 1986, Revised 1991. Table IB, Note 34.

(ii) [Reserved]

(32) Thermo Scientific, 166 Cummings Center, Beverly MA 01915. Telephone: 1–800–225–1480. *www.thermoscientific.com.*

(i) Thermo Scientific Orion Method AQ4500, Determination of Turbidity by Nephelometry. Revision 5, March 12, 2009. Table IB, Note 67.

(ii) [Reserved]

(33) 3M Corporation, 3M Center Building 220–9E–10, St. Paul MN 55144–1000.

(i) Organochlorine Pesticides and PCBs in Wastewater Using Empore™ Disk'' Test Method 3M 0222. Revised October 28, 1994. Table IC, Note 8; Table ID, Note 8.

(ii) [Reserved]

(34) Timberline Instruments, LLC, 1880 South Flatiron Ct., Unit I, Boulder CO 80301.

(i) Timberline Amonia-001, Determination of Inorganic Ammonia by Continuous Flow Gas Diffusion and Conductivity Cell Analysis. June 24, 2011. Table IB, Note 74.

(ii) [Reserved]

(35) U.S. Geological Survey (USGS), U.S. Department of the Interior, Reston, Virginia. Available from USGS Books and Open-File Reports (OFR) Section, Federal Center, Box 25425, Denver, CO 80225.

(i) Colorimetric determination of nitrate plus nitrite in water by enzymatic reduction, automated discrete analyzer methods. U.S. Geological Survey Techniques and Methods, Book 5—Laboratory Analysis, Section B—Methods of the National Water Quality Laboratory, Chapter 8. 2011. Table IB, Note 72.

(ii) Methods for Determination of Inorganic Substances in Water and Fluvial Sediments, editors, Techniques of Water-Resources Investigations of the U.S. Geological Survey, Book 5, Chapter A1. 1979. Table IB, Note 8.

(iii) Methods for Determination of Inorganic Substances in Water and Fluvial Sediments, Techniques of Water-Resources Investigations of the U.S. Geological Survey, Book 5, Chapter A1. 1989. Table IB, Note 2.

(iv) Methods for the Determination of Organic Substances in Water and Fluvial Sediments. Techniques of Water-Resources Investigations of the U.S. Geological Survey, Book 5, Chapter A3. 1987. Table IB, Note 24; Table ID, Note 4.

(v) OFR 76–177, Selected Methods of the U.S. Geological Survey of Analysis of Wastewaters. 1976. Table IE, Note 2.

(vi) OFR 91–519, Methods of Analysis by the U.S. Geological Survey National Water Quality Laboratory—Determination of Organonitrogen Herbicides in Water by Solid-Phase Extraction and Capillary-Column Gas Chromatography/Mass Spectrometry With Selected-Ion Monitoring. 1992. Table ID, Note 14.

(vii) OFR 92–146, Methods of Analysis by the U.S. Geological Survey National Water Quality Laboratory—Determination of Total Phosphorus by a Kjeldahl Digestion Method and an Automated Colorimetric Finish That Includes Dialysis. 1992. Table IB, Note 48.

(viii) OFR 93–125, Methods of Analysis by the U.S. Geological Survey National Water Quality Laboratory—Determination of Inorganic and Organic Constituents in Water and Fluvial Sediments. 1993. Table IB, Note 51; Table IC, Note 9.

(ix) OFR 93–449, Methods of Analysis by the U.S. Geological Survey National Water Quality Laboratory—Determination of Chromium in Water by Graphite Furnace Atomic Absorption Spectrophotometry. 1993. Table IB, Note 46.

(x) OFR 94–37, Methods of Analysis by the U.S. Geological Survey National Water Quality Laboratory—Determination of Triazine and Other Nitrogen-containing Compounds by Gas Chromatography With Nitrogen Phosphorus Detectors. 1994. Table ID, Note 9.

(xi) OFR 95–181, Methods of Analysis by the U.S. Geological Survey National Water Quality Laboratory—Determination of Pesticides in Water by C–18

Solid-Phase Extraction and Capillary-Column Gas Chromatography/Mass Spectrometry With Selected-Ion Monitoring. 1995. Table ID, Note 11.

(xii) OFR 97–198, Methods of Analysis by the U.S. Geological Survey National Water Quality Laboratory—Determination of Molybdenum in Water by Graphite Furnace Atomic Absorption Spectrophotometry. 1997. Table IB, Note 47.

(xiii) OFR 98–165, Methods of Analysis by the U.S. Geological Survey National Water Quality Laboratory—Determination of Elements in Whole-Water Digests Using Inductively Coupled Plasma-Optical Emission Spectrometry and Inductively Coupled Plasma-Mass Spectrometry. 1998. Table IB, Note 50.

(xiv) OFR 98–639, Methods of Analysis by the U.S. Geological Survey National Water Quality Laboratory—Determination of Arsenic and Selenium in Water and Sediment by Graphite Furnace—Atomic Absorption Spectrometry. 1999. Table IB, Note 49.

(xv) OFR 00–170, Methods of Analysis by the U.S. Geological Survey National Water Quality Laboratory—Determination of Ammonium Plus Organic Nitrogen by a Kjeldahl Digestion Method and an Automated Photometric Finish that Includes Digest Cleanup by Gas Diffusion. 2000. Table IB, Note 45.

(xvi) Techniques and Methods Book 5–B1, Determination of Elements in Natural-Water, Biota, Sediment and Soil Samples Using Collision/Reaction Cell Inductively Coupled Plasma-Mass Spectrometry. Chapter 1, Section B, Methods of the National Water Quality Laboratory, Book 5, Laboratory Analysis. 2006. Table IB, Note 70.

(xvii) U.S. Geological Survey Techniques of Water-Resources Investigations, Book 5, Laboratory Analysis, Chapter A4, Methods for Collection and Analysis of Aquatic Biological and Microbiological Samples. 1989. Table IA, Note 4; Table IH, Note 4.

(xviii) Water-Resources Investigation Report 01–4098, Methods of Analysis by the U.S. Geological Survey National Water Quality Laboratory—Determination of Moderate-Use Pesticides and Selected Degradates in Water by C–18 Solid-Phase Extraction and Gas Chromatography/Mass Spectrometry. 2001. Table ID, Note 13.

(xix) Water-Resources Investigations Report 01–4132, Methods of Analysis by the U.S. Geological Survey National Water Quality Laboratory—Determination of Organic Plus Inorganic Mercury in Filtered and Unfiltered Natural Water With Cold Vapor-Atomic Fluorescence Spectrometry. 2001. Table IB, Note 71.

(xx) Water-Resources Investigation Report 01–4134, Methods of Analysis by the U.S. Geological Survey National Water Quality Laboratory—Determination of Pesticides in Water by Graphitized Carbon-Based Solid-Phase Extraction and High-Performance Liquid Chormatography/Mass Spectrometry. 2001. Table ID, Note 12.

(xxi) Water Temperature—Influential Factors, Field Measurement and Data Presentation, Techniques of Water-Resources Investigations of the U.S. Geological Survey, Book 1, Chapter D1. 1975. Table IB, Note 32.

(36) Waters Corporation, 34 Maple Street, Milford MA 01757, Telephone: 508–482–2131, Fax: 508–482–3625.

(i) Method D6508, Test Method for Determination of Dissolved Inorganic Anions in Aqueous Matrices Using Capillary Ion Electrophoresis and Chromate Electrolyte. Revision 2, December 2000. Table IB, Note 54.

(ii) [Reserved]

(c) Under certain circumstances, the Director may establish limitations on the discharge of a parameter for which there is no test procedure in this part or in 40 CFR parts 405 through 499. In these instances the test procedure shall be specified by the Director.

(d) Under certain circumstances, the Administrator may approve additional alternate test procedures for nationwide use, upon recommendation by the Alternate Test Procedure Program Coordinator, Washington, DC.

(e) Sample preservation procedures, container materials, and maximum allowable holding times for parameters are cited in Tables IA, IB, IC, ID, IE, IF, IG, and IH are prescribed in Table II. Information in the table takes precedence over information in specific methods or elsewhere. Any person may apply for a change from the prescribed

preservation techniques, container materials, and maximum holding times applicable to samples taken from a specific discharge. Applications for such limited use changes may be made by letters to the Regional Alternative Test Procedure (ATP) Program Coordinator or the permitting authority in the Region in which the discharge will occur. Sufficient data should be provided to assure such changes in sample preservation, containers or holding times do not adversely affect the integrity of the sample. The Regional ATP Coordinator or permitting authority will review the application and then notify the applicant and the appropriate State agency of approval or rejection of the use of the alternate test procedure. A decision to approve or deny any request on deviations from the prescribed Table II requirements will be made within 90 days of receipt of the application by the Regional Administrator. An analyst may not modify any sample preservation and/or holding time requirements of an approved method unless the requirements of this section are met.

TABLE II—REQUIRED CONTAINERS, PRESERVATION TECHNIQUES, AND HOLDING TIMES

Parameter number/name	Container [1]	Preservation [2 3]	Maximum holding time [4]
Table IA—Bacterial Tests			
1–5. Coliform, total, fecal, and *E. coli.*	PA, G	Cool, <10 °C, 0.008% $Na_2S_2O_3$ [5].	8 hours.[22 23]
6. Fecal streptococci	PA, G	Cool, <10 °C, 0.008% $Na_2S_2O_3$ [5].	8 hours.[22]
7. Enterococci	PA, G	Cool, <10 °C, 0.008% $Na_2S_2O_3$ [5].	8 hours.[22]
8. *Salmonella*	PA, G	Cool, <10 °C, 0.008% $Na_2S_2O_3$ [5].	8 hours.[22]
Table IA—Aquatic Toxicity Tests			
9–12. Toxicity, acute and chronic.	P, FP, G	Cool, ≤6 °C [16]	36 hours.
Table IB—Inorganic Tests			
1. Acidity	P, FP, G	Cool, ≤6 °C [18]	14 days.
2. Alkalinity	P, FP, G	Cool, ≤6 °C [18]	14 days.
4. Ammonia	P, FP, G	Cool, ≤6 °C,[18] H_2SO_4 to pH <2.	28 days.
9. Biochemical oxygen demand.	P, FP, G	Cool, ≤6 °C [18]	48 hours.
10. Boron	P, FP, or Quartz	HNO_3 to pH <2	6 months.
11. Bromide	P, FP, G	None required	28 days.
14. Biochemical oxygen demand, carbonaceous.	P, FP G	Cool, ≤6 °C [18]	48 hours.
15. Chemical oxygen demand	P, FP, G	Cool, ≤6 °C,[18] H_2SO_4 to pH <2.	28 days.
16. Chloride	P, FP, G	None required	28 days.
17. Chlorine, total residual	P, G	None required	Analyze within 15 minutes.
21. Color	P, FP, G	Cool, ≤6 °C [18]	48 hours.
23–24. Cyanide, total or available (or CATC) and free.	P, FP, G	Cool, ≤6 °C,[18] NaOH to pH >10,[5 6] reducing agent if oxidizer present.	14 days.
25. Fluoride	P	None required	28 days.
27. Hardness	P, FP, G	HNO_3 or H_2SO_4 to pH <2	6 months.
28. Hydrogen ion (pH)	P, FP, G	None required	Analyze within 15 minutes.
31, 43. Kjeldahl and organic N	P, FP, G	Cool, ≤6 °C,[18] H_2SO_4 to pH <2.	28 days.
Table IB—Metals [7]			
18. Chromium VI	P, FP, G	Cool, ≤6 °C,[18] pH = 9.3–9.7 [20].	28 days.
35. Mercury (CVAA)	P, FP, G	HNO_3 to pH <2	28 days.
35. Mercury (CVAFS)	FP, G; and FP-lined cap [17]	5 mL/L 12N HCl or 5 mL/L BrCl [17].	90 days.[17]

TABLE II—REQUIRED CONTAINERS, PRESERVATION TECHNIQUES, AND HOLDING TIMES—Continued

Parameter number/name	Container [1]	Preservation [2 3]	Maximum holding time [4]
3, 5–8, 12, 13, 19, 20, 22, 26, 29, 30, 32–34, 36, 37, 45, 47, 51, 52, 58–60, 62, 63, 70–72, 74, 75. Metals, except boron, chromium VI, and mercury.	P, FP, G	HNO_3 to pH <2, or at least 24 hours prior to analysis [19].	6 months.
38. Nitrate	P, FP, G	Cool, ≤6 °C [18]	48 hours.
39. Nitrate-nitrite	P, FP, G	Cool, ≤6 °C,[18] H_2SO_4 to pH <2.	28 days.
40. Nitrite	P, FP, G	Cool, ≤6 °C [18]	48 hours.
41. Oil and grease	G	Cool to ≤6 °C,[18] HCl or H_2SO_4 to pH <2.	28 days.
42. Organic Carbon	P, FP, G	Cool to ≤6 °C,[18] HCl, H_2SO_4, or H_3PO_4 to pH <2.	28 days.
44. Orthophosphate	P, FP, G	Cool, to ≤6 °C [18 24]	Filter within 15 minutes; Analyze within 48 hours.
46. Oxygen, Dissolved Probe	G, Bottle and top	None required	Analyze within 15 minutes.
47. Winkler	G, Bottle and top	Fix on site and store in dark	8 hours.
48. Phenols	G	Cool, ≤6 °C,[18] H_2SO_4 to pH <2.	28 days.
49. Phosphorous (elemental)	G	Cool, ≤6 °C [18]	48 hours.
50. Phosphorous, total	P, FP, G	Cool, ≤6 °C,[18] H_2SO_4 to pH <2.	28 days.
53. Residue, total	P, FP, G	Cool, ≤6 °C [18]	7 days.
54. Residue, Filterable	P, FP, G	Cool, ≤6 °C [18]	7 days.
55. Residue, Nonfilterable (TSS).	P, FP, G	Cool, ≤6 °C [18]	7 days.
56. Residue, Settleable	P, FP, G	Cool, ≤6 °C [18]	48 hours.
57. Residue, Volatile	P, FP, G	Cool, ≤6 °C [18]	7 days.
61. Silica	P or Quartz	Cool, ≤6 °C [18]	28 days.
64. Specific conductance	P, FP, G	Cool, ≤6 °C [18]	28 days.
65. Sulfate	P, FP, G	Cool, ≤6 °C [18]	28 days.
66. Sulfide	P, FP, G	Cool, ≤6 °C,[18] add zinc acetate plus sodium hydroxide to pH >9.	7 days.
67. Sulfite	P, FP, G	None required	Analyze within 15 minutes.
68. Surfactants	P, FP, G	Cool, ≤6 °C [18]	48 hours.
69. Temperature	P, FP, G	None required	Analyze within 15 minutes.
73. Turbidity	P, FP, G	Cool, ≤6 °C [18]	48 hours.
Table IC—Organic Tests [8]			
13, 18–20, 22, 24, 25, 27,28, 34–37, 39–43, 45–47, 56, 76, 104, 105, 108–111, 113. Purgeable Halocarbons.	G, FP-lined septum	Cool, ≤6 °C,[18] 0.008% $Na_2S_2O_3$,[5] HCl to pH 2.	14 days.
26. 2-Chloroethylvinyl ether	G, FP-lined septum	Cool, ≤6 °C,[18] 0.008% $Na_2S_2O_3$[5].	14 days.
6, 57, 106. Purgeable aromatic hydrocarbons.	G, FP-lined septum	Cool, ≤6 °C,[18] 0.008% $Na_2S_2O_3$,[5] HCl to pH 2 [9].	14 days.[9]
3, 4. Acrolein and acrylonitrile	G, FP-lined septum	Cool, ≤6 °C,[18] 0.008% $Na_2S_2O_3$, pH to 4–5 [10].	14 days.[10]
23, 30, 44, 49, 53, 77, 80, 81, 98, 100, 112. Phenols [11].	G, FP-lined cap	Cool, ≤6 °C,[18] 0.008% $Na_2S_2O_3$.	7 days until extraction, 40 days after extraction.
7, 38. Benzidines [11 12]	G, FP-lined cap	Cool, ≤6 °C,[18] 0.008% $Na_2S_2O_3$[5].	7 days until extraction.[13]
14, 17, 48, 50–52. Phthalate esters [11].	G, FP-lined cap	Cool, ≤6 °C [18]	7 days until extraction, 40 days after extraction.
82–84. Nitrosamines [11 14]	G, FP-lined cap	Cool, ≤6 °C,[18] store in dark, 0.008% $Na_2S_2O_3$ [5].	7 days until extraction, 40 days after extraction.
88–94. PCBs [11]	G, FP-lined cap	Cool, ≤6 °C [18]	1 year until extraction, 1 year after extraction.
54, 55, 75, 79. Nitroaromatics and isophorone [11].	G, FP-lined cap	Cool, ≤6 °C,[18] store in dark, 0.008% $Na_2S_2O_3$ [5].	7 days until extraction, 40 days after extraction.
1, 2, 5, 8–12, 32, 33, 58, 59, 74, 78, 99, 101. Polynuclear aromatic hydrocarbons [11].	G, FP-lined cap	Cool, ≤6 °C,[18] store in dark, 0.008% $Na_2S_2O_3$ [5].	7 days until extraction, 40 days after extraction.
15, 16, 21, 31, 87. Haloethers [11].	G, FP-lined cap	Cool, ≤6 °C,[18] 0.008% $Na_2S_2O_3$ [5].	7 days until extraction, 40 days after extraction.
29, 35–37, 63–65, 107. Chlorinated hydrocarbons [11].	G, FP-lined cap	Cool, ≤6 °C [18]	7 days until extraction, 40 days after extraction.

TABLE II—REQUIRED CONTAINERS, PRESERVATION TECHNIQUES, AND HOLDING TIMES—Continued

Parameter number/name	Container [1]	Preservation [2] [3]	Maximum holding time [4]
60–62, 66–72, 85, 86, 95–97, 102, 103. CDDs/CDFs [11].	G	See footnote 11	See footnote 11.
Aqueous Samples: Field and Lab Preservation.	G	Cool, ≤6 °C,[18] 0.008% $Na_2S_2O_3$,[5] pH <9.	1 year.
Solids and Mixed-Phase Samples: Field Preservation.	G	Cool, ≤6 °C [18]	7 days.
Tissue Samples: Field Preservation.	G	Cool, ≤6 °C [18]	24 hours.
Solids, Mixed-Phase, and Tissue Samples: Lab Preservation.	G	Freeze, ≤ − 10 °C	1 year.
114–118. Alkylated phenols	G	Cool, <6 °C, H_2SO_4 to pH <2	28 days until extraction, 40 days after extraction.
119. Adsorbable Organic Halides (AOX).	G	Cool, <6 °C, 0.008% $Na_2S_2O_3$, HNO_3 to pH <2.	Hold *at least* 3 days, but not more than 6 months.
120. Chlorinated Phenolics	G, FP-lined cap	Cool, <6 °C, 0.008% $Na_2S_2O_3$, H_2SO_4 to pH <2.	30 days until acetylation, 30 days after acetylation.
Table ID—Pesticides Tests			
1–70. Pesticides [11]	G, FP-lined cap	Cool, ≤6 °C,[18] pH 5–9 [15]	7 days until extraction, 40 days after extraction.
Table IE—Radiological Tests			
1–5. Alpha, beta, and radium	P, FP, G	HNO_3 to pH <2	6 months.
Table IH—Bacterial Tests			
1–4. Coliform, total, fecal	PA, G	Cool, <10 °C, 0.008% $Na_2S_2O_3$[5].	8 hours.[22] [23]
5. *E. coli*	PA, G	Cool, <10 °C, 0. 008% $Na_2S_2O_3$ [5].	8 hours.[22]
6. Fecal streptococci	PA, G	Cool, <10 °C, 0.008% $Na_2S_2O_3$ [5].	8 hours.[22]
7. Enterococci	PA, G	Cool, <10 °C, 0. 008% $Na_2S_2O_3$ [5].	8 hours.[22]
Table IH—Protozoan Tests			
8. *Cryptosporidium*	LDPE; field filtration	1–10 °C	96 hours.[21]
9. *Giardia*	LDPE; field filtration	1–10 °C	96 hours.[21]

[1] "P" is for polyethylene; "FP" is fluoropolymer (polytetrafluoroethylene (PTFE); Teflon®), or other fluoropolymer, unless stated otherwise in this Table II; "G" is glass; "PA" is any plastic that is made of a sterilizable material (polypropylene or other autoclavable plastic); "LDPE" is low density polyethylene.

[2] Except where noted in this Table II and the method for the parameter, preserve each grab sample within 15 minutes of collection. For a composite sample collected with an automated sample (e.g., using a 24-hour composite sample; see 40 CFR 122.21(g)(7)(i) or 40 CFR part 403, appendix E), refrigerate the sample at ≤6 °C during collection unless specified otherwise in this Table II or in the method(s). For a composite sample to be split into separate aliquots for preservation and/or analysis, maintain the sample at ≤6 °C, unless specified otherwise in this Table II or in the method(s), until collection, splitting, and preservation is completed. Add the preservative to the sample container prior to sample collection when the preservative will not compromise the integrity of a grab sample, a composite sample, or aliquot split from a composite sample within 15 minutes of collection. If a composite measurement is required but a composite sample would compromise sample integrity, individual grab samples must be collected at prescribed time intervals (e.g., 4 samples over the course of a day, at 6-hour intervals). Grab samples must be analyzed separately and the concentrations averaged. Alternatively, grab samples may be collected in the field and composited in the laboratory if the compositing procedure produces results equivalent to results produced by arithmetic averaging of results of analysis of individual grab samples. For examples of laboratory compositing procedures, see EPA Method 1664 Rev. A (oil and grease) and the procedures at 40 CFR 141.24(f)(14)(iv) and (v) (volatile organics).

[3] When any sample is to be shipped by common carrier or sent via the U.S. Postal Service, it must comply with the Department of Transportation Hazardous Materials Regulations (49 CFR part 172). The person offering such material for transportation is responsible for ensuring such compliance. For the preservation requirement of Table II, the Office of Hazardous Materials, Materials Transportation Bureau, Department of Transportation has determined that the Hazardous Materials Regulations do not apply to the following materials: Hydrochloric acid (HCl) in water solutions at concentrations of 0.04% by weight or less (pH about 1.96 or greater; Nitric acid (HNO_3) in water solutions at concentrations of 0.15% by weight or less (pH about 1.62 or greater); Sulfuric acid (H_2SO_4) in water solutions at concentrations of 0.35% by weight or less (pH about 1.15 or greater); and Sodium hydroxide (NaOH) in water solutions at concentrations of 0.080% by weight or less (pH about 12.30 or less).

[4] Samples should be analyzed as soon as possible after collection. The times listed are the maximum times that samples may be held before the start of analysis and still be considered valid. Samples may be held for longer periods only if the permittee or monitoring laboratory have data on file to show that, for the specific types of samples under study, the analytes are stable for the longer time, and has received a variance from the Regional ATP Coordinator under § 136.3(e). For a grab sample, the holding time begins at the time of collection. For a composite sample collected with an automated sampler (e.g., using a 24-hour composite sampler; see 40 CFR 122.21(g)(7)(i) or 40 CFR part 403, appendix E), the holding time begins at the time of the end of collection of the composite sample. For a set of grab samples composited in the field or laboratory, the holding time begins at the time of collection of the last grab sample in the set. Some samples may not be stable for the maximum time period given in the table. A permittee or monitoring laboratory is obligated to hold the sample for a shorter time if it knows that a shorter time is necessary to maintain sample stability. See § 136.3(e) for details. The date and time of collection of an individual grab sample is the date and time at which the sample is collected. For a set of grab samples to be composited, and that are all collected on the same calendar date, the date of collection is the date on which the samples are collected. For a set of grab samples to be composited, and that are collected across two calendar dates, the date of collection is the dates of the two days; e.g., November 14–15. For a composite sample collected automatically on a given date, the date of collection is the date on which the sample is collected. For a composite sample collected automatically, and that is collected across two calendar dates, the date of collection is the dates of the two days; e.g., November 14–15. For static-renewal toxicity tests, each grab or composite sample may also be used to prepare test solutions for renewal at 24 h, 48 h, and/or 72 h after first use, if stored at 0–6 °C, with minimum head space.

[5] ASTM D7365–09a specifies treatment options for samples containing oxidants (e.g., chlorine) for cyanide analyses. Also, Section 9060A of Standard Methods for the Examination of Water and Wastewater (20th and 21st editions) addresses dechlorination procedures for microbiological analyses.

[6] Sampling, preservation and mitigating interferences in water samples for analysis of cyanide are described in ASTM D7365–09a. There may be interferences that are not mitigated by the analytical test methods or D7365–09a. Any technique for removal or suppression of interference may be employed, provided the laboratory demonstrates that it more accurately measures cyanide through quality control measures described in the analytical test method. Any removal or suppression technique not described in D7365–09a or the analytical test method must be documented along with supporting data.

[7] For dissolved metals, filter grab samples within 15 minutes of collection and before adding preservatives. For a composite sample collected with an automated sampler (e.g., using a 24-hour composite sampler; see 40 CFR 122.21(g)(7)(i) or 40 CFR part 403, appendix E), filter the sample within 15 minutes after completion of collection and before adding preservatives. If it is known or suspected that dissolved sample integrity will be compromised during collection of a composite sample collected automatically over time (e.g., by interchange of a metal between dissolved and suspended forms), collect and filter grab samples to be composited (footnote 2) in place of a composite sample collected automatically.

[8] Guidance applies to samples to be analyzed by GC, LC, or GC/MS for specific compounds.

[9] If the sample is not adjusted to pH 2, then the sample must be analyzed within seven days of sampling.

[10] The pH adjustment is not required if acrolein will not be measured. Samples for acrolein receiving no pH adjustment must be analyzed within 3 days of sampling.

[11] When the extractable analytes of concern fall within a single chemical category, the specified preservative and maximum holding times should be observed for optimum safeguard of sample integrity (*i.e.,* use all necessary preservatives and hold for the shortest time listed). When the analytes of concern fall within two or more chemical categories, the sample may be preserved by cooling to ≤6 °C, reducing residual chlorine with 0.008% sodium thiosulfate, storing in the dark, and adjusting the pH to 6–9; samples preserved in this manner may be held for seven days before extraction and for forty days after extraction. Exceptions to this optional preservation and holding time procedure are noted in footnote 5 (regarding the requirement for thiosulfate reduction), and footnotes 12, 13 (regarding the analysis of benzidine).

[12] If 1,2-diphenylhydrazine is likely to be present, adjust the pH of the sample to 4.0 ± 0.2 to prevent rearrangement to benzidine.

[13] Extracts may be stored up to 30 days at <0 °C.

[14] For the analysis of diphenylnitrosamine, add 0.008% $Na_2S_2O_3$ and adjust pH to 7–10 with NaOH within 24 hours of sampling.

[15] The pH adjustment may be performed upon receipt at the laboratory and may be omitted if the samples are extracted within 72 hours of collection. For the analysis of aldrin, add 0.008% $Na_2S_2O_3$.

[16] Place sufficient ice with the samples in the shipping container to ensure that ice is still present when the samples arrive at the laboratory. However, even if ice is present when the samples arrive, immediately measure the temperature of the samples and confirm that the preservation temperature maximum has not been exceeded. In the isolated cases where it can be documented that this holding temperature cannot be met, the permittee can be given the option of on-site testing or can request a variance. The request for a variance should include supportive data which show that the toxicity of the effluent samples is not reduced because of the increased holding temperature. Aqueous samples must not be frozen. Hand-delivered samples used on the day of collection do not need to be cooled to 0 to 6 °C prior to test initiation.

[17] Samples collected for the determination of trace level mercury (<100 ng/L) using EPA Method 1631 must be collected in tightly-capped fluoropolymer or glass bottles and preserved with BrCl or HCl solution within 48 hours of sample collection. The time to preservation may be extended to 28 days if a sample is oxidized in the sample bottle. A sample collected for dissolved trace level mercury should be filtered in the laboratory within 24 hours of the time of collection. However, if circumstances preclude overnight shipment, the sample should be filtered in a designated clean area in the field in accordance with procedures given in Method 1669. If sample integrity will not be maintained by shipment to and filtration in the laboratory, the sample must be filtered in a designated clean area in the field within the time period necessary to maintain sample integrity. A sample that has been collected for determination of total or dissolved trace level mercury must be analyzed within 90 days of sample collection.

[18] Aqueous samples must be preserved at ≤6 °C, and should not be frozen unless data demonstrating that sample freezing does not adversely impact sample integrity is maintained on file and accepted as valid by the regulatory authority. Also, for purposes of NPDES monitoring, the specification of "≤ °C" is used in place of the "4 °C" and "<4 °C" sample temperature requirements listed in some methods. It is not necessary to measure the sample temperature to three significant figures (1/100th of 1 degree); rather, three significant figures are specified so that rounding down to 6 °C may not be used to meet the ≤6 °C requirement. The preservation temperature does not apply to samples that are analyzed immediately (less than 15 minutes).

[19] An aqueous sample may be collected and shipped without acid preservation. However, acid must be added at least 24 hours before analysis to dissolve any metals that adsorb to the container walls. If the sample must be analyzed within 24 hours of collection, add the acid immediately (see footnote 2). Soil and sediment samples do not need to be preserved with acid. The allowances in this footnote supersede the preservation and holding time requirements in the approved metals methods.

[20] To achieve the 28-day holding time, use the ammonium sulfate buffer solution specified in EPA Method 218.6. The allowance in this footnote supersedes preservation and holding time requirements in the approved hexavalent chromium methods, unless this supersession would compromise the measurement, in which case requirements in the method must be followed.

[21] Holding time is calculated from time of sample collection to elution for samples shipped to the laboratory in bulk and calculated from the time of sample filtration to elution for samples filtered in the field.

[22] Sample analysis should begin as soon as possible after receipt; sample incubation must be started no later than 8 hours from time of collection.

[23] For fecal coliform samples for sewage sludge (biosolids) only, the holding time is extended to 24 hours for the following sample types using either EPA Method 1680 (LTB–EC) or 1681 (A–1): Class A composted, Class B aerobically digested, and Class B anaerobically digested.

[24] The immediate filtration requirement in orthophosphate measurement is to assess the dissolved or bio-available form of orthophosphorus (*i.e.,* that which passes through a 0.45-micron filter), hence the requirement to filter the sample immediately upon collection (*i.e.,* within 15 minutes of collection).

[38 FR 28758, Oct. 16, 1973]

EDITORIAL NOTE: For FEDERAL REGISTER citations affecting § 136.3, see the List of CFR Sections Affected, which appears in the Finding Aids section of the printed volume and at *www.govinfo.gov*.

§ 136.4 Application for and approval of alternate test procedures for nationwide use.

(a) A written application for review of an alternate test procedure (alternate method) for nationwide use may be made by letter via email or by hard copy in triplicate to the National Alternate Test Procedure (ATP) Program Coordinator (National Coordinator), Office of Science and Technology (4303T), Office of Water, U.S. Environmental Protection Agency, 1200 Pennsylvania Ave. NW., Washington, DC 20460. Any application for an ATP under this paragraph (a) shall:

(1) Provide the name and address of the responsible person or firm making the application.

(2) Identify the pollutant(s) or parameter(s) for which nationwide approval of an alternate test procedure is being requested.

(3) Provide a detailed description of the proposed alternate test procedure, together with references to published or other studies confirming the general applicability of the alternate test procedure for the analysis of the pollutant(s) or parameter(s) in wastewater discharges from representative and specified industrial or other categories.

(4) Provide comparability data for the performance of the proposed alternative test procedure compared to the performance of the reference method.

(b) The National Coordinator may request additional information and analyses from the applicant in order to evaluate whether the alternate test procedure satisfies the applicable requirements of this part.

(c) *Approval for nationwide use.* (1) After a review of the application and any additional analyses requested from the applicant, the National Coordinator will notify the applicant, in writing, of whether the National Coordinator will recommend approval or disapproval of the alternate test procedure for nationwide use in CWA programs. If the application is not recommended for approval, the National Coordinator may specify what additional information might lead to a reconsideration of the application and notify the Regional Alternate Test Procedure Coordinators of the disapproval recommendation. Based on the National Coordinator's recommended disapproval of a proposed alternate test procedure and an assessment of any current approvals for limited uses for the unapproved method, the Regional ATP Coordinator may decide to withdraw approval of the method for limited use in the Region.

(2) Where the National Coordinator has recommended approval of an applicant's request for nationwide use of an alternate test procedure, the National Coordinator will notify the applicant. The National Coordinator will also notify the Regional ATP Coordinators that they may consider approval of this alternate test procedure for limited use in their Regions based on the information and data provided in the application until the alternate test procedure is approved by publication in a final rule in the FEDERAL REGISTER.

(3) EPA will propose to amend this part to include the alternate test procedure in § 136.3. EPA shall make available for review all the factual bases for its proposal, including the method, any performance data submitted by the applicant and any available EPA analysis of those data.

(4) Following public comment, EPA shall publish in the FEDERAL REGISTER a final decision on whether to amend this part to include the alternate test procedure as an approved analytical method for nationwide use.

(5) Whenever the National Coordinator has recommended approval of an applicant's ATP request for nationwide use, any person may request an approval of the method for limited use under § 136.5 from the EPA Region.

[77 FR 29809, May 18, 2012, as amended at 82 FR 40874, Aug. 28, 2017]

§ 136.5 Approval of alternate test procedures for limited use.

(a) Any person may request the Regional ATP Coordinator to approve the use of an alternate test procedure in the Region.

(b) When the request for the use of an alternate test procedure concerns use in a State with an NPDES permit program approved pursuant to section 402 of the Act, the requestor shall first submit an application for limited use to the Director of the State agency having responsibility for issuance of NPDES permits within such State (*i.e.*, permitting authority). The Director will forward the application to the Regional ATP Coordinator with a recommendation for or against approval.

(c) Any application for approval of an alternate test procedure for limited use may be made by letter, email or by hard copy. The application shall include the following:

(1) Provide the name and address of the applicant and the applicable ID number of the existing or pending permit(s) and issuing agency for which use of the alternate test procedure is requested, and the discharge serial number.

(2) Identify the pollutant or parameter for which approval of an alternate test procedure is being requested.

(3) Provide justification for using testing procedures other than those specified in Tables IA through IH of § 136.3, or in the NPDES permit.

(4) Provide a detailed description of the proposed alternate test procedure, together with references to published studies of the applicability of the alternate test procedure to the effluents in question.

(5) Provide comparability data for the performance of the proposed alternate test procedure compared to the performance of the reference method.

(d) *Approval for limited use.* (1) The Regional ATP Coordinator will review the application and notify the applicant and the appropriate State agency of approval or rejection of the use of the alternate test procedure. The approval may be restricted to use only with respect to a specific discharge or facility (and its laboratory) or, at the discretion of the Regional ATP Coordinator, to all dischargers or facilities (and their associated laboratories) specified in the approval for the Region. If the application is not approved, the Regional ATP Coordinator shall specify what additional information might lead to a reconsideration of the application.

(2) The Regional ATP Coordinator will forward a copy of every approval and rejection notification to the National Alternate Test Procedure Coordinator.

[77 FR 29809, May 18, 2012, as amended at 82 FR 40875, Aug. 28, 2017]

§ 136.6 Method modifications and analytical requirements.

(a) *Definitions of terms used in this section*—(1) *Analyst* means the person or laboratory using a test procedure (analytical method) in this part.

(2) *Chemistry of the method* means the reagents and reactions used in a test procedure that allow determination of the analyte(s) of interest in an environmental sample.

(3) *Determinative technique* means the way in which an analyte is identified and quantified (e.g., colorimetry, mass spectrometry).

(4) *Equivalent performance* means that the modified method produces results that meet or exceed the QC acceptance criteria of the approved method.

(5) *Method-defined analyte* means an analyte defined solely by the method used to determine the analyte. Such an analyte may be a physical parameter, a parameter that is not a specific chemical, or a parameter that may be comprised of a number of substances. Examples of such analytes include temperature, oil and grease, total suspended solids, total phenolics, turbidity, chemical oxygen demand, and biochemical oxygen demand.

(6) *QC* means ''quality control.''

(b) *Method modifications.* (1) If the underlying chemistry and determinative technique in a modified method are essentially the same as an approved Part 136 method, then the modified method is an equivalent and acceptable alternative to the approved method provided the requirements of this section are met. However, those who develop or use a modification to an approved (Part 136) method must document that

the performance of the modified method, in the matrix to which the modified method will be applied, is equivalent to the performance of the approved method. If such a demonstration cannot be made and documented, then the modified method is not an acceptable alternative to the approved method. Supporting documentation must, if applicable, include the routine initial demonstration of capability and ongoing QC including determination of precision and accuracy, detection limits, and matrix spike recoveries. Initial demonstration of capability typically includes analysis of four replicates of a mid-level standard and a method detection limit study. Ongoing quality control typically includes method blanks, mid-level laboratory control samples, and matrix spikes (QC is as specified in the method). The method is considered equivalent if the quality control requirements in the reference method are achieved. Where the laboratory is using a vendor-supplied method, it is the QC criteria in the reference method, not the vendor's method, that must be met to show equivalency. Where a sample preparation step is required (*i.e.*, digestion, distillation), QC tests are to be run using standards treated in the same way as the samples. The method user's Standard Operating Procedure (SOP) must clearly document the modifications made to the reference method. Examples of allowed method modifications are listed in this section. If the method user is uncertain whether a method modification is allowed, the Regional ATP Coordinator or Director should be contacted for approval *prior* to implementing the modification. The method user should also complete necessary performance checks to verify that acceptable performance is achieved with the method modification *prior* to analyses of compliance samples.

(2) *Requirements*. The modified method must meet or exceed performance of the approved method(s) for the analyte(s) of interest, as documented by meeting the initial and ongoing quality control requirements in the method.

(i) *Requirements for establishing equivalent performance*. If the approved method contains QC tests and QC acceptance criteria, the modified method must use these QC tests and the modified method must meet the QC acceptance criteria with the following conditions:

(A) The analyst may only rely on QC tests and QC acceptance criteria in a method if it includes wastewater matrix QC tests and QC acceptance criteria (e.g., matrix spikes) and both initial (start-up) and ongoing QC tests and QC acceptance criteria.

(B) If the approved method does not contain QC tests and QC acceptance criteria or if the QC tests and QC acceptance criteria in the method do not meet the requirements of this section, then the analyst must employ QC tests published in the ''equivalent'' of a Part 136 method that has such QC, or the essential QC requirements specified at 136.7, as applicable. If the approved method is from a compendium or VCSB and the QA/QC requirements are published in other parts of that organization's compendium rather than within the Part 136 method then that part of the organization's compendium must be used for the QC tests.

(C) In addition, the analyst must perform ongoing QC tests, including assessment of performance of the modified method on the sample matrix (e.g., analysis of a matrix spike/matrix spike duplicate pair for every twenty samples), and analysis of an ongoing precision and recovery sample (e.g., laboratory fortified blank or blank spike) and a blank with each batch of 20 or fewer samples.

(D) If the performance of the modified method in the wastewater matrix or reagent water does not meet or exceed the QC acceptance criteria, the method modification may not be used.

(ii) *Requirements for documentation*. The modified method must be documented in a method write-up or an addendum that describes the modification(s) to the approved method prior to the use of the method for compliance purposes. The write-up or addendum must include a reference number (e.g., method number), revision number, and revision date so that it may be referenced accurately. In addition, the organization that uses the modified method must document the results of QC tests and keep these records, along

with a copy of the method write-up or addendum, for review by an auditor.

(3) *Restrictions*. An analyst may not modify an approved Clean Water Act analytical method for a method-defined analyte. In addition, an analyst may not modify an approved method if the modification would result in measurement of a different form or species of an analyte. Changes in method procedures are not allowed if such changes would alter the defined chemistry (*i.e.,* method principle) of the unmodified method. For example, phenol method 420.1 or 420.4 defines phenolics as ferric iron oxidized compounds that react with 4-aminoantipyrine (4-AAP) at pH 10 after being distilled from acid solution. Because total phenolics represents a group of compounds that all react at different efficiencies with 4-AAP, changing test conditions likely would change the behavior of these different phenolic compounds. An analyst may not modify any sample collection, preservation, or holding time requirements of an approved method. Such modifications to sample collection, preservation, and holding time requirements do not fall within the scope of the flexibility allowed at § 136.6. Method flexibility refers to modifications of the analytical procedures used for identification and measurement of the analyte only and does not apply to sample collection, preservation, or holding time procedures, which may only be modified as specified in § 136.3(e).

(4) *Allowable changes*. Except as noted under paragraph (b)(3) of this section, an analyst may modify an approved test procedure (analytical method) provided that the underlying reactions and principles used in the approved method remain essentially the same, and provided that the requirements of this section are met. If equal or better performance can be obtained with an alternative reagent, then it is allowed. A laboratory wishing to use these modifications must demonstrate acceptable method performance by performing and documenting all applicable initial demonstration of capability and ongoing QC tests and meeting all applicable QC acceptance criteria as described in § 136.7. Some examples of the allowed types of changes, provided the requirements of this section are met include:

(i) Changes between manual method, flow analyzer, and discrete instrumentation.

(ii) Changes in chromatographic columns or temperature programs.

(iii) Changes between automated and manual sample preparation, such as digestions, distillations, and extractions; in-line sample preparation is an acceptable form of automated sample preparation for CWA methods.

(iv) In general, ICP–MS is a sensitive and selective detector for metal analysis; however isobaric interference can cause problems for quantitative determination, as well as identification based on the isotope pattern. Interference reduction technologies, such as collision cells or reaction cells, are designed to reduce the effect of spectroscopic interferences that may bias results for the element of interest. The use of interference reduction technologies is allowed, provided the method performance specifications relevant to ICP–MS measurements are met.

(v) The use of EPA Method 200.2 or the sample preparation steps from EPA Method 1638, including the use of closed-vessel digestion, is allowed for EPA Method 200.8, provided the method performance specifications relevant to the ICP–MS are met.

(vi) Changes in pH adjustment reagents. Changes in compounds used to adjust pH are acceptable as long as they do not produce interference. For example, using a different acid to adjust pH in colorimetric methods.

(vii) Changes in buffer reagents are acceptable provided that the changes do not produce interferences.

(viii) Changes in the order of reagent addition are acceptable provided that the change does not alter the chemistry and does not produce an interference. For example, using the same reagents, but adding them in different order, or preparing them in combined or separate solutions (so they can be added separately), is allowed, provided reagent stability or method performance is equivalent or improved.

(ix) Changes in calibration range (provided that the modified range covers any relevant regulatory limit and

the method performance specifications for calibration are met).

(x) Changes in calibration model. (A) Linear calibration models do not adequately fit calibration data with one or two inflection points. For example, vendor-supplied data acquisition and processing software on some instruments may provide quadratic fitting functions to handle such situations. If the calibration data for a particular analytical method routinely display quadratic character, using quadratic fitting functions may be acceptable. In such cases, the minimum number of calibrators for second order fits should be six, and in no case should concentrations be extrapolated for instrument responses that exceed that of the most concentrated calibrator. Examples of methods with nonlinear calibration functions include chloride by SM4500–Cl–E–1997, hardness by EPA Method 130.1, cyanide by ASTM D6888 or OIA1677, Kjeldahl nitrogen by PAI–DK03, and anions by EPA Method 300.0.

(B) As an alternative to using the average response factor, the quality of the calibration may be evaluated using the Relative Standard Error (RSE). The acceptance criterion for the RSE is the same as the acceptance criterion for Relative Standard Deviation (RSD), in the method. RSE is calculated as:

$$\%\,RSE = 100 x \sqrt{\frac{\sum_{i=1}^{n}\left[\frac{x_i' - x_i}{x_i}\right]^2}{(n-p)}}$$

Where:

x'_i = Calculated concentration at level i

x_i = Actual concentration of the calibration level i

n = Number of calibration points

p = Number of terms in the fitting equation (average = 1, linear = 2, quadratic = 3)

(C) Using the RSE as a metric has the added advantage of allowing the same numerical standard to be applied to the calibration model, regardless of the form of the model. Thus, if a method states that the RSD should be ≤20% for the traditional linear model through the origin, then the RSE acceptance limit can remain ≤20% as well. Similarly, if a method provides an RSD acceptance limit of ≤15%, then that same figure can be used as the acceptance limit for the RSE. The RSE may be used as an alternative to correlation coefficients and coefficients of determination for evaluating calibration curves for any of the methods at part 136. If the method includes a numerical criterion for the RSD, then the same numerical value is used for the RSE. Some older methods do not include any criterion for the calibration curve—for these methods, if RSE is used the value should be ≤20%. Note that the use of the RSE is included as an alternative to the use of the correlation coefficient as a measure of the suitability of a calibration curve. It is not necessary to evaluate both the RSE and the correlation coefficient.

(xi) Changes in equipment such as equipment from a vendor different from the one specified in the method.

(xii) The use of micro or midi distillation apparatus in place of macro distillation apparatus.

(xiii) The use of prepackaged reagents.

(xiv) The use of digital titrators and methods where the underlying chemistry used for the determination is similar to that used in the approved method.

(xv) Use of selected ion monitoring (SIM) mode for analytes that cannot be effectively analyzed in full-scan mode and reach the required sensitivity. False positives are more of a concern when using SIM analysis, so at a minimum, one quantitation and two qualifying ions must be monitored for each analyte (unless fewer than three ions with intensity greater than 15% of the

base peak are available). The ratio of each of the two qualifying ions to the quantitation ion must be evaluated and should agree with the ratio observed in an authentic standard within ±20 percent. Analyst judgment must be applied to the evaluation of ion ratios because the ratios can be affected by coeluting compounds present in the sample matrix. The signal-to-noise ratio of the least sensitive ion should be at least 3:1. Retention time in the sample should match within 0.05 minute of an authentic standard analyzed under identical conditions. Matrix interferences can cause minor shifts in retention time and may be evident as shifts in the retention times of the internal standards. The total scan time should be such that a minimum of eight scans are obtained per chromatographic peak.

(xvi) Changes are allowed in purge-and-trap sample volumes or operating conditions. Some examples are:

(A) Changes in purge time and purge-gas flow rate. A change in purge time and purge-gas flow rate is allowed provided that sufficient total purge volume is used to achieve the required minimum detectible concentration and calibration range for all compounds. In general, a purge rate in the range 20–200 mL/min and a total purge volume in the range 240–880 mL are recommended.

(B) Use of nitrogen or helium as a purge gas, provided that the required sensitivities for all compounds are met.

(C) Sample temperature during the purge state. Gentle heating of the sample during purging (e.g., 40 °C) increases purging efficiency of hydrophilic compounds and may improve sample-to-sample repeatability because all samples are purged under precisely the same conditions.

(D) Trap sorbent. Any trap design is acceptable, provided that the data acquired meet all QC criteria.

(E) Changes to the desorb time. Shortening the desorb time (e.g., from4 minutes to 1 minute) may not affect compound recoveries, and can shorten overall cycle time and significantly reduce the amount of water introduced to the analytical system, thus improving the precision of analysis, especially for water-soluble analytes. A desorb time of four minutes is recommended, however a shorter desorb time may be used, provided that all QC specifications in the method are met.

(F) Use of water management techniques is allowed. Water is always collected on the trap along with the analytes and is a significant interference for analytical systems (GC and GC/MS). Modern water management techniques (e.g., dry purge or condensation points) can remove moisture from the sample stream and improve analytical performance.

(xvii) If the characteristics of a wastewater matrix prevent efficient recovery of organic pollutants and prevent the method from meeting QC requirements, the analyst may attempt to resolve the issue by adding salts to the sample, provided that such salts do not react with or introduce the target pollutant into the sample (as evidenced by the analysis of method blanks, laboratory control samples, and spiked samples that also contain such salts), and that all requirements of paragraph (b)(2) of this section are met. Samples having residual chlorine or other halogen must be dechlorinated prior to the addition of such salts.

(xviii) If the characteristics of a wastewater matrix result in poor sample dispersion or reagent deposition on equipment and prevent the analyst from meeting QC requirements, the analyst may attempt to resolve the issue by adding a inert surfactant that does not affect the chemistry of the method, such as Brij-35 or sodium dodecyl sulfate (SDS), provided that such surfactant does not react with or introduce the target pollutant into the sample (as evidenced by the analysis of method blanks, laboratory control samples, and spiked samples that also contain such surfactant) and that all requirements of paragraph (b)(1) and (b)(2) of this section are met. Samples having residual chlorine or other halogen must be dechlorinated prior to the addition of such surfactant.

(xix) The use of gas diffusion (using pH change to convert the analyte to gaseous form and/or heat to separate an analyte contained in steam from the sample matrix) across a hydrophobic semi-permeable membrane to separate the analyte of interest from the sample

matrix may be used in place of manual or automated distillation in methods for analysis such as ammonia, total cyanide, total Kjeldahl nitrogen, and total phenols. These procedures do not replace the digestion procedures specified in the approved methods and must be used in conjunction with those procedures.

(xx) Changes in equipment operating parameters such as the monitoring wavelength of a colorimeter or the reaction time and temperature as needed to achieve the chemical reactions defined in the unmodified CWA method. For example, molybdenum blue phosphate methods have two absorbance maxima, one at about 660 nm and another at about 880 nm. The former is about 2.5 times less sensitive than the latter. Wavelength choice provides a cost-effective, dilution-free means to increase sensitivity of molybdenum blue phosphate methods.

(xxi) Interchange of oxidants, such as the use of titanium oxide in UV-assisted automated digestion of TOC and total phosphorus, as long as complete oxidation can be demonstrated.

(xxii) Use of an axially viewed torch with Method 200.7.

(c) The permittee must notify their permitting authority of the intent to use a modified method. Such notification should be of the form ''Method xxx has been modified within the flexibility allowed in 40 CFR 136.6.'' The permittee may indicate the specific paragraph of § 136.6 allowing the method modification. Specific details of the modification need not be provided, but must be documented in the Standard Operating Procedure (SOP) and maintained by the analytical laboratory that performs the analysis.

[77 FR 29810, May 18, 2012, as amended at 82 FR 40875, Aug. 28, 2017]

§ 136.7 Quality assurance and quality control.

The permittee/laboratory shall use suitable QA/QC procedures when conducting compliance analyses with any part 136 chemical method or an alternative method specified by the permitting authority. These QA/QC procedures are generally included in the analytical method or may be part of the methods compendium for approved Part 136 methods from a consensus organization. For example, Standard Methods contains QA/QC procedures in the Part 1000 section of the Standard Methods Compendium. The permittee/laboratory shall follow these QA/QC procedures, as described in the method or methods compendium. If the method lacks QA/QC procedures, the permittee/laboratory has the following options to comply with the QA/QC requirements:

(a) Refer to and follow the QA/QC published in the ''equivalent'' EPA method for that parameter that has such QA/QC procedures;

(b) Refer to the appropriate QA/QC section(s) of an approved part 136 method from a consensus organization compendium;

(c)(1) Incorporate the following twelve quality control elements, where applicable, into the laboratory's documented standard operating procedure (SOP) for performing compliance analyses when using an approved part 136 method when the method lacks such QA/QC procedures. One or more of the twelve QC elements may not apply to a given method and may be omitted if a written rationale is provided indicating why the element(s) is/are inappropriate for a specific method.

(i) Demonstration of Capability (DOC);

(ii) Method Detection Limit (MDL);

(iii) Laboratory reagent blank (LRB), also referred to as method blank (MB);

(iv) Laboratory fortified blank (LFB), also referred to as a spiked blank, or laboratory control sample (LCS);

(v) Matrix spike (MS) and matrix spike duplicate (MSD), or laboratory fortified matrix (LFM) and LFM duplicate, may be used for suspected matrix interference problems to assess precision;

(vi) Internal standards (for GC/MS analyses), surrogate standards (for organic analysis) or tracers (for radiochemistry);

(vii) Calibration (initial and continuing), also referred to as initial calibration verification (ICV) and continuing calibration verification (CCV);

(viii) Control charts (or other trend analyses of quality control results);

(ix) Corrective action (root cause analysis);

(x) QC acceptance criteria;

(xi) Definitions of preparation and analytical batches that may drive QC frequencies; and

(xii) Minimum frequency for conducting all QC elements.

(2) These twelve quality control elements must be clearly documented in the written standard operating procedure for each analytical method not containing QA/QC procedures, where applicable.

[77 FR 29813, May 18, 2012]

APPENDIX A TO PART 136—METHODS FOR ORGANIC CHEMICAL ANALYSIS OF MUNICIPAL AND INDUSTRIAL WASTEWATER

METHOD 601—PURGEABLE HALOCARBONS

1. Scope and Application

1.1 This method covers the determination of 29 purgeable halocarbons.

The following parameters may be determined by this method:

Parameter	STORET No.	CAS No.
Bromodichloromethane	32101	75–27–4
Bromoform	32104	75–25–2
Bromomethane	34413	74–83–9
Carbon tetrachloride	32102	56–23–5
Chlorobenzene	34301	108–90–7
Chloroethane	34311	75–00–3
2-Chloroethylvinyl ether	34576	100–75–8
Chloroform	32106	67–66–3
Chloromethane	34418	74–87–3
Dibromochloromethane	32105	124–48–1
1,2-Dichlorobenzene	34536	95–50–1
1,3-Dichlorobenzene	34566	541–73–1
1,4-Dichlorobenzene	34571	106–46–7
Dichlorodifluoromethane	34668	75–71–8
1,1-Dichloroethane	34496	75–34–3
1,2-Dichloroethane	34531	107–06–2
1,1-Dichloroethane	34501	75–35–4
trans-1,2-Dichloroethene	34546	156–60–5
1,2-Dichloropropane	34541	78–87–5
cis-1,3-Dichloropropene	34704	10061–01–5
trans-1,3-Dichloropropene	34699	10061–02–6
Methylene chloride	34423	75–09–2
1,1,2,2-Tetrachloroethane	34516	79–34–5
Tetrachloroethene	34475	127–18–4
1,1,1-Trichloroethane	34506	71–55–6
1,1,2-Trichloroethane	34511	79–00–5
Tetrachloroethene	39180	79–01–6
Trichlorofluoromethane	34488	75–69–4
Vinyl chloride	39715	75–01–4

1.2 This is a purge and trap gas chromatographic (GC) method applicable to the determination of the compounds listed above in municipal and industrial discharges as provided under 40 CFR 136.1. When this method is used to analyze unfamiliar samples for any or all of the compounds above, compound identifications should be supported by at least one additional qualitative technique. This method describes analytical conditions for a second gas chromatographic column that can be used to confirm measurements made with the primary column. Method 624 provides gas chromatograph/mass spectrometer (GC/MS) conditions appropriate for the qualitative and quantitative confirmation of results for most of the parameters listed above.

1.3 The method detection limit (MDL, defined in Section 12.1)[1] for each parameter is listed in Table 1. The MDL for a specific wastewater may differ from those listed, depending upon the nature of interferences in the sample matrix.

1.4 Any modification of this method, beyond those expressly permitted, shall be considered as a major modification subject to application and approval of alternate test procedures under 40 CFR 136.4 and 136.5.

1.5 This method is restricted to use by or under the supervision of analysts experienced in the operation of a purge and trap system and a gas chromatograph and in the interpretation of gas chromatograms. Each analyst must demonstrate the ability to generate acceptable results with this method using the procedure described in Section 8.2.

2. Summary of Method

2.1 An inert gas is bubbled through a 5-mL water sample contained in a specially-designed purging chamber at ambient temperature. The halocarbons are efficiently transferred from the aqueous phase to the vapor phase. The vapor is swept through a sorbent trap where the halocarbons are trapped. After purging is completed, the trap is heated and backflushed with the inert gas to desorb the halocarbons onto a gas chromatographic column. The gas chromatograph is temperature programmed to separate the halocarbons which are then detected with a halide-specific detector.[2 3]

2.2 The method provides an optional gas chromatographic column that may be helpful in resolving the compounds of interest from interferences that may occur.

3. Interferences

3.1 Impurities in the purge gas and organic compounds outgassing from the plumbing ahead of the trap account for the majority of contamination problems. The analytical system must be demonstrated to be free from contamination under the conditions of the analysis by running laboratory reagent blanks as described in Section 8.1.3. The use of non-Teflon plastic tubing, non-Teflon thread sealants, or flow controllers with rubber components in the purge and trap system should be avoided.

3.2 Samples can be contaminated by diffusion of volatile organics (particularly fluorocarbons and methylene chloride) through the septum seal ilto the sample during shipment

and storage. A field reagent blank prepared from reagent water and carried through the sampling and handling protocol can serve as a check on such contamination.

3.3 Contamination by carry-over can occur whenever high level and low level samples are sequentially analyzed. To reduce carry-over, the purging device and sample syringe must be rinsed with reagent water between sample analyses. Whenever an unusually concentrated sample is encountered, it should be followed by an analysis of reagent water to check for cross contamination. For samples containing large amounts of water-soluble materials, suspended solids, high boiling compounds or high organohalide levels, it may be necessary to wash out the purging device with a detergent solution, rinse it with distilled water, and then dry it in a 105 °C oven between analyses. The trap and other parts of the system are also subject to contamination; therefore, frequent bakeout and purging of the entire system may be required.

4. Safety

4.1 The toxicity or carcinogenicity of each reagent used in this method has not been precisely defined; however, each chemical compound should be treated as a potential health hazard. From this viewpoint, exposure to these chemicals must be reduced to the lowest possible level by whatever means available. The laboratory is responsible for maintaining a current awareness file of OSHA regulations regarding the safe handling of the chemicals specified in this method. A reference file of material data handling sheets should also be made available to all personnel involved in the chemical analysis. Additional references to laboratory safety are available and have been identified[4 6] for the information of the analyst.

4.2 The following parameters covered by this method have been tentatively classified as known or suspected, human or mammalian carcinogens: carbon tetrachloride, chloroform, 1,4-dichlorobenzene, and vinyl chloride. Primary standards of these toxic compounds should be prepared in a hood. A NIOSH/MESA approved toxic gas respirator should be worn when the analyst handles high concentrations of these toxic compounds.

5. Apparatus and Materials

5.1 Sampling equipment, for discrete sampling.

5.1.1 Vial—25-mL capacity or larger, equipped with a screw cap with a hole in the center (Pierce #13075 or equivalent). Detergent wash, rinse with tap and distilled water, and dry at 105 °C before use.

5.1.2 Septum—Teflon-faced silicone (Pierce #12722 or equivalent). Detergent wash, rinse with tap and distilled water, and dry at 105 °C for 1 h before use.

5.2 Purge and trap system—The purge and trap system consists of three separate pieces of equipment: a purging device, trap, and desorber. Several complete systems are now commercially available.

5.2.1 The purging device must be designed to accept 5-mL samples with a water column at least 3 cm deep. The gaseous head space between the water column and the trap must have a total volume of less than 15 mL. The purge gas must pass through the water column as finely divided bubbles with a diameter of less than 3 mm at the origin. The purge gas must be introduced no more than 5 mm from the base of the water column. The purging device illustrated in Figure 1 meets these design criteria.

5.2.2 The trap must be at least 25 cm long and have an inside diameter of at least 0.105 in. The trap must be packed to contain the following minimum lengths of adsorbents: 1.0 cm of methyl silicone coated packing (Section 6.3.3), 7.7 cm of 2,6-diphenylene oxide polymer (Section 6.3.2), 7.7 cm of silica gel (Section 6.3.4), 7.7 cm of coconut charcoal (Section 6.3.1). If it is not necessary to analyze for dichlorodifluoromethane, the charcoal can be eliminated, and the polymer section lengthened to 15 cm. The minimum specifications for the trap are illustrated in Figure 2.

5.2.3 The desorber must be capable of rapidly heating the trap to 180 °C. The polymer section of the trap should not be heated higher than 180 °C and the remaining sections should not exceed 200 °C. The desorber illustrated in Figure 2 meets these design criteria.

5.2.4 The purge and trap system may be assembled as a separate unit or be coupled to a gas chromatograph as illustrated in Figures 3 and 4.

5.3 Gas chromatograph—An analytical system complete with a temperature programmable gas chromatograph suitable for on-column injection and all required accessories including syringes, analytical columns, gases, detector, and strip-chart recorder. A data system is recommended for measuring peak areas.

5.3.1 Column 1—8 ft long × 0.1 in. ID stainless steel or glass, packed with 1% SP–1000 on Carbopack B (60/80 mesh) or equivalent. This column was used to develop the method performance statements in Section 12. Guidelines for the use of alternate column packings are provided in Section 10.1.

5.3.2 Column 2—6 ft long × 0.1 in. ID stainless steel or glass, packed with chemically bonded n-octane on Porasil-C (100/120 mesh) or equivalent.

5.3.3 Detector—Electrolytic conductivity or microcoulometric detector. These types of detectors have proven effective in the analysis of wastewaters for the parameters listed

in the scope (Section 1.1). The electrolytic conductivity detector was used to develop the method performance statements in Section 12. Guidelines for the use of alternate detectors are provided in Section 10.1.

5.4 Syringes—5-mL glass hypodermic with Luerlok tip (two each), if applicable to the purging device.

5.5 Micro syringes—25-µL, 0.006 in. ID needle.

5.6 Syringe valve—2-way, with Luer ends (three each).

5.7 Syringe—5-mL, gas-tight with shut-off valve.

5.8 Bottle—15-mL, screw-cap, with Teflon cap liner.

5.9 Balance—Analytical, capable of accurately weighing 0.0001 g.

6. Reagents

6.1 Reagent water—Reagent water is defined as a water in which an interferent is not observed at the MDL of the parameters of interest.

6.1.1 Reagent water can be generated by passing tap water through a carbon filter bed containing about 1 lb of activated carbon (Filtrasorb-300, Calgon Corp., or equivalent).

6.1.2 A water purification system (Millipore Super-Q or equivalent) may be used to generate reagent water.

6.1.3 Reagent water may also be prepared by boiling water for 15 min. Subsequently, while maintaining the temperature at 90 °C, bubble a contaminant-free inert gas through the water for 1 h. While still hot, transfer the water to a narrow mouth screw-cap bottle and seal with a Teflon-lined septum and cap.

6.2 Sodium thiosulfate—(ACS) Granular.

6.3 Trap Materials:

6.3.1 Coconut charcoal—6/10 mesh sieved to 26 mesh, Barnabey Cheney, CA–580–26 lot # M–2649 or equivalent.

6.3.2 2,6-Diphenylene oxide polymer—Tenax, (60/80 mesh), chromatographic grade or equivalent.

6.3.3 Methyl silicone packing—3% OV–1 on Chromosorb-W (60/80 mesh) or equivalent.

6.3.4 Silica gel—35/60 mesh, Davison, grade-15 or equivalent.

6.4 Methanol—Pesticide quality or equivalent.

6.5 Stock standard solutions—Stock standard solutions may be prepared from pure standard materials or purchased as certified solutions. Prepare stock standard solutions in methanol using assayed liquids or gases as appropriate. Because of the toxicity of some of the organohalides, primary dilutions of these materials should be prepared in a hood. A NIOSH/MESA approved toxic gas respirator should be used when the analyst handles high concentrations of such materials.

6.5.1 Place about 9.8 mL of methanol into a 10-mL ground glass stoppered volumetric flask. Allow the flask to stand, unstoppered, for about 10 min or until all alcohol wetted surfaces have dried. Weigh the flask to the learest 0.1 mg.

6.5.2 Add the assayed reference material:

6.5.2.1 Liquid—Using a 100 µL syringe, immediately add two or more drops of assayed reference material to the flask, then reweigh. Be sure that the drops fall directly into the alcohol without contacting the neck of the flask.

6.5.2.2 Gases—To prepare standards for any of the six halocarbons that boil below 30 °C (bromomethane, chloroethane, chloromethane, dichlorodifluoromethane, trichlorofluoromethane, vinyl chloride), fill a 5-mL valved gas-tight syringe with the reference standard to the 5.0-mL mark. Lower the needle to 5 mm above the methanol meniscus. Slowly introduce the reference standard above the surface of the liquid (the heavy gas will rapidly dissolve into the methanol).

6.5.3 Reweigh, dilute to volume, stopper, then mix by inverting the flask several times. Calculate the concentration in µg/µL from the net gain in weight. When compound purity is assayed to be 96% or greater, the weight can be used without correction to calculate the concentration of the stock standard. Commercially prepared stock standards can be used at any concentration if they are certified by the malufacturer or by an independent source.

6.5.4 Transfer the stock standard solution into a Teflon-sealed screw-cap bottle. Store, with minimal headspace, at −10 to −20 °C and protect from light.

6.5.5 Prepare fresh standards weekly for the six gases and 2-chloroethylvinyl ether. All other standards must be replaced after one month, or sooner if comparison with check standards indicates a problem.

6.6 Secondary dilution standards—Using stock standard solutions, prepare secondary dilution standards in methanol that contain the compounds of interest, either singly or mixed together. The secondary dilution standards should be prepared at concentrations such that the aqueous calibration standards prepared in Section 7.3.1 or 7.4.1 will bracket the working range of the analytical system. Secondary dilution standards should be stored with minimal headspace and should be checked frequently for signs of degradation or evaporation, especially just prior to preparing calibration standards from them.

6.7 Quality control check sample concentrate—See Section 8.2.1.

7. Calibration

7.1 Assemble a purge and trap system that meets the specifications in Section 5.2. Condition the trap overnight at 180 °C by backflushing with an inert gas flow of at least 20 mL/min. Condition the trap for 10 min once daily prior to use.

7.2 Connect the purge and trap system to a gas chromatograph. The gas chromatograph must be operated using temperature and flow rate conditions equivalent to those given in Table 1. Calibrate the purge and trap-gas chromatographic system using either the external standard technique (Section 7.3) or the internal standard technique (Section 7.4).

7.3 External standard calibration procedure:

7.3.1 Prepare calibration standards at a miminum of three concentration levels for each parameter by carefully adding 20.0 µL of one or more secondary dilution standards to 100, 500, or 1000 µL of reagent water. A 25-µL syringe with a 0.006 in. ID needle should be used for this operation. One of the external standards should be at a concentration near, but above, the MDL (Table 1) and the other concentrations should correspond to the expected range of concentrations found in real samples or should define the working range of the detector. These aqueous standards can be stored up to 24 h, if held in sealed vials with zero headspace as described in Section 9.2. If not so stored, they must be discarded after 1 h.

7.3.2 Analyze each calibration standard according to Section 10, and tabulate peak height or area responses versus the concentration in the standard. The results can be used to prepare a calibration curve for each compound. Alternatively, if the ratio of response to concentration (calibration factor) is a constant over the working range (<10% relative standard deviation, RSD), linearity through the origin can be assumed and the average ratio or calibration factor can be used in place of a calibration curve.

7.4 Internal standard calibration procedure—To use this approach, the analyst must select one or more internal standards that are similar in analytical behavior to the compounds of interest. The analyst must further demonstrate that the measurement of the internal standard is not affected by method or matrix interferences. Because of these limitations, no internal standard can be suggested that is applicable to all samples. The compounds recommended for use as surrogate spikes in Section 8.7 have been used successfully as internal standards, because of their generally unique retention times.

7.4.1 Prepare calibration standards at a minimum of three concentration levels for each parameter of interest as described in Section 7.3.1.

7.4.2 Prepare a spiking solution containing each of the internal standards using the procedures described in Sections 6.5 and 6.6. It is recommended that the secondary dilution standard be prepared at a concentration of 15 µg/mL of each internal standard compound. The addition of 10 µL of this standard to 5.0 mL of sample or calibration standard would be equivalent to 30 µg/L.

7.4.3 Analyze each calibration standard according to Section 10, adding 10 µL of internal standard spiking solution directly to the syringe (Section 10.4). Tabulate peak height or area responses against concentration for each compound and internal standard, and calculate response factors (RF) for each compound using Equation 1.

$$RF = \frac{(A_s)(C_{is})}{(A_{is})(C_s)}$$

Equation 1

where:

A_s = Response for the parameter to be measured.
A_{is} = Response for the internal standard.
C_{is} = Concentration of the internal standard.
C_s = Concentration of the parameter to be measured.

If the RF value over the working range is a constant (<10% RSD), the RF can be assumed to be invariant and the average RF can be used for calculations. Alternatively, the results can be used to plot a calibration curve of response ratios, A_s/A_{is}, vs. RF.

7.5 The working calibration curve, calibration factor, or RF must be verified on each working day by the measurement of a QC check sample.

7.5.1 Prepare the QC check sample as described in Section 8.2.2.

7.5.2 Analyze the QC check sample according to Section 10.

7.5.3 For each parameter, compare the response (Q) with the corresponding calibration acceptance criteria found in Table 2. If the responses for all parameters of interest fall within the designated ranges, analysis of actual samples can begin. If any individual Q falls outside the range, proceed according to Section 7.5.4.

NOTE: The large number of parameters in Table 2 present a substantial probability that one or more will not meet the calibration acceptance criteria when all parameters are analyzed.

7.5.4 Repeat the test only for those parameters that failed to meet the calibration acceptance criteria. If the response for a parameter does not fall within the range in this second test, a new calibration curve, calibration factor, or RF must be prepared for that parameter according to Section 7.3 or 7.4.

8. Quality Control

8.1 Each laboratory that uses this method is required to operate a formal quality control program. The minimum requirements of this program consist of an initial demonstration of laboratory capability and an ongoing analysis of spiked samples to evaluate and

document data quality. The laboratory must maintain records to document the quality of data that is generated. Ongoing data quality checks are compared with established performance criteria to determine if the results of analyses meet the performance characteristics of the method. When results of sample spikes indicate atypical method performance, a quality control check standard must be analyzed to confirm that the measurements were performed in an in-control mode of operation.

8.1.1 The analyst must make an initial, one-time, demonstration of the ability to generate acceptable accuracy and precision with this method. This ability is established as described in Section 8.2.

8.1.2 In recognition of advances that are occurring in chromatography, the analyst is permitted certain options (detailed in Section 10.1) to improve the separations or lower the cost of measurements. Each time such a modification is made to the method, the analyst is required to repeat the procedure in Section 8.2.

8.1.3 Each day, the analyst must analyze a reagent water blank to demonstrate that interferences from the analytical system are under control.

8.1.4 The laboratory must, on an ongoing basis, spike and analyze a minimum of 10% of all samples to monitor and evaluate laboratory data quality. This procedure is described in Section 8.3.

8.1.5 The laboratory must, on an ongoing basis, demonstrate through the analyses of quality control check standards that the operation of the measurement system is in control. This procedure is described in Section 8.4. The frequency of the check standard analyses is equivalent to 10% of all samples analyzed but may be reduced if spike recoveries from samples (Section 8.3) meet all specified quality control criteria.

8.1.6 The laboratory must maintain performance records to document the quality of data that is generated. This procedure is described in Section 8.5.

8.2 To establish the ability to generate acceptable accuracy and precision, the analyst must perform the following operations.

8.2.1 A quality control (QC) check sample concentrate is required containing each parameter of interest at a concentration of 10 µg/mL in methanol. The QC check sample concentrate must be obtained from the U.S. Environmental Protection Agency, Environmental Monitoring and Support Laboratory in Cincinnati, Ohio, if available. If not available from that source, the QC check sample concentrate must be obtained from another external source. If not available from either source above, the QC check sample concentrate must be prepared by the laboratory using stock standards prepared independently from those used for calibration.

8.2.2 Prepare a QC check sample to contain 20 µg/L of each parameter by adding 200 µL of QC check sample concentrate to 100 mL of reagent water.

8.2.3 Analyze four 5-mL aliquots of the well-mixed QC check sample according to Section 10.

8.2.4 Calculate the average recovery ($\bar{X}$) in µg/L, and the standard deviation of the recovery (s) in µg/L, for each parameter of interest using the four results.

8.2.5 For each parameter compare s and $\bar{X}$ with the corresponding acceptance criteria for precision and accuracy, respectively, found in Table 2. If s and $\bar{X}$ for all parameters of interest meet the acceptance criteria, the system performance is acceptable and analysis of actual samples can begin. If any individual s exceeds the precision limit or any individual $\bar{X}$ falls outside the range for accuracy, then the system performance is unacceptable for that parameter.

NOTE: The large number of parameters in Table 2 present a substantial probability that one or more will fail at least one of the acceptance criteria when all parameters are analyzed.

8.2.6 When one or more of the parameters tested fail at least one of the acceptance criteria, the analyst must proceed according to Section 8.2.6.1 or 8.2.6.2.

8.2.6.1 Locate and correct the source of the problem and repeat the test for all parameters of interest beginning with Section 8.2.3.

8.2.6.2 Beginning with Section 8.2.3, repeat the test only for those parameters that failed to meet criteria. Repeated failure, however, will confirm a general problem with the measurement system. If this occurs, locate and correct the source of the problem and repeat the test for all compounds of interest beginning with Section 8.2.3.

8.3 The laboratory must, on an ongoing basis, spike at least 10% of the samples from each sample site being monitored to assess accuracy. For laboratories analyzing one to ten samples per month, at least one spiked sample per month is required.

8.3.1 The concentration of the spike in the sample should be determined as follows:

8.3.1.1 If, as in compliance monitoring, the concentration of a specific parameter in the sample is being checked against a regulatory concentration limit, the spike should be at that limit or 1 to 5 times higher than the background concentration determined in Section 8.3.2, whichever concentration would be larger.

8.3.1.2 If the concentration of a specific parameter in the sample is not being checked against a limit specific to that parameter, the spike should be at 20 µg/L or 1 to 5 times higher than the background concentration determined in Section 8.3.2, whichever concentration would be larger.

8.3.2 Analyze one 5-mL sample aliquot to determine the background concentration (B) of each parameter. If necessary, prepare a new QC check sample concentrate (Section 8.2.1) appropriate for the background concentrations in the sample. Spike a second 5-mL sample aliquot with 10 µL of the QC check sample concentrate and analyze it to determine the concentration after spiking (A) of each parameter. Calculate each percent recovery (P) as 100(A − B)%/T, where T is the known true value of the spike.

8.3.3 Compare the percent recovery (P) for each parameter with the corresponding QC acceptance criteria found in Table 2. These acceptance criteria were calculated to include an allowance for error in measurement of both the background and spike concentrations, assuming a spike to background ratio of 5:1. This error will be accounted for to the extent that the analyst's spike to background ratio approaches 5:1.[7] If spiking was performed at a concentration lower than 20 µg/L, the analyst must use either the QC acceptance criteria in Table 2, or optional QC acceptance criteria calculated for the specific spike concentration. To calculate optional acceptance criteria for the recovery of a parameter: (1) Calculate accuracy (X′) using the equation in Table 3, substituting the spike concentration (T) for C; (2) calculate overall precision (S′) using the equation in Table 3, substituting X′ for $\bar{X}$; (3) calculate the range for recovery at the spike concentration as (100 X′/T)±2.44(100 S′/T)%.[7]

8.3.4 If any individual P falls outside the designated range for recovery, that parameter has failed the acceptance criteria. A check standard containing each parameter that failed the criteria must be analyzed as described in Section 8.4.

8.4 If any parameter fails the acceptance criteria for recovery in Section 8.3, a QC check standard containing each parameter that failed must be prepared and analyzed.

NOTE: The frequency for the required analysis of a QC check standard will depend upon the number of parameters being simultaneously tested, the complexity of the sample matrix, and the performance of the laboratory. If the entire list of parameters in Table 2 must be measured in the sample in Section 8.3, the probability that the analysis of a QC check standard will be required is high. In this case the QC check standard should be routinely analyzed with the spiked sample.

8.4.1 Prepare the QC check standard by adding 10 µL of QC check sample concentrate (Section 8.2.1 or 8.3.2) to 5 mL of reagent water. The QC check standard needs only to contain the parameters that failed criteria in the test in Section 8.3.

8.4.2 Analyze the QC check standard to determine the concentration measured (A) of each parameter. Calculate each percent recovery (P_s) as 100 (A/T)%, where T is the true value of the standard concentration.

8.4.3 Compare the percent recovery (P_s) for each parameter with the corresponding QC acceptance criteria found in Table 2. Only parameters that failed the test in Section 8.3 need to be compared with these criteria. If the recovery of any such parameter falls outside the designated range, the laboratory performance for that parameter is judged to be out of control, and the problem must be immediately identified and corrected. The analytical result for that parameter in the unspiked sample is suspect and may not be reported for regulatory compliance purposes.

8.5 As part of the QC program for the laboratory, method accuracy for wastewater samples must be assessed and records must be maintained. After the analysis of five spiked wastewater samples as in Section 8.3, calculate the average percent recovery ($\bar{P}$) and the standard deviation of the percent recovery (s_p). Express the accuracy assessment as a percent recovery interval from $\bar{P} - 2s_p$ to $\bar{P} + 2s_p$. If $\bar{p}$ = 90% and s_p = 10%, for example, the accuracy interval is expressed as 70–110%. Update the accuracy assessment for each parameter on a regular basis (e.g. after each five to ten new accuracy measurements).

8.6 It is recommended that the laboratory adopt additional quality assurance practices for use with this method. The specific practices that are most productive depend upon the needs of the laboratory and the nature of the samples. Field duplicates may be analyzed to assess the precision of the environmental measurements. When doubt exists over the identification of a peak on the chromatogram, confirmatory techniques such as gas chromatography with a dissimilar column, specific element detector, or mass spectrometer must be used. Whenever possible, the laboratory should analyze standard reference materials and participate in relevant performance evaluation studies.

8.7 The analyst should monitor both the performance of the analytical system and the effectiveness of the method in dealing with each sample matrix by spiking each sample, standard, and reagent water blank with surrogate halocarbons. A combination of bromochloromethane, 2-bromo-1-chloropropane, and 1,4-dichlorobutane is recommended to encompass the range of the temperature program used in this method. From stock standard solutions prepared as in Section 6.5, add a volume to give 750 µg of each surrogate to 45 mL of reagent water contained in a 50-mL volumetric flask, mix and dilute to volume for a concentration of 15 ng/µL. Add 10 µL of this surrogate spiking solution directly into the 5-mL syringe with every sample and reference standard analyzed. Prepare a fresh surrogate spiking solution on a weekly basis. If the internal standard calibration procedure is being used, the surrogate compounds may be added directly

to the internal standard spiking solution (Section 7.4.2).

9. Sample Collection, Preservation, and Handling

9.1 All samples must be iced or refrigerated from the time of collection until analysis. If the sample contains free or combined chlorine, add sodium thiosulfate preservative (10 mg/40 mL is sufficient for up to 5 ppm Cl_2) to the empty sample bottle just prior to shipping to the sampling site. EPA Methods 330.4 and 330.5 may be used for measurement of residual chlorine.[8] Field test kits are available for this purpose.

9.2 Grab samples must be collected in glass containers having a total volume of at least 25 mL. Fill the sample bottle just to overflowing in such a manner that no air bubbles pass through the sample as the bottle is being filled. Seal the bottle so that no air bubbles are entrapped in it. If preservative has been added, shake vigorously for 1 min. Maintain the hermetic seal on the sample bottle until time of analysis.

9.3 All samples must be analyzed within 14 days of collection.[3]

10. Procedure

10.1 Table 1 summarizes the recommended operating conditions for the gas chromatograph. Included in this table are estimated retention times and MDL that can be achieved under these conditions. An example of the separations achieved by Column 1 is shown in Figure 5. Other packed columns, chromatographic conditions, or detectors may be used if the requirements of Section 8.2 are met.

10.2 Calibrate the system daily as described in Section 7.

10.3 Adjust the purge gas (nitrogen or helium) flow rate to 40 mL/min. Attach the trap inlet to the purging device, and set the purge and trap system to purge (Figure 3). Open the syringe valve located on the purging device sample introduction needle.

10.4 Allow the sample to come to ambient temperature prior to introducing it to the syringe. Remove the plunger from a 5-mL syringe and attach a closed syringe valve. Open the sample bottle (or standard) and carefully pour the sample into the syringe barrel to just short of overflowing. Replace the syringe plunger and compress the sample. Open the syringe valve and vent any residual air while adjusting the sample volume to 5.0 mL. Since this process of taking an aliquot destroys the validity of the sample for future analysis, the analyst should fill a second syringe at this time to protect against possible loss of data. Add 10.0 μL of the surrogate spiking solution (Section 8.7) and 10.0 μL of the internal standard spiking solution (Section 7.4.2), if applicable, through the valve bore, then close the valve.

10.5 Attach the syringe-syringe valve assembly to the syringe valve on the purging device. Open the syringe valves and inject the sample into the purging chamber.

10.6 Close both valves and purge the sample for 11.0 ±0.1 min at ambient temperature.

10.7 After the 11-min purge time, attach the trap to the chromatograph, adjust the purge and trap system to the desorb mode (Figure 4), and begin to temperature program the gas chromatograph. Introduce the trapped materials to the GC column by rapidly heating the trap to 180 °C while backflushing the trap with an inert gas between 20 and 60 mL/min for 4 min. If rapid heating of the trap cannot be achieved, the GC column must be used as a secondary trap by cooling it to 30 °C (subambient temperature, if poor peak geometry or random retention time problems persist) instead of the initial program temperature of 45 °C

10.8 While the trap is being desorbed into the gas chromatograph, empty the purging chamber using the sample introduction syringe. Wash the chamber with two 5-mL flushes of reagent water.

10.9 After desorbing the sample for 4 min, recondition the trap by returning the purge and trap system to the purge mode. Wait 15 s then close the syringe valve on the purging device to begin gas flow through the trap. The trap temperature should be maintained at 180 °C After approximately 7 min, turn off the trap heater and open the syringe valve to stop the gas flow through the trap. When the trap is cool, the next sample can be analyzed.

10.10 Identify the parameters in the sample by comparing the retention times of the peaks in the sample chromatogram with those of the peaks in standard chromatograms. The width of the retention time window used to make identifications should be based upon measurements of actual retention time variations of standards over the course of a day. Three times the standard deviation of a retention time for a compound can be used to calculate a suggested window size; however, the experience of the analyst should weigh heavily in the interpretation of chromatograms.

10.11 If the response for a peak exceeds the working range of the system, prepare a dilution of the sample with reagent water from the aliquot in the second syringe and reanalyze.

11. Calculations

11.1 Determine the concentration of individual compounds in the sample.

11.1.1 If the external standard calibration procedure is used, calculate the concentration of the parameter being measured from the peak response using the calibration curve or calibration factor determined in Section 7.3.2.

11.1.2 If the internal standard calibration procedure is used, calculate the concentration in the sample using the response factor (RF) determined in Section 7.4.3 and Equation 2.

Equation 2

$$\text{Concentration } (\mu g/L) = \frac{(A_s)(C_{is})}{(A_{is})(RF)}$$

where:

A_s = Response for the parameter to be measured.

A_{is} = Response for the internal standard.

C_{is} = Concentration of the internal standard.

11.2 Report results in µg/L without correction for recovery data. All QC data obtained should be reported with the sample results.

12. Method Performance

12.1 The method detection limit (MDL) is defined as the minimum concentration of a substance that can be measured and reported with 99% confidence that the value is above zero.[1] The MDL concentration listed in Table 1 were obtained using reagent water.[11]. Similar results were achieved using representative wastewaters. The MDL actually achieved in a given analysis will vary depending on instrument sensitivity and matrix effects.

12.2 This method is recommended for use in the concentration range from the MDL to 1000 × MDL. Direct aqueous injection techniques should be used to measure concentration levels above 1000 × MDL.

12.3 This method was tested by 20 laboratories using reagent water, drinking water, surface water, and three industrial wastewaters spiked at six concentrations over the range 8.0 to 500 µg/L.[9] Single operator precision, overall precision, and method accuracy were found to be directly related to the concentration of the parameter and essentially independent of the sample matrix. Linear equations to describe these relationships are presented in Table 3.

References

1. 40 CFR part 136, appendix B.

2. Bellar, T.A., and Lichtenberg, J.J. ''Determining Volatile Organics at Microgram-per-Litre-Levels by Gas Chromatography,'' *Journal of the American Water Works Association, 66,* 739 (1974).

3. Bellar, T.A., and Lichtenberg, J.J. ''Semi-Automated Headspace Analysis of Drinking Waters and Industrial Waters for Purgeable Volatile Organic Compounds,'' Proceedings from Symposium on Measurement of Organic Pollutants in Water and Wastewater, American Society for Testing and Materials, STP 686, C.E. Van Hall, editor, 1978.

4. ''Carcinogens—Working With Carcinogens,'' Department of Health, Education, and Welfare, Public Health Service, Center for Disease Control, National Institute for Occupational Safety and Health, Publication No. 77–206, August 1977.

5. ''OSHA Safety and Health Standards, General Industry'' (29 CFR part 1910), Occupational Safety and Health Administration, OSHA 2206 (Revised, January 1976).

6. ''Safety in Academic Chemistry Laboratories,'' American Chemical Society Publication, Committee on Chemical Safety, 3rd Edition, 1979.

7. Provost, L.P., and Elder, R.S. ''Interpretation of Percent Recovery Data,'' *American Laboratory, 15,* 58–63 (1983). (The value 2.44 used in the equation in Section 8.3.3 is two times the value 1.22 derived in this report.)

8. ''Methods 330.4 (Titrimetric, DPD-FAS) and 330.5 (Spectrophotometric, DPD) for Chlorine, Total Residual,'' Methods for Chemical Analysis of Water and Wastes, EPA 600/4–79–020, U.S. Environmental Protection Agency, Environmental Monitoring and Support Laboratory, Cincinnati, Ohio 45268, March 1979.

9. ''EPA Method Study 24, Method 601—Purgeable Halocarbons by the Purge and Trap Method,'' EPA 600/4–84–064, National Technical Information Service, PB84–212448, Springfield, Virginia 22161, July 1984.

10. ''Method Validation Data for EPA Method 601,'' Memorandum from B. Potter, U.S. Environmental Protection Agency, Environmental Monitoring and Support Laboratory, Cincinnati, Ohio 45268, November 10, 1983.

11. Bellar, T. A., Unpublished data, U.S. Environmental Protection Agency, Environmental Monitoring and Support Laboratory, Cincinnati, Ohio 45268, 1981.

TABLE 1—CHROMATOGRAPHIC CONDITIONS AND METHOD DETECTION LIMITS

Parameter	Retention time (min)		Method detection limit (µg/L)
	Column 1	Column 2	
Chloromethane	1.50	5.28	0.08
Bromomethane	2.17	7.05	1.18
Dichlorodifluoromethane	2.62	nd	1.81
Vinyl chloride	2.67	5.28	0.18
Chloroethane	3.33	8.68	0.52
Methylene chloride	5.25	10.1	0.25
Trichlorofluoromethane	7.18	nd	nd

TABLE 1—CHROMATOGRAPHIC CONDITIONS AND METHOD DETECTION LIMITS—Continued

Parameter	Retention time (min)		Method detection limit (μg/L)
	Column 1	Column 2	
1,1-Dichloroethene	7.93	7.72	0.13
1,1-Dichloroethane	9.30	12.6	0.07
trans-1,2-Dichloroethene	10.1	9.38	0.10
Chloroform	10.7	12.1	0.05
1,2-Dichloroethane	11.4	15.4	0.03
1,1,1-Trichloroethane	12.6	13.1	0.03
Carbon tetrachloride	13.0	14.4	0.12
Bromodichloromethane	13.7	14.6	0.10
1,2-Dichloropropane	14.9	16.6	0.04
cis-1,3-Dichloropropene	15.2	16.6	0.34
Trichloroethene	15.8	13.1	0.12
Dibromochloromethane	16.5	16.6	0.09
1,1,2-Trichloroethane	16.5	18.1	0.02
trans-1,3-Dichloropropene	16.5	18.0	0.20
2-Chloroethylvinyl ether	18.0	nd	0.13
Bromoform	19.2	19.2	0.20
1,1,2,2-Tetrachloroethane	21.6	nd	0.03
Tetrachloroethene	21.7	15.0	0.03
Chlorobenzene	24.2	18.8	0.25
1,3-Dichlorobenzene	34.0	22.4	0.32
1,2-Dichlorobenzene	34.9	23.5	0.15
1,4-Dichlorobenzene	35.4	22.3	0.24

Column 1 conditions: Carbopack B (60/80 mesh) coated with 1% SP–1000 packed in an 8 ft × 0.1 in. ID stainless steel or glass column with helium carrier gas at 40 mL/min flow rate. Column temperature held at 45 °C for 3 min then programmed at 8 °C/min to 220 °C and held for 15 min.

Column 2 conditions: Porisil-C (100/120 mesh) coated with n-octane packed in a 6 ft × 0.1 in. ID stainless steel or glass column with helium carrier gas at 40 mL/min flow rate. Column temperature held at 50 °C for 3 min then programmed at 6 °C/min to 170 °C and held for 4 min.

nd = not determined.

TABLE 2—CALIBRATION AND QC ACCEPTANCE CRITERIA—METHOD 601 [A]

Parameter	Range for Q (μg/L)	Limit for s (μg/L)	Range for $\bar{X}$ (μg/L)	Range P, P_s (%)
Bromodichloromethane	15.2–24.8	4.3	10.7–32.0	42–172
Bromoform	14.7–25.3	4.7	5.0–29.3	13–159
Bromomethane	11.7–28.3	7.6	3.4–24.5	D–144
Carbon tetrachloride	13.7–26.3	5.6	11.8–25.3	43–143
Chlorobenzene	14.4–25.6	5.0	10.2–27.4	38–150
Chloroethane	15.4–24.6	4.4	11.3–25.2	46–137
2-Chloroethylvinyl ether	12.0–28.0	8.3	4.5–35.5	14–186
Chloroform	15.0–25.0	4.5	12.4–24.0	49–133
Chloromethane	11.9–28.1	7.4	D–34.9	D–193
Dibromochloromethane	13.1–26.9	6.3	7.9–35.1	24–191
1,2-Dichlorobenzene	14.0–26.0	5.5	1.7–38.9	D–208
1,3-Dichlorobenzene	9.9–30.1	9.1	6.2–32.6	7–187
1,4-Dichlorobenzene	13.9–26.1	5.5	11.5–25.5	42–143
1,1-Dichloroethane	16.8–23.2	3.2	11.2–24.6	47–132
1,2-Dichloroethane	14.3–25.7	5.2	13.0–26.5	51–147
1,1-Dichloroethene	12.6–27.4	6.6	10.2–27.3	28–167
trans-1,2-Dichloroethene	12.8–27.2	6.4	11.4–27.1	38–155
1,2-Dichloropropane	14.8–25.2	5.2	10.1–29.9	44–156
cis-1,3-Dichloropropene	12.8–27.2	7.3	6.2–33.8	22–178
trans-1,3-Dichloropropene	12.8–27.2	7.3	6.2–33.8	22–178
Methylene chloride	15.5–24.5	4.0	7.0–27.6	25–162
1,1,2,2-Tetrachloroethane	9.8–30.2	9.2	6.6–31.8	8–184
Tetrachloroethene	14.0–26.0	5.4	8.1–29.6	26–162
1,1,1-Trichloroethane	14.2–25.8	4.9	10.8–24.8	41–138
1,1,2-Trichloroethane	15.7–24.3	3.9	9.6–25.4	39–136
Trichloroethene	15.4–24.6	4.2	9.2–26.6	35–146
Trichlorofluoromethane	13.3–26.7	6.0	7.4–28.1	21–156
Vinyl chloride	13.7–26.3	5.7	8.2–29.9	28–163

[a] Criteria were calculated assuming a QC check sample concentration of 20 μg/L.

Q = Concentration measured in QC check sample, in μg/L (Section 7.5.3).

s = Standard deviation of four recovery measurements, in μg/L (Section 8.2.4).

$\bar{X}$ = Average recovery for four recovery measurements, in μg/L (Section 8.2.4).

P, P_s = Percent recovery measured (Section 8.3.2, Section 8.4.2).

D = Detected; result must be greater than zero.

NOTE: These criteria are based directly upon the method performance data in Table 3. Where necessary, the limits for recovery have been broadened to assure applicability of the limits to concentrations below those used to develop Table 3.

TABLE 3—METHOD ACCURACY AND PRECISION AS FUNCTIONS OF CONCENTRATION—METHOD 601

Parameter	Accuracy, as recovery, $\bar{X}'$ (μg/L)	Single analyst precision, s_r' (μg/L)	Overall precision, S' (μg/L)
Bromodichloromethane	$1.12C - 1.02$	$0.11\bar{X} + 0.04$	$0.20\bar{X} + 1.00$
Bromoform	$0.96C - 2.05$	$0.12\bar{X} + 0.58$	$0.21\bar{X} + 2.41$
Bromomethane	$0.76C - 1.27$	$0.28\bar{X} + 0.27$	$0.36\bar{X} + 0.94$
Carbon tetrachloride	$0.98C - 1.04$	$0.15\bar{X} + 0.38$	$0.20\bar{X} + 0.39$
Chlorobenzene	$1.00C - 1.23$	$0.15\bar{X} - 0.02$	$0.18\bar{X} + 1.21$
Choroethane	$0.99C - 1.53$	$0.14\bar{X} - 0.13$	$0.17\bar{X} + 0.63$
2-Chloroethylvinyl ether[a]	1.00C	$0.20\bar{X}$	$0.35\bar{X}$
Chloroform	$0.93C - 0.39$	$0.13\bar{X} + 0.15$	$0.19\bar{X} - 0.02$
Chloromethane	$0.77C + 0.18$	$0.28\bar{X} - 0.31$	$0.52\bar{X} + 1.31$
Dibromochloromethane	$0.94C + 2.72$	$0.11\bar{X} + 1.10$	$0.24\bar{X} + 1.68$
1,2-Dichlorobenzene	$0.93C + 1.70$	$0.20\bar{X} + 0.97$	$0.13\bar{X} + 6.13$
1,3-Dichlorobenzene	$0.95C + 0.43$	$0.14\bar{X} + 2.33$	$0.26\bar{X} + 2.34$
1,4-Dichlorobenzene	$0.93C - 0.09$	$0.15\bar{X} + 0.29$	$0.20\bar{X} + 0.41$
1,1-Dichloroethane	$0.95C - 1.08$	$0.09\bar{X} + 0.17$	$0.14\bar{X} + 0.94$
1,2-Dichloroethane	$1.04C - 1.06$	$0.11\bar{X} + 0.70$	$0.15\bar{X} + 0.94$
1,1-Dichloroethene	$0.98C - 0.87$	$0.21\bar{X} - 0.23$	$0.29\bar{X} - 0.40$
trans-1,2-Dichloroethene	$0.97C - 0.16$	$0.11\bar{X} + 1.46$	$0.17\bar{X} + 1.46$
1,2-Dichloropropane[a]	1.00C	$0.13\bar{X}$	$0.23\bar{X}$
cis-1,3-Dichloropropene[a]	1.00C	$0.18\bar{X}$	$0.32\bar{X}$
trans-1,3-Dichloropropene[a]	1.00C	$0.18\bar{X}$	$0.32\bar{X}$
Methylene chloride	$0.91C - 0.93$	$0.11\bar{X} + 0.33$	$0.21\bar{X} + 1.43$
1,1,2,2-Tetrachloroethene	$0.95C + 0.19$	$0.14\bar{X} + 2.41$	$0.23\bar{X} + 2.79$
Tetrachloroethene	$0.94C + 0.06$	$0.14\bar{X} + 0.38$	$0.18\bar{X} + 2.21$
1,1,1-Trichloroethane	$0.90C - 0.16$	$0.15\bar{X} + 0.04$	$0.20\bar{X} + 0.37$
1,1,2-Trichloroethane	$0.86C + 0.30$	$0.13\bar{X} - 0.14$	$0.19\bar{X} + 0.67$
Trichloroethene	$0.87C + 0.48$	$0.13\bar{X} - 0.03$	$0.23\bar{X} + 0.30$
Trichlorofluoromethane	$0.89C - 0.07$	$0.15\bar{X} + 0.67$	$0.26\bar{X} + 0.91$
Vinyl chloride	$0.97C - 0.36$	$0.13\bar{X} + 0.65$	$0.27\bar{X} + 0.40$

$\bar{X}'$ = Expected recovery for one or more measurements of a sample containing a concentration of C, in μg/L.
s_r' = Expected single analyst standard deviation of measurements at an average concentration found of $\bar{X}$, in μg/L.
S^1 = Expected interlaboratory standard deviation of measurements at an average concentration found of $\bar{X}$, in μg/L.
C = True value for the concentration, in μg/L.
$\bar{X}$ = Average recovery found for measurements of samples containing a concentration of C, in μg/L.
[a] Estimates based upon the performance in a single laboratory.[10]

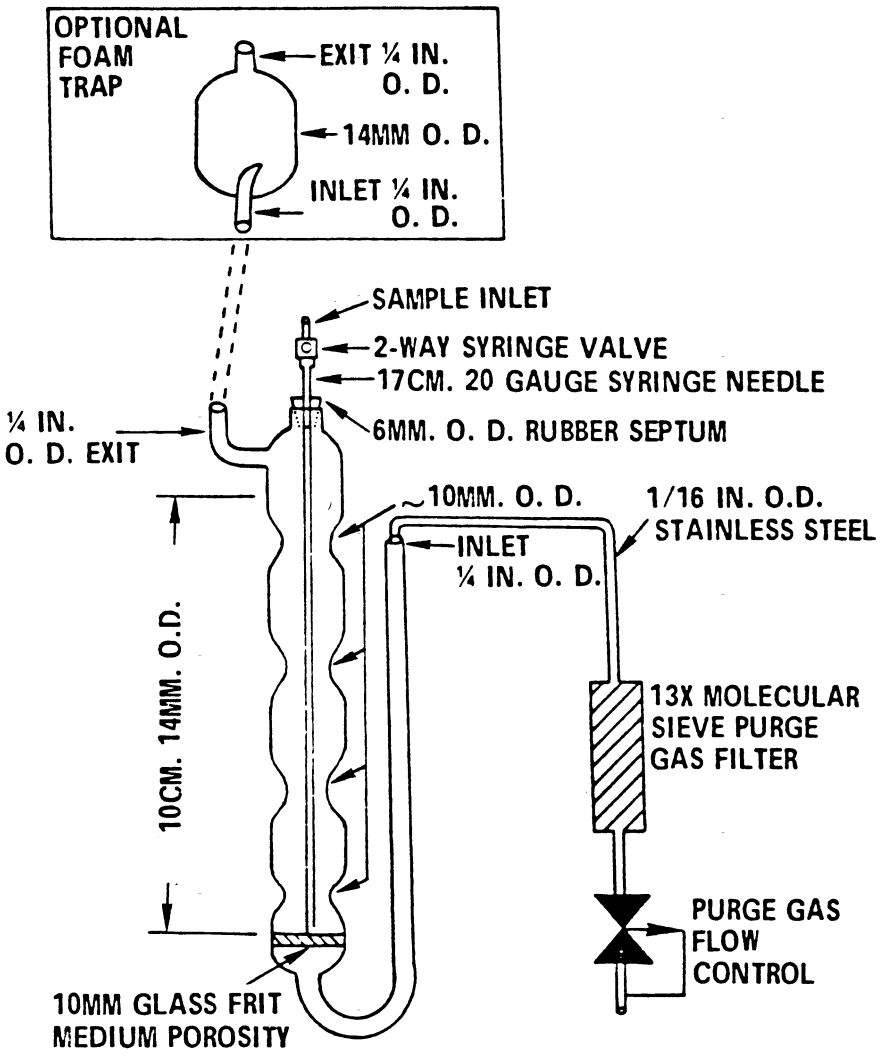

Figure 1. Purging device.

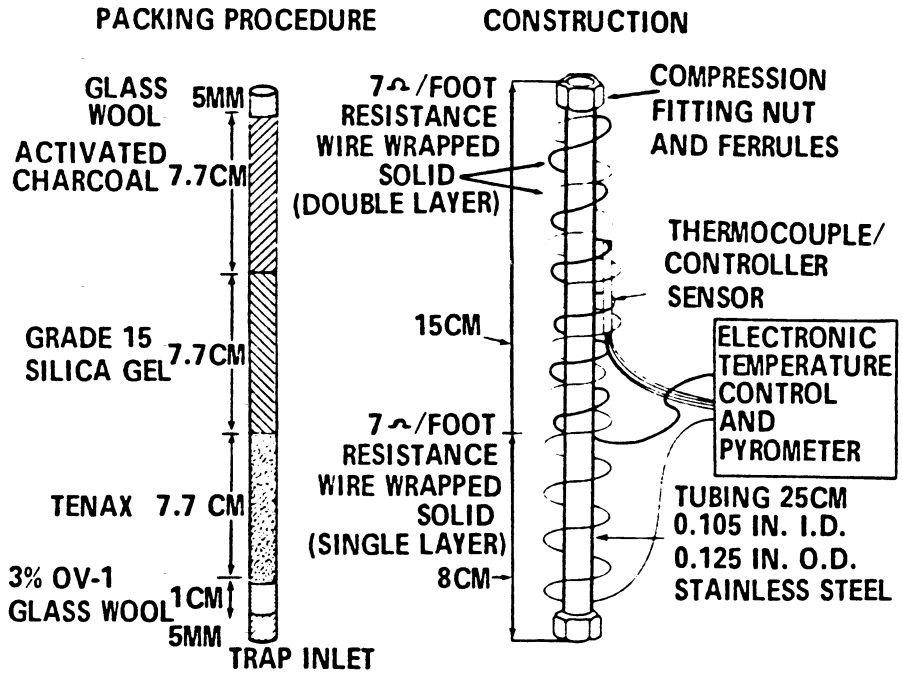

Figure 2. Trap packings and construction to include desorb capability

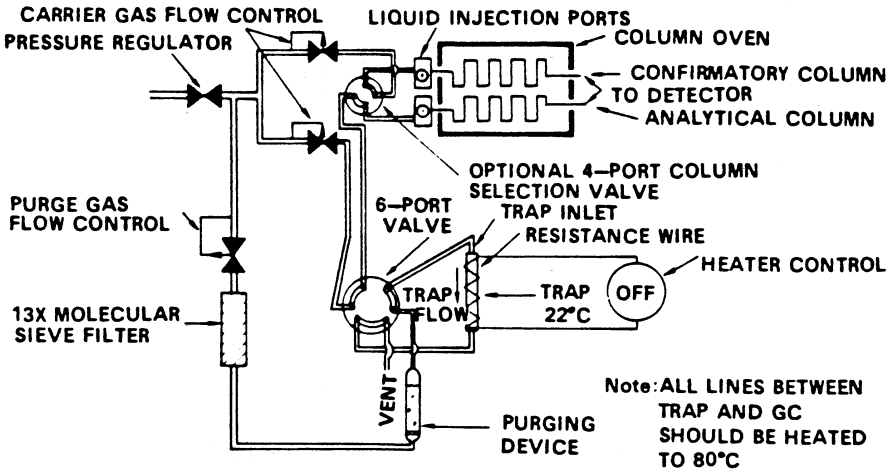

Figure 3. Purge and trap system-purge mode.

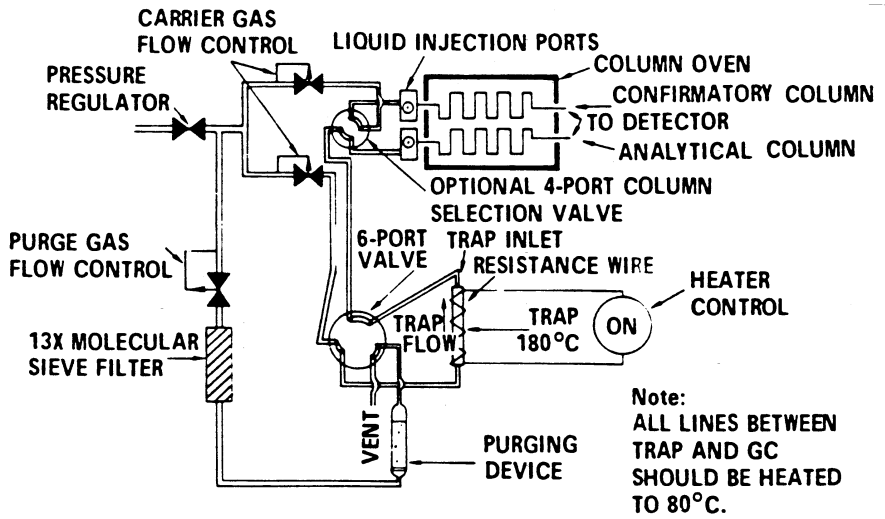

Figure 4. Purge and trap system - desorb mode.

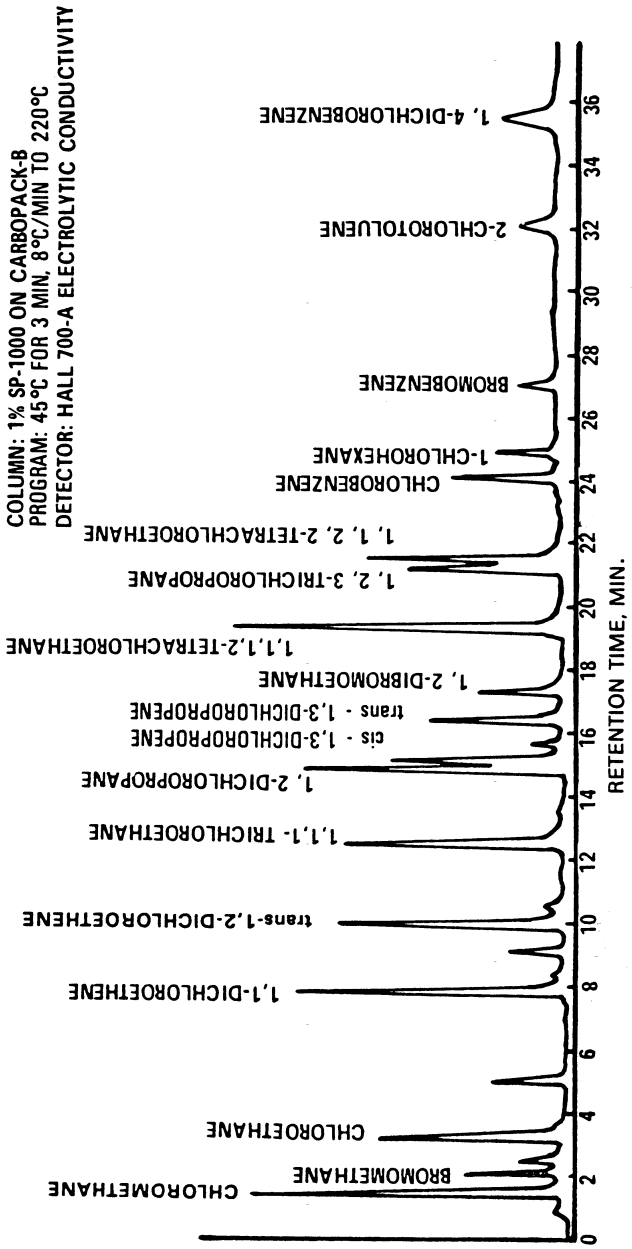

Figure 5. Gas chromatogram of purgeable halocarbons.

METHOD 602—PURGEABLE AROMATICS

1. Scope and Application

1.1 This method covers the determination of various purgeable aromatics. The following parameters may be determined by this method:

Parameter	STORET No.	CAS No.
Benzene	34030	71–43–2
Chlorobenzene	34301	108–90–7
1,2-Dichlorobenzene	34536	95–50–1
1,3-Dichlorobenzene	34566	541–73–1
1,4-Dichlorobenzene	34571	106–46–7
Ethylbenzene	34371	100–41–4
Toluene	34010	108–88–3

1.2 This is a purge and trap gas chromatographic (GC) method applicable to the determination of the compounds listed above in municipal and industrial discharges as provided under 40 CFR 136.1. When this method is used to analyze unfamiliar samples for any or all of the compounds above, compound identifications should be supported by at least one additional qualitative technique. This method describes analytical conditions for a second gas chromatographic column that can be used to confirm measurements made with the primary column. Method 624 provides gas chromatograph/mass spectrometer (GC/MS) conditions appropriate for the qualitative and quantitative confirmation of results for all of the parameters listed above.

1.3 The method detection limit (MDL, defined in Section 12.1)[1] for each parameter is listed in Table 1. The MDL for a specific wastewater may differ from those listed, depending upon the nature of interferences in the sample matrix.

1.4 Any modification of this method, beyond those expressly permitted, shall be considered as a major modification subject to application and approval of alternate test procedures under 40 CFR 136.4 and 136.5.

1.5 This method is restricted to use by or under the supervision of analysts experienced in the operation of a purge and trap system and a gas chromatograph and in the interpretation of gas chromatograms. Each analyst must demonstrate the ability to generate acceptable results with this method using the procedure described in Section 8.2.

2. Summary of Method

2.1 An inert gas is bubbled through a 5-mL water sample contained in a specially-designed purging chamber at ambient temperature. The aromatics are efficiently transferred from the aqueous phase to the vapor phase. The vapor is swept through a sorbent trap where the aromatics are trapped. After purging is completed, the trap is heated and backflushed with the inert gas to desorb the aromatics onto a gas chromatographic column. The gas chromatograph is temperature programmed to separate the aromatics which are then detected with a photoionization detector.[2 3]

2.2 The method provides an optional gas chromatographic column that may be helpful in resolving the compounds of interest from interferences that may occur.

3. Interferences

3.1 Impurities in the purge gas and organic compounds outgassing from the plumbing ahead of the trap account for the majority of contamination problems. The analytical system must be demonstrated to be free from contamination under the conditions of the analysis by running laboratory reagent blanks as described in Section 8.1.3. The use of non-Teflon plastic tubing, non-Teflon thread sealants, or flow controllers with rubber components in the purge and trap system should be avoided.

3.2 Samples can be contaminated by diffusion of volatile organics through the septum seal into the sample during shipment and storage. A field reagent blank prepared from reagent water and carried through the sampling and handling protocol can serve as a check on such contamination.

3.3 Contamination by carry-over can occur whenever high level and low level samples are sequentially analyzed. To reduce carry-over, the purging device and sample syringe must be rinsed with reagent water between sample analyses. Whenever an unusually concentrated sample is encountered, it should be followed by an analysis of reagent water to check for cross contamination. For samples containing large amounts of water-soluble materials, suspended solids, high boiling compounds or high aromatic levels, it may be necessary to wash the purging device with a detergent solution, rinse it with distilled water, and then dry it in an oven at 105 °C between analyses. The trap and other parts of the system are also subject to contamination; therefore, frequent bakeout and purging of the entire system may be required.

4. Safety

4.1 The toxicity or carcinogenicity of each reagent used in this method has not been precisely defined; however, each chemical compound should be treated as a potential health hazard. From this viewpoint, exposure to these chemicals must be reduced to the lowest possible level by whatever means available. The laboratory is responsible for maintaining a current awareness file of OSHA regulations regarding the safe handling of the chemicals specified in this method. A reference file of material data handling sheets should also be made available to all personnel involved in the chemical analysis. Additional references to laboratory safety

are available and have been identified[4 6] for the information of the analyst.

4.2 The following parameters covered by this method have been tentatively classified as known or suspected, human or mammalian carcinogens: benzene and 1,4-dichlorobenzene. Primary standards of these toxic compounds should be prepared in a hood. A NIOSH/MESA approved toxic gas respirator should be worn when the analyst handles high concentrations of these toxic compounds.

5. Apparatus and Materials

5.1 Sampling equipment, for discrete sampling.

5.1.1 Vial]25-mL capacity or larger, equipped with a screw cap with a hole in the center (Pierce #13075 or equivalent). Detergent wash, rinse with tap and distilled water, and dry at 105 °C before use.

5.1.2 Septum—Teflon-faced silicone (Pierce #12722 or equivalent). Detergent wash, rinse with tap and distilled water, and dry at 105 °C for 1 h before use.

5.2 Purge and trap system—The purge and trap system consists of three separate pieces of equipment: A purging device, trap, and desorber. Several complete systems are now commercially available.

5.2.1 The purging device must be designed to accept 5-mL samples with a water column at least 3 cm deep. The gaseous head space between the water column and the trap must have a total volume of less than 15 mL. The purge gas must pass through the water column as finely divided bubbles with a diameter of less than 3 mm at the origin. The purge gas must be introduced no more than 5 mm from the base of the water column. The purging device illustrated in Figure 1 meets these design criteria.

5.2.2 The trap must be at least 25 cm long and have an inside diameter of at least 0.105 in.

5.2.2.1 The trap is packed with 1 cm of methyl silicone coated packing (Section 6.4.2) and 23 cm of 2,6-diphenylene oxide polymer (Section 6.4.1) as shown in Figure 2. This trap was used to develop the method performance statements in Section 12.

5.2.2.2 Alternatively, either of the two traps described in Method 601 may be used, although water vapor will preclude the measurement of low concentrations of benzene.

5.2.3 The desorber must be capable of rapidly heating the trap to 180 °C. The polymer section of the trap should not be heated higher than 180 °C and the remaining sections should not exceed 200 °C. The desorber illustrated in Figure 2 meets these design criteria.

5.2.4 The purge and trap system may be assembled as a separate unit or be coupled to a gas chromatograph as illustrated in Figures 3, 4, and 5.

5.3 Gas chromatograph—An analytical system complete with a temperature programmable gas chromatograph suitable for on-column injection and all required accessories including syringes, analytical columns, gases, detector, and strip-chart recorder. A data system is recommended for measuring peak areas.

5.3.1 Column 1—6 ft long × 0.082 in. ID stainless steel or glass, packed with 5% SP–1200 and 1.75% Bentone-34 on Supelcoport (100/120 mesh) or equivalent. This column was used to develop the method performance statements in Section 12. Guidelines for the use of alternate column packings are provided in Section 10.1.

5.3.2 Column 2—8 ft long × 0.1 in ID stainless steel or glass, packed with 5% 1,2,3-Tris(2-cyanoethoxy)propane on Chromosorb W-AW (60/80 mesh) or equivalent.

5.3.3 Detector—Photoionization detector (h-Nu Systems, Inc. Model PI–51–02 or equivalent). This type of detector has been proven effective in the analysis of wastewaters for the parameters listed in the scope (Section 1.1), and was used to develop the method performance statements in Section 12. Guidelines for the use of alternate detectors are provided in Section 10.1.

5.4 Syringes—5-mL glass hypodermic with Luerlok tip (two each), if applicable to the purging device.

5.5 Micro syringes—25-µL, 0.006 in. ID needle.

5.6 Syringe valve—2-way, with Luer ends (three each).

5.7 Bottle—15-mL, screw-cap, with Teflon cap liner.

5.8 Balance—Analytical, capable of accurately weighing 0.0001 g.

6. Reagents

6.1 Reagent water—Reagent water is defined as a water in which an interferent is not observed at the MDL of the parameters of interest.

6.1.1 Reagent water can be generated by passing tap water through a carbon filter bed containing about 1 lb of activated carbon (Filtrasorb-300, Calgon Corp., or equivalent).

6.1.2 A water purification system (Millipore Super-Q or equivalent) may be used to generate reagent water.

6.1.3 Reagent water may also be prepared by boiling water for 15 min. Subsequently, while maintaining the temperature at 90 °C, bubble a contaminant-free inert gas through the water for 1 h. While still hot, transfer the water to a narrow mouth screw-cap bottle and seal with a Teflon-lined septum and cap.

6.2 Sodium thiosulfate—(ACS) Granular.

6.3 Hydrochloric acid (1 + 1)—Add 50 mL of concentrated HCl (ACS) to 50 mL of reagent water.

6.4 Trap Materials:

6.4.1 2,6-Diphenylene oxide polymer—Tenax, (60/80 mesh), chromatographic grade or equivalent.

6.4.2 Methyl silicone packing—3% OV–1 on Chromosorb-W (60/80 mesh) or equivalent.

6.5 Methanol—Pesticide quality or equivalent.

6.6 Stock standard solutions—Stock standard solutions may be prepared from pure standard materials or purchased as certified solutions. Prepare stock standard solutions in methanol using assayed liquids. Because of the toxicity of benzene and 1,4-dichlorobenzene, primary dilutions of these materials should be prepared in a hood. A NIOSH/MESA approved toxic gas respirator should be used when the analyst handles high concentrations of such materials.

6.6.1 Place about 9.8 mL of methanol into a 10–mL ground glass stoppered volumetric flask. Allow the flask to stand, unstoppered, for about 10 min or until all alcohol wetted surfaces have dried. Weigh the flask to the nearest 0.1 mg.

6.6.2 Using a 100–µL syringe, immediately add two or more drops of assayed reference material to the flask, then reweigh. Be sure that the drops fall directly into the alcohol without contacting the neck of the flask.

6.6.3 Reweigh, dilute to volume, stopper, then mix by inverting the flask several times. Calculate the concentration in µg/µL from the net gain in weight. When compound purity is assayed to be 96% or greater, the weight can be used without correction to calculate the concentration of the stock standard. Commercially prepared stock standards can be used at any concentration if they are certified by the manufacturer or by an independent source.

6.6.4 Transfer the stock standard solution into a Teflon-sealed screw-cap bottle. Store at 4 °C and protect from light.

6.6.5 All standards must be replaced after one month, or sooner if comparison with check standards indicates a problem.

6.7 Secondary dilution standards—Using stock standard solutions, prepare secondary dilution standards in methanol that contain the compounds of interest, either singly or mixed together. The secondary dilution standards should be prepared at concentrations such that the aqueous calibration standards prepared in Section 7.3.1 or 7.4.1 will bracket the working range of the analytical system. Secondary solution standards must be stored with zero headspace and should be checked frequently for signs of degradation or evaporation, especially just prior to preparing calibration standards from them.

6.8 Quality control check sample concentrate—See Section 8.2.1.

7. Calibration

7.1 Assemble a purge and trap system that meets the specifications in Section 5.2. Condition the trap overnight at 180 °C by backflushing with an inert gas flow of at least 20 mL/min. Condition the trap for 10 min once daily prior to use.

7.2 Connect the purge and trap system to a gas chromatograph. The gas chromatograph must be operated using temperature and flow rate conditions equivalent to those given in Table 1. Calibrate the purge and trap-gas chromatographic system using either the external standard technique (Section 7.3) or the internal standard technique (Section 7.4).

7.3 External standard calibration procedure:

7.3.1 Prepare calibration standards at a minimum of three concentration levels for each parameter by carefully adding 20.0 µL of one or more secondary dilution standards to 100, 500, or 1000 mL of reagent water. A 25-µL syringe with a 0.006 in. ID needle should be used for this operation. One of the external standards should be at a concentration near, but above, the MDL (Table 1) and the other concentrations should correspond to the expected range of concentrations found in real samples or should define the working range of the detector. These aqueous standards must be prepared fresh daily.

7.3.2 Analyze each calibration standard according to Section 10, and tabulate peak height or area responses versus the concentration in the standard. The results can be used to prepare a calibration curve for each compound. Alternatively, if the ratio of response to concentration (calibration factor) is a constant over the working range (<10% relative standard deviation, RSD), linearity through the origin can be assumed and the average ratio or calibration factor can be used in place of a calibration curve.

7.4 Internal standard calibration procedure—To use this approach, the analyst must select one or more internal standards that are similar in analytical behavior to the compounds of interest. The analyst must further demonstrate that the measurement of the internal standard is not affected by method or matrix interferences. Because of these limitations, no internal standard can be suggested that is applicable to all samples. The compound, α,α,α,-trifluorotoluene, recommended as a surrogate spiking compound in Section 8.7 has been used successfully as an internal standard.

7.4.1 Prepare calibration standards at a minimum of three concentration levels for each parameter of interest as described in Section 7.3.1.

7.4.2 Prepare a spiking solution containing each of the internal standards using the procedures described in Sections 6.6 and 6.7. It is recommended that the secondary dilution standard be prepared at a concentration of 15 µg/mL of each internal standard compound. The addition of 10 µl of this

standard to 5.0 mL of sample or calibration standard would be equivalent to 30 µg/L.

7.4.3 Analyze each calibration standard according to Section 10, adding 10 µL of internal standard spiking solution directly to the syringe (Section 10.4). Tabulate peak height or area responses against concentration for each compound and internal standard, and calculate response factors (RF) for each compound using Equation 1.

$RF = (A_s)(C_{is}\ (A_{is})(C_s)$

Equation 1

where:

A_s = Response for the parameter to be measured.

A_{is} = Response for the internal standard.

C_{is} = Concentration of the internal standard

C_s = Concentration of the parameter to be measured.

If the RF value over the working range is a constant (<10% RSD), the RF can be assumed to be invariant and the average RF can be used for calculations. Alternatively, the results can be used to plot a calibration curve of response ratios, A_s/A_{is}, vs. RF.

7.5 The working calibration curve, calibration factor, or RF must be verified on each working day by the measurement of a QC check sample.

7.5.1 Prepare the QC check sample as described in Section 8.2.2.

7.5.2 Analyze the QC check sample according to Section 10.

7.5.3 For each parameter, compare the response (Q) with the corresponding calibration acceptance criteria found in Table 2. If the responses for all parameters of interest fall within the designated ranges, analysis of actual samples can begin. If any individual Q falls outside the range, a new calibration curve, calibration factor, or RF must be prepared for that parameter according to Section 7.3 or 7.4.

8. Quality Control

8.1 Each laboratory that uses this method is required to operate a formal quality control program. The minimum requirements of this program consist of an initial demonstration of laboratory capability and an ongoing analysis of spiked samples to evaluate and document data quality. The laboratory must maintain records to document the quality of data that is generated. Ongoing data quality checks are compared with established performance criteria to determine if the results of analyses meet the performance characteristics of the method. When results of sample spikes indicate atypical method performance, a quality control check standard must be analyzed to confirm that the measurements were performed in an in-control mode of operation.

8.1.1 The analyst must make an initial, one-time, demonstration of the ability to generate acceptable accuracy and precision with this method. This ability is established as described in Section 8.2.

8.1.2 In recognition of advances that are occurring in chromatography, the analyst is permitted certain options (detailed in Section 10.1) to improve the separations or lower the cost of measurements. Each time such a modification is made to the method, the analyst is required to repeat the procedure in Section 8.2.

8.1.3 Each day, the analyst must analyze a reagent water blank to demonstrate that interferences from the analytical system are under control.

8.1.4 The laboratory must, on an ongoing basis, spike and analyze a minimum of 10% of all samples to monitor and evaluate laboratory data quality. This procedure is described in Section 8.3.

8.1.5 The laboratory must, on an ongoing basis, demonstrate through the analyses of quality control check standards that the operation of the measurement system is in control. This procedure is described in Section 8.4. The frequency of the check standard analyses is equivalent to 10% of all samples analyzed but may be reduced if spike recoveries from samples (Section 8.3) meet all specified quality control criteria.

8.1.6 The laboratory must maintain performance records to document the quality of data that is generated. This procedure is described in Section 8.5.

8.2 To establish the ability to generate acceptable accuracy and precision, the analyst must perform the following operations.

8.2.1 A quality control (QC) check sample concentrate is required containing each parameter of interest at a concentration of 10 µg/mL in methanol. The QC check sample concentrate must be obtained from the U.S. Environmental Protection Agency, Environmental Monitoring and Support Laboratory in Cincinnati, Ohio, if available. If not available from that source, the QC check sample concentrate must be obtained from another external source. If not available from either source above, the QC check sample concentrate must be prepared by the laboratory using stock standards prepared independently from those used for calibration.

8.2.2 Prepare a QC check sample to contain 20 µg/L of each parameter by adding 200 µL of QC check sample concentrate to 100 mL of reagant water.

8.2.3 Analyze four 5-mL aliquots of the well-mixed QC check sample according to Section 10.

8.2.4 Calculate the average recovery ($\bar{X}$) in µg/L, and the standard deviation of the recovery (s) in µg/L, for each parameter of interest using the four results.

8.2.5 For each parameter compare s and $\bar{X}$ with the corresponding acceptance criteria for precision and accuracy, respectively,

found in Table 2. If s and $\bar{X}$ for all parameters of interest meet the acceptance criteria, the system performance is acceptable and analysis of actual samples can begin. If any individual s exceeds the precision limit or any individual $\bar{X}$ falls outside the range for accuracy, the system performance is unacceptable for that parameter.

NOTE: The large number of parameters in Table 2 present a substantial probability that one or more will fail at least one of the acceptance criteria when all parameters are analyzed.

8.2.6 When one or more of the parameters tested fail at least one of the acceptance criteria, the analyst must proceed according to Section 8.2.6.1 or 8.2.6.2.

8.2.6.1 Locate and correct the source of the problem and repeat the test for all parameters of interest beginning with Section 8.2.3.

8.2.6.2 Beginning with Section 8.2.3, repeat the test only for those parameters that failed to meet criteria. Repeated failure, however, will confirm a general problem with the measurement system. If this occurs, locate and correct the source of the problem and repeat the test for all compounds of interest beginning with Section 8.2.3.

8.3 The laboratory must, on an ongoing basis, spike at least 10% of the samples from each sample site being monitored to assess accuracy. For laboratories analyzing one to ten samples per month, at least one spiked sample per month is required.

8.3.1 The concentration of the spike in the sample should be determined as follows:

8.3.1.1 If, as in compliance monitoring, the concentration of a specific parameter in the sample is being checked against a regulatory concentration limit, the spike should be at that limit or 1 to 5 times higher than the background concentration determined in Section 8.3.2, whichever concentration would be larger.

8.3.1.2 If the concentration of a specific parameter in the sample is not being checked against a limit specific to that parameter, the spike should be at 20 μg/L or 1 to 5 times higher than the background concentration determined in Section 8.3.2, whichever concentration would be larger.

8.3.2 Analyze one 5-mL sample aliquot to determine the background concentration (B) of each parameter. If necessary, prepare a new QC check sample concentrate (Section 8.2.1) appropriate for the background concentrations in the sample. Spike a second 5-mL sample aliquot with 10 μL of the QC check sample concentrate and analyze it to determine the concentration after spiking (A) of each parameter. Calculate each percent recovery (P) as $100(A-B)\%/T$, where T is the known true value of the spike.

8.3.3 Compare the percent recovery (P) for each parameter with the corresponding QC acceptance criteria found in Table 2. These acceptance criteria were calculated to include an allowance for error in measurement of both the background and spike concentrations, assuming a spike to background ratio of 5:1. This error will be accounted for to the extent that the analyst's spike to background ratio approaches 5:1.[7] If spiking was performed at a concentration lower than 20 μg/L, the analyst must use either the QC acceptance criteria in Table 2, or optional QC acceptance criteria calculated for the specific spike concentration. To calculate optional acceptance criteria for the recovery of a parameter: (1) Calculate accuracy (X′) using the equation in Table 3, substituting the spike concentration (T) for C; (2) calculate overall precision (S′) using the equation in Table 3, substituting X′ for $\bar{X}$; (3) calculate the range for recovery at the spike concentration as $(100\ X'/T) \pm 2.44(100\ S'/T)\%$.[7]

8.3.4 If any individual P falls outside the designated range for recovery, that parameter has failed the acceptance criteria. A check standard containing each parameter that failed the criteria must be analyzed as described in Section 8.4.

8.4 If any parameter fails the acceptance criteria for recovery in Section 8.3, a QC check standard containing each parameter that failed must be prepared and analyzed.

NOTE: The frequency for the required analysis of a QC check standard will depend upon the number of parameters being simultaneously tested, the complexity of the sample matrix, and the performance of the laboratory.

8.4.1 Prepare the QC check standard by adding 10 μL of QC check sample concentrate (Section 8.2.1 or 8.3.2) to 5 mL of reagent water. The QC check standard needs only to contain the parameters that failed criteria in the test in Section 8.3.

8.4.2 Analyze the QC check standard to determine the concentration measured (A) of each parameter. Calculate each percent recovery (P_s) as $100\ (A/T)\%$, where T is the true value of the standard concentration.

8.4.3 Compare the percent recovery (P_s) for each parameter with the corresponding QC acceptance criteria found in Table 2. Only parameters that failed the test in Section 8.3 need to be compared with these criteria. If the recovery of any such parameter falls outside the designated range, the laboratory performance for that parameter is judged to be out of control, and the problem must be immediately identified and corrected. The analytical result for that parameter in the unspiked sample is suspect and may not be reported for regulatory compliance purposes.

8.5 As part of the QC program for the laboratory, method accuracy for wastewater samples must be assessed and records must be maintained. After the analysis of five spiked wastewater samples as in Section 8.3, calculate the average percent recovery ($\bar{P}$)

and the standard deviation of the percent recovery (s_p). Express the accuracy assessment as a percent recovery interval from $\bar{P} - 2s_p$ to $\bar{P} + 2s_p$. If $\bar{P}$ = 90% and s_p = 10%, for example, the accuracy interval is expressed as 70–110%. Update the accuracy assessment for each parameter on a regular basis (e.g. after each five to ten new accuracy measurements).

8.6 It is recommended that the laboratory adopt additional quality assurance practices for use with this method. The specific practices that are most productive depend upon the needs of the laboratory and the nature of the samples. Field duplicates may be analyzed to assess the precision of the environmental measurements. When doubt exists over the identification of a peak on the chromatogram, confirmatory techniques such as gas chromatography with a dissimilar column, specific element detector, or mass spectrometer must be used. Whenever possible, the laboratory should analyze standard reference materials and participate in relevant performance evaluation studies.

8.7 The analyst should monitor both the performance of the analytical system and the effectiveness of the method in dealing with each sample matrix by spiking each sample, standard, and reagent water blank with surrogate compounds (e.g. α, α, α,-trifluorotoluene) that encompass the range of the temperature program used in this method. From stock standard solutions prepared as in Section 6.6, add a volume to give 750 µg of each surrogate to 45 mL of reagent water contained in a 50-mL volumetric flask, mix and dilute to volume for a concentration of 15 mg/µL. Add 10 µL of this surrogate spiking solution directly into the 5-mL syringe with every sample and reference standard analyzed. Prepare a fresh surrogate spiking solution on a weekly basis. If the internal standard calibration procedure is being used, the surrogate compounds may be added directly to the internal standard spiking solution (Section 7.4.2).

9. Sample Collection, Preservation, and Handling

9.1 The samples must be iced or refrigerated from the time of collection until analysis. If the sample contains free or combined chlorine, add sodium thiosulfate preservative (10 mg/40 mL is sufficient for up to 5 ppm Cl_2) to the empty sample bottle just prior to shipping to the sampling site. EPA Method 330.4 or 330.5 may be used for measurement of residual chlorine.[8] Field test kits are available for this purpose.

9.2 Collect about 500 mL of sample in a clean container. Adjust the pH of the sample to about 2 by adding 1 + 1 HCl while stirring. Fill the sample bottle in such a manner that no air bubbles pass through the sample as the bottle is being filled. Seal the bottle so that no air bubbles are entrapped in it. Maintain the hermetic seal on the sample bottle until time of analysis.

9.3 All samples must be analyzed within 14 days of collection.[3]

10. Procedure

10.1 Table 1 summarizes the recommended operating conditions for the gas chromatograph. Included in this table are estimated retention times and MDL that can be achieved under these conditions. An example of the separations achieved by Column 1 is shown in Figure 6. Other packed columns, chromatographic conditions, or detectors may be used if the requirements of Section 8.2 are met.

10.2 Calibrate the system daily as described in Section 7.

10.3 Adjust the purge gas (nitrogen or helium) flow rate to 40 mL/min. Attach the trap inlet to the purging device, and set the purge and trap system to purge (Figure 3). Open the syringe valve located on the purging device sample introduction needle.

10.4 Allow the sample to come to ambient temperature prior to introducing it to the syringe. Remove the plunger from a 5-mL syringe and attach a closed syringe valve. Open the sample bottle (or standard) and carefully pour the sample into the syringe barrel to just short of overflowing. Replace the syringe plunger and compress the sample. Open the syringe valve and vent any residual air while adjusting the sample volume to 5.0 mL. Since this process of taking an aliquot destroys the validity of the sample for future analysis, the analyst should fill a second syringe at this time to protect against possible loss of data. Add 10.0 µL of the surrogate spiking solution (Section 8.7) and 10.0 µL of the internal standard spiking solution (Section 7.4.2), if applicable, through the valve bore, then close the valve.

10.5 Attach the syringe-syringe valve assembly to the syringe valve on the purging device. Open the syringe valves and inject the sample into the purging chamber.

10.6 Close both valves and purge the sample for 12.0 ±0.1 min at ambient temperature.

10.7 After the 12-min purge time, disconnect the purging device from the trap. Dry the trap by maintaining a flow of 40 mL/min of dry purge gas through it for 6 min (Figure 4). If the purging device has no provision for bypassing the purger for this step, a dry purger should be inserted into the device to minimize moisture in the gas. Attach the trap to the chromatograph, adjust the purge and trap system to the desorb mode (Figure 5), and begin to temperature program the gas chromatograph. Introduce the trapped materials to the GC column by rapidly heating the trap to 180 °C while backflushing the trap with an inert gas between 20 and 60 mL/min for 4 min. If rapid heating of the trap cannot be achieved, the GC column must be used as

a secondary trap by cooling it to 30 °C (sub-ambient temperature, if poor peak geometry and random retention time problems persist) instead of the initial program temperature of 50 °C.

10.8 While the trap is being desorbed into the gas chromatograph column, empty the purging chamber using the sample introduction syringe. Wash the chamber with two 5-mL flushes of reagent water.

10.9 After desorbing the sample for 4 min, recondition the trap by returning the purge and trap system to the purge mode. Wait 15 s, then close the syringe valve on the purging device to begin gas flow through the trap. The trap temperature should be maintained at 180 °C. After approximately 7 min, turn off the trap heater and open the syringe valve to stop the gas flow through the trap. When the trap is cool, the next sample can be analyzed.

10.10 Identify the parameters in the sample by comparing the retention times of the peaks in the sample chromatogram with those of the peaks in standard chromatograms. The width of the retention time window used to make identifications should be based upon measurements of actual retention time variations of standards over the course of a day. Three times the standard deviation of a retention time for a compound can be used to calculate a suggested window size; however, the experience of the analyst should weigh heavily in the interpretation of chromatograms.

10.11 If the response for a peak exceeds the working range of the system, prepare a dilution of the sample with reagent water from the aliquot in the second syringe and reanalyze.

11. Calculations

11.1 Determine the concentration of individual compounds in the sample.

11.1.1 If the external standard calibration procedure is used, calculate the concentration of the parameter being measured from the peak response using the calibration curve or calibration factor determined in Section 7.3.2.

11.1.2 If the internal standard calibration procedure is used, calculate the concentration in the sample using the response factor (RF) determined in Section 7.4.3 and Equation 2.

$$\text{Concentration } (\mu g/L) = \frac{(A_s)(C_{is})}{(A_{is})(RF)}$$

Equation 2

where:

A_s = Response for the parameter to be measured.

A_{is} = Response for the internal standard.

C_{is} = Concentration of the internal standard.

11.2 Report results in µg/L without correction for recovery data. All QC data obtained should be reported with the sample results.

12. Method Performance

12.1 The method detection limit (MDL) is defined as the minimum concentration of a substance that can be measured and reported with 99% confidence that the value is above zero.[1] The MDL concentrations listed in Table 1 were obtained using reagent water.[9] Similar results were achieved using representative wastewaters. The MDL actually achieved in a given analysis will vary depending on instrument sensitivity and matrix effects.

12.2 This method has been demonstrated to be applicable for the concentration range from the MDL to 100 × MDL.[9] Direct aqueous injection techniques should be used to measure concentration levels above 1000 × MDL.

12.3 This method was tested by 20 laboratories using reagent water, drinking water, surface water, and three industrial wastewaters spiked at six concentrations over the range 2.1 to 550 µg/L.[9] Single operator precision, overall precision, and method accuracy were found to be directly related to the concentration of the parameter and essentially independent of the sample matrix. Linear equations to describe these relationships are presented in Table 3.

References

1. 40 CFR part 136, appendix B.

2. Lichtenberg, J.J. ''Determining Volatile Organics at Microgram-per-Litre-Levels by Gas Chromatography,'' Journal American Water Works Association, *66,* 739 (1974).

3. Bellar, T.A., and Lichtenberg, J.J. ''Semi-Automated Headspace Analysis of Drinking Waters and Industrial Waters for Purgeable Volatile Organic Compounds,'' Proceedings of Symposium on Measurement of Organic Pollutants in Water and Wastewater. American Society for Testing and Materials, STP 686, C.E. Van Hall, editor, 1978.

4. ''Carcinogens—Working with Carcinogens,'' Department of Health, Education, and Welfare, Public Health Service, Center for Disease Control, National Institute for Occupational Safety and Health. Publication No. 77–206, August 1977.

5. ''OSHA Safety and Health Standards, General Industry,'' (29 CFR part 1910), Occupational Safety and Health Administration, OSHA 2206 (Revised, January 1976).

6. ''Safety in Academic Chemistry Laboratories,'' American Chemical Society Publication, Committee on Safety, 3rd Edition, 1979.

7. Provost, L.P., and Elder, R.S. ''Interpretation of Percent Recovery Data,'' *American Laboratory*, *15,* 58-63 (1983). (The value 2.44 used in the equation in Section 8.3.3. is two times the value 1.22 derived in this report.)

8.''Methods 330.4 (Titrimetric, DPD-FAS) and 330.5 (Spectrophotometric, DPD) for Chlorine, Total Residual,'' Methods for Chemical Analysis of Water and Wastes, EPA–600/4–79–020, U.S. Environmental Protection Agency, Office of Research and Development, Environmental Monitoring and Support Laboratory, Cincinnati, Ohio 45268. March 1979.

9. ''EPA Method Study 25, Method 602, Purgeable Aromatics,'' EPA 600/4–84–042, National Technical Information Service, PB84–196682, Springfield, Virginia 22161, May 1984.

TABLE 1—CHROMATOGRAPHIC CONDITIONS AND METHOD DETECTION LIMITS

Parameter	Retention time (min)		Method detection limit (µg/L)
	Column 1	Column 2	
Benzene	3.33	2.75	0.2

TABLE 1—CHROMATOGRAPHIC CONDITIONS AND METHOD DETECTION LIMITS—Continued

Parameter	Retention time (min)		Method detection limit (µg/L)
	Column 1	Column 2	
Toluene	5.75	4.25	0.2
Ethylbenzene	8.25	6.25	0.2
Chlorobenzene	9.17	8.02	0.2
1,4-Dichlorobenzene	16.8	16.2	0.3
1,3-Dichlorobenzene	18.2	15.0	0.4
1,2-Dichlorobenzene	25.9	19.4	0.4

Column 1 conditions: Supelcoport (100/120 mesh) coated with 5% SP–1200/1.75% Bentone-34 packed in a 6 ft × 0.085 in. ID stainless steel column with helium carrier gas at 36 mL/min flow rate. Column temperature held at 50 °C for 2 min then programmed at 6 °C/min to 90 °C for a final hold.

Column 2 conditions: Chromosorb W-AW (60/80 mesh) coated with 5% 1,2,3-Tris(2-cyanoethyoxy)propane packed in a 6 ft × 0.085 in. ID stainless steel column with helium carrier gas at 30 mL/min flow rate. Column temperature held at 40 °C for 2 min then programmed at 2 °C/min to 100 °C for a final hold.

TABLE 2—CALIBRATION AND QC ACCEPTANCE CRITERIA—METHOD 602 [A]

Parameter	Range for Q (µg/L)	Limit for s (µg/L)	Range for $\bar{X}$ (µg/L)	Range for P, P_s(%)
Benzene	15.4–24.6	4.1	10.0–27.9	39–150
Chlorobenzene	16.1–23.9	3.5	12.7–25.4	55–135
1,2-Dichlorobenzene	13.6–26.4	5.8	10.6–27.6	37–154
1,3-Dichlorobenzene	14.5–25.5	5.0	12.8–25.5	50–141
1,4-Dichlorobenzene	13.9–26.1	5.5	11.6–25.5	42–143
Ethylbenzene	12.6–27.4	6.7	10.0–28.2	32–160
Toluene	15.5–24.5	4.0	11.2–27.7	46–148

Q = Concentration measured in QC check sample, in µg/L (Section 7.5.3).
s = Standard deviation of four recovery measurements, in µg/L (Section 8.2.4).
$\bar{X}$ = Average recovery for four recovery measurements, in µg/L (Section 8.2.4).
P_s, P = Percent recovery measured (Section 8.3.2, Section 8.4.2).
[a] Criteria were calculated assuming a QC check sample concentration of 20 µg/L.

Note: These criteria are based directly upon the method performance data in Table 3. Where necessary, the limits for recovery have been broadened to assure applicability of the limits to concentrations below those used to develop Table 3.

TABLE 3—METHOD ACCURACY AND PRECISION AS FUNCTIONS OF CONCENTRATION—METHOD 602

Parameter	Accuracy, as recovery, X′ (µg/L)	Single analyst precision, s′ (µg/L)	Overall precision, S′ (µg/L)
Benzene	0.92C + 0.57	0.09$\bar{X}$ + 0.59	0.21$\bar{X}$ + 0.56
Chlorobenzene	0.95C + 0.02	0.09$\bar{X}$ + 0.23	0.17$\bar{X}$ + 0.10
1,2-Dichlorobenzene	0.93C + 0.52	0.17$\bar{X}$ − 0.04	0.22$\bar{X}$ + 0.53
1,3-Dichlorobenzene	0.96C − 0.05	0.15$\bar{X}$ − 0.10	0.19$\bar{X}$ + 0.09
1,4-Dichlorobenzene	0.93C − 0.09	0.15$\bar{X}$ + 0.28	0.20$\bar{X}$ + 0.41
Ethylbenzene	0.94C + 0.31	0.17$\bar{X}$ + 0.46	0.26$\bar{X}$ + 0.23
Toluene	0.94C + 0.65	0.09$\bar{X}$ + 0.48	0.18$\bar{X}$ + 0.71

X′ = Expected recovery for one or more measurements of a sample containing a concentration of C, in µg/L.
S′ = Expected single analyst standard deviation of measurements at an average concentration found of $\bar{X}$, in X µg/L.
S′ = Expected interlaboratory standard deviation of measurements at an average concentration found of $\bar{X}$, in µg/L.
C = True value for the Concentration, in µg/L.
$\bar{X}$ = Average recovery found for measurements of samples containing a concentration of C, in µg/L.

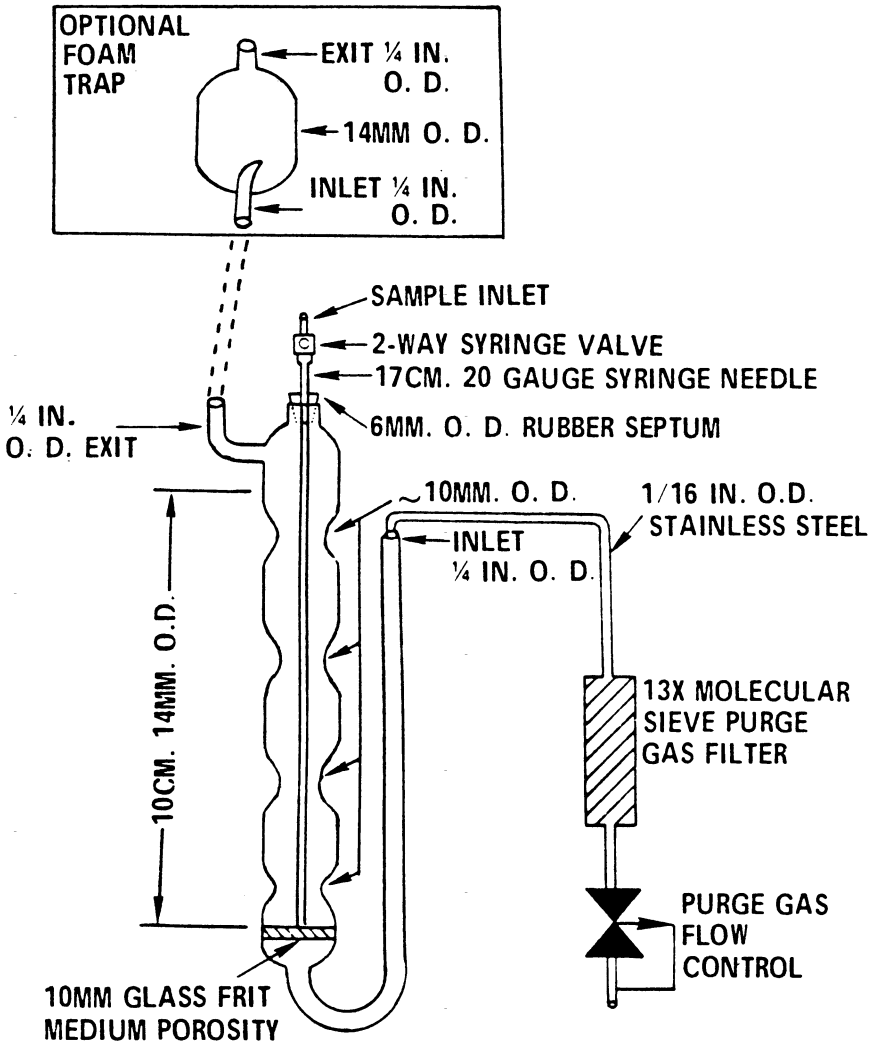

Figure 1. Purging device.

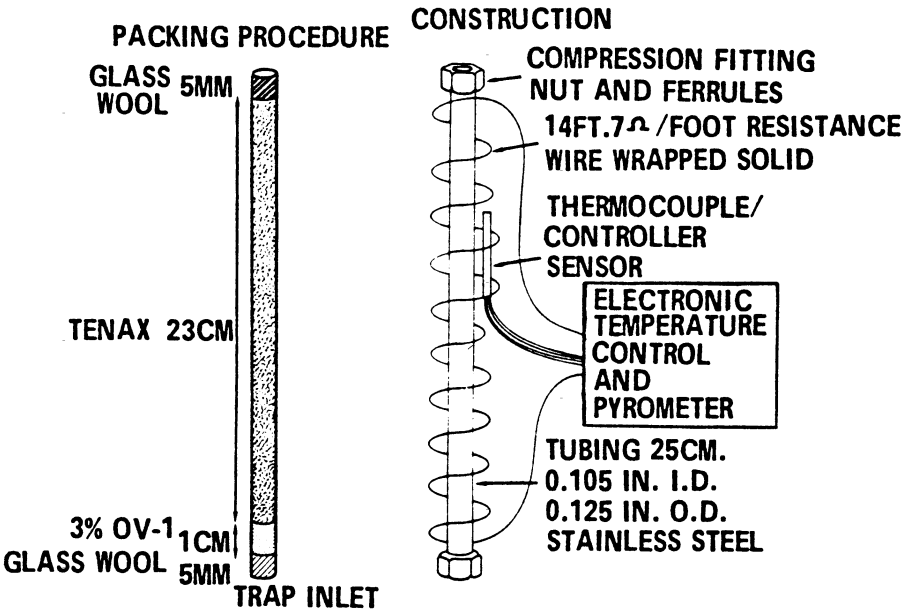

Figure 2. Trap packings and construction to include desorb capability.

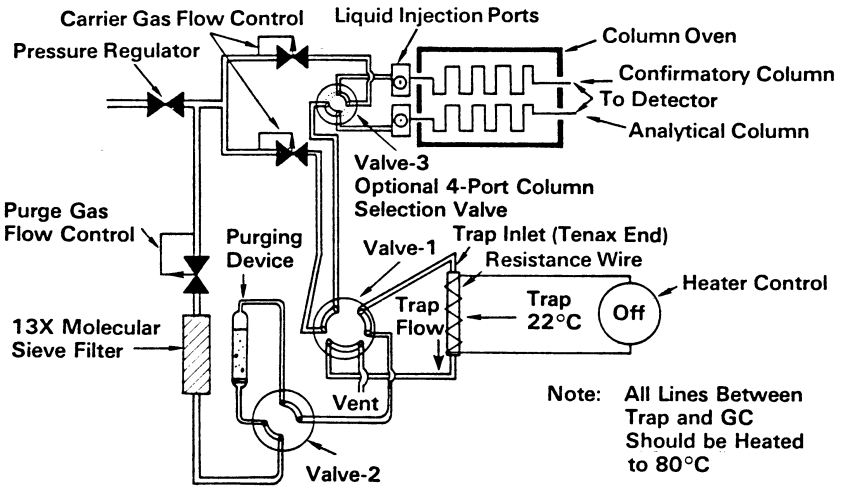

Figure 3. Purge and trap system - purge mode.

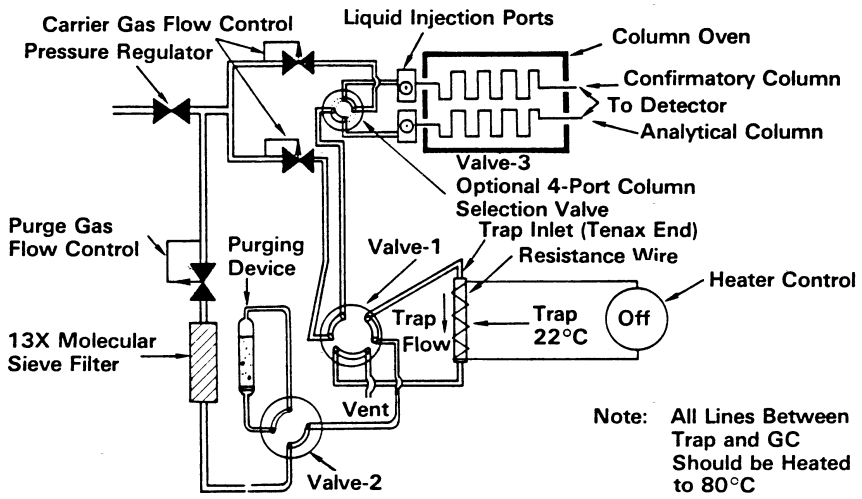

Figure 4. Purge and trap system-dry mode.

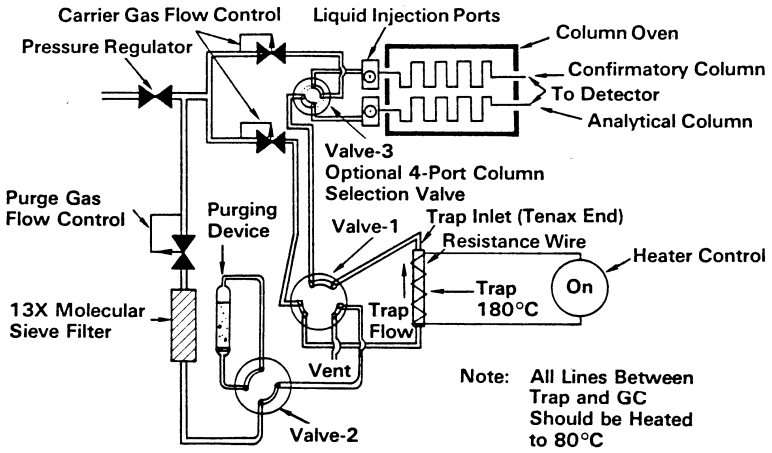

Figure 5. Purge and trap system-desorb mode.

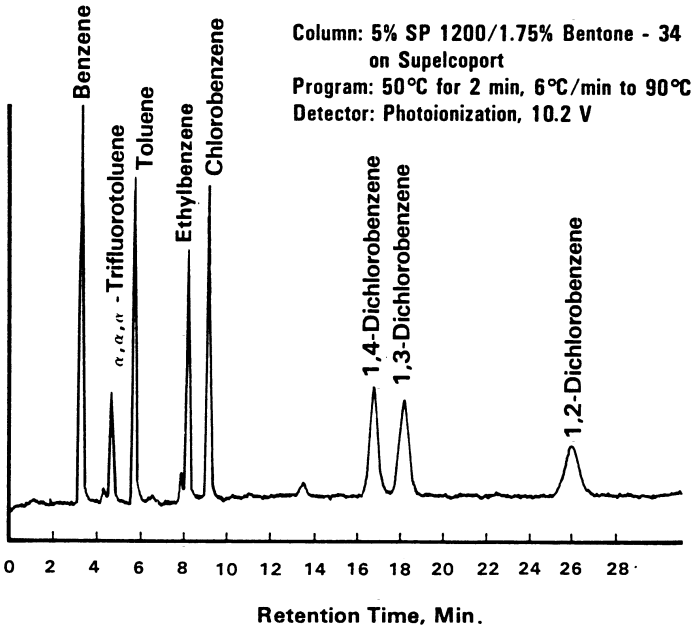

Figure 6. Gas chromatogram of purgeable aromatics.

METHOD 603—ACROLEIN AND ACRYLONITRILE

1. Scope and Application

1.1 This method covers the determination of acrolein and acrylonitrile. The following parameters may be determined by this method:

Parameter	STORET No.	CAS No.
Acrolein	34210	107–02–8
Acrylonitrile	34215	107–13–1

1.2 This is a purge and trap gas chromatographic (GC) method applicable to the determination of the compounds listed above in municipal and industrial discharges as provided under 40 CFR 136.1. When this method is used to analyze unfamiliar samples for either or both of the compounds above, compound identifications should be supported by at least one additional qualitative technique. This method describes analytical conditions for a second gas chromatographic column that can be used to confirm measurements made with the primary column. Method 624 provides gas chromatograph/mass spectrometer (GC/MS) conditions appropriate for the qualitative and quantitative confirmation of results for the parameters listed above, if used with the purge and trap conditions described in this method.

1.3 The method detection limit (MDL, defined in Section 12.1)[1] for each parameter is listed in Table 1. The MDL for a specific wastewater may differ from those listed, depending upon the nature of interferences in the sample matrix.

1.4 Any modification of this method, beyond those expressly permitted, shall be considered as a major modification subject to application and approval of alternate test procedures under 40 CFR 136.4 and 136.5.

1.5 This method is restricted to use by or under the supervision of analysts experienced in the operation of a purge and trap system and a gas chromatograph and in the interpretation of gas chromatograms. Each analyst must demonstrate the ability to generate acceptable results with this method using the procedure described in Section 8.2.

2. Summary of Method

2.1 An inert gas is bubbled through a 5-mL water sample contained in a heated purging chamber. Acrolein and acrylonitrile are transferred from the aqueous phase to the vapor phase. The vapor is swept through a sorbent trap where the analytes are trapped. After the purge is completed, the trap is heated and backflushed with the inert gas to desorb the compound onto a gas chromatographic column. The gas chromatograph is temperature programmed to separate the analytes which are then detected with a flame ionization detector.[2 3]

2.2 The method provides an optional gas chromatographic column that may be helpful in resolving the compounds of interest from the interferences that may occur.

3. Interferences

3.1 Impurities in the purge gas and organic compound outgassing from the plumbing of the trap account for the majority of contamination problems. The analytical system must be demonstrated to be free from contamination under the conditions of the analysis by running laboratory reagent blanks as described in Section 8.1.3. The use of non-Teflon plastic tubing, non-Teflon thread sealants, or flow controllers with rubber components in the purge and trap system should be avoided.

3.2 Samples can be contaminated by diffusion of volatile organics through the septum seal into the sample during shipment and storage. A field reagent blank prepared from reagent water and carried through the sampling and handling protocol can serve as a check on such contamination.

3.3 Contamination by carry-over can occur whenever high level and low level samples are sequentially analyzed. To reduce carry-over, the purging device and sample syringe must be rinsed between samples with reagent water. Whenever an unusually concentrated sample is encountered, it should be followed by an analysis of reagent water to check for cross contamination. For samples containing large amounts of water-soluble materials, suspended solids, high boiling compounds or high analyte levels, it may be necessary to wash the purging device with a detergent solution, rinse it with distilled water, and then dry it in an oven at 105 °C between analyses. The trap and other parts of the system are also subject to contamination, therefore, frequent bakeout and purging of the entire system may be required.

4. Safety

4.1 The toxicity or carcinogenicity of each reagent used in this method has not been precisely defined; however, each chemical compound should be treated as a potential health hazard. From this view point, exposure to these chemicals must be reduced to the lowest possible level by whatever means available. The laboratory is responsible for maintaining a current awareness file of OSHA regulations regarding the safe handling of the chemicals specified in this method. A reference file of material data handling sheets should also be made available to all personnel involved in the chemical analysis. Additional references to laboratory safety are available and have been identified[4 6] for the information of the analyst.

5. Apparatus and Materials

5.1 Sampling equipment, for discrete sampling.

5.1.1 Vial—25-mL capacity or larger, equipped with a screw cap with a hole in the center (Pierce #13075 or equivalent). Detergent wash, rinse with tap and distilled water, and dry at 105 °C before use.

5.1.2 Septum—Teflon-faced silicone (Pierce #12722 or equivalent). Detergent wash, rinse with tap and distilled water and dry at 105 °C for 1 h before use.

5.2 Purge and trap system—The purge and trap system consists of three separate pieces of equipment: a purging device, trap, and desorber. Several complete systems are now commercially available.

5.2.1 The purging device must be designed to accept 5-mL, samples with a water column at least 3 cm deep. The gaseous head space between the water column and the trap must have a total volume of less than 15 mL. The purge gas must pass through the water column as finely divided bubbles with a diameter of less than 3 mm at the origin. The purge gas must be introduced no more than 5 mm from the base of the water column. The purging device must be capable of being heated to 85 °C within 3.0 min after transfer of the sample to the purging device and being held at 85 ±2 °C during the purge cycle. The entire water column in the purging device must be heated. Design of this modification to the standard purging device is optional, however, use of a water bath is suggested.

5.2.1.1 Heating mantle—To be used to heat water bath.

5.2.1.2 Temperature controller—Equipped with thermocouple/sensor to accurately control water bath temperature to ±2 °C. The purging device illustrated in Figure 1 meets these design criteria.

5.2.2 The trap must be at least 25 cm long and have an inside diameter of at least 0.105 in. The trap must be packed to contain 1.0 cm of methyl silicone coated packing (Section 6.5.2) and 23 cm of 2,6-diphenylene oxide polymer (Section 6.5.1). The minimum specifications for the trap are illustrated in Figure 2.

5.2.3 The desorber must be capable of rapidly heating the trap to 180 °C, The desorber illustrated in Figure 2 meets these design criteria.

5.2.4 The purge and trap system may be assembled as a separate unit as illustrated in Figure 3 or be coupled to a gas chromatograph.

5.3 pH paper—Narrow pH range, about 3.5 to 5.5 (Fisher Scientific Short Range Alkacid No. 2, #14–837–2 or equivalent).

5.4 Gas chromatograph—An analytical system complete with a temperature programmable gas chromatograph suitable for on-column injection and all required accessories including syringes, analytical columns, gases, detector, and strip-chart recorder. A data system is recommended for measuring peak areas.

5.4.1 Column 1—10 ft long × 2 mm ID glass or stainless steel, packed with Porapak-QS (80/100 mesh) or equivalent. This column was used to develop the method performance statements in Section 12. Guidelines for the use of alternate column packings are provided in Section 10.1.

5.4.2 Column 2—6 ft long × 0.1 in. ID glass or stainless steel, packed with Chromosorb 101 (60/80 mesh) or equivalent.

5.4.3 Detector—Flame ionization detector. This type of detector has proven effective in the analysis of wastewaters for the parameters listed in the scope (Section 1.1), and was used to develop the method performance statements in Section 12. Guidelines for the use of alternate detectors are provided in Section 10.1.

5.5 Syringes—5-mL, glass hypodermic with Luerlok tip (two each).

5.6 Micro syringes—25-µL, 0.006 in. ID needle.

5.7 Syringe valve—2-way, with Luer ends (three each).

5.8 Bottle—15-mL, screw-cap, with Teflon cap liner.

5.9 Balance—Analytical, capable of accurately weighing 0.0001 g.

6. Reagents

6.1 Reagent water—Reagent water is defined as a water in which an interferent is not observed at the MDL of the parameters of interest.

6.1.1 Reagent water can be generated by passing tap water through a carbon filter bed containing about 1 lb of activated carbon (Filtrasorb-300, Calgon Corp., or equivalent).

6.1.2 A water purification system (Millipore Super-Q or equivalent) may be used to generate reagent water.

6.1.3 Regent water may also be prepared by boiling water for 15 min. Subsequently, while maintaining the temperature at 90 °C, bubble a contaminant-free inert gas through the water for 1 h. While still hot, transfer the water to a narrow mouth screw-cap bottle and seal with a Teflon-lined septum and cap.

6.2 Sodium thiosulfate—(ACS) Granular.

6.3 Sodium hydroxide solution (10 N)—Dissolve 40 g of NaOH (ACS) in reagent water and dilute to 100 mL.

6.4 Hydrochloric acid (1 + 1)—Slowly, add 50 mL of concentrated HCl (ACS) to 50 mL of reagent water.

6.5 Trap Materials:

6.5.1 2,6-Diphenylene oxide polymer—Tenax (60/80 mesh), chromatographic grade or equivalent.

6.5.2 Methyl silicone packing—3% OV–1 on Chromosorb-W (60/80 mesh) or equivalent.

6.6 Stock standard solutions—Stock standard solutions may be prepared from pure standard materials or purchased as certified solutions. Prepare stock standard solutions in reagent water using assayed liquids. Since acrolein and acrylonitrile are lachrymators, primary dilutions of these compounds should be prepared in a hood. A NIOSH/MESA approved toxic gas respirator should be used when the analyst handles high concentrations of such materials.

6.6.1 Place about 9.8 mL of reagent water into a 10-mL ground glass stoppered volumetric flask. For acrolein standards the reagent water must be adjusted to pH 4 to 5. Weight the flask to the nearest 0.1 mg.

6.6.2 Using a 100-µL syringe, immediately add two or more drops of assayed reference material to the flask, then reweigh. Be sure that the drops fall directly into the water without contacting the neck of the flask.

6.6.3 Reweigh, dilute to volume, stopper, then mix by inverting the flask several times. Calculate the concentration in µg/µL from the net gain in weight. When compound purity is assayed to be 96% or greater, the weight can be used without correction to calculate the concentration of the stock staldard. Optionally, stock standard solutions may be prepared using the pure standard material by volumetrically measuring the appropriate amounts and determining the weight of the material using the density of the material. Commercially prepared stock standards may be used at any concentration if they are certified by the manufactaurer or by an independent source.

6.6.4 Transfer the stock standard solution into a Teflon-sealed screw-cap bottle. Store at 4 °C and protect from light.

6.6.5 Prepare fresh standards daily.

6.7 Secondary dilution standards—Using stock standard solutions, prepare secondary dilution standards in reagent water that contain the compounds of interest, either singly or mixed together. The secondary dilution standards should be prepared at concentrations such that the aqueous calibration standards prepared in Section 7.3.1 or 7.4.1 will bracket the working range of the analytical system. Secondary dilution standards should be prepared daily and stored at 4 °C.

6.8 Quality control check sample concentrate—See Section 8.2.1.

7. Calibration

7.1 Assemble a purge and trap system that meets the specifications in Section 5.2. Condition the trap overnight at 180 °C by backflushing with an inert gas flow of at least 20 mL/min. Condition the trap for 10 min once daily prior to use.

7.2 Connect the purge and trap system to a gas chromatograph. The gas chromatograph must be operated using temperature and flow rate conditions equivalent to those given in Table 1. Calibrate the purge and trap-gas chromatographic system using either the external standard technique (Section 7.3) or the internal standard technique (Section 7.4).

7.3 External standard calibration procedure:

7.3.1 Prepare calibration standards at a minimum of three concentration levels for each parameter by carefully adding 20.0 µL of one or more secondary dilution standards to 100, 500, or 1000 mL of reagent water. A 25-µL syringe with a 0.006 in. ID needle should be used for this operation. One of the external standards should be at a concentration near, but above, the MDL and the other concentrations should correspond to the expected range of concentrations found in real samples or should define the working range of the detector. These standards must be prepared fresh daily.

7.3.2 Analyze each calibration standard according to Section 10, and tabulate peak height or area responses versus the concentration of the standard. The results can be used to prepare a calibration curve for each compound. Alternatively, if the ratio of response to concentration (calibration factor) is a constant over the working range (<10% relative standard deviation, RSD), linearity through the origin can be assumed and the average ratio or calibration factor can be used in place of a calibration curve.

7.4 Internal standard calibration procedure—To use this approach, the analyst must select one or more internal standards that are similar in analytical behavior to the compounds of interest. The analyst must further demonstrate that the measurement of the internal standard is not affected by method or matrix interferences. Because of these limitations, no internal standard can be suggested that is applicable to all samples.

7.4.1 Prepare calibration standards at a minimum of three concentration levels for each parameter of interest as described in Section 7.3.1.

7.4.2 Prepare a spiking solution containing each of the internal standards using the procedures described in Sections 6.6 and 6.7. It is recommended that the secondary dilution standard be prepared at a concentration of 15 µg/mL of each internal standard compound. The addition of 10 µL of this standard to 5.0 mL of sample or calibration standard would be equivalent to 30 µg/L.

7.4.3 Analyze each calibration standard according to Section 10, adding 10 µL of internal standard spiking solution directly to the syringe (Section 10.4). Tabulate peak height or area responses against concentration for each compound and internal standard, and calculate response factors (RF) for each compound using Equation 1.

$$RF = (A_s)(C_{is}\ (A_{is})(C_s)$$

Equation 1

where:

A_s = Response for the parameter to be measured.

A_{is} = Response for the internal standard.

C_{is} = Concentration of the internal standard.

C_s = Concentration of the parameter to be measured.

If the RF value over the working range is a constant (<10% RSD), the RF can be assumed to be invariant and the average RF can be used for calculations. Alternatively, the results can be used to plot a calibration curve of response ratios, A_s/A_{is}, vs. RF.

7.5 The working calibration curve, calibration factor, or RF must be verified on each working day by the measurement of a QC check sample.

7.5.1 Prepare the QC check sample as described in Section 8.2.2.

7.5.2 Analyze the QC check sample according to Section 10.

7.5.3 For each parameter, compare the response (Q) with the corresponding calibration acceptance criteria found in Table 2. If the responses for all parameters of interest fall within the designated ranges, analysis of actual samples can begin. If any individual Q falls outside the range, a new calibration curve, calibration factor, or RF must be prepared for that parameter according to Section 7.3 or 7.4.

8. Quality Control

8.1 Each laboratory that uses this method is required to operate a formal quality control program. The minimum requirements of this program consist of an initial demonstration of laboratory capability and an ongoing analysis of spiked samples to evaluate and document data quality. The laboratory must maintain records to document the quality of data that is generated. Ongoing data quality checks are compared with established performance criteria to determine if the results of analyses meet the performance characteristics of the method. When results of sample spikes indicate atypical method performance, a quality control check standard must be analyzed to confirm that the measurements were performed in an in-control mode of operation.

8.1.1 The analyst must make an initial, one-time, demonstration of the ability to generate acceptable accuracy and precision with this method. This ability is established as described in Section 8.2.

8.1.2 In recognition of advances that are occurring in chromatography, the analyst is permitted certain options (detailed in Section 10.1) to improve the separations or lower the cost of measurements. Each time such a modification is made to the method, the analyst is required to repeat the procedure in Section 8.2.

8.1.3 Each day, the analyst must analyze a reagent water blank to demonstrate that interferences from the analytical system are under control.

8.1.4 The laboratory must, on an ongoing basis, spike and analyze a minimum of 10% of all samples to monitor and evaluate laboratory data quality. This procedure is described in Section 8.3.

8.1.5 The laboratory must, on an ongoing basis, demonstrate through the analyses of quality control check standards that the operation of the measurement system is in control. This procedure is described in Section 8.4. The frequency of the check standard analyses is equivalent to 10% of all samples analyzed but may be reduced if spike recoveries from samples (Section 8.3) meet all specified quality control criteria.

8.1.6 The laboratory must maintain performance records to document the quality of data that is generated. This procedure is described in Section 8.5.

8.2 To establish the ability to generate acceptable accuracy and precision, the analyst must perform the following operations.

8.2.1 A quality control (QC) check sample concentrate is required containing each parameter of interest at a concentration of 25 µg/mL in reagent water. The QC check sample concentrate must be obtained from the U.S. Environmental Protection Agency, Environmental Monitoring and Support Laboratory in Cincinnati, Ohio, if available. If not available from that source, the QC check sample concentrate must be obtained from another external source. If not available from either source above, the QC check sample concentrate must be prepared by the laboratory using stock standards prepared independently from those used for calibration.

8.2.2 Prepare a QC check sample to contain 50 µg/L of each parameter by adding 200 µL of QC check sample concentrate to 100 mL of reagent water.

8.2.3 Analyze four 5-mL aliquots of the well-mixed QC check sample according to Section 10.

8.2.4 Calculate the average recovery ($\bar{X}$) in µg/L, and the standard deviation of the recovery (s) in µg/L, for each parameter using the four results.

8.2.5 For each parameter compare s and $\bar{X}$ with the corresponding acceptance criteria for precision and accuracy, respectively, found in Table 3. If s and $\bar{X}$ for all parameters of interest meet the acceptance criteria, the system performance is acceptable and analysis of actual samples can begin. If either s exceeds the precision limit or $\bar{X}$ falls outside the range for accuracy, the system performance is unacceptable for that parameter. Locate and correct the source of the problem and repeat the test for each compound of interest.

8.3 The laboratory must, on an ongoing basis, spike at least 10% of the samples from each sample site being monitored to assess accuracy. For laboratories analyzing one to

ten samples per month, at least one spiked sample per month is required.

8.3.1 The concentration of the spike in the sample should be determined as follows:

8.3.1.1 If, as in compliance monitoring, the concentration of a specific parameter in the sample is being checked against a regulatory concentration limit, the spike should be at that limit or 1 to 5 times higher than the background concentration determined in Section 8.3.2, whichever concentration would be larger.

8.3.1.2 If the concentration of a specific parameter in the sample is not being checked against a limit specific to that parameter, the spike should be at 50 µg/L or 1 to 5 times higher than the background concentration determined in Section 8.3.2, whichever concentration would be larger.

8.3.2 Analyze one 5-mL sample aliquot to determine the background concentration (B) of each parameter. If necessary, prepare a new QC check sample concentrate (Section 8.2.1) appropriate for the background concentrations in the sample. Spike a second 5-mL sample aliquot with 10 µL of the QC check sample concentrate and analyze it to determine the concentration after spiking (A) of each parameter. Calculate each percent recovery (P) as $100(A-B)\%/T$, where T is the known true value of the spike.

8.3.3 Compare the percent recovery (P) for each parameter with the corresponding QC acceptance criteria found in Table 3. These acceptance criteria were calculated to include an allowance for error in measurement of both the background and spike concentrations, assuming a spike to background ratio of 5:1. This error will be accounted for to the extent that the analyst's spike to background ratio approaches 5:1.[7]

8.3.4 If any individual P falls outside the designated range for recovery, that parameter has failed the acceptance criteria. A check standard containing each parameter that failed the criteria must be analyzed as described in Section 8.4.

8.4 If any parameter fails the acceptance criteria for recovery in Section 8.3, a QC check standard containing each parameter that failed must be prepared and analyzed.

NOTE: The frequency for the required analysis of a QC check standard will depend upon the number of parameters being simultaneously tested, the complexity of the sample matrix, and the performance of the laboratory.

8.4.1 Prepare the QC check standard by adding 10 µL of QC check sample concentrate (Section 8.2.1 or 8.3.2) to 5 mL of reagent water. The QC check standard needs only to contain the parameters that failed criteria in the test in Section 8.3.

8.4.2 Analyze the QC check standard to determine the concentration measured (A) of each parameter. Calculate each percent recovery (P_s) as 100 (A/T)%, where T is the true value of the standard concentration.

8.4.3 Compare the percent recovery (P_s) for each parameter with the corresponding QC acceptance criteria found in Table 3. Only parameters that failed the test in Section 8.3 need to be compared with these criteria. If the recovery of any such parameter falls outside the designated range, the laboratory performance for that parameter is judged to be out of control, and the problem must be immediately identified and corrected. The analytical result for that parameter in the unspiked sample is suspect and may not be reported for regulatory compliance purposes.

8.5 As part of the QC program for the laboratory, method accuracy for wastewater samples must be assessed and records must be maintained. After the analysis of five spiked wastewater samples as in Section 8.3, calculate the average percent recovery ($\bar{P}$) and the standard deviation of the percent recovery (s_p). Express the accuracy assessment as a percent recovery interval from $\bar{P}-2s_p$ to $\bar{P}+2s_p$. If $\bar{P}$ = 90% and s_p = 10%, for example, the accuracy interval is expressed as 70–110%. Update the accuracy assessment for each parameter on a regular basis (e.g. after each five to ten new accuracy measurements).

8.6 It is recommended that the laboratory adopt additional quality assurance practices for use with this method. The specific practices that are most productive depend upon the needs of the laboratory and the nature of the samples. Field duplicates may be analyzed to assess the precision of the environmental measurements. When doubt exists over the identification of a peak on the chromatogram, confirmatory techniques such as gas chromatography with a dissimilar column or mass spectrometer must be used. Whenever possible, the laboratory should analyze standard reference materials and participate in relevant performance evaluation studies.

9. Sample Collection, Preservation, and Handling

9.1 All samples must be iced or refrigerated from the time of collection until analysis. If the sample contains free or combined chlorine, add sodium thiosulfate preservative (10 mg/40 mL is sufficient for up to 5 ppm Cl_2) to the empty sample bottle just prior to shipping to the sampling site. EPA Methods 330.4 and 330.5 may be used for measurement of residual chlorine.[8] Field test kits are available for this purpose.

9.2 If acrolein is to be analyzed, collect about 500 mL of sample in a clean glass container. Adjust the pH of the sample to 4 to 5 using acid or base, measuring with narrow range pH paper. Samples for acrolein analysis receiving no pH adjustment must be analyzed within 3 days of sampling.

9.3 Grab samples must be collected in glass containers having a total volume of at least 25 mL. Fill the sample bottle just to overflowing in such a manner that no air bubbles pass through the sample as the bottle is being filled. Seal the bottle so that no air bubbles are entrapped in it. If preservative has been added, shake vigorously for 1 min. Maintain the hermetic seal on the sample bottle until time of analysis.

9.4 All samples must be analyzed within 14 days of collection.[3]

10. Procedure

10.1 Table 1 summarizes the recommended operating conditions for the gas chromatograph. Included in this table are estimated retention times and MDL that can be achieved under these conditions. An example of the separations achieved by Column 1 is shown in Figure 5. Other packed columns, chromatographic conditions, or detectors may be used if the requirements of Section 8.2 are met.

10.2 Calibrate the system daily as described in Section 7.

10.3 Adjust the purge gas (nitrogen or helium) flow rate to 20 mL-min. Attach the trap inlet to the purging device, and set the purge and trap system to purge (Figure 3). Open the syringe valve located on the purging device sample introduction needle.

10.4 Remove the plunger from a 5-mL syringe and attach a closed syringe valve. Open the sample bottle (or standard) and carefully pour the sample into the syringe barrel to just short of overflowing. Replace the syringe plunger and compress the sample. Open the syringe valve and vent any residual air while adjusting the sample volume to 5.0 mL. Since this process of taking an aliquot destroys the validity of the sample for future analysis, the analyst should fill a second syringe at this time to protect against possible loss of data. Add 10.0 µL of the internal standard spiking solution (Section 7.4.2), if applicable, through the valve bore then close the valve.

10.5 Attach the syringe-syringe valve assembly to the syringe valve on the purging device. Open the syringe valves and inject the sample into the purging chamber.

10.6 Close both valves and purge the sample for 15.0 ±0.1 min while heating at 85 ±2 °C.

10.7 After the 15-min purge time, attach the trap to the chromatograph, adjust the purge and trap system to the desorb mode (Figure 4), and begin to temperature program the gas chromatograph. Introduce the trapped materials to the GC column by rapidly heating the trap to 180 °C while backflushing the trap with an inert gas between 20 and 60 mL/min for 1.5 min.

10.8 While the trap is being desorbed into the gas chromatograph, empty the purging chamber using the sample introduction syringe. Wash the chamber with two 5-mL flushes of reagent water.

10.9 After desorbing the sample for 1.5 min, recondition the trap by returning the purge and trap system to the purge mode. Wait 15 s then close the syringe valve on the purging device to begin gas flow through the trap. The trap temperature should be maintained at 210 °C. After approximately 7 min, turn off the trap heater and open the syringe valve to stop the gas flow through the trap. When the trap is cool, the next sample can be analyzed.

10.10 Identify the parameters in the sample by comparing the retention times of the peaks in the sample chromatogram with those of the peaks in standard chromatograms. The width of the retention time window used to make identifications should be based upon measurements of actual retention time variations of standards over the course of a day. Three times the standard deviation of a retention time for a compound can be used to calculate a suggested window size; however, the experience of the analyst should weigh heavily in the interpretation of chromatograms.

11. Calculations

11.1 Determine the concentration of individual compounds in the sample.

11.1.1 If the external standard calibration procedure is used, calculate the concentration of the parameter being measured from the peak response using the calibration curve or calibration factor determined in Section 7.3.2.

11.1.2 If the internal standard calibration procedure is used, calculate the concentration in the sample using the response factor (RF) determined in Section 7.4.3 and Equation 2.

$$\text{Concentration } (\mu g/L) = \frac{(A_s)(C_{is})}{(A_{is})(RF)}$$

Equation 2

where:

A_s = Response for the parameter to be measured.

A_{is} = Response for the internal standard.

C_{is} = Concentration of the internal standard.

11.2 Report results in µg/L without correction for recovery data. All QC data obtained should be reported with the sample results.

12. Method Performance

12.1 The method detection limit (MDL) is defined as the minimum concentration of a substance that can be measured and reported with 99% confidence that the value is above zero.[1] The MDL concentrations listed in Table 1 were obtained using reagent water.[9]

The MDL actually achieved in a given analysis will vary depending on instrument sensitivity and matrix effects.

12.2 This method is recommended for the concentration range from the MDL to 1,000 × MDL. Direct aqueous injection techniques should be used to measure concentration levels above 1,000 × MDL.

12.3 In a single laboratory (Battelle-Columbus), the average recoveries and standard deviations presented in Table 2 were obtained.[9] Seven replicate samples were analyzed at each spike level.

References

1. 40 CFR part 136, appendix B.
2. Bellar, T.A., and Lichtenberg, J.J. ''Determining Volatile Organics at Microgram-per-Litre-Levels by Gas Chromatography,'' *Journal American Water Works Association, 66,* 739 (1974).
3. ''Evaluate Test Procedures for Acrolein and Acrylonitrile,'' Special letter report for EPA Project 4719–A, U.S. Environmental Protection Agency, Environmental Monitoring and Support Laboratory, Cincinnati, Ohio 45268, 27 June 1979.
4. ''Carcinogens—Working With Carcinogens,'' Department of Health, Education, and Welfare, Public Health Service, Center for Disease Control, National Institute for Occupational Safety and Health, Publication No. 77–206, August 1977.
5. ''OSHA Safety and Health Standards, General Industry,'' (29 CFR part 1910), Occupational Safety and Health Administration, OSHA 2206 (Revised, January 1976).
6. ''Safety in Academic Chemistry Laboratories,'' American Chemical Society Publication, Committee on Chemical Safety, 3rd Edition, 1979.
7. Provost, L.P., and Elder, R.S. ''Interpretation of Percent Recovery Data,'' *American Laboratory, 15,* 58–63 (1983).
8. ''Methods 330.4 (Titrimetric, DPD-FAS) and 330.5 (Spectrophotometric, DPD) for Chlorine, Total Residual,'' Methods for Chemical Analysis of Water and Wastes, EPA–600/4–79–020, U.S. Environmental Protection Agency, Environmental Monitoring and Support Laboratory, Cincinnati, Ohio 45268, March 1979.
9. ''Evaluation of Method 603 (Modified),'' EPA–600/4–84–ABC, National Technical Information Service, PB84–, Springfield, Virginia 22161, Nov. 1984.

TABLE 1—CHROMATOGRAPHIC CONDITIONS AND METHOD DETECTION LIMITS

Parameter	Retention time (min)		Method detection limit (µg/L)
	Column 1	Column 2	
Acrolein	10.6	8.2	0.7
Acrylonitrile	12.7	9.8	0.5

Column 1 conditions: Porapak-QS (80/100 mesh) packed in a 10 ft × 2 mm ID glass or stainless steel column with helium carrier gas at 30 mL/min flow rate. Column temperature held isothermal at 110 °C for 1.5 min (during desorption), then heated as rapidly as possible to 150 °C and held for 20 min; column bakeout at 190 °C for 10 min.[9]

Column 2 conditions: Chromosorb 101 (60/80 mesh) packed in a 6 ft. × 0.1 in. ID glass or stainless steel column with helium carrier gas at 40 mL/min flow rate. Column temperature held isothermal at 80 °C for 4 min, then programmed at 50 °C/min to 120 °C and held for 12 min.

TABLE 2—SINGLE LABORATORY ACCURACY AND PRECISION—METHOD 603

Parameter	Sample matrix	Spike conc. (µg/L)	Average recovery (µg/L)	Standard deviation (µg/L)	Average percent recovery
Acrolein	RW	5.0	5.2	0.2	104
	RW	50.0	51.4	0.7	103
	POTW	5.0	4.0	0.2	80
	POTW	50.0	44.4	0.8	89
	IW	5.0	0.1	0.1	2
	IW	100.0	9.3	1.1	9
Acrylonitrile	RW	5.0	4.2	0.2	84
	RW	50.0	51.4	1.5	103
	POTW	20.0	20.1	0.8	100
	POTW	100.0	101.3	1.5	101
	IW	10.0	9.1	0.8	91
	IW	100.0	104.0	3.2	104

RW = Reagent water.
POTW = Prechlorination secondary effluent from a municipal sewage treatment plant.
IW = Industrial wastewater containing an unidentified acrolein reactant.

TABLE 3—CALIBRATION AND QC ACCEPTANCE CRITERIA—METHOD 603[A]

Parameter	Range for Q (µg/L)	Limit for S (µg/L)	Range for X (µg/L)	Range for P, P_s (%)
Acrolein	45.9–54.1	4.6	42.9–60.1	88–118

TABLE 3—CALIBRATION AND QC ACCEPTANCE CRITERIA—METHOD 603 [A]—Continued

Parameter	Range for Q (µg/L)	Limit for S (µg/L)	Range for X (µg/L)	Range for P, P_s (%)
Acrylonitrile	41.2–58.8	9.9	33.1–69.9	71–135

[a] = Criteria were calculated assuming a QC check sample concentration of 50 µg/L.[9]
Q = Concentration measured in QC check sample, in µg/L (Section 7.5.3).
s = Standard deviation of four recovery measurements, in µg/L (Section 8.2.4).
X = Average recovery for four recovery measurements, in µg/L (Section 8.2.4).
P, P_s = Percent recovery measured (Section 8.3.2, Section 8.4.2).

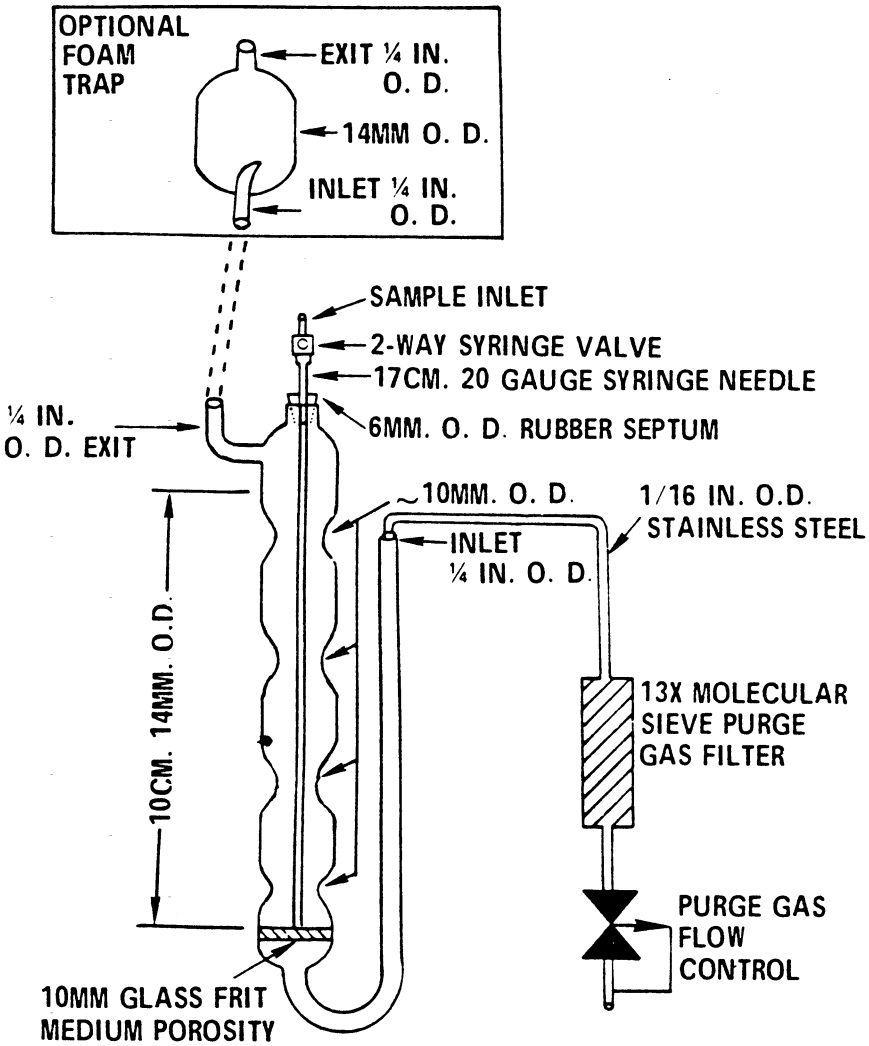

Figure 1. Purging device.

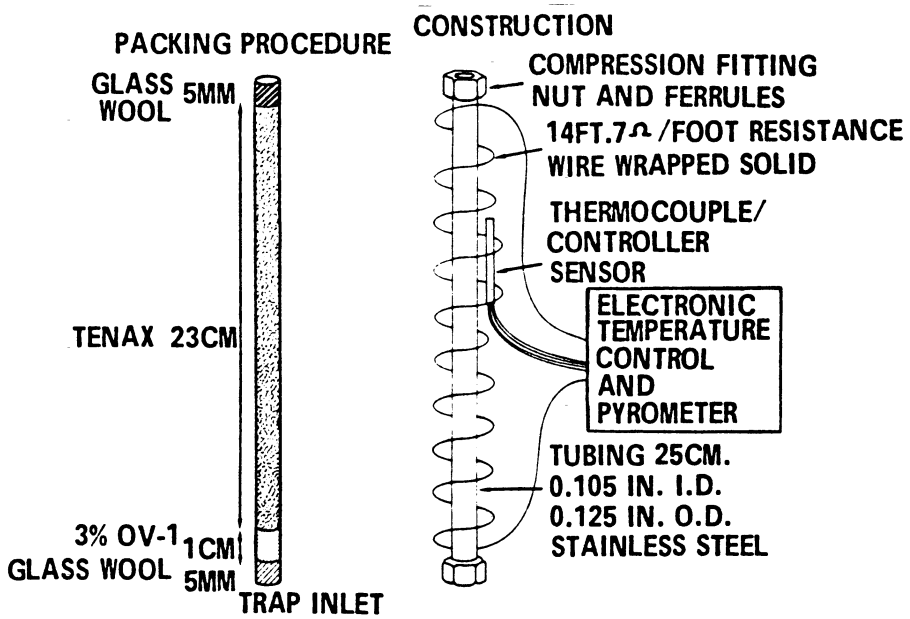

Figure 2. Trap packings and construction to include desorb capability.

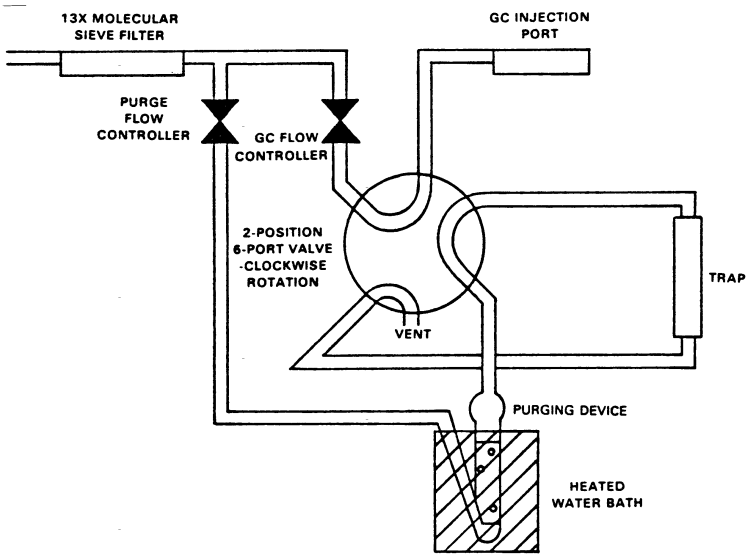

Figure 3. Purge and trap system-purge mode.

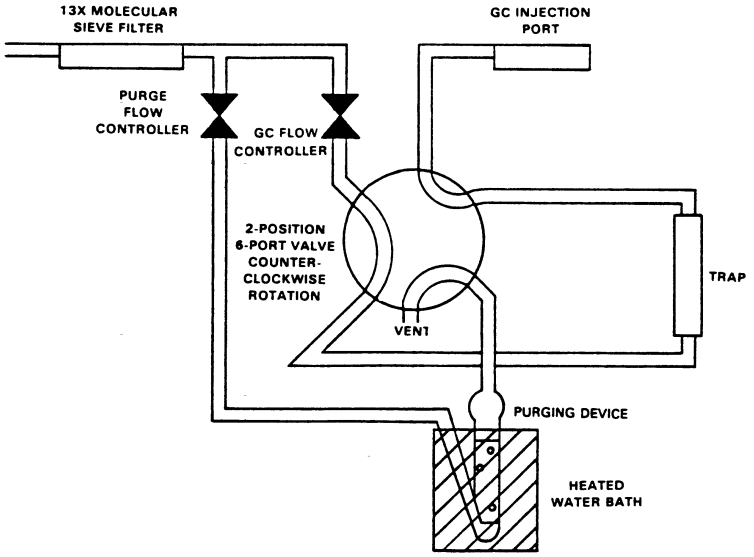

Figure 4. Purge and trap system-desorb mode.

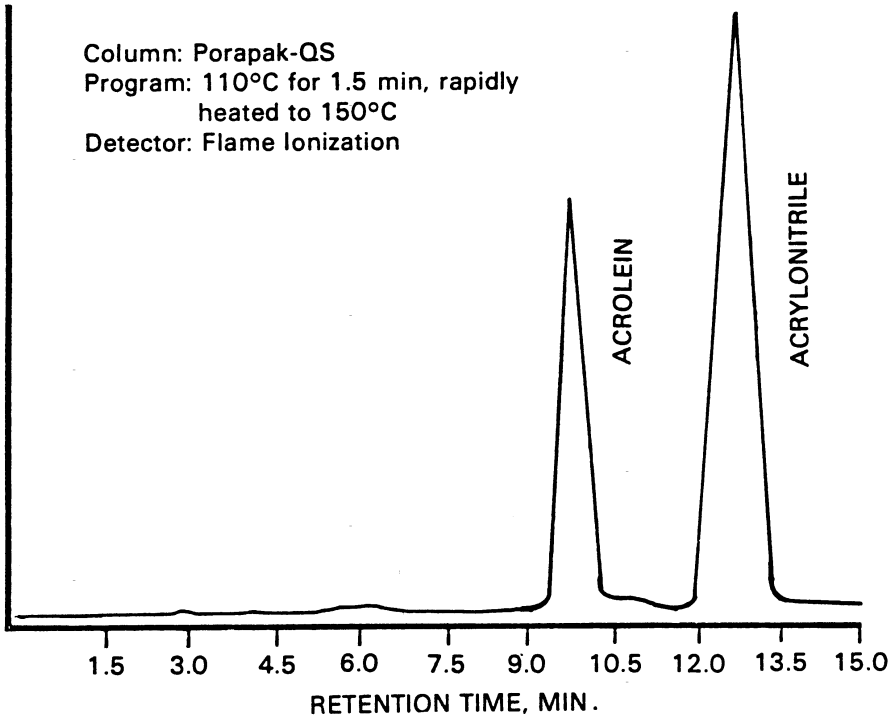

Figure 5. Gas chromatogram of acrolein and acrylonitrile.

METHOD 604—PHENOLS

1. Scope and Application

1.1 This method covers the determination of phenol and certain substituted phenols. The following parameters may be determined by this method:

Parameter	STORET No.	CAS No.
4-Chloro-3-methylphenol	34452	59–50–7
2—Chlorophenol	34586	95–57–8
2,4-Dichlorophenol	34601	120–83–2
2,4-Dimethylphenol	34606	105–67–9
2,4-Dinitrophenol	34616	51–28–5
2-Methyl-4,6-dinitrophenol	34657	534–52–1
2-Nitrophenol	34591	88–75–5
4-Nitrophenol	34646	100–02–7
Pentachlorophenol	39032	87–86–5
Phenol	34694	108–95–2
2,4,6-Trichlorophenol	34621	88–06–2

1.2 This is a flame ionization detector gas chromatographic (FIDGC) method applicable to the determination of the compounds listed above in municipal and industrial discharges as provided under 40 CFR 136.1. When this method is used to analyze unfamiliar samples for any or all of the compounds above, compound identifications should be supported by at least one additional qualitative technique. This method describes analytical conditions for derivatization, cleanup, and electron capture detector gas chromatography (ECDGC) that can be used to confirm measurements made by FIDGC. Method 625 provides gas chromatograph/mass spectrometer (GC/MS) conditions appropriate for the qualitative and quantitative confirmation of results for all of the parameters listed above, using the extract produced by this method.

1.3 The method detection limit (MDL, defined in Section 14.1)[1] for each parameter is listed in Table 1. The MDL for a specific wastewater may differ from those listed, depending upon the nature of interferences in the sample matrix. The MDL listed in Table 1 for each parameter was achieved with a flame ionization detector (FID). The MDLs that were achieved when the derivatization cleanup and electron capture detector (ECD) were employed are presented in Table 2.

1.4 Any modification of this method, beyond those expressly permitted, shall be considered as a major modification subject to application and approval of alternate test procedures under 40 CFR 136.4 and 136.5.

1.5 This method is restricted to use by or under the supervision of analysts experienced in the use of a gas chromatograph and in the interpretation of gas chromatograms. Each analyst must demonstrate the ability to generate acceptable results with this method using the procedure described in Section 8.2.

2. Summary of Method

2.1 A measured volume of sample, approximately 1-L, is acidified and extracted with methylene chloride using a separatory funnel. The methylene chloride extract is dried and exchanged to 2-propanol during concentration to a volume of 10 mL or less. The extract is separated by gas chromatography and the phenols are then measured with an FID.[2]

2.2 A preliminary sample wash under basic conditions can be employed for samples having high general organic and organic base interferences.

2.3 The method also provides for a derivatization and column chromatography cleanup procedure to aid in the elimination of interferences.[2 3] The derivatives are analyzed by ECDGC.

3. Interferences

3.1 Method interferences may be caused by contaminants in solvents, reagents, glassware, and other sample processing hardware that lead to discrete artifacts and/or elevated baselines in gas chromatograms. All of these materials must be routinely demonstrated to be free from interferences under the conditions of the analysis by running laboratory reagent blanks as described in Section 8.1.3.

3.1.1 Glassware must be scrupulously cleaned.[4] Clean all glassware as soon as possible after use by rinsing with the last solvent used in it. Solvent rinsing should be followed by detergent washing with hot water, and rinses with tap water and distilled water. The glassware should then be drained dry, and heated in a muffle furnace at 400 °C for 15 to 30 min. Some thermally stable materials, such as PCBs, may not be eliminated by this treatment. Solvent rinses with acetone and pesticide quality hexane may be substituted for the muffle furnace heating. Thorough rinsing with such solvents usually eliminates PCB interference. Volumetric ware should not be heated in a muffle furnace. After drying and cooling, glassware should be sealed and stored in a clean environment to prevent any accumulation of dust or other contaminants. Store inverted or capped with aluminum foil.

3.1.2 The use of high purity reagents and solvents helps to minimize interference problems. Purification of solvents by distillation in all-glass systems may be required.

3.2 Matrix interferences may be caused by contaminants that are coextracted from the sample. The extent of matrix interferences will vary considerably from source to source, depending upon the nature and diversity of the industrial complex or municipality being sampled. The derivatization cleanup procedure in Section 12 can be used to overcome many of these interferences, but unique samples may require additional cleanup approaches to achieve the MDL listed in Tables 1 and 2.

3.3 The basic sample wash (Section 10.2) may cause significantly reduced recovery of phenol and 2,4-dimethylphenol. The analyst must recognize that results obtained under these conditions are minimum concentrations.

4. Safety

4.1 The toxicity or carcinogenicity of each reagent used in this mothod has not been precisely defined; however, each chemical compound should be treated as a potential health hazard. From this viewpoint, exposure to these chemicals must be reduced to the lowest possible level by whatever means available. The laboratory is responsible for maintaining a current awareness file of OSHA regulations regarding the safe handling of the chemicals specified in this method. A reference file of material data handling sheets should also be made available to all personnel involved in the chemical analysis. Additional references to laboratory safety are available and have been identified[5 7] for the information of analyst.

4.2 Special care should be taken in handling pentafluorobenzyl bromide, which is a lachrymator, and 18-crown-6-ether, which is highly toxic.

5. Apparatus and Materials

5.1 Sampling equipment, for discrete or composite sampling.

5.1.1 Grab sample bottle—1–L or 1-qt, amber glass, fitted with a screw cap lined with Teflon. Foil may be substituted for Teflon if the sample is not corrosive. If amber bottles are not available, protect samples from light. The bottle and cap liner must be washed, rinsed with acetone or methylene chloride, and dried before use to minimize contamination.

5.1.2 Automatic sampler (optional)—The sampler must incorporate glass sample containers for the collection of a minimum of 250 mL of sample. Sample containers must be kept refrigerated at 4 °C and protected from light during compositing. If the sampler uses a peristaltic pump, a minimum length of compressible silicone rubber tubing may be

used. Before use, however, the compressible tubing should be thoroughly rinsed with methanol, followed by repeated rinsings with distilled water to minimize the potential for contamination of the sample. An integrating flow meter is required to collect flow proportional composites.

5.2 Glassware (All specifications are suggested. Catalog numbers are included for illustration only.):

5.2.1 Separatory funnel—2–L, with Teflon stopcock.

5.2.2 Drying column—Chromatographic column, 400 mm long × 19 mm ID, with coarse frit filter disc.

5.2.3 Chromatographic column—100 mm long × 10 mm ID, with Teflon stopcock.

5.2.4 Concentrator tube, Kuderna-Danish—10-mL, graduated (Kontes K–570050–1025 or equivalent). Calibration must be checked at the volumes employed in the test. Ground glass stopper is used to prevent evaporation of extracts.

5.2.5 Evaporative flask, Kuderna-Danish—500-mL (Kontes K–570001–0500 or equivalent). Attach to concentrator tube with springs.

5.2.6 Snyder column, Kuderna-Danish—Three-ball macro (Kontes K–503000–0121 or equivalent).

5.2.7 Snyder column, Kuderna-Danish—Two-ball micro (Kontes K–569001–0219 or equivalent).

5.2.8 Vials—10 to 15-mL, amber glass, with Teflon-lined screw cap.

5.2.9 Reaction flask—15 to 25-mL round bottom flask, with standard tapered joint, fitted with a water-cooled condenser and U-shaped drying tube containing granular calcium chloride.

5.3 Boiling chips—Approximately 10/40 mesh. Heat to 400 °C for 30 min or Soxhlet extract with methylene chloride.

5.4 Water bath—Heated, with concentric ring cover, capable of temperature control (±2 °C). The bath should be used in a hood.

5.5 Balance—Analytical, capable of accurately weighting 0.0001 g.

5.6 Gas chromatograph—An analytical system complete with a temperature programmable gas chromatograph suitable for on-column injection and all required accessories including syringes, analytical columns, gases, detector, and strip-chart recorder. A data system is recommended for measuring peak areas.

5.6.1 Column for underivatized phenols—1.8 m long × 2 mm ID glass, packed with 1% SP–1240DA on Supelcoport (80/100 mesh) or equivalent. This column was used to develop the method performance statements in Section 14. Guidelines for the use of alternate column packings are provided in Section 11.1.

5.6.2 Column for derivatized phenols—1.8 m long × 2 mm ID glass, packed with 5% OV–17 on Chromosorb W-AW-DMCS (80/100 mesh) or equivalent. This column has proven effective in the analysis of wastewaters for derivatization products of the parameters listed in the scope (Section 1.1), and was used to develop the method performance statements in Section 14. Guidelines for the use of alternate column packings are provided in Section 11.1.

5.6.3 Detectors—Flame ionization and electron capture detectors. The FID is used when determining the parent phenols. The ECD is used when determining the derivatized phenols. Guidelines for the use of alternatve detectors are provided in Section 11.1.

6. Reagents

6.1 Reagent water—Reagent water is defined as a water in which an interferent is not observed at the MDL of the parameters of interest.

6.2 Sodium hydroxide solution (10 N)—Dissolve 40 g of NaOH (ACS) in reagent water and dilute to 100 mL.

6.3 Sodium hydroxide solution (1 N)—Dissolve 4 g of NaOH (ACS) in reagent water and dilute to 100 mL.

6.4 Sodium sulfate—(ACS) Granular, anhydrous. Purify by heating at 400 °C for 4 h in a shallow tray.

6.5 Sodium thiosulfate—(ACS) Granular.

6.6 Sulfuric acid (1 + 1)—Slowly, add 50 mL of H_2SO_4 (ACS, sp. gr. 1.84) to 50 mL of reagent water.

6.7 Sulfuric acid (1 N)—Slowly, add 58 mL of H_2SO_4 (ACS, sp. gr. 1.84) to reagent water and dilute to 1 L.

6.8 Potassium carbonate—(ACS) Powdered.

6.9 Pentafluorobenzyl bromide (α-Bromopentafluorotoluene)—97% minimum purity.

NOTE: This chemical is a lachrymator. (See Section 4.2.)

6.10 18-crown-6-ether (1,4,7,10,13,16-Hexaoxacyclooctadecane)—98% minimum purity.

NOTE: This chemical is highly toxic.

6.11 Derivatization reagent—Add 1 mL of pentafluorobenzyl bromide and 1 g of 18-crown-6-ether to a 50-mL volumetric flask and dilute to volume with 2-propanol. Prepare fresh weekly. This operation should be carried out in a hood. Store at 4 °C and protect from light.

6.12 Acetone, hexane, methanol, methylene chloride, 2-propanol, toluene—Pesticide quality or equivalent.

6.13 Silica gel—100/200 mesh, Davison, grade-923 or equivalent. Activate at 130 °C overnight and store in a desiccator.

6.14 Stock standard solutions (1.00 μg/μL)—Stock standard solutions may be prepared from pure standard materials or purchased as certified solutions.

6.14.1 Prepare stock standard solutions by accurately weighing about 0.0100 g of pure material. Dissolve the material in 2-propanol

and dilute to volume in a 10-mL volumetric flask. Larger volumes can be used at the convenience of the analyst. When compound purity is assayed to be 96% or greater, the weight can be used without correction to calculate the concentration of the stock standard. Commercially prepared stock standards can be used at any concentration if they are certified by the manufacturer or by an independent source.

6.14.2 Transfer the stock standard solutions into Teflon-sealed screw-cap bottles. Store at 4 °C and protect from light. Stock standard solutions should be checked frequently for signs of degradation or evaporation, especially just prior to preparing calibration standards from them.

6.14.3 Stock standard solutions must be replaced after six months, or sooner if comparison with check standards indicates a problem.

6.15 Quality control check sample concentrate—See Section 8.2.1.

7. Calibration

7.1 To calibrate the FIDGC for the anaylsis of underivatized phenols, establish gas chromatographic operating conditions equivalent to those given in Table 1. The gas chromatographic system can be calibrated using the external standard technique (Section 7.2) or the internal standard technique (Section 7.3).

7.2 External standard calibration procedure for FIDGC:

7.2.1 Prepare calibration standards at a minimum of three concentration levels for each parameter of interest by adding volumes of one or more stock standards to a volumetric flask and diluting to volume with 2-propanol. One of the external standards should be at a concentration near, but above, the MDL (Table 1) and the other concentrations should correspond to the expected range of concentrations found in real samples or should define the working range of the detector.

7.2.2 Using injections of 2 to 5 µl, analyze each calibration standard according to Section 11 and tabulate peak height or area responses against the mass injected. The results can be used to prepare a calibration curve for each compound. Alternatively, if the ratio of response to amount injected (calibration factor) is a constant over the working range (<10% relative standard deviation, RSD), linearity through the origin can be assumed and the average ratio or calibration factor can be used in place of a calibration curve.

7.3 Internal standard calibration procedure for FIDGC—To use this approach, the analyst must select one or more internal standards that are similar in analytical behavior to the compounds of interest. The analyst must further demonstrate that the measurement of the internal standard is not affected by method or matrix interferences. Because of these limitations, no internal standard can be suggested that is applicable to all samples.

7.3.1 Prepare calibration standards at a minimum of three concentration levels for each parameter of interest by adding volumes of one or more stock standards to a volumetric flask. To each calibration standard, add a known constant amount of one or more internal standards, and dilute to volume with 2-propanol. One of the standards should be at a concentration near, but above, the MDL and the other concentrations should correspond to the expected range of concentrations found in real samples or should define the working range of the detector.

7.3.2 Using injections of 2 to 5 µL, analyze each calibration standard according to Section 11 and tabulate peak height or area responses against concentration for each compound and internal standard. Calculate response factors (RF) for each compound using Equation 1.

$$RF = (A_s)(C_{is}\ (A_{is})(C_s)$$

Equation 1

where:

A_s = Response for the parameter to be measured.

A_{is} = Response for the internal standard.

C_{is} = Concentration of the internal standard (µg/L).

C_s = Concentration of the parameter to be measured (µg/L).

If the RF value over the working range is a constant (<10% RSD), the RF can be assumed to be invariant and the average RF can be used for calculations. Alternatively, the results can be used to plot a calibration curve of response ratios, A_s/A_{is}, vs. RF.

7.4 The working calibration curve, calibration factor, or RF must be verified on each working day by the measurement of one or more calibration standards. If the response for any parameter varies from the predicted response by more than ±15%, a new calibration curve must be prepared for that compound.

7.5 To calibrate the ECDGC for the analysis of phenol derivatives, establish gas chromatographic operating conditions equivalent to those given in Table 2.

7.5.1 Prepare calibration standards at a minimum of three concentration levels for each parameter of interest by adding volumes of one or more stock standards to a volumetric flask and diluting to volume with 2-propanol. One of the external standards should be at a concentration near, but above, the MDL (Table 2) and the other concentrations should correspond to the expected range of concentrations found in real samples or should define the working range of the detector.

7.5.2 Each time samples are to be derivatized, simultaneously treat a 1-mL aliquot of each calibration standard as described in Section 12.

7.5.3 After derivatization, analyze 2 to 5 µL of each column eluate collected according to the method beginning in Section 12.8 and tabulate peak height or area responses against the calculated equivalent mass of underivatized phenol injected. The results can be used to prepare a calibration curve for each compound.

7.6 Before using any cleanup procedure, the analyst must process a series of calibration standards through the procedure to validate elution patterns and the absence of interferences from the reagents.

8. Quality Control

8.1 Each laboratory that uses this method is required to operate a formal quality control program. The minimum requirements of this program consist of an initial demonstration of laboratory capability and an ongoing analysis of spiked samples to evaluate and document data quality. The laboratory must maintain records to document the quality of data that is generated. Ongoing data quality checks are compared with established performance criteria to determine if the results of analyses meet the performance characteristics of the method. When results of sample spikes indicate atypical method performance, a quality control check standard must be analyzed to confirm that the measurements were performed in an in-control mode of operation.

8.1.1 The analyst must make an initial, one-time, demonstration of the ability to generate acceptable accuracy and precision with this method. This ability is established as described in Section 8.2.

8.1.2 In recognition of advances that are occurring in chromatography, the analyst is permitted certain options (detailed in Sections 10.6 and 11.1) to improve the separations or lower the cost of measurements. Each time such a modification is made to the method, the analyst is required to repeat the procedure in Section 8.2.

8.1.3 Before processing any samples the analyst must analyze a reagent water blank to demonstrate that interferences from the analytical system and glassware are under control. Each time a set of samples is extracted or reagents are changed a reagent water blank must be processed as a safeguard against laboratory contamination.

8.1.4 The laboratory must, on an ongoing basis, spike and analyze a minimum of 10% of all samples to monitor and evaluate laboratory data quality. This procedure is described in Section 8.3.

8.1.5 The laboratory must, on an ongoing basis, demonstrate through the analyses of quality control check standards that the operation of the measurement system is in control. This procedure is described in Section 8.4. The frequency of the check standard analyses is equivalent to 10% of all samples analyzed but may be reduced if spike recoveries from samples (Section 8.3) meet all specified quality control criteria.

8.1.6 The laboratory must maintain performance records to document the quality of data that is generated. This procedure is described in Section 8.5.

8.2 To establish the ability to generate acceptable accuracy and precision, the analyst must perform the following operations.

8.2.1 A quality control (QC) check sample concentrate is required containing each parameter of interest at a concentration of 100 µg/mL in 2-propanol. The QC check sample concentrate must be obtained from the U.S. Environmental Protection Agency, Environmental Monitoring and Support Laboratory in Cincinnati, Ohio, if available. If not available from that source, the QC check sample concentrate must be obtained from another external source. If not available from either source above, the QC check sample concentrate must be prepared by the laboratory using stock standards prepared independently from those used for calibration.

8.2.2 Using a pipet, prepare QC check samples at a concentration of 100 µg/L by adding 1.00 mL of QC check sample concentrate to each of four 1-L aliquots of reagent water.

8.2.3 Analyze the well-mixed QC check samples according to the method beginning in Section 10.

8.2.4 Calculate the average recovery ($\bar{X}$) in µg/L, and the standard deviation of the recovery (s) in µg/L, for each parameter using the four results.

8.2.5 For each parameter compare s and $\bar{X}$ with the corresponding acceptance criteria for precision and accuracy, respectively, found in Table 3. If s and $\bar{X}$ for all parameters of interest meet the acceptance criteria, the system performance is acceptable and analysis of actual samples can begin. If any individual s exceeds the precision limit or any individual $\bar{X}$ falls outside the range for accuracy, the system performance is unacceptable for that parameter.

NOTE: The large number of parameters in Talbe 3 present a substantial probability that one or more will fail at least one of the acceptance criteria when all parameters are analyzed.

8.2.6 When one or more of the parameters tested fail at least one of the acceptance criteria, the analyst must proceed according to Section 8.2.6.1 or 8.2.6.2.

8.2.6.1 Locate and correct the source of the problem and repeat the test for all parameters of interest beginning with Section 8.2.2.

8.2.6.2 Beginning with Section 8.2.2, repeat the test only for those parameters that failed to meet criteria. Repeated failure, however, will confirm a general problem

with the measurement system. If this occurs, locate and correct the source of the problem and repeat the test for all compounds of interest beginning with Section 8.2.2.

8.3 The laboratory must, on an ongoing basis, spike at least 10% of the samples from each sample site being monitored to assess accuracy. For laboratories analyzing one to ten samples per month, at least one spiked sample per month is required.

8.3.1 The concentration of the spike in the sample should be determined as follows:

8.3.1.1 If, as in compliance monitoring, the concentration of a specific parameter in the sample is being checked against a regulatory concentration limit, the spike should be at that limit or 1 to 5 times higher than the background concentration determined in Section 8.3.2, whichever concentration would be larger.

8.3.1.2 If the concentration of a specific parameter in the sample is not being checked against a limit specific to that parameter, the spike should be at 100 µg/L or 1 to 5 times higher than the background concentration determined in Section 8.3.2, whichever concentration would be larger.

8.3.1.3 If it is impractical to determine background levels before spiking (e.g., maximum holding times will be exceeded), the spike concentration should be (1) the regulatory concentration limit, if any, or, if none, (2) the larger of either 5 times higher than the expected background concentration or 100 µg/L.

8.3.2 Analyze one sample aliquot to determine the background concentration (B) of each parameter. If necessary, prepare a new QC check sample concentrate (Section 8.2.1) appropriate for the background concentrations in the sample. Spike a second sample aliquot with 1.0 mL of the QC check sample concentrate and analyze it to determine the concentration after spiking (A) of each parameter. Calculate each percent recovery (P) as $100(A-B)\%/T$, where T is the known true value of the spike.

8.3.3 Compare the percent recovery (P) for each parameter with the corresponding QC acceptance criteria found in Table 3. These acceptance criteria were calculated to include an allowance for error in measurement of both the background and spike concentrations, assuming a spike to background ratio of 5:1. This error will be accounted for to the extent that the analyst's spike to background ratio approaches 5:1.[8] If spiking was performed at a concentration lower than 100 µg/L, the analyst must use either the QC acceptance criteria in Table 3, or optional QC acceptance criteria calculated for the specific spike concentration. To calculate optional acceptance criteria for the recovery of a parameter: (1) Calculate accuracy (X′) using the equation in Table 4, substituting the spike concentration (T) for C; (2) calculate overall precision (S′) using the equation in Table 4, substituting X′ for $\bar{X}$; (3) calculate the range for recovery at the spike concentration as $(100\ X'/T)\pm 2.44(100\ S'/T)\%$.[8]

8.3.4 If any individual P falls outside the designated range for recovery, that parameter has failed the acceptance criteria. A check standard containing each parameter that failed the criteria must be analyzed as described in Section 8.4.

8.4 If any parameter fails the acceptance criteria for recovery in Section 8.3, a QC check standard containing each parameter that failed must be prepared and analyzed.

NOTE: The frequency for the required analysis of a QC check standard will depend upon the number of parameters being simultaneously tested, the complexity of the sample matrix, and the performance of the laboratory.

8.4.1 Prepare the QC check standard by adding 1.0 mL of QC check sample concentrate (Section 8.2.1 or 8.3.2) to 1 L of reagent water. The QC check standard needs only to contain the parameters that failed criteria in the test in Section 8.3.

8.4.2 Analyze the QC check standard to determine the concentration measured (A) of each parameter. Calculate each percent recovery (P_s) as $100\ (A/T)\%$, where T is the true value of the standard concentration.

8.4.3 Compare the percent recovery (P_s) for each parameter with the corresponding QC acceptance criteria found in Table 3. Only parameters that failed the test in Section 8.3 need to be compared with these criteria. If the recovery of any such parameter falls outside the designated range, the laboratory performance for that parameter is judged to be out of control, and the problem must be immediately identified and corrected. The analytical result for that parameter in the unspiked sample is suspect and may not be reported for regulatory compliance purposes.

8.5 As part of the QC program for the laboratory, method accuracy for wastewater samples must be assessed and records must be maintained. After the analysis of five spiked wastewater samples as in Section 8.3, calculate the average percent recovery ($\bar{P}$) and the standard deviation of the percent recovery (s_p). Express the accuracy assessment as a percent recovery interval from $\bar{P}-2s_p$ to $\bar{P}+2s_p$. If $\bar{P}=90\%$ and $s_p=10\%$, for example, the accuracy interval is expressed as 70–110%. Update the accuracy assessment for each parameter on a regular basis (e.g. after each five to ten new accuracy measurements).

8.6. It is recommended that the laboratory adopt additional quality assurance practices for use with this method. The specific practices that are most productive depend upon the needs of the laboratory and the nature of the samples. Field duplicates may be analyzed to assess the precision of the environmental measurements. When

doubt exists over the identification of a peak on the chromatogram, confirmatory techniques such as gas chromatography with a dissimilar column, specific element detector, or mass spectrometer must be used. Whenever possible, the laboratory should analyze standard reference materials and participate in relevant performance evaluation studies.

9. Sample Collection, Preservation, and Handling

9.1 Grab samples must be collected in glass containers. Conventional sampling practices[9] should be followed, except that the bottle must not be prerinsed with sample before collection. Composite samples should be collected in refrigerated glass containers in accordance with the requirements of the program. Automatic sampling equipment must be as free as possible of Tygon tubing and other potential sources of contamination.

9.2 All samples must be iced or refrigerated at 4 °C from the time of collection until extraction. Fill the sample bottles and, if residual chlorine is present, add 80 mg of sodium thiosulfate per liter of sample and mix well. EPA Methods 330.4 and 330.5 may be used for measurement of residual chlorine.[10] Field test kits are available for this purpose.

9.3 All samples must be extracted within 7 days of collection and completely analyzed within 40 days of extraction.[2]

10. Sample Extraction

10.1 Mark the water meniscus on the side of sample bottle for later determination of sample volume. Pour the entire sample into a 2-L separatory funnel.

10.2 For samples high in organic content, the analyst may solvent wash the sample at basic pH as prescribed in Sections 10.2.1 and 10.2.2 to remove potential method interferences. Prolonged or exhaustive contact with solvent during the wash may result in low recovery of some of the phenols, notably phenol and 2,4-dimethylphenol. For relatively clean samples, the wash should be omitted and the extraction, beginning with Section 10.3, should be followed.

10.2.1 Adjust the pH of the sample to 12.0 or greater with sodium hydroxide solution.

10.2.2 Add 60 mL of methylene chloride to the sample by shaking the funnel for 1 min with periodic venting to release excess pressure. Discard the solvent layer. The wash can be repeated up to two additional times if significant color is being removed.

10.3 Adjust the sample to a pH of 1 to 2 with sulfuric acid.

10.4 Add 60 mL of methylene chloride to the sample bottle, seal, and shake 30 s to rinse the inner surface. Transfer the solvent to the separatory funnel and extract the sample by shaking the funnel for 2 min. with periodic venting to release excess pressure. Allow the organic layer to separate from the water phase for a minimum of 10 min. If the emulsion interface between layers is more than one-third the volume of the solvent layer, the analyst must employ mechanical techniques to complete the phase separation. The optimum technique depends upon the sample, but may include stirring, filtration of the emulsion through glass wool, centrifugation, or other physical methods. Collect the methylene chloride extract in a 250-mL Erlenmeyer flask.

10.5 Add a second 60-mL volume of methylene chloride to the sample bottle and repeat the extraction procedure a second time, combining the extracts in the Erlenmeyer flask. Perform a third extraction in the same manner.

10.6 Assemble a Kuderna-Danish (K-D) concentrator by attaching a 10-mL concentrator tube to a 500-mL evaporative flask. Other concentration devices or techniques may be used in place of the K-D concentrator if the requirements of Section 8.2 are met.

10.7 Pour the combined extract through a solvent-rinsed drying column containing about 10 cm of anhydrous sodium sulfate, and collect the extract in the K-D concentrator. Rinse the Erlenmeyer flask and column with 20 to 30 mL of methylene chloride to complete the quantitative transfer.

10.8 Add one or two clean boiling chips to the evaporative flask and attach a three-ball Snyder column. Prewet the Snyder column by adding about 1 mL of methylene chloride to the top. Place the K-D apparatus on a hot water bath (60 to 65 °C) so that the concentrator tube is partially immersed in the hot water, and the entire lower rounded surface of the flask is bathed with hot vapor. Adjust the vertical position of the apparatus and the water temperature as required to complete the concentration in 15 to 20 min. At the proper rate of distillation the balls of the column will actively chatter but the chambers will not flood with condensed solvent. When the apparent volume of liquid reaches 1 mL, remove the K-D apparatus and allow it to drain and cool for at least 10 min.

10.9 Increase the temperature of the hot water bath to 95 to 100 °C. Remove the Synder column and rinse the flask and its lower joint into the concentrator tube with 1 to 2 mL of 2-propanol. A 5-mL syringe is recommended for this operation. Attach a two-ball micro-Snyder column to the concentrator tube and prewet the column by adding about 0.5 mL of 2-propanol to the top. Place the micro-K-D apparatus on the water bath so that the concentrator tube is partially immersed in the hot water. Adjust the vertical position of the apparatus and the water temperature as required to complete concentration in 5 to 10 min. At the proper rate of distillation the balls of the column will actively chatter but the chambers will

not flood. When the apparent volume of liquid reaches 2.5 mL, remove the K-D apparatus and allow it to drain and cool for at least 10 min. Add an additional 2 mL of 2-propanol through the top of the micro-Snyder column and resume concentrating as before. When the apparent volume of liquid reaches 0.5 mL, remove the K-D apparatus and allow it to drain and cool for at least 10 min.

10.10 Remove the micro-Snyder column and rinse its lower joint into the concentrator tube with a minimum amount of 2-propanol. Adjust the extract volume to 1.0 mL. Stopper the concentrator tube and store refrigerated at 4 °C if further processing will not be performed immediately. If the extract will be stored longer than two days, it should be transferred to a Teflon-sealed screw-cap vial. If the sample extract requires no further cleanup, proceed with FIDGC analysis (Section 11). If the sample requires further cleanup, proceed to Section 12.

10.11 Determine the original sample volume by refilling the sample bottle to the mark and transferring the liquid to a 1000-mL graduated cylinder. Record the sample volume to the nearest 5 mL.

11. Flame Ionization Detector Gas Chromatography

11.1 Table 1 summarizes the recommended operating conditions for the gas chromatograph. Included in this table are retention times and MDL that can be achieved under these conditions. An example of the separations achieved by this column is shown in Figure 1. Other packed or capillary (open-tubular) columns, chromatographic conditions, or detectors may be used if the requirements of Section 8.2 are met.

11.2 Calibrate the system daily as described in Section 7.

11.3 If the internal standard calibration procedure is used, the internal standard must be added to the sample extract and mixed thoroughly immediately before injection into the gas chromatograph.

11.4 Inject 2 to 5 µL of the sample extract or standard into the gas chromatograph using the solvent-flush technique.[11] Smaller (1.0 µL) volumes may be injected if automatic devices are employed. Record the volume injected to the nearest 0.05 µL, and the resulting peak size in area or peak height units.

11.5 Identify the parameters in the sample by comparing the retention times of the peaks in the sample chromatogram with those of the peaks in standard chromatograms. The width of the retention time window used to make identifications should be based upon measurements of actual retention time variations of standards over the course of a day. Three times the standard deviation of a retention time for a compound may be used to calculate a suggested window size; however, the experience of the analyst should weigh heavily in the interpretation of chromatograms.

11.6 If the response for a peak exceeds the working range of the system, dilute the extract and reanalyze.

11.7 If the measurement of the peak response is prevented by the presence of interferences, an alternative gas chromatographic procedure is required. Section 12 describes a derivatization and column chromatographic procedure which has been tested and found to be a practical means of analyzing phenols in complex extracts.

12. Derivatization and Electron Capture Detector Gas Chromatography

12.1 Pipet a 1.0-mL aliquot of the 2-propanol solution of standard or sample extract into a glass reaction vial. Add 1.0 mL of derivatizing reagent (Section 6.11). This amount of reagent is sufficient to derivatize a solution whose total phenolic content does not exceed 0.3 mg/mL.

12.2 Add about 3 mg of potassium carbonate to the solution and shake gently.

12.3 Cap the mixture and heat it for 4 h at 80 °C in a hot water bath.

12.4 Remove the solution from the hot water bath and allow it to cool.

12.5 Add 10 mL of hexane to the reaction flask and shake vigorously for 1 min. Add 3.0 mL of distilled, deionized water to the reaction flask and shake for 2 min. Decant a portion of the organic layer into a concentrator tube and cap with a glass stopper.

12.6 Place 4.0 g of silica gel into a chromatographic column. Tap the column to settle the silica gel and add about 2 g of anhydrous sodium sulfate to the top.

12.7 Preelute the column with 6 mL of hexane. Discard the eluate and just prior to exposure of the sodium sulfate layer to the air, pipet onto the column 2.0 mL of the hexane solution (Section 12.5) that contains the derivatized sample or standard. Elute the column with 10.0 mL of hexane and discard the eluate. Elute the column, in order, with: 10.0 mL of 15% toluene in hexane (Fraction 1); 10.0 mL of 40% toluene in hexane (Fraction 2); 10.0 mL of 75% toluene in hexane (Fraction 3); and 10.0 mL of 15% 2-propanol in toluene (Fraction 4). All elution mixtures are prepared on a volume: volume basis. Elution patterns for the phenolic derivatives are shown in Table 2. Fractions may be combined as desired, depending upon the specific phenols of interest or level of interferences.

12.8 Analyze the fractions by ECDGC. Table 2 summarizes the recommended operating conditions for the gas chromatograph. Included in this table are retention times and MDL that can be achieved under these conditions. An example of the separations achieved by this column is shown in Figure 2.

12.9 Calibrate the system daily with a minimum of three aliquots of calibration standards, containing each of the phenols of interest that are derivatized according to Section 7.5.

12.10 Inject 2 to 5 μL of the column fractions into the gas chromatograph using the solvent-flush technique. Smaller (1.0 μL) volumes can be injected if automatic devices are employed. Record the volume injected to the nearest 0.05 μL, and the resulting peak size in area or peak height units. If the peak response exceeds the linear range of the system, dilute the extract and reanalyze.

13. Calculations

13.1 Determine the concentration of individual compounds in the sample analyzed by FIDGC (without derivatization) as indicated below.

13.1.1 If the external standard calibration procedure is used, calculate the amount of material injected from the peak response using the calibration curve or calibration factor determined in Section 7.2.2. The concentration in the sample can be calculated from Equation 2.

$$\text{Concentration } (\mu g/L) = \frac{(A)(V_t)}{(V_i)(V_s)}$$

Equation 2

where:
A = Amount of material injected (ng).
V_i = Volume of extract injected (μL).
V_t = Volume of total extract (μL).
V_s = Volume of water extracted (mL).

13.1.2 If the internal standard calibration procedure is used, calculate the concentration in the sample using the response factor (RF) determined in Section 7.3.2 and Equation 3.

$$\text{Concentration } (\mu g/L) = \frac{(A_s)(I_s)}{(A_{is})(RF)(V_o)}$$

Equation 3

where:
A_s = Response for the parameter to be measured.
A_{is} = Response for the internal standard.
I_s = Amount of internal standard added to each extract (μg).
V_o = Volume of water extracted (L).

13.2 Determine the concentration of individual compounds in the sample analyzed by derivatization and ECDGC according to Equation 4.

$$\text{Concentration } (\mu g/L) = \frac{(A)(V_t)(B)(D)}{(V_i)(V_s)(C)(E)}$$

Equation 4

where:
A = Mass of underivatized phenol represented by area of peak in sample chromatogram, determined from calibration curve in Section 7.5.3 (ng).
V_i = Volume of eluate injected (μL).
V_t = Total volume of column eluate or combined fractions from which V_i was taken (μL).
V_s = Volume of water extracted in Section 10.10 (mL).
B = Total volume of hexane added in Section 12.5 (mL).
C = Volume of hexane sample solution added to cleanup column in Section 12.7 (mL).
D = Total volume of 2-propanol extract prior to derivatization (mL).
E = Volume of 2-propanol extract carried through derivatization in Section 12.1 (mL).

13.3 Report results in μg/L without correction for recovery data. All QC data obtained should be reported with the sample results.

14. Method Performance

14.1 The method detection limit (MDL) is defined as the minimum concentration of a substance that can be measured and reported with 99% confidence that the value is above zero.[1] The MDL concentrations listed in Tables 1 and 2 were obtained using reagent water.[12] Similar results were achieved using representative wastewaters. The MDL actually achieved in a given analysis will vary depending on instrument sensitivity and matrix effects.

14.2 This method was tested by 20 laboratories using reagent water, drinking water, surface water, and three industrial wastewaters spiked as six concentrations over the range 12 to 450 μg/L.[13] Single operator precision, overall precision, and method accuracy were found to be directly related to the concentration of the parameter and essentially independent of the sample matrix. Linear equations to describe these relationships for a flame ionization detector are presented in Table 4.

References

1. 40 CFR part 136, appendix B.
2. ''Determination of Phenols in Industrial and Municipal Wastewaters,'' EPA 600/4–84–ABC, National Technical Information Service, PBXYZ, Springfield, Virginia 22161, November 1984.
3. Kawahara, F. K. ''Microdetermination of Derivatives of Phenols and Mercaptans by Means of Electron Capture Gas Chromatography,'' *Analytical Chemistry, 40,* 1009 (1968).
4. ASTM Annual Book of Standards, Part 31, D3694–78. ''Standard Practices for Preparation of Sample Containers and for Preservation of Organic Constituents,'' American

Society for Testing and Materials, Philadelphia.

5. ''Carcinogens—Working With Carcinogens,'' Department of Health, Education, and Welfare, Public Health Service, Center for Disease Control, National Institute for Occupational Safety and Health, Publication No. 77–206, August 1977.

6. ''OSHA Safety and Health Standards, General Industry,'' (29 CFR part 1910), Occupational Safety and Health Administration, OSHA 2206 (Revised, January 1976).

7. ''Safety in Academic Chemistry Laboratories,'' American Chemical Society Publication, Committee on Chemical Safety, 3rd Edition, 1979.

8. Provost, L. P., and Elder, R. S. ''Interpretation of Percent Recovery Data,'' *American Laboratory, 15,* 58–63 (1983). (The value 2.44 used in the equation in Section 8.3.3 is two times the value 1.22 derived in this report.)

9. ASTM Annual Book of Standards, Part 31, D3370–76. ''Standard Practices for Sampling Water,'' American Society for Testing and Materials, Philadelphia.

10. ''Methods 330.4 (Titrimetric, DPD-FAS) and 330.5 (Spectrophotometric, DPD) for Chlorine, Total Residual,'' Methmds for Chemical Analysis of Water and Wastes, EPA–600/4–79–020, U.S. Environmental Protection Agency, Environmental Monitoring and Support Laboratory, Cincinnati, Ohio 45268, March 1979.

11. Burke, J. A. ''Gas Chromatography for Pesticide Residue Analysis; Some Practical Aspects,'' *Journal of the Association of Official Analytical Chemists, 48,* 1037 (1965).

12. ''Development of Detection Limits, EPA Method 604, Phenols,'' Special letter report for EPA Contract 68–03–2625, U.S. Environmental Protection Agency, Environmental Monitoring and Support Laboratory, Cincinnati, Ohio 45268.

13. ''EPA Method Study 14 Method 604-Phenols,'' EPA 600/4–84–044, National Technical Information Service, PB84–196211, Springfield, Virginia 22161, May 1984.

TABLE 1—CHROMATOGRAPHIC CONDITIONS AND METHOD DETECTION LIMITS

Parameter	Retention time (min)	Method detection limit (μg/L)
2-Chlorophenol	1.70	0.31
2-Nitrophenol	2.00	0.45
Phenol	3.01	0.14
2,4-Dimethylphenol	4.03	0.32
2,4-Dichlorophenol	4.30	0.39
2,4,6-Trichlorophenol	6.05	0.64
4-Chloro-3-methylphenol	7.50	0.36
2,4-Dinitrophenol	10.00	13.0
2-Methyl-4,6-dinitrophenol	10.24	16.0
Pentachlorophenol	12.42	7.4
4-Nitrophenol	24.25	2.8

Column conditions: Supelcoport (80/100 mesh) coated with 1% SP–1240DA packed in a 1.8 m long × 2 mm ID glass column with nitrogen carrier gas at 30 mL/min flow rate. Column temperature was 80 °C at injection, programmed immediately at 8 °C/min to 150 °C final temperature. MDL were determined with an FID.

TABLE 2—SILICA GEL FRACTIONATION AND ELECTRON CAPTURE GAS CHROMATOGRAPHY OF PFBB DERIVATIVES

Parent compound	Percent recovery by fraction [a]				Retention time (min)	Method detection limit (μg/L)
	1	2	3	4		
2-Chlorophenol	.....	90	1	.....	3.3	0.58
2-Nitrophenol	.....	.....	9	90	9.1	0.77
Phenol	.....	90	10	.....	1.8	2.2
2,4-Dimethylphenol	.....	95	7	.....	2.9	0.63
2,4-Dichlorophenol	.....	95	1	.....	5.8	0.68
2,4,6-Trichlorophenol	50	50	.....	.....	7.0	0.58
4-Chloro-3-methylphenol	.....	84	14	.....	4.8	1.8
Pentachlorophenol	75	20	.....	.....	28.8	0.59
4-Nitrophenol	.....	.....	1	90	14.0	0.70

Column conditions: Chromosorb W-AW-DMCS (80/100 mesh) coated with 5% OV–17 packed in a 1.8 m long × 2.0 mm ID glass column with 5% methane/95% argon carrier gas at 30 mL/min flow rate. Column temperature held isothermal at 200 °C. MDL were determined with an ECD.

[a] Eluant composition:
Fraction 1—15% toluene in hexane.
Fraction 2—40% toluene in hexane.
Fraction 3—75% toluene in hexane.
Fraction 4—15% 2-propanol in toluene.

TABLE 3—QC ACCEPTANCE CRITERIA—METHOD 604

Parameter	Test conc. (μg/L)	Limit for s (μg/L)	Range for $\bar{X}$ (μg/L)	Range for P, P_s (percent)
4-Chloro-3-methylphenol	100	16.6	56.7–113.4	49–122
2-Chlorophenol	100	27.0	54.1–110.2	38–126
2,4-Dichlorophenol	100	25.1	59.7–103.3	44–119
2,4-Dimethylphenol	100	33.3	50.4–100.0	24–118
4,6-Dinitro-2-methylphenol	100	25.0	42.4–123.6	30–136
2,4-Dinitrophenol	100	36.0	31.7–125.1	12–145
2-Nitrophenol	100	22.5	56.6–103.8	43–117
4-Nitrophenol	100	19.0	22.7–100.0	13–110
Pentachlorophenol	100	32.4	56.7–113.5	36–134
Phenol	100	14.1	32.4–100.0	23–108
2,4,6-Trichlorophenol	100	16.6	60.8–110.4	53–119

s—Standard deviation of four recovery measurements, in μg/L (Section 8.2.4).
$\bar{X}$—Average recovery for four recovery measurements, in μg/L (Section 8.2.4).
P, P_s—Percent recovery measured (Section 8.3.2, Section 8.4.2).

NOTE: These criteria are based directly upon the method performance data in Table 4. Where necessary, the limits for recovery have been broadened to assure applicability of the limits to concentrations below those used to develop Table 4.

TABLE 4—METHOD ACCURACY AND PRECISION AS FUNCTIONS OF CONCENTRATION—METHOD 604

Parameter	Accuracy, as recovery, X' (μg/L)	Single Analyst precision, s_r' (μg/L)	Overall precision, S' (μg/L)
4-Chloro-3-methylphenol	0.87C–1.97	$0.11\bar{X}$–0.21	$0.16\bar{X}$ + 1.41
2-Chlorophenol	0.83C–0.84	$0.18\bar{X}$ + 0.20	$0.21\bar{X}$ + 0.75
2,4-Dichlorophenol	0.81C + 0.48	$0.17\bar{X}$–0.02	$0.18\bar{X}$ + 0.62
2,4-Dimethylphenol	0.62C–1.64	$0.30\bar{X}$–0.89	$0.25\bar{X}$ + 0.48
4,6-Dinitro-2-methylphenol	0.84C–1.01	$0.15\bar{X}$ + 1.25	$0.19\bar{X}$ + 5.85
2,4-Dinitrophenol	0.80C–1.58	$0.27\bar{X}$–1.15	$0.29\bar{X}$ + 4.51
2-Nitrophenol	0.81C–0.76	$0.15\bar{X}$ + 0.44	$0.14\bar{X}$ + 3.84
4-Nitrophenol	0.46C + 0.18	$0.17\bar{X}$ + 2.43	$0.19\bar{X}$ + 4.79
Pentachlorophenol	0.83C + 2.07	$0.22\bar{X}$–0.58	$0.23\bar{X}$ + 0.57
Phenol	0.43C + 0.11	$0.20\bar{X}$–0.88	$0.17\bar{X}$ + 0.77
2,4,6-Trichlorophenol	0.86C–0.40	$0.10\bar{X}$ + 0.53	$0.13\bar{X}$ + 2.40

X' = Expected recovery for one or more measurements of a sample containing a concentration of C, in μg/L.
s_r' = Expected single analyst standard deviation of measurements at an average concentration found of $\bar{X}$, in μg/L.
S' = Expected interlaboratory standard deviation of measurements at an average concentration found of $\bar{X}$, in μg/L.
C = True value for the concentration, in μg/L.
$\bar{X}$ = Average recovery found for measurements of samples containing a concentration of C, in μg/L.

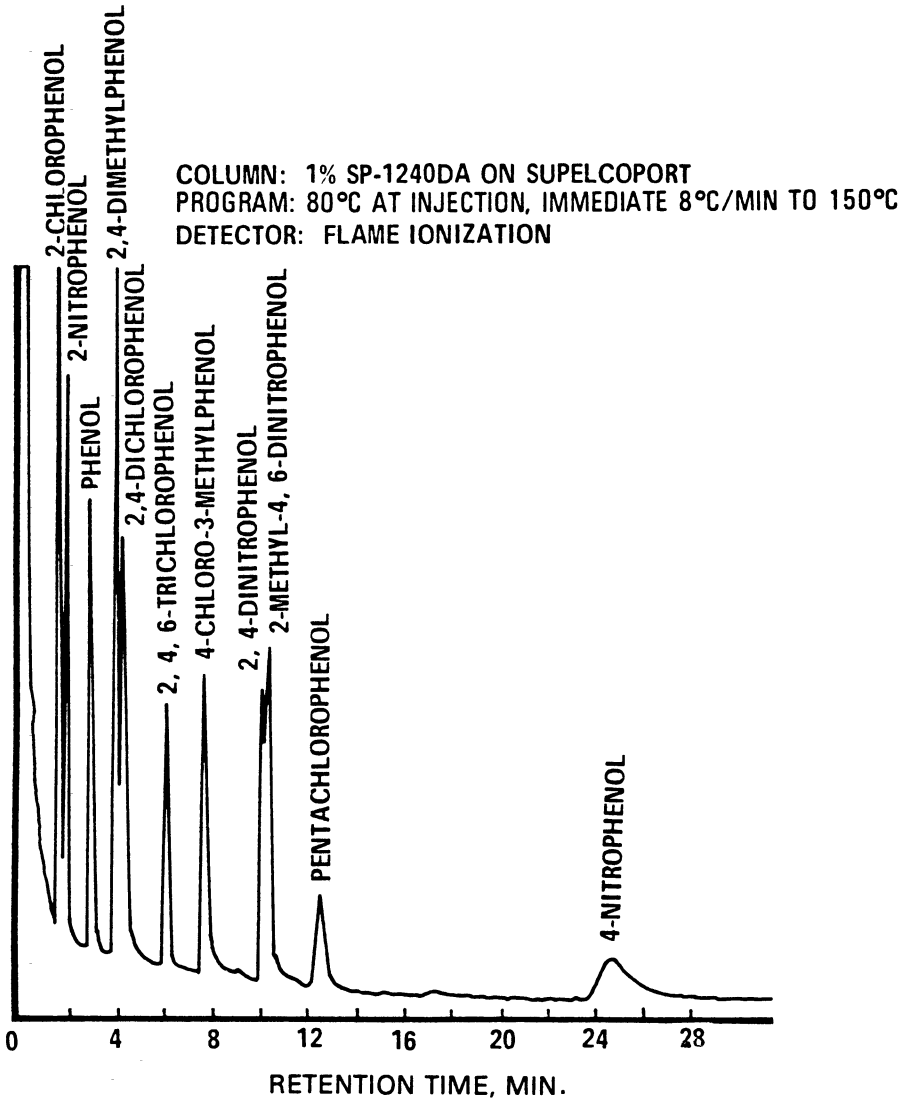

Figure 1. Gas chromatogram of phenols.

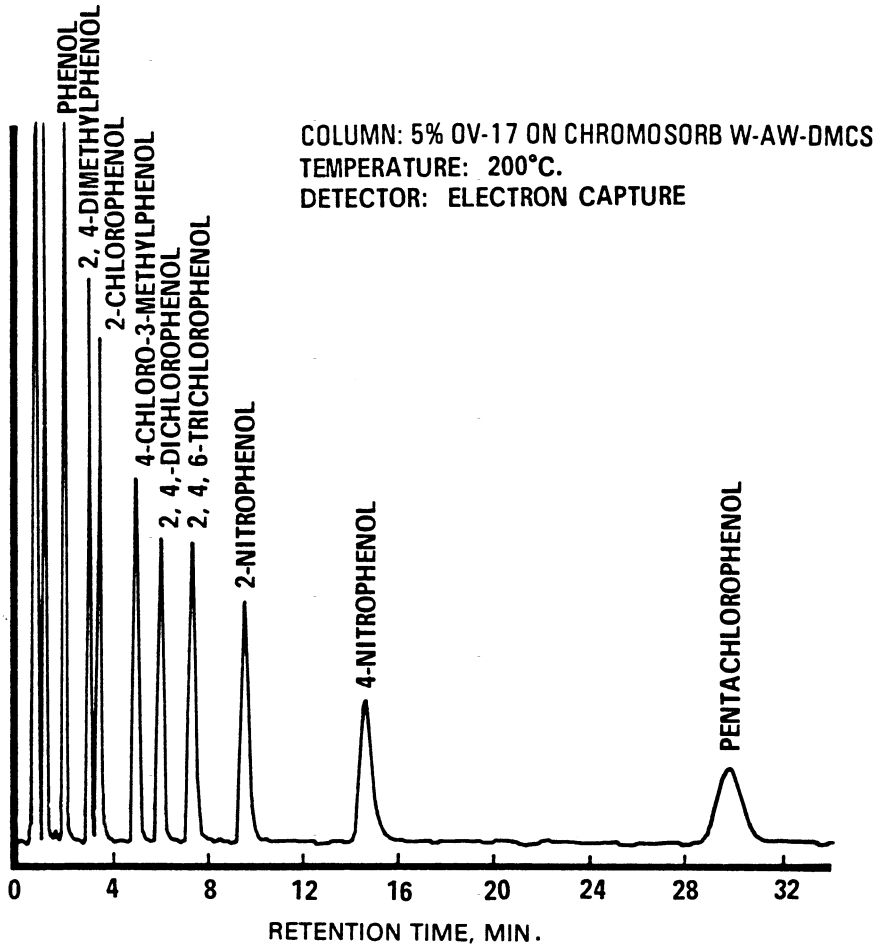

Figure 2. Gas chromatogram of PFB derivatives of phenols.

METHOD 605—BENZIDINES

1. Scope and Application

1.1 This method covers the determination of certain benzidines. The following parameters can be determined by this method:

Parameter	Storet No	CAS No.
Benzidine	39120	92–87–5
3,3′-Dichlorobenzidine	34631	91–94–1

1.2 This is a high performance liquid chromatography (HPLC) method applicable to the determination of the compounds listed above in municipal and industrial discharges as provided under 40 CFR 136.1. When this method is used to analyze unfamiliar samples for the compounds above, identifications should be supported by at least one additional qualitative technique. This method describes electrochemical conditions at a second potential which can be used to confirm measurements made with this method. Method 625 provides gas chromatograph/mass spectrometer (GC/MS) conditions appropriate for the qualitative and quantitative confirmation of results for the parameters listed above, using the extract produced by this method.

1.3 The method detection limit (MDL, defined in Section 14.1)[1] for each parameter is

listed in Table 1. The MDL for a specific wastewater may differ from those listed, depending upon the nature of the interferences in the sample matrix.

1.4 Any modification of this method, beyond those expressly permitted, shall be considered as a major modification subject to application and approval of alternate test procedures under 40 CFR 136.4 and 136.5.

1.5 This method is restricted to use by or under the supervision of analysts experienced in the use of HPLC instrumentation and in the interpretation of liquid chromatograms. Each analyst must demonstrate the ability to generate acceptable results with this method using the procedure described in Section 8.2.

2. Summary of Method

2.1 A measured volume of sample, approximately 1–L, is extracted with chloroform using liquid-liquid extractions in a separatory funnel. The chloroform extract is extracted with acid. The acid extract is then neutralized and extracted with chloroform. The final chloroform extract is exchanged to methanol while being concentrated using a rotary evaporator. The extract is mixed with buffer and separated by HPLC. The benzidine compounds are measured with an electrochemical detector.[2]

2.2 The acid back-extraction acts as a general purpose cleanup to aid in the elimination of interferences.

3. Interferences

3.1 Method interferences may be caused by contaminants in solvents, reagents, glassware, and other sample processing hardware that lead to discrete artifacts and/or elevated baselines in chromatograms. All of these materials must be routinely demonstrated to be free from interferences under the conditions of the analysis by running laboratory reagent blanks as described in Section 8.1.3.

3.1.1 Glassware must be scrupulously cleaned.[3] Clean all glassware as soon as possible after use by rinsing with the last solvent used in it. Solvent rinsing should be followed by detergent washing with hot water, and rinses with tap water and distilled water. The glassware should then be drained dry, and heated in a muffle furnace at 400 °C for 15 to 30 min. Some thermally stable materials may not be eliminated by this treatment. Solvent rinses with acetone and pesticide quality hexane may be substituted for the muffle furnace heating. Volumetric ware should not be heated in a muffle furnace. After drying and cooling, glassware should be sealed and stored in a clean environment to prevent any accumulation of dust or other contaminants. Store inverted or capped with aluminum foil.

3.1.2 The use of high purity reagents and solvents helps to minimize interference problems. Purification of solvents by distillation in all-glass systems may be required.

3.2 Matrix interferences may be caused by contaminants that are co-extracted from the sample. The extent of matrix interferences will vary considerably from source to source, depending upon the nature and diversity of the industrial complex or municipality being sampled. The cleanup procedures that are inherent in the extraction step are used to overcome many of these interferences, but unique samples may require additional cleanup approaches to achieve the MDL listed in Table 1.

3.3 Some dye plant effluents contain large amounts of components with retention times closed to benzidine. In these cases, it has been found useful to reduce the electrode potential in order to eliminate interferences and still detect benzidine. (See Section 12.7.)

4. Safety

4.1 The toxicity or carcinogenicity of each reagent used in this method has not been precisely defined; however, each chemical compound should be treated as a potential health harzard. From this viewpoint, exposure to these chemicals must be reduced to the lowest possible level by whatever means available. The laboratory is responsible for maintaining a current awareness file of OSHA regulations regarding the safe handling of the chemicals specified in this method. A reference file of material data handling sheets should also be made available to all personnel involved in the chemical analysis. Additional references to laboratory safety are available and have been identified[4 6] for the information of the analyst.

4.2 The following parameters covered by this method have been tentatively classified as known or suspected, human or mammalian carcinogens: benzidine and 3,3′-dichlorobenzidine. Primary standards of these toxic compounds should be prepared in a hood. A NIOSH/MESA approved toxic gas respirator should be worn when the analyst handles high concentrations of these toxic compounds.

4.3 Exposure to chloroform should be minimized by performing all extractions and extract concentrations in a hood or other well-ventiliated area.

5. Apparatus and Materials

5.1 Sampling equipment, for discrete or composite sampling.

5.1.1 Grab sample bottle—1–L or 1-qt, amber glass, fitted with a screw cap lined with Teflon. Foil may be substituted for Teflon if the sample is not corrosive. If amber bottles are not available, protect samples from light. The bottle and cap liner must be washed, rinsed with acetone or methylene

chloride, and dried before use to minimize contamination.

5.1.2 Automatic sampler (optional)—The sampler must incorporate glass sample containers for the collection of a minimum of 250 mL of sample. Sample containers must be kept refrigerated at 4 °C and protected from light during compositing. If the sampler uses a peristaltic pump, a minimum length of compressible silicone rubber tubing may be used. Before use, however, the compressible tubing should be thoroughly rinsed with methanol, followed by repeated rinsings with distilled water to minimize the potential for contamination of the sample. An integrating flow meter is required to collect flow proportional composites.

5.2 Glassware (All specifications are suggested):

5.2.1 Separatory funnels—2000, 1000, and 250-mL, with Teflon stopcock.

5.2.2 Vials—10 to 15-mL, amber glass, with Teflon-lined screw cap.

5.2.3 Rotary evaporator.

5.2.4 Flasks—Round bottom, 100–mL, with 24/40 joints.

5.2.5 Centrifuge tubes—Conical, graduated, with Teflon-lined screw caps.

5.2.6 Pipettes—Pasteur, with bulbs.

5.3 Balance—Analytical, capable of accurately weighing 0.0001 g.

5.4 High performance liquid chromatograph (HPLC)—An analytical system complete with column supplies, high pressure syringes, detector, and compatible recorder. A data system is recommended for measuring peak areas and retention times.

5.4.1 Solvent delivery system—With pulse damper, Altex 110A or equivalent.

5.4.2 Injection valve (optional)—Waters U6K or equivalent.

5.4.3 Electrochemical detector—Bioanalytical Systems LC–2A with glassy carbon electrode, or equivalent. This detector has proven effective in the analysis of wastewaters for the parameters listed in the scope (Section 1.1), and was used to develop the method performance statements in Section 14. Guidelines for the use of alternate detectors are provided in Section 12.1.

5.4.4 Electrode polishing kit—Princeton Applied Research Model 9320 or equivalent.

5.4.5 Column—Lichrosorb RP–2, 5 micron particle diameter, in a 25 cm × 4.6 mm ID stainless steel column. This column was used to develop the method performance statements in Section 14. Guidelines for the use of alternate column packings are provided in Section 12.1.

6. Reagents

6.1 Reagent water—Reagent water is defined as a water in which an interferent is not observed at the MDL of the parameters of interest.

6.2 Sodium hydroxide solution (5 N)—Dissolve 20 g of NaOH (ACS) in reagent water and dilute to 100 mL.

6.3 Sodium hydroxide solution (1 M)—Dissolve 40 g of NaOH (ACS) in reagent water and dilute to 1 L.

6.4 Sodium thiosulfate—(ACS) Granular.

6.5 Sodium tribasic phosphate (0.4 M)—Dissolve 160 g of trisodium phosphate decahydrate (ACS) in reagent water and dilute to 1 L.

6.6 Sulfuric acid (1 + 1)—Slowly, add 50 mL of H_2SO_4 (ACS, sp. gr. 1.84) to 50 mL of reagent water.

6.7 Sulfuric acid (1 M)—Slowly, add 58 mL of H_2SO_4 (ACS, sp. gr. 1.84) to reagent water and dilute to 1 L.

6.8 Acetate buffer (0.1 M, pH 4.7)—Dissolve 5.8 mL of glacial acetic acid (ACS) and 13.6 g of sodium acetate trihydrate (ACS) in reagent water which has been purified by filtration through a RO–4 Millipore System or equivalent and dilute to 1 L.

6.9 Acetonitrile, chloroform (preserved with 1% ethanol), methanol—Pesticide quality or equivalent.

6.10 Mobile phase—Place equal volumes of filtered acetonitrile (Millipore type FH filter or equivalent) and filtered acetate buffer (Millipore type GS filter or equivalent) in a narrow-mouth, glass container and mix thoroughly. Prepare fresh weekly. Degas daily by sonicating under vacuum, by heating and stirring, or by purging with helium.

6.11 Stock standard solutions (1.00 μg/μL)—Stock standard solutions may be prepared from pure standard materials or purchased as certified solutions.

6.11.1 Prepare stock standard solutions by accurately weighing about 0.0100 g of pure material. Dissolve the material in methanol and dilute to volume in a 10–mL volumetric flask. Larger volumes can be used at the convenience of the analyst. When compound purity is assayed to be 96% or greater, the weight can be used without correction to calculate the concentration of the stock standard. Commercially prepared stock standards can be used at any concentration if they are certified by the manufacturer or by an independent source.

6.11.2 Transfer the stock standard solutions into Teflon-sealed screw-cap bottles. Store at 4 °C and protect from light. Stock standard solutions should be checked frequently for signs of degradation or evaporation, especially just prior to preparing calibration standards from them.

6.11.3 Stock standard solutions must be replaced after six months, or sooner if comparison with check standards indicates a problem.

6.12 Quality control check sample concentrate—See Section 8.2.1.

7. Calibration

7.1 Establish chromatographic operating conditions equivalent to those given in Table 1. The HPLC system can be calibrated using the external standard technique (Section 7.2) or the internal standard technique (Section 7.3).

7.2 External standard calibration procedure:

7.2.1 Prepare calibration standards at a minimum of three concentration levels for each parameter of interest by adding volumes of one or more stock standards to a volumetric flask and diluting to volume with mobile phase. One of the external standards should be at a concentration near, but above, the MDL (Table 1) and the other concentrations should correspond to the expected range of concentrations found in real samples or should define the working range of the detector.

7.2.2 Using syringe injections of 5 to 25 µL or a constant volume injection loop, analyze each calibration standard according to Section 12 and tabulate peak height or area responses against the mass injected. The results can be used to prepare a calibration curve for each compound. Alternatively, if the ratio of response to amount injected (calibration factor) is a constant over the working range (<10% relative standard deviation, RSD), linearity through the origin can be assumed and the average ratio or calibration factor can be used in place of a calibration curve.

7.3 Internal standard calibration procedure—To use this approach, the analyst must select one or more internal standards that are similar in analytical behavior to the compounds of interest. The analyst must further demonstrate that the measurement of the internal standard is not affected by method or matrix interferences. Because of these limitations, no internal standard can be suggested that is applicable to all samples.

7.3.1 Prepare calibration standards at a minimum of three concentration levels for each parameter of interest by adding volumes of one or more stock standards to a volumetric flask. To each calibration standard, add a known constant amount of one or more internal standards, and dilute to volume with mobile phase. One of the standards should be at a concentration near, but above, the MDL and the other concentrations should correspond to the expected range of concentrations found in real samples or should define the working range of the detector.

7.3.2 Using syringe injections of 5 to 25 µL or a constant volume injection loop, analyze each calibration standard according to Section 12 and tabulate peak height or area responses against concentration for each compound and internal standard. Calculate response factors (RF) for each compound using Equation 1.

$$RF = (A_s)(C_{is}\ (A_{is})(C_s)$$

Equation 1

where:

A_s = Response for the parameter to be measured.

A_{is} = Response for the internal standard.

C_{is} = Concentration of the internal standard (µg/L).

C_s = Concentration of the parameter to be measured (µg/L).

If the RF value over the working range is a constant (<10% RSD), the RF can be assumed to be invariant and the average RF can be used for calculations. Alternatively, the results can be used to plot a calibration curve of response ratios, A_s/A_{is}, vs. RF.

7.4 The working calibration curve, calibration factor, or RF must be verified on each working day by the measurement of one or more calibration standards. If the response for any parameter varies from the predicted response by more than ±15%, a new calibration curve must be prepared for that compound. If serious loss of response occurs, polish the electrode and recalibrate.

7.5 Before using any cleanup procedure, the analyst must process a series of calibration standards through the procedure to validate elution patterns and the absence of interferences from the reagents.

8. Quality Control

8.1 Each laboratory that uses this method is required to operate a formal quality control program. The minimum requirements of this program consist of an initial demonstration of laboratory capability and an ongoing analysis of spiked samples to evaluate and document data quality. The laboratory must maintain records to document the quality of data that is generated. Ongoing data quality checks are compared with established performance criteria to determine if the results of analyses meet the performance characteristics of the method. When results of sample spikes indicate atypical method performance, a quality control check standard must be analyzed to confirm that the measurements were performed in an in-control mode of operation.

8.1.1 The analyst must make an initial, one-time, demonstration of the ability to generate acceptable accuracy and precision with this method. This ability is established as described in Section 8.2.

8.1.2 In recognition of advances that are occurring in chromatography, the analyst is permitted certain options (detailed in Sections 10.9, 11.1, and 12.1) to improve the separations or lower the cost of measurements. Each time such a modification is made to the method, the analyst is required to repeat the procedure in Section 8.2.

8.1.3 Before processing any samples, the analyst must analyze a reagent water blank to demonstrate that interferences from the analytical system and glassware are under control. Each time a set of samples is extracted or reagents are changed, a reagent water blank must be processed as a safeguard against laboratory contamination.

8.1.4 The laboratory must, on an ongoing basis, spike and analyze a minimum of 10% of all samples to monitor and evaluate laboratory data quality. This procedure is described in Section 8.3.

8.1.5 The laboratory must, on an ongoing basis, demonstrate through the analyses of quality control check standards that the operation of the measurement system is in control. This procedure is described in Section 8.4. The frequency of the check standard analyses is equivalent to 10% of all samples analyzed but may be reduced if spike recoveries from samples (Section 8.3) meet all specified quality control criteria.

8.1.6 The laboratory must maintain performance records to document the quality of data that is generated. This procedure is described in Section 8.5.

8.2 To establish the ability to generate acceptable accuracy and precision, the analyst must perform the following operations.

8.2.1 A quality control (QC) check sample concentrate is required containing benzidine and/or 3,3′-dichlorobenzidine at a concentration of 50 µg/mL each in methanol. The QC check sample concentrate must be obtained from the U.S. Environmental Protection Agency, Environmental Monitoring and Support Laboratory in Cincinnati, Ohio, if available. If not available from that source, the QC check sample concentrate must be obtained from another external source. If not available from either source above, the QC check sample concentrate must be prepared by the laboratory using stock standards prepared independently from those used for calibration.

8.2.2 Using a pipet, prepare QC check samples at a concentration of 50 µg/L by adding 1.00 mL of QC check sample concentrate to each of four 1–L-L aliquots of reagent water.

8.2.3 Analyze the well-mixed QC check samples according to the method beginning in Section 10.

8.2.4 Calculate the average recovery ($\bar{X}$) in µg/L, and the standard deviation of the recovery (s) in µg/L, for each parameter using the four results.

8.2.5 For each parameter compare s and $\bar{X}$ with the corresponding acceptance criteria for precision and accuracy, respectively, found in Table 2. If s and $\bar{X}$ for all parameters of interest meet the acceptance criteria, the system performance is acceptable and analysis of actual samples can begin. If any individual s exceeds the precision limit or any individual $\bar{X}$ falls outside the range for accuracy, the system performance is unacceptable for that parameter. Locate and correct the source of the problem and repeat the test for all parameters of interest beginning with Section 8.2.2.

8.3 The laboratory must, on an ongoing basis, spike at least 10% of the samples from each sample site being monitored to assess accuracy. For laboratories analyzing one to ten samples per month, at least one spiked sample per month is required.

8.3.1 The concentration of the spike in the sample should be determined as follows:

8.3.1.1 If, as in compliance monitoring, the concentration of a specific parameter in the sample is being checked against a regulatory concentration limit, the spike should be at that limit or 1 to 5 times higher than the background concentration determined in Section 8.3.2, whichever concentration would be larger.

8.3.1.2 If the concentration of a specific parameter in the sample is not being checked against a limit specific to that parameter, the spike should be at 50 µg/L or 1 to 5 times higher than the background concentration determined in Section 8.3.2, whichever concentration would be larger.

8.3.1.3 If it is impractical to determine background levels before spiking (e.g., maximum holding times will be exceeded), the spike concentration should be (1) the regulatory concentration limit, if any; or, if none (2) the larger of either 5 times higher than the expected background concentration or 50 µg/L.

8.3.2 Analyze one sample aliquot to determine the background concentration (B) of each parameter. If necessary, prepare a new QC check sample concentrate (Section 8.2.1) appropriate for the background concentrations in the sample. Spike a second sample aliquot with 1.0 mL of the QC check sample concentrate and analyze it to determine the concentration after spiking (A) of each parameter. Calculate each percent recovery (P) as $100(A-B)\%/T$, where T is the known true value of the spike.

8.3.3 Compare the percent recovery (P) for each parameter with the corresponding QC acceptance criteria found in Table 2. These acceptance criteria were calculated to include an allowance for error in measurement of both the background and spike concentrations, assuming a spike to background ratio of 5:1. This error will be accounted for to the extent that the analyst's spike to background ratio approaches 5:1.[7] If spiking was performed at a concentration lower than 50 µg/L, the analyst must use either the QC acceptance criteria in Table 2, or optional QC acceptance criteria calculated for the specific spike concentration. To calculate optional acceptance criteria for the recovery of a parameter: (1) Calculate accuracy (X′) using the equation in Table 3, substituting

the spike concentration (T) for C; (2) calculate overall precision (S′) using the equation in Table 3, substituting X′ for $\bar{X}$; (3) calculate the range for recovery at the spike concentration as (100 X′/T)±2.44(100 S′/T)%.[7]

8.3.4 If any individual P falls outside the designated range for recovery, that parameter has failed the acceptance criteria. A check standard containing each parameter that failed the criteria must be analyzed as described in Section 8.4.

8.4 If any parameter fails the acceptance criteria for recovery in Section 8.3, a QC check standard containing each parameter that failed must be prepared and analyzed.

NOTE: The frequency for the required analysis of a QC check standard will depend upon the number of parameters being simultaneously tested, the complexity of the sample matrix, and the performance of the laboratory.

8.4.1 Prepare the QC check standard by adding 1.0 mL of QC check sample concentrate (Sections 8.2.1 or 8.3.2) to 1 L of reagent water. The QC check standard needs only to contain the parameters that failed criteria in the test in Section 8.3.

8.4.2 Analyze the QC check standard to determine the concentration measured (A) of each parameter. Calculate each percent recovery (P_s) as 100 (A/T)%, where T is the true value of the standard concentration.

8.4.3 Compare the percent recovery (P_s) for each parameter with the corresponding QC acceptance criteria found in Table 2. Only parameters that failed the test in Section 8.3 need to be compared with these criteria. If the recovery of any such parameter falls outside the designated range, the laboratory performance for that parameter is judged to be out of control, and the problem must be immediately identified and corrected. The analytical result for that parameter in the unspiked sample is suspect and may not be reported for regulatory compliance purposes.

8.5 As part of the QC program for the laboratory, method accuracy for wastewater samples must be assessed and records must be maintained. After the analysis of five spiked wastewater samples as in Section 8.3, calculate the average percent recovery ($\bar{P}$) and the standard deviation of the percent recovery (s_p). Express the accuracy assessment as a percent recovery interval from $\bar{P} - 2s_p$ to $\bar{P} + 2s_p$. If $\bar{P}$ = 90% and s_p = 10%, for example, the accuracy interval is expressed as 70–110%. Update the accuracy assessment for each parameter on a regular basis (e.g. after each five to ten new accuracy measurements).

8.6 It is recommended that the laboratory adopt additional quality assurance practices for use with this method. The specific practices that are most productive depend upon the needs of the laboratory and the nature of the samples. Field duplicates may be analyzed to assess the precision of the environmental measurements. When doubt exists over the identification of a peak on the chromatogram, confirmatory techniques such as HPLC with a dissimilar column, gas chromatography, or mass spectrometer must be used. Whenever possible, the laboratory should analyze standard reference materials and participate in relevant performance evaluation studies.

9. Sample Collection, Preservation, and Handling

9.1 Grab samples must be collected in glass containers. Conventional sampling practices[8] should be followed, except that the bottle must not be prerinsed with sample before collection. Composite samples should be collected in refrigerated glass containers in accordance with the requirements of the program. Automatic sampling equipment must be as free as possible of Tygon tubing and other potential sources of contamination.

9.2 All samples must be iced or refrigerated at 4 °C and stored in the dark from the time of collection until extraction. Both benzidine and 3,3′-dichlorobenzidine are easily oxidized. Fill the sample bottles and, if residual chlorine is present, add 80 mg of sodium thiosulfate per liter of sample and mix well. EPA Methods 330.4 and 330.5 may be used for measurement of residual chlorine.[9] Field test kits are available for this purpose. After mixing, adjust the pH of the sample to a range of 2 to 7 with sulfuric acid.

9.3 If 1,2-diphenylhydrazine is likely to be present, adjust the pH of the sample to 4.0 ±0.2 to prevent rearrangement to benzidine.

9.4 All samples must be extracted within 7 days of collection. Extracts may be held up to 7 days before analysis, if stored under an inert (oxidant free) atmosphere.[2] The extract should be protected from light.

10. Sample Extraction

10.1 Mark the water meniscus on the side of the sample bottle for later determination of sample volume. Pour the entire sample into a 2–L separatory funnel. Check the pH of the sample with wide-range pH paper and adjust to within the range of 6.5 to 7.5 with sodium hydroxide solution or sulfuric acid.

10.2 Add 100 mL of chloroform to the sample bottle, seal, and shake 30 s to rinse the inner surface. (Caution: Handle chloroform in a well ventilated area.) Transfer the solvent to the separatory funnel and extract the sample by shaking the funnel for 2 min with periodic venting to release excess pressure. Allow the organic layer to separate from the water phase for a minimum of 10 min. If the emulsion interface between layers is more than one-third the volume of the solvent layer, the analyst must employ mechanical techniques to complete the phase

separation. The optimum technique depends upon the sample, but may include stirring, filtration of the emulsion through glass wool, centrifugation, or other physical methods. Collect the chloroform extract in a 250-mL separatory funnel.

10.3 Add a 50-mL volume of chloroform to the sample bottle and repeat the extraction procedure a second time, combining the extracts in the separatory funnel. Perform a third extraction in the same manner.

10.4 Separate and discard any aqueous layer remaining in the 250-mL separatory funnel after combining the organic extracts. Add 25 mL of 1 M sulfuric acid and extract the sample by shaking the funnel for 2 min. Transfer the aqueous layer to a 250-mL beaker. Extract with two additional 25-mL portions of 1 M sulfuric acid and combine the acid extracts in the beaker.

10.5 Place a stirbar in the 250-mL beaker and stir the acid extract while carefully adding 5 mL of 0.4 M sodium tribasic phosphate. While monitoring with a pH meter, neutralize the extract to a pH between 6 and 7 by dropwise addition of 5 N sodium hydroxide solution while stirring the solution vigorously. Approximately 25 to 30 mL of 5 N sodium hydroxide solution will be required and it should be added over at least a 2-min period. Do not allow the sample pH to exceed 8.

10.6 Transfer the neutralized extract into a 250-mL separatory funnel. Add 30 mL of chloroform and shake the funnel for 2 min. Allow the phases to separate, and transfer the organic layer to a second 250-mL separatory funnel.

10.7 Extract the aqueous layer with two additional 20-mL aliquots of chloroform as before. Combine the extracts in the 250-mL separatory funnel.

10.8 Add 20 mL of reagent water to the combined organic layers and shake for 30 s.

10.9 Transfer the organic extract into a 100-mL round bottom flask. Add 20 mL of methanol and concentrate to 5 mL with a rotary evaporator at reduced pressure and 35 °C. An aspirator is recommended for use as the source of vacuum. Chill the receiver with ice. This operation requires approximately 10 min. Other concentration techniques may be used if the requirements of Section 8.2 are met.

10.10 Using a 9-in. Pasteur pipette, transfer the extract to a 15-mL, conical, screw-cap centrifuge tube. Rinse the flask, including the entire side wall, with 2-mL portions of methanol and combine with the original extract.

10.11 Carefully concentrate the extract to 0.5 mL using a gentle stream of nitrogen while heating in a 30 °C water bath. Dilute to 2 mL with methanol, reconcentrate to 1 mL, and dilute to 5 mL with acetate buffer. Mix the extract thoroughly. Cap the centrifuge tube and store refrigerated and protected from light if further processing will not be performed immediately. If the extract will be stored longer than two days, it should be transferred to a Teflon-sealed screw-cap vial. If the sample extract requires no further cleanup, proceed with HPLC analysis (Section 12). If the sample requires further cleanup, proceed to Section 11.

10.12 Determine the original sample volume by refilling the sample bottle to the mark and transferring the liquid to a 1,000-mL graduated cylinder. Record the sample volume to the nearest 5 mL.

11. Cleanup and Separation

11.1 Cleanup procedures may not be necessary for a relatively clean sample matrix. If particular circumstances demand the use of a cleanup procedure, the analyst first must demonstrate that the requirements of Section 8.2 can be met using the method as revised to incorporate the cleanup procedure.

12. High Performance Liquid Chromatography

12.1 Table 1 summarizes the recommended operating conditions for the HPLC. Included in this table are retention times, capacity factors, and MDL that can be achieved under these conditions. An example of the separations achieved by this HPLC column is shown in Figure 1. Other HPLC columns, chromatographic conditions, or detectors may be used if the requirements of Section 8.2 are met. When the HPLC is idle, it is advisable to maintain a 0.1 mL/min flow through the column to prolong column life.

12.2 Calibrate the system daily as described in Section 7.

12.3 If the internal standard calibration procedure is being used, the internal standard must be added to the sample extract and mixed thoroughly immediately before injection into the instrument.

12.4 Inject 5 to 25 µL of the sample extract or standard into the HPLC. If constant volume injection loops are not used, record the volume injected to the nearest 0.05 µL, and the resulting peak size in area or peak height units.

12.5 Identify the parameters in the sample by comparing the retention times of the peaks in the sample chromatogram with those of the peaks in standard chromatograms. The width of the retention time window used to make identifications should be based upon measurements of actual retention time variations of standards over the course of a day. Three times the standard deviation of a retention time for a compound can be used to calculate a suggested window size; however, the experience of the analyst should weigh heavily in the interpretation of chromatograms.

12.6 If the response for a peak exceeds the working range of the system, dilute the extract with mobile phase and reanalyze.

12.7 If the measurement of the peak response for benzidine is prevented by the presence of interferences, reduce the electrode potential to + 0.6 V and reanalyze. If the benzidine peak is still obscured by interferences, further cleanup is required.

13. Calculations

13.1 Determine the concentration of individual compounds in the sample.

13.1.1 If the external standard calibration procedure is used, calculate the amount of material injected from the peak response using the calibration curve or calibration factor determined in Section 7.2.2. The concentration in the sample can be calculated from Equation 2.

$$\text{Concentration } (\mu g/L) = \frac{(A)(V_t)}{(V_i)(V_s)}$$

Equation 2

where:

A = Amount of material injected (ng).
V_i = Volume of extract injected (μL).
V_t = Volume of total extract (μL).
V_s = Volume of water extracted (mL).

13.1.2 If the internal standard calibration procedure is used, calculate the concentration in the sample using the response factor (RF) determined in Section 7.3.2 and Equation 3.

$$\text{Concentration } (\mu g/L) = \frac{(A_s)(I_s)}{(A_{is})(RF)(V_o)}$$

Equation 3

where:

A_s = Response for the parameter to be measured.
A_{is} = Response for the internal standard.
I_s = Amount of internal standard added to each extract (μg).
V_o = Volume of water extracted (L).

13.2 Report results in μg/L without correction for recovery data. All QC data obtained should be reported with the sample results.

14. Method Performance

14.1 The method detection limit (MDL) is defined as the minimum concentration of a substance that can be measured and reported with 99% confidence that the value is above zero.[1] The MDL concentrations listed in Table 1 were obtained using reagent water.[10] Similar results were achieved using representative wastewaters. The MDL actually achieved in a given analysis will vary depending on instrument sensitivity and matrix effects.

14.2 This method has been tested for linearity of spike recovery from reagent water and has been demonstrated to be applicable over the concentration range from 7 × MDL to 3000 × MDL.[10]

14.3 This method was tested by 17 laboratories using reagent water, drinking water, surface water, and three industrial wastewaters spiked at six concentrations over the range 1.0 to 70 μg/L.[11] Single operator precision, overall precision, and method accuracy were found to be directly related to the concentration of the parameter and essentially independent of the sample matrix. Linear equations to describe these relationships are presented in Table 3.

References

1. 40 CFR part 136, appendix B.

2. ''Determination of Benzidines in Industrial and Muncipal Wastewaters,'' EPA 600/4–82–022, National Technical Information Service, PB82–196320, Springfield, Virginia 22161, April 1982.

3. ASTM Annual Book of Standards, Part 31, D3694–78. ''Standard Practices for Preparation of Sample Containers and for Preservation of Organic Constituents,'' American Society for Testing and Materials, Philadelphia.

4. ''Carcinogens—Working With Carcinogens,'' Department of Health, Education, and Welfare, Public Health Service, Center for Disease Control, National Institute for Occupational Safety and Health, Publication No. 77–206, August 1977.

5. ''OSHA Safety and Health Standards, General Industry,'' (29 CFR part 1910), Occupational Safety and Health Administration, OSHA 2206 (Revised, January 1976).

6. ''Safety in Academic Chemistry Laboratories,'' American Chemical Society Publication, Committee on Chemical Safety, 3rd Edition, 1979.

7. Provost, L.P., and Elder, R.S. ''Interpretation of Percent Recovery Data,'' *American* Laboratory, 15, 58–63 (1983). (The value 2.44 used in the equation in Section 8.3.3 is two times the value 1.22 derived in this report.)

8. ASTM Annual Book of Standards, Part 31, D3370–76. ''Standard Practices for Sampling Water,'' American Society for Testing and Materials, Philadelphia.

9. ''Methods 330.4 (Titrimetric, DPD-FAS) and 330.5 (Spectrophotometric, DPD) for Chlorine Total Residual,'' Methods for Chemical Analysis of Water and Wastes, EPA–600/4–79–020, U.S. Environmental Protection Agency, Environmental Monitoring and Support Laboratory, Cincinnati, Ohio 45268, March 1979.

10. ''EPA Method Study 15, Method 605 (Benzidines),'' EPA 600/4–84–062, National Technical Information Service, PB84–211176, Springfield, Virginia 22161, June 1984.

11. ''EPA Method Validation Study 15, Method 605 (Benzidines),'' Report for EPA Contract 68–03–2624 (In preparation).

TABLE 1—CHROMATOGRAPHIC CONDITIONS AND METHOD DETECTION LIMITS

Parameter	Retention time (min)	Column capacity factor (k′)	Method detection limit (μg/L)
Benzidine	6.1	1.44	0.08
3,3′-Dichlorobenzidine	12.1	3.84	0.13

HPLC Column conditions: Lichrosorb RP–2, 5 micron particle size, in a 25 cm × 4.6 mm ID stainless steel column. Mobile Phase: 0.8 mL/min of 50% acetonitrile/50% 0.1M pH 4.7 acetate buffer. The MDL were determined using an electrochemical detector operated at + 0.8 V.

TABLE 2—QC ACCEPTANCE CRITERIA—METHOD 605

Parameter	Test conc. (μg/L)	Limit for s (μg/L)	Range for $\bar{X}$ (μg/L)	Range for P, P_s (percent)
Benzidine	50	18.7	9.1–61.0	D–140
3.3′-Dichlorobenzidine	50	23.6	18.7–50.0	5–128

s = Standard deviation of four recovery measurements, in μg/L (Section 8.2.4).
$\bar{X}$ = Average recovery for four recovery measurements, in μg/L (Section 8.2.4).
P, P_s = Percent recovery measured (Section 8.3.2, Section 8.4.2).
D = Detected; result must be greater than zero.

Note: These criteria are based directly upon the method performance data in Table 3. Where necessary, the limits for recovery have been broadened to assure applicability of the limits to concentrations below those used to develop Table 3.

TABLE 3—METHOD ACCURACY AND PRECISION AS FUNCTIONS OF CONCENTRATION—METHOD 605

Parameter	Accuracy, as recovery, X′(μg/L)	Single analyst precision, s_r' (μg/L)	Overall precision, S′ (μg/L)
Benzidine	0.70C + 0.06	$0.28\bar{X} + 0.19$	$0.40\bar{X} + 0.18$
3,3′-Dichlorobenzidine	0.66C + 0.23	$0.39\bar{X} - 0.05$	$0.38\bar{X} + 0.02$

X′ = Expected recovery for one or more measurements of a sample containing a concentration of C, in μg/L.
s_r' = Expected single analyst standard deviation of measurements at an average concentration found of $\bar{X}$, in μg/L.
S′ = Expected interlaboratory standard deviation of measurements at an average concentration found of $\bar{X}$, in μg/L.
C = True value for the concentration, in μg/L.
$\bar{X}$ = Average recovery found for measurements of samples containing a concentration of C, in μg/L.

COLUMN: LICHROSORB RP-2
MOBILE PHASE: 50% ACETONITRILE IN ACETATE BUFFER
DETECTOR: ELECTROCHEMICAL AT + 0.8 V

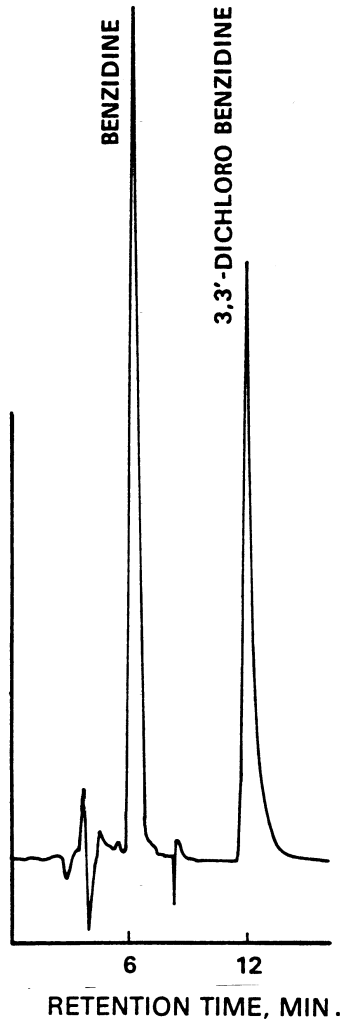

Figure 1. Liquid chromatogram of benzidines.

METHOD 606—PHTHALATE ESTER

1. Scope and Application

1.1 This method covers the determination of certain phthalate esters. The following parameters can be determined by this method:

Parameter	STORET No.	CAS No.
Bis(2-ethylhexyl) phthalate	39100	117–81–7
Butyl benzyl phthalate	34292	85–68–7
Di-n-butyl phthalate	39110	84–74–2
Diethyl phthalate	34336	84–66–2
Dimethyl phthalate	34341	131–11–3
Di-n-octyl phthalate	34596	117–84–0

1.2 This is a gas chromatographic (GC) method applicable to the determination of the compounds listed above in municipal and industrial discharges as provided under 40 CFR 136.1. When this method is used to analyze unfamiliar samples for any or all of the compounds above, compound identifications should be supported by at least one additional qualitative technique. This method describes analytical conditions for a second gas chromatographic column that can be used to confirm measurements made with the primary column. Method 625 provides gas chromatograph/mass spectrometer (GC/MS) conditions appropriate for the qualitative and quantitative confirmation of results for all of the parameters listed above, using the extract produced by this method.

1.3 The method detection limit (MDL, defined in Section 14.1)[1] for each parameter is listed in Table 1. The MDL for a specific wastewater may differ from those listed, depending upon the nature of interferences in the sample matrix.

1.4 The sample extraction and concentration steps in this method are essentially the same as in Methods 608, 609, 611, and 612. Thus, a single sample may be extracted to measure the parameters included in the scope of each of these methods. When cleanup is required, the concentration levels must be high enough to permit selecting aliquots, as necessary, to apply appropriate cleanup procedures. The analyst is allowed the latitude, under Section 12, to select chromatographic conditions appropriate for the simultaneous measurement of combinations of these parameters.

1.5 Any modification of this method, beyond those expressly permitted, shall be considered as a major modification subject to application and approval of alternate test procedures under 40 CFR 136.4 and 136.5.

1.6 This method is restricted to use by or under the supervision of analysts experienced in the use of a gas chromatograph and in the interpretation of gas chromatograms. Each analyst must demonstrate the ability to generate acceptable results with this method using the procedure described in Section 8.2.

2. Summary of Method

2.1 A measured volume of sample, approximately 1–L, is extracted with methylene chloride using a separatory funnel. The methylene chloride extract is dried and exchanged to hexane during concentration to a volume of 10 mL or less. The extract is separated by gas chromatography and the phthalate esters are then measured with an electron capture detector.[2]

2.2 Analysis for phthalates is especially complicated by their ubiquitous occurrence in the environment. The method provides Florisil and alumina column cleanup procedures to aid in the elimination of interferences that may be encountered.

3. Interferences

3.1 Method interferences may be caused by contaminants in solvents, reagents, glassware, and other sample processing hardware that lead to discrete artifacts and/or elevated baselines in gas chromatograms. All of these materials must be routinely demonstrated to be free from interferences under the conditions of the analysis by running laboratory reagent blanks as described in Section 8.1.3.

3.1.1 Glassware must be scrupulously cleaned.[3] Clean all glassware as soon as possible after use by rinsing with the last solvent used in it. Solvent rinsing should be followed by detergent washing with hot water, and rinses with tap water and distilled water. The glassware should then be drained dry, and heated in a muffle furnace at 400 °C for 15 to 30 min. Some thermally stable materials, such as PCBs, may not be eliminated by this treatment. Solvent rinses with acetone and pesticide quality hexane may be substituted for the muffle furnace heating. Thorough rinsing with such solvents usually eliminates PCB interference. Volumetric ware should not be heated in a muffle furnace. After drying and cooling, glassware should be sealed and stored in a clean environment to prevent any accumulation of dust or other contaminants. Store inverted or capped with aluminum foil.

3.1.2 The use of high purity reagents and solvents helps to minimize interference problems. Purification of solvents by distillation in all-glass systems may be required.

3.2 Phthalate esters are contaminants in many products commonly found in the laboratory. It is particularly important to avoid the use of plastics because phthalates are commonly used as plasticizers and are easily extracted from plastic materials. Serious phthalate contamination can result at any time, if consistent quality control is not practiced. Great care must be experienced to prevent such contamination. Exhaustive cleanup of reagents and glassware may be required to eliminate background phthalate contamination.[4 5]

3.3 Matrix interferences may be caused by contaminants that are co-extracted from the sample. The extent of matrix interferences will vary considerably from source to source, depending upon the nature and diversity of the industrial complex or municipality being sampled. The cleanup procedures in Section 11 can be used to overcome many of these interferences, but unique samples may require additional cleanup approaches to achieve the MDL listed in Table 1.

4. Safety

4.1 The toxicity or carcinogenicity of each reagent used in this method has not been precisely defined; however, each chemical compound should be treated as a potential health hazard. From this viewpoint, exposure to these chemicals must be reduced to the lowest possible level by whatever means available. The laboratory is responsible for maintaining a current awareness file of OSHA regulations regarding the safe handling of the chemicals specified in this method. A reference file of material data handling sheets should also be made available to all personnel involved in the chemical analysis. Additional references to laboratory safety are available and have been identified[6 8] for the information of the analyst.

5. Apparatus and Materials

5.1 Sampling equipment, for discrete or composite sampling.

5.1.1 Grab sample bottle—1–L or 1–qt, amber glass, fitted with a screw cap lined with Teflon. Foil may be substituted for Teflon if the sample is not corrosive. If amber bottles are not available, protect samples from light. The bottle and cap liner must be washed, rinsed with acetone or methylene chloride, and dried before use to minimize contamination.

5.1.2 Automatic sampler (optional)—The sampler must incorporate glass sample containers for the collection of a minimum of 250 mL of sample. Sample containers must be kept refrigerated at 4 °C and protected from light during compositing. If the sampler uses a peristaltic pump, a minimum length of compressible silicone rubber tubing may be used. Before use, however, the compressible tubing should be thoroughly rinsed with methanol, followed by repeated rinsings with distilled water to minimize the potential for contamination of the sample. An integrating flow meter is required to collect flow proportional composites.

5.2 Glassware (All specifications are suggested. Catalog numbers are included for illustration only).

5.2.1 Separatory funnel—2–L, with Teflon stopcock.

5.2.2 Drying column—Chromatographic column, approximately 400 mm long × 19 mm ID, with coarse frit filter disc.

5.2.3 Chromatographic column—300 mm long × 10 mm ID, with Teflon stopcock and coarse frit filter disc at bottom (Kontes K–420540–0213 or equivalent).

5.2.4 Concentrator tube, Kuderna-Danish—10–mL, graduated (Kontes K–570050–1025 or equivalent). Calibration must be checked at the volumes employed in the test. Ground glass stopper is used to prevent evaporation of extracts.

5.2.5 Evaporative flask, Kuderna-Danish—500–mL (Kontes K–570001–0500 or equivalent). Attach to concentrator tube with springs.

5.2.6 Snyder column, Kuderna-Danish—Three-ball macro (Kontes K–503000–0121 or equivalent).

5.2.7 Snyder column, Kuderna-Danish—Two-ball micro (Kontes K–569001–0219 or equivalent).

5.2.8 Vials—10 to 15–mL, amber glass, with Teflon-lined screw cap.

5.3 Boiling chips—Approximately 10/40 mesh. Heat to 400 °C for 30 min or Soxhlet extract with methylene chloride.

5.4 Water bath—Heated, with concentric ring cover, capable of temperature control (±2 °C). The bath should be used in a hood.

5.5 Balance—Analytical, capable of accurately weighing 0.0001 g.

5.6 Gas chromatograph—An analytical system complete with gas chromatograph suitable for on-column injection and all required accessories including syringes, analytical columns, gases, detector, and strip-chart recorder. A data system is recommended for measuring peak areas.

5.6.1 Column 1—1.8 m long × 4 mm ID glass, packed with 1.5% SP–2250/1.95% SP–2401 Supelcoport (100/120 mesh) or equivalent. This column was used to develop the method performance statemelts in Section 14. Guidelines for the use of alternate column packings are provided in Section 12.1.

5.6.2 Column 2—1.8 m long × 4 mm ID glass, packed with 3% OV–1 on Supelcoport (100/120 mesh) or equivalent.

5.6.3 Detector—Electron capture detector. This detector has proven effective in the analysis of wastewaters for the parameters listed in the scope (Section 1.1), and was used to develop the method performance statements in Section 14. Guidelines for the use of alternate detectors are provided in Section 12.1.

6. Reagents

6.1 Reagent water—Reagent water is defined as a water in which an interferent is not observed at the MDL of the parameters of interest.

6.2 Acetone, hexane, isooctane, methylene chloride, methanol—Pesticide quality or equivalent.

6.3 Ethyl ether—nanograde, redistilled in glass if necessary.

6.3.1 Ethyl ether must be shown to be free of peroxides before it is used as indicated by

EM Laboratories Quant test strips. (Available from Scientific Products Co., Cat. No. P1126–8, and other suppliers.)

6.3.2 Procedures recommended for removal of peroxides are provided with the test strips. After cleanup, 20 mL of ethyl alcohol preservative must be added to each liter of ether.

6.4 Sodium sulfate—(ACS) Granular, anhydrous. Several levels of purification may be required in order to reduce background phthalate levels to an acceptable level: 1) Heat 4 h at 400 °C in a shallow tray, 2) Heat 16 h at 450 to 500 °C in a shallow tray, 3) Soxhlet extract with methylene chloride for 48 h.

6.5 Florisil—PR grade (60/100 mesh). Purchase activated at 1250 °F and store in the dark in glass containers with ground glass stoppers or foil-lined screw caps. To prepare for use, place 100 g of Florisil into a 500-mL beaker and heat for approximately 16 h at 40 °C. After heating transfer to a 500-mL reagent bottle. Tightly seal and cool to room temperature. When cool add 3 mL of reagent water. Mix thoroughly by shaking or rolling for 10 min and let it stand for at least 2 h. Keep the bottle sealed tightly.

6.6 Alumina—Neutral activity Super I, W200 series (ICN Life Sciences Group, No. 404583). To prepare for use, place 100 g of alumina into a 500-mL beaker and heat for approximately 16 h at 400 °C. After heating transfer to a 500-mL reagent bottle. Tightly seal and cool to room temperature. When cool add 3 mL of reagent water. Mix thoroughly by shaking or rolling for 10 min and let it stand for at least 2 h. Keep the bottle sealed tightly.

6.7 Stock standard solutions (1.00 μg/μL)—Stock standard solutions can be prepared from pure standard materials or purchased as certified solutions.

6.7.1 Prepare stock standard solutions by accurately weighing about 0.0100 g of pure material. Dissolve the material in isooctane and dilute to volume in a 10-mL volumetric flask. Larger volumes can be used at the convenience of the analyst. When compound purity is assayed to be 96% or greater, the weight can be used without correction to calculate the concentration of the stock standard. Commercially prepared stock standards can be used at any concentration if they are certified by the manufacturer or by an independent source.

6.7.2 Transfer the stock standard solutions into Teflon-sealed screw-cap bottles. Store at 4 °C and protect from light. Stock standard solutions should be checked frequently for signs of degradation or evaporation, especially just prior to preparing calibration standards from them.

6.7.3 Stock standard solutions must be replaced after six months, or sooner if comparison with check standards indicates a problem.

6.8 Quality control check sample concentrate—See Section 8.2.1.

7. Calibration

7.1 Establish gas chromatograph operating conditions equivalent to those given in Table 1. The gas chromatographic system can be calibrated using the external standard technique (Section 7.2) or the internal standard technique (Section 7.3).

7.2 External standard calibration procedure:

7.2.1 Prepared calibration standards at a minimum of three concentration levels for each parameter of interest by adding volumes of one or more stock standards to a volumetric flask and diluting to volume with isooctane. One of the external standards should be at a concentration near, but above, the MDL (Table 1) and the other concentrations should correspond to the expected range of concentrations found in real samples or should define the working range of the detector.

7.2.2 Using injections of 2 to 5 μL, analyze each calibration standard according to Section 12 and tabulate peak height or area responses against the mass injected. The results can be used to prepare a calibration curve for each compound. Alternatively, if the ratio of response to amount injected (calibration factor) is a constant over the working range (<10% relative standard deviation, RSD), linearity through the origin can be assumed and the average ratio or calibration factor can be used in place of a calibration curve.

7.3 Internal standard calibration procedure—To use this approach, the analyst must select one or more internal standards that are similar in analytical behavior to the compounds of interest. The analyst must further demonstrate that the measurement of the internal standard is not affected by method or matrix interferences. Because of these limitations, no internal standard can be suggested that is applicable to all samples.

7.3.1 Prepare calibration standards at a minimum of three concentration levels for each parameter of interest by adding volumes of one or more stock standards to a volumetric flash. To each calibration standard, add a known constant amount of one or more internal standards, and dilute to volume with isooctane. One of the standards should be at a concentration near, but above, the MDL and the other concentrations should correspond to the expected range of concentrations found in real samples or should define the working range of the detector.

7.3.2 Using injections of 2 to 5 μL, analyze each calibration standard according to Section 12 and tabulate peak height or area responses against concentration for each compound and internal standard. Calculate response factors (RF) for each compound using Equation 1.

$$RF = (A_s)(C_{is}\ (A_{is})(C_s)$$

Equation 1

where:

A_s = Response for the parameter to be measured.

A_{is} = Response for the internal standard.

C_{is} = Concentration of the internal standard (μg/L).

C_s = Concentration of the parameter to be measured (μg/L).

If the RF value over the working range is a constant (<10% RSD), the RF can be assumed to be invariant and the average RF can be used for calculations. Alternatively, the results can be used to plot a calibration curve of response ratios, A_s/A_{is}, vs. RF.

7.4 The working calibration curve, calibration factor, or RF must be verified on each working day by the measurement of one or more calibration standards. If the response for any parameter varies from the predicted response by more than ±15%, a new calibration curve must be prepared for that compound.

7.5 Before using any cleanup procedure, the analyst must process a series of calibration standards through the procedure to validate elution patterns and the absence of interferences from the reagents.

8. Quality Control

8.1 Each laboratory that uses this method is required to operate a formal quality control program. The minimum requirements of this program consist of an initial demonstration of laboratory capability and an ongoing analysis of spiked samples to evaluate and document data quality. The laboratory must maintain records to document the quality of data that is generated. Ongoing data quality checks are compared with established performance criteria to determine if the results of analyses meet the performance characteristics of the method. When results of sample spikes indicate atypical method performance, a quality control check standard must be analyzed to confirm that the measurements were performed in an in-control mode of operation.

8.1.1 The analyst must make an initial, one-time, demonstration of the ability to generate acceptable accuracy and precision with this method. This ability is established as described in Section 8.2.

8.1.2 In recognition of advances that are occurring in chromatography, the analyst is permitted certain options (detailed in Sections 10.4, 11.1, and 12.1) to improve the separations or lower the cost of measurements. Each time such a modification is made to the method, the analyst is required to repeat the procedure in Section 8.2.

8.1.3 Before processing any samples, the analyst must analyze a reagent water blank to demonstrate that interferences from the analytical system and glassware are under control. Each time a set of samples is extracted or reagents are changed, a reagent water blank must be processed as a safeguard against laboratory contamination.

8.1.4 The laboratory must, on an ongoing basis, spike and analyze a minimum of 10% of all samples to monitor and evaluate laboratory data quality. This procedure is described in Section 8.3.

8.1.5 The laboratory must, on an ongoing basis, demonstrate through the analyses of quality control check standards that the operation of the measurement system is in control. This procedure is described in Section 8.4. The frequency of the check standard analyses is equivalent to 10% of all samples analyzed but may be reduced if spike recoveries from samples (Section 8.3) meet all specified quality control criteria.

8.1.6 The laboratory must maintain performance records to document the quality of data that is generated. This procedure is described in Section 8.5.

8.2 To establish the ability to generate acceptable accuracy and precision, the analyst must perform the following operations.

8.2.1 A quality contrml (QC) check sample concentrate is required containing each parameter of interest at the following concentrations in acetone: butyl benzyl phthalate, 10 μg/mL; bis(2-ethylhexyl) phthalate, 50 μg/mL; di-n-octyl phthalate, 50 μg/mL; any other phthlate, 25 μg/mL. The QC check sample concentrate must be obtained from the U.S. Environmental Protection Agancy, Environmental Monitoring and Support Laboratory in Cincinnati, Ohio, if available. If not available from that source, the QC check sample concentrate must be obtained from another external source. If not available from either source above, the QC check sample concentrate must be prepared by the laboratory using stock standards prepared independently from those used for calibration.

8.2.2 Using a pipet, prepare QC check samples at the test concentrations shown in Table 2 by adding 1.00 mL of QC check sample concentrate to each of four 1–L aliquots of reagent water.

8.2.3 Analyze the well-mixed QC check samples according to the method beginning in Section 10.

8.2.4 Calculate the average recovery ($\bar{X}$) in μg/L, and the standard deviation of the recovery (s) in μg/L, for each parameter using the four results.

8.2.5 For each parameter compare s and $\bar{X}$ with the corresponding acceptance criteria for precision and accuracy, respectively,

found in Table 2. If s and $\bar{X}$ for all parameters of interest meet the acceptance criteria, the system performance is acceptable and analysis of actual samples can begin. If any individual s exceeds the precision limit or any individual $\bar{X}$ falls outside the range for accuracy, the system performance is unacceptable for that parameter. Locate and correct the source of the problem and repeat the test for all parameters of interest beginning with Section 8.2.2.

8.3 The laboratory must, on an ongoing basis, spike at least 10% of the samples from each sample site being monitored to assess accuracy. For laboratories analyzing one to ten samples per month, at least one spiked sample per month is required.

8.3.1 The concentration of the spike in the sample should be determined as follows:

8.3.1.1 If, as in compliance monitoring, the concentration of a specific parameter in the sample is being checked against a regulatory concentration limit, the spike should be at that limit or 1 to 5 times higher than the background concentration determined in Section 8.3.2, whichever concentration would be larger.

8.3.1.2 If the concentration of a specific parameter in the sample is not being checked against a limit specific to that parameter, the spike should be at the test concentration in Section 8.2.2 or 1 to 5 times higher than the background concentration determined in Section 8.3.2, whichever concentration would be larger.

8.3.1.3 If it is impractical to determine background levels before spiking (e.g., maximum holding times will be exceeded), the spike concentration should be (1) the regulatory concentration limit, if any; or, if none (2) the larger of either 5 times higher than the expected background concentration or the test concentration in Section 8.2.2.

8.3.2 Analyze one sample aliquot to determine the background concentration (B) of each parameter. If necessary, prepare a new QC check sample concentrate (Section 8.2.1) appropriate for the background concentrations in the sample. Spike a second sample aliquot with 1.0 mL of the QC check sample concentrate and analyze it to determine the concentration after spiking (A) of each parameter. Calculate each percent recovery (P) as 100(A-B)%/T, where T is the known true value of the spike.

8.3.3 Compare the percent recovery (P) for each parameter with the corresponding QC acceptance criteria found in Table 2. These acceptance criteria were calculated to include an allowance for error in measurement of both the background and spike concentrations, assuming a spike to background ratio of 5:1. This error will be accounted for to the extent that the analyst's spike to background ratio approaches 5:1.[9] If spiking was performed at a concentration lower than the test concentration in Section 8.2.2, the analyst must use either the QC acceptance criteria in Table 2, or optional QC acceptance criteria calculated for the specific spike concentration. To calculate optional acceptance criteria for the recovery of a parameter: (1) Calculate accuracy (X′) using the equation in Table 3, substituting the spike concentration (T) for C; (2) calculate overall precision (S′) using the equation in Table 3, substituting X′ for $\bar{X}$; (3) calculate the range for recovery at the spike concentration as (100 X′/T)±2.44(100 S′/T)%.[9]

8.3.4 If any individual P falls outside the designated range for recovery, that parameter has failed the acceptance criteria. A check standard containing each parameter that failed the criteria must be analyzed as described in Section 8.4.

8.4 If any parameter fails the acceptance criteria for recovery in Section 8.3, a QC check standard containing each parameter that failed must be prepared and analyzed.

NOTE: The frequency for the required analysis of a QC check standard will depend upon the number of parameters being simultaneously tested, the complexity of the sample matrix, and the performance of the laboratory.

8.4.1 Prepare the QC check standard by adding 1.0 mL of QC check sample concentrate (Section 8.2.1 or 8.3.2) to 1 L of reagent water. The QC check standard needs only to contain the parameters that failed criteria in the test in Section 8.3.

8.4.2 Analyze the QC check standard to determine the concentration measured (A) of each parameter. Calculate each percent recovery (P_s) as 100 (A/T)%, where T is the true value of the standard concentration.

8.4.3 Compare the percent recovery (P_s) for each parameter with the corresponding QC acceptance criteria found in Table 2. Only parameters that failed the test in Section 8.3 need to be compared with these criteria. If the recovery of any such parameter falls outside the designated range, the laboratory performance for that parameter is judged to be out of control, and the problem must be immediately identified and corrected. The analytical result for that parameter in the unspiked sample is suspect and may not be reported for regulatory compliance purposes.

8.5 As part of the QC program for the laboratory, method accuracy for wastewater samples must be assessed and records must be maintained. After the analysis of five spiked wastewater samples as in Section 8.3, calculate the average percent recovery ($\bar{P}$) and the standard deviation of the percent recovery (s_p). Express the accuracy assessment as a percent recovery interval from $\bar{P} - 2s_p$ to $\bar{P} + 2s_p$. If $\bar{P}$ = 90% and s_p = 10%, for example, the accuracy interval is expressed as 70–110%. Update the accuracy assessment for each parameter on a regular basis (e.g. after each five to ten new accuracy measurements).

8.6 It is recommended that the laboratory adopt additional quality assurance practices for use with this method. The specific practices that are most productive depend upon the needs of the laboratory and the nature of the samples. Field duplicates may be analyzed to assess the precision of the environmental measurements. When doubt exists over the identification of a peak on the chromatogram, confirmatory techniques such as gas chromatography with a dissimilar column, specific element detector, or mass spectrometer must be used. Whenever possible, the laboratory should analyze standard reference materials and participate in relevant performance evaluation studies.

9. Sample Collection, Preservation, and Handling

9.1 Grab samples must be collected in glass containers. Conventional sampling practices[10] should be followed, except that the bottle must not be prerinsed with sample before collection. Composite samples should be collected in refrigerated glass containers in accordance with the requirements of the program. Automatic sampling equipment must be as free as possible of Tygon tubing and other potential sources of contamination.

9.2 All samples must be iced or refrigerated at 4 °C from the time of collection until extraction.

9.3 All samples must be extracted within 7 days of collection and completely analyzed within 40 days of extraction.[2]

10. Sample Extraction

10.1 Mark the water meniscus on the side of the sample bottle for later determination of sample volume. Pour the entire sample into a 2–L separatory funnel.

10.2 Add 60 mL of methylene chloride to the sample bottle, seal, and shake 30 s to rinse the inner surface. Transfer the solvent to the separatory funnel and extract the sample by shaking the funnel for 2 min. with periodic venting to release excess pressure. Allow the organic layer to separate from the water phase for a minimum of 10 min. If the emulsion interface between layers is more than one-third the volume of the solvent layer, the analyst must employ mechanical techniques to complete the phrase separation. The optimum technique depends upon the sample, but may include stirring, filtration of the emulsion through glass wool, centrifugation, or other physical methods. Collect the methylene chloride extract in a 250-mL Erlenmeyer flask.

10.3 Add a second 60-mL volume of methylene chloride to the sample bottle and repeat the extraction procedure a second time, combining the extracts in the Erlenmeyer flask. Perform a third extraction in the same manner.

10.4 Assemble a Kuderna-Danish (K-D) concentrator by attaching a 10-mL concentrator tube to a 500-mL evaporative flask. Other concentrator devices or techniques may be used in place of the K-D concentrator if the requirements of Section 8.2 are met.

10.5 Pour the combined extract through a solvent-rinsed drying column containing about 10 cm of anhydrous sodium sulfate, and collect the extract in the K-D concentrator. Rinse the Erlenmeyer flask and column with 20 to 30 mL of methylene chloride to complete the quantitative transfer.

10.6 Add one or two clean boiling chips to the evaporative flask and attach a three-ball Snyder column. Prewet the Snyder column by adding about 1 mL of methylene chloride to the top. Place the K-D apparatus on a hot water bath (60 to 65 °C) so that the concentrator tube is partially immersed in the hot water, and the entire lower rounded surface of the flask is bathed with hot vapor. Adjust the vertical position of the apparatus and the water temperature as required to complete the concentration in 15 to 20 min. At the proper rate of distillation the balls of the column will actively chatter but the chambers will not flood with condensed solvent. When the apparent volume of liquid reaches 1 mL, remove the K-D apparatus and allow it to drain and cool for at least 10 min.

10.7 Increase the temperature of the hot water bath to about 80 °C. Momentarily remove the Snyder column, add 50 mL of hexane and a new boiling chip, and reattach the Snyder column. Concentrate the extract as in Section 10.6, except use hexane to prewet the column. The elapsed time of concentration should be 5 to 10 min.

10.8 Remove the Snyder column and rinse the flask and its lower joint into the concentrator tube with 1 to 2 mL of hexane. A 5-mL syringe is recommended for this operation. Adjust the extract volume to 10 mL. Stopper the concentrator tube and store refrigerated if further processing will not be performed immediately. If the extract will be stored longer than two days, it should be transferred to a Teflon-sealed screw-cap vial. If the sample extract requires no further cleanup, proceed with gas chromatographic analysis (Section 12). If the sample requires further cleanup, proceed to Section 11.

10.9 Determine the original sample volume by refilling the sample bottle to the mark and transferring the liquid to a 1000-mL graduated cylinder. Record the sample volume to the nearest 5 mL.

11. Cleanup and Separation

11. Cleanup procedures may not be necessary for a relatively clean sample matrix. If particular circumstances demand the use of a cleanup procedure, the analyst may use either procedure below or any other appropriate procedure. However, the analyst first must demonstrate that the requirements of

Section 8.2 can be met using the method as revised to incorporate the cleanup procedure.

11.2 If the entire extract is to be cleaned up by one of the following procedures, it must be concentrated to 2.0 mL. To the concentrator tube in Section 10.8, add a clean boiling chip and attach a two-ball micro-Snyder column. Prewet the column by adding about 0.5 mL of hexane to the top. Place the micro-K-D apparatus on a hot water bath (80 °C) so that the concentrator tube is partially immersed in the hot water. Adjust the vertical position of the apparatus and the water temperature as required to complete the concentration in 5 to 10 min. At the proper rate of distillation the balls of the column will actively chatter but the chambers will not flood. When the apparent volume of liquid reaches about 0.5 mL, remove the K-D apparatus and allow it to drain and cool for at least 10 min. Remove the micro-Snyder column and rinse its lower joint into the concentrator tube with 0.2 mL of hexane. Adjust the final volume to 2.0 mL and proceed with one of the following cleanup procedures.

11.3 Florisil column cleanup for phthalate esters:

11.3.1 Place 10 g of Florisil into a chromatographic column. Tap the column to settle the Florisil and add 1 cm of anhydrous sodium sulfate to the top.

11.3.2 Preelute the column with 40 mL of hexane. The rate for all elutions should be about 2 mL/min. Discard the eluate and just prior to exposure of the sodium sulfate layer to the air, quantitatively transfer the 2-mL sample extract onto the column using an additional 2 mL of hexane to complete the transfer. Just prior to exposure of the sodium sulfate layer to the air, add 40 mL of hexane and continue the elution of the column. Discard this hexane eluate.

11.3.3 Next, elute the column with 100 mL of 20% ethyl ether in hexane (V/V) into a 500-mL K-D flask equipped with a 10-mL concentrator tube. Concentrate the collected fraction as in Section 10.6. No solvent exchange is necessary. Adjust the volume of the cleaned up extract to 10 mL in the concentrator tube and analyze by gas chromatography (Section 12).

11.4 Alumina column cleanup for phthalate esters:

11.4.1 Place 10 g of alumina into a chromatographic column. Tap the column to settle the alumina and add 1 cm of anhydrous sodium sulfate to the top.

11.4.2 Preelute the column with 40 mL of hexane. The rate for all elutions should be about 2 mL/min. Discard the eluate and just prior to exposure of the sodium sulfate layer to the air, quantitatively transfer the 2-mL sample extract onto the column using an additional 2 mL of hexane to complete the transfer. Just prior to exposure of the sodium sulfate layer to the air, add 35 mL of hexane and continue the elution of the column. Discard this hexane eluate.

11.4.3 Next, elute the column with 140 mL of 20% ethyl ether in hexane (V/V) into a 500-mL K-D flask equipped with a 10–mL concentrator type. Concentrate the collected fraction as in Section 10.6. No solvent exchange is necessary. Adjust the volume of the cleaned up extract to 10 mL in the concentrator tube and analyze by gas chromatography (Section 12).

12. Gas Chromatography

12.1 Table 1 summarizes the recommended operating conditions for the gas chromatograph. Included in this table are retention times and MDL that can be achieved under these conditions. Examples of the separations achieved by Column 1 are shown in Figures 1 and 2. Other packed or capillary (open-tubular) columns, chromatographic conditions, or detectors may be used if the requirements of Section 8.2 are met.

12.2 Calibrate the system daily as described in Section 7.

12.3 If the internal standard calibration procedure is being used, the internal staldard must be added to the sample extract and mixed thoroughly immediately before injection into the gas chromatograph.

12.4 Inject 2 to 5 µL of the sample extract or standard into the gas-chromatograph using the solvent-flush technique.[11] Smaller (1.0 µL) volumes may be injected if automatic devices are employed. Record the volume injected to the nearest 0.05 µL, and the resulting peak size in area or peak height units.

12.5 Identify the parameters in the sample by comparing the retention times of the peaks in the sample chromatogram with those of the peaks in standard chromatograms. The width of the retention time window used to make identifications should be based upon measurements of actual retention time variations of standards over the course of a day. Three times the standard deviation of a retention time for a compound can be used to calculate a suggested window size; however, the experience of the analyst should weigh heavily in the interpretation of chromatograms.

12.6 If the response for a peak exceeds the working range of the system, dilute the extract and reanalyze.

12.7 If the measurement of the peak response is prevented by the presence of interferences, further cleanup is required.

13. Calculations

13.1 Determine the concentration of individual compounds in the sample.

13.1.1 If the external standard calibration procedure is used, calculate the amount of material injected from the peak response using the calibration curve or calibration

factor determined in Section 7.2.2. The concentration in the sample can be calculated from Equation 2.

$$\text{Concentration } (\mu g/L) = \frac{(A)(V_t)}{(V_i)(Vs)}$$

Equation 2

where:
A = Amount of material injected (ng).
V_i = Volume of extract injected (μL).
V_t = Volume of total extract (μL).
V_s = Volume of water extracted (mL).

13.1.2 If the internal standard calibration procedure is used, calculate the concentration in the sample using the response factor (RF) determined in Section 7.3.2 and Equation 3.

$$\text{Concentration } (\mu g/L) = \frac{(A_s)(I_s)}{(A_{is})(RF)(V_o)}$$

Equation 3

where:
A_s = Response for the parameter to be measured.
A_{is} = Response for the internal standard.
I_s = Amount of internal standard added to each extract (μg).
V_o = Volume of water extracted (L).

13.2 Report results in μg/L without correction for recovery data. All QC data obtained should be reported with the sample results.

14. Method Performance

14.1 The method detection limit (MDL) is defined as the minimum concentration of a substance that can be measured and reported with 99% confidence that the value is above zero.[1] The MDL concentrations listed in Table 1 were obtained using reagent water.[12] Similar results were achieved using representative wastewaters. The MDL actually achieved in a given analysis will vary depending on instrument sensitivity and matrix effects.

14.2 This method has been tested for linearity of spike recovery from reagent water and has been demonstrated to be applicable over the concentration range from 5 × MDL to 1000 × MDL with the following exceptions: dimethyl and diethyl phthalate recoveries at 1000 × MDL were low (70%); bis-2-ethylhexyl and di-n-octyl phthalate recoveries at 5 × MDL were low (60%).[12]

14.3 This method was tested by 16 laboratories using reagent water, drinking water, surface water, and three industrial wastewaters spiked at six concentrations over the range 0.7 to 106 μg/L.[13] Single operator precision, overall precision, and method accuracy were found to be directly related to the concentration of the parameter and essentially independent of the sample matrix. Linear equations to describe these relationships are presented in Table 3.

References

1. 40 CFR part 136, appendix B.
2. ''Determination of Phthalates in Industrial and Muncipal Wastewaters,'' EPA 600/4–81–063, National Technical Information Service, PB81–232167, Springfield, Virginia 22161, July 1981.
3. ASTM Annual Book of Standards, Part 31, D3694–78. ''Standard Practices for Preparation of Sample Containers and for Preservation of Organic Constituents,'' American Society for Testing and Materials, Philadelphia.
4. Giam, C.S., Chan, H.S., and Nef, G.S. ''Sensitive Method for Determination of Phthalate Ester Plasticizers in Open-Ocean Biota Samples,'' *Analytical Chemistry*, *47*, 2225 (1975).
5. Giam, C.S., and Chan, H.S. ''Control of Blanks in the Analysis of Phthalates in Air and Ocean Biota Samples,'' U.S. National Bureau of Standards, Special Publication 442, pp. 701–708, 1976.
6. ''Carcinogens—Working with Carcinogens,'' Department of Health, Education, and Welfare, Public Health Service, Center for Disease Control, National Institute for Occupational Safety and Health, Publication No. 77–206, August 1977.
7. ''OSHA Safety and Health Standards, General Industry,'' (29 CFR part 1910), Occupational Safety and Health Administration, OSHA 2206 (Revised, January 1976).
8. ''Safety in Academic Chemistry Laboratories,'' American Chemical Society Publication, Committee on Chemical Safety, 3rd Edition, 1979.
9. Provost L.P., and Elder, R.S. ''Interpretation of Percent Recovery Data,'' *American Laboratory*, *15*, 58–63 (1983). (The value 2.44 used in the equation in Section 8.3.3 is two times the value 1.22 derived in this report.)
10. ASTM Annual Book of Standards, Part 31, D3370–76. ''Standard Practices for Sampling Water,'' American Society for Testing and Materials, Philadelphia.
11. Burke, J.A. ''Gas Chromatography for Pesticide Residue Analysis; Some Practical Aspects,'' *Journal of the Association of Official Analytical Chemists*, *48*, 1037 (1965).
12. ''Method Detection Limit and Analytical Curve Studies, EPA Methods 606, 607, and 608,'' Special letter report for EPA Contract 68–03–2606, U.S. Environmental Protection Agency, Environmental Monitoring and Support Laboratory, Cincinnati, Ohio 45268, June 1980.
13. ''EPA Method Study 16 Method 606 (Phthalate Esters),'' EPA 600/4–84–056, National Technical Information Service, PB84–211275, Springfield, Virginia 22161, June 1984.

TABLE 1—CHROMATOGRAPHIC CONDITIONS AND METHOD DETECTION LIMITS

Parameter	Retention time (min)		Method detection limit (μg/L)
	Column 1	Column 2	
Dimethyl phthalate	2.03	0.95	0.29
Diethyl phthalate	2.82	1.27	0.49
Di-n-butyl phthalate	8.65	3.50	0.36
Butyl benzyl phthalate	[a] 6.94	[a] 5.11	0.34
Bis(2-ethylhexyl) phthalate	[a] 8.92	[a] 10.5	2.0
Di-n-octyl phthalate	[a] 16.2	[a] 18.0	3.0

Column 1 conditions: Supelcoport (100/120 mesh) coated with 1.5% SP–2250/1.95% SP–2401 packed in a 1.8 m long × 4 mm ID glass column with 5% methane/95% argon carrier gas at 60 mL/min flow rate. Column temperature held isothermal at 180 °C, except where otherwise indicated.

Column 2 conditions: Supelcoport (100/120 mesh) coated with 3% OV–1 packed in a 1.8 m long × 4 mm ID glass column with 5% methane/95% argon carrier gas at 60 mL/min flow rate. Column temperature held isothermal at 200 °C, except where otherwise indicated.

[a] 220 °C column temperature.

TABLE 2—QC ACCEPTANCE CRITERIA—METHOD 606

Parameter	Test conc. (μg/L)	Limit for s (μg/L)	Range for X (μg/L)	Range for P, P_s (percent)
Bis(2-ethylhexyl) phthalate	50	38.4	1.2–55.9	D–158
Butyl benzyl phthalate	10	4.2	5.7–11.0	30–136
Di-n-butyl phthalate	25	8.9	10.3–29.6	23–136
Diethyl phthalate	25	9.0	1.9–33.4	D–149
Dimethyl phathalate	25	9.5	1.3–35.5	D–156
Di-n-octyl phthalate	50	13.4	D–50.0	D–114

s = Standard deviation of four recovery measurements, in μg/L (Section 8.2.4).
$\bar{X}$ = Average recovery for four recovery measurements, in μg/L (Section 8.2.4).
P, P_s = Percent recovery measured (Section 8.3.2, Section 8.4.2).
D = Detected; result must be greater than zero.

Note: These criteria are based directly upon the method performance data in Table 3. Where necessary, the limits for recovery have been broadened to assure applicability of the limits to concentrations below those used to develop Table 3.

TABLE 3—METHOD ACCURACY AND PRECISION AS FUNCTIONS OF CONCENTRATION—METHOD 606

Parameter	Accuracy, as recovery, X' (μg/L)	Single analyst precision, s_r' (μg/L)	Overall precision, S' (μg/L)
Bis(2-ethylhexyl) phthalate	$0.53C + 2.02$	$0.80\bar{X} - 2.54$	$0.73\bar{X} - 0.17$
Butyl benzyl phthalate	$0.82C + 0.13$	$0.26\bar{X} + 0.04$	$0.25\bar{X} + 0.07$
Di-n-butyl phthalate	$0.79C + 0.17$	$0.23\bar{X} + 0.20$	$0.29\bar{X} + 0.06$
Diethyl phthalate	$0.70C + 0.13$	$0.27\bar{X} + 0.05$	$0.45\bar{X} + 0.11$
Dimethyl phthalate	$0.73C + 0.17$	$0.26\bar{X} + 0.14$	$0.44\bar{X} + 0.31$
Di-n-octyl phthalate	$0.35C - 0.71$	$0.38\bar{X} + 0.71$	$0.62\bar{X} + 0.34$

$\bar{X}'$ = Expected recovery for one or more measurements of a sample containing a concentration of C, in μg/L.
s_r' = Expected single analyst standard deviation of measurements at an average concentration found of $\bar{X}$, in μg/L.
S' = Expected interlaboratory standard deviation of measurements at an average concentration found of $\bar{X}$, in μg/L.
C = True value for the concentration, in μg/L.
$\bar{X}$ = Average recovery found for measurements of samples containing a concentration of C, in μg/L.

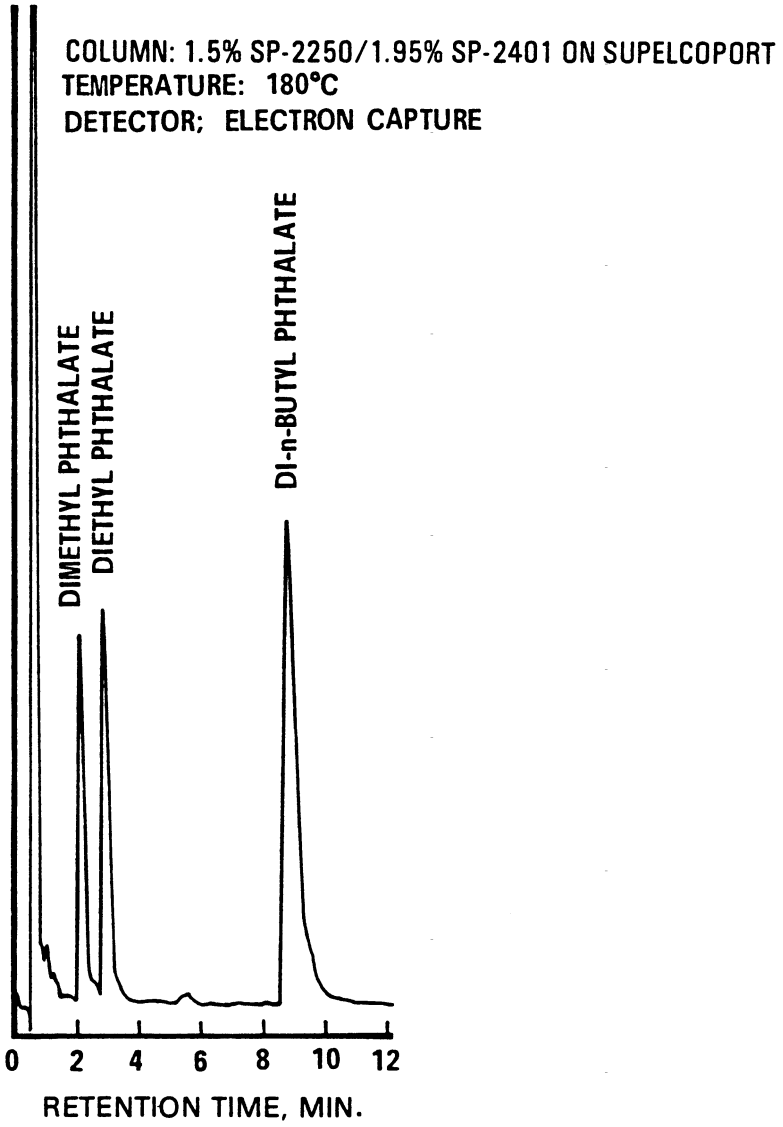

Figure 1. Gas chromatogram of phthalates.

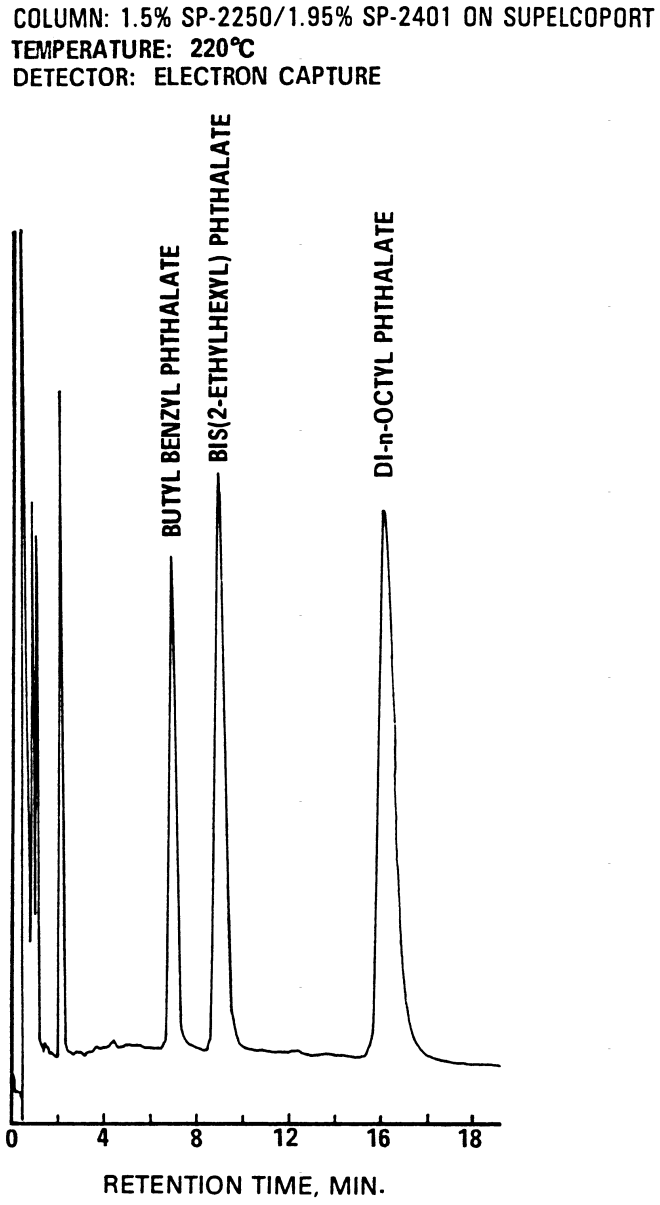

Figure 2. Gas chromatogram of phthalates.

METHOD 607—NITROSAMINES

1. Scope and Application

1.1 This method covers the determination of certain nitrosamines. The following parameters can be determined by this method:

Parameter	Storet No.	CAS No.
N-Nitrosodimethylamine	34438	62–75–9
N-Nitrosodiphenylamine	34433	86–30–6
N-Nitrosodi-n-propylamine	34428	621–64–7

1.2 This is a gas chromatographic (GC) method applicable to the determination of the parameters listed above in municipal and industrial discharges as provided under 40 CFR 136.1. When this method is used to analyze unfamiliar samples for any or all of the compmunds above, compound identifications should be supported by at least one additional qualitative technique. This method describes analytical conditimns for a second gas chromatographic column that can be used to confirm measurements made with the primary column. Method 625 provides gas chromatograph/mass spectrometer (GC/MS) conditions appropriate for the qualitative and quantitative confirmation of results for N-nitrosodi-n-propylamine. In order to confirm the presence of N-nitrosodiphenylamine, the cleanup procedure specified in Section 11.3 or 11.4 must be used. In order to confirm the presence of N-nitrosodimethylamine by GC/MS, Column 1 of this method must be substituted for the column recommended in Method 625. Confirmation of these parameters using GC-high resolution mass spectrometry or a Thermal Energy Analyzer is also recommended.[1 2]

1.3 The method detection limit (MDL, defined in Section 14.1)[3] for each parameter is listed in Table 1. The MDL for a specific wastewater may differ from those listed, depending upon the nature of interferences in the sample matrix.

1.4 Any modification of this method, beyond those expressly permitted, shall be considered as a major modification subject to application and approval of alternate test procedures under 40 CFR 136.4 and 136.5.

1.5 This method is restricted to use by or under the supervision of analysts experienced in the use of a gas chromatograph and in the interpretation of gas chromatograms. Each analyst must demonstrate the ability to generate acceptable results with this method using the procedure described in Section 8.2.

2. Summary of Method

2.1 A measured volume of sample, approximately 1–L, is extracted with methylene chloride using a separatory funnel. The methylene chloride extract is washed with dilute hydrochloric acid to remove free amines, dried, and concentrated to a volume of 10 mL or less. After the extract has been exchanged to methanol, it is separated by gas chromatography and the parameters are then measured with a nitrogen-phosphorus detector.[4]

2.2 The method provides Florisil and alumina column cleanup procedures to separate diphenylamine from the nitrosamines and to aid in the elimination of interferences that may be encountered.

3. Interferences

3.1 Method interferences may be caused by contaminants in solvents, reagents, glassware, and other sample processing hardware that lead to discrete artifacts and/or elevated baselines in gas chromatograms. All of these materials must be routinely demonstrated to be free from interferences under the conditions of the analysis by running laboratory reagent blanks as described in Section 8.1.3.

3.1.1 Glassware must be scrupulously cleaned.[5] Clean all glassware as soon as possible after use by rinsing with the last solvent used in it. Solvent rinsing should be followed by detergent washing with hot water, and rinses with tap water and distilled water. The glassware should then be drained dry, and heated in a muffle furnace at 400 °C for 15 to 30 min. Solvent rinses with acetone and pesticide quality hexane may be substituted for the muffle furnace heating. Volumetric ware should not be heated in a muffle furnace. After drying and cooling, glassware should be sealed and stored in a clean environment to prevent any accumulation of dust or other contaminants. Store inverted or capped with aluminum foil.

3.1.2 The use of high purity reagents and solvents helps to minimize interference problems. Purification of solvents by distillation in all-glass systems may be required.

3.2 Matrix interferences may be caused by contaminants that are co-extracted from the sample. The extent of matrix interferences will vary considerably from source to source, depending upon the nature and diversity of the industrial complex or municipality being sampled. The cleanup procedures in Section 11 can be used to overcome many of these interferences, but unique samples may require additional cleanup approaches to achieve the MDL listed in Table 1.

3.3 N-Nitrosodiphenylamine is reported[6M9] to undergo transnitrosation reactions. Care must be exercised in the heating or concentrating of solutions containing this compound in the presence of reactive amines.

3.4 The sensitive and selective Thermal Energy Analyzer and the reductive Hall detector may be used in place of the nitrogen-phosphorus detector when interferences are encountered. The Thermal Energy Analyzer offers the highest selectivity of the non-MS detectors.

4. Safety

4.1 The toxicity or carcinogenicity of each reagent used in this method has not been precisely defined; however, each chemical compound should be treated as a potential health hazard. From this viewpoint, exposure to these chemicals must be reduced to the lowest possible level by whatever means available. The laboratory is responsible for maintaining a current awareness file of OSHA regulations regarding the safe handling of the chemicals specified in this method. A reference file of material data handling sheets should also be made available to all personnel involved in the chemical analysis. Additional references to laboratory safety are available and have been identified[10M12] for the information of the analyst.

4.2 These nitrosamines are known carcinogens,[13M17] therefore, utmost care must be exercised in the handling of these materials. Nitrosamine reference standards and standard solutions should be handled and prepared in a ventilated glove box within a properly ventilated room.

5. Apparatus and Materials

5.1 Sampling equipment, for discrete or composite sampling.

5.1.1 Grab sample bottle—1–L or 1-qt, amber glass, fitted with a screw cap lined with Teflon. Foil may be substituted for Teflon if the sample is not corrosive. If amber bottles are not available, protect samples from light. The bottle and cap liner must be washed, rinsed with acetone or methylene chloride, and dried before use to minimize contamination.

5.1.2 Automatic sampler (optional)—The sampler must incorporate glass sample containers for the collection of a minimum of 250 mL of sample. Sample containers must be kept refrigerated at 4 °C and protected from light during compositing. If the sampler uses a peristaltic pump, a minimum length of compressible silicone rubber tubing may be used. Before use, however, the compressible tubing should be thoroughly rinsed with methanol, followed by repeated rinsings with distilled water to minimize the potential for contamination of the sample. An integrating flowmeter is required to collect flow proportional composites.

5.2 Glassware (All specifications are suggested. Catalog numbers are included for illustration only.):

5.2.1 Separatory funnels—2–L and 250–mL, with Teflon stopcock.

5.2.2 Drying column—Chromatographic column, approximately 400 mm long × 19 mm ID, with coarse frit filter disc.

5.2.3 Concentrator tube, Kuderna-Danish—10-mL, graduated (Kontes K–570050–1025 or equivalent). Calibration must be checked at the volumes employed in the test. Ground glass stopper is used to prevent evaporation of extracts.

5.2.4 Evaporative flask, Kuderna-Danish—500-mL (Kontes K–570001–0500 or equivalent). Attach to concentrator tube with springs.

5.2.5 Snyder column, Kuderna-Danish—Three-ball macro (Kontes K–503000–0121 or equivalent).

5.2.6 Snyder column, Kuderna-Danish—Two-ball micro (Kontes K–569001–0219 or equivalent).

5.2.7 Vials—10 to 15-mL, amber glass, with Teflon-lined screw cap.

5.2.8 Chromatographic column—Approximately 400 mm long × 22 mm ID, with Teflon stopcock and coarse frit filter disc at bottom (Kontes K–420540–0234 or equivalent), for use in Florisil column cleanup procedure.

5.2.9 Chromatographic column—Approximately 300 mm long × 10 mm ID, with Teflon stopcock and coarse frit filter disc at bottom (Kontes K–420540–0213 or equivalent), for use in alumina column cleanup procedure.

5.3 Boiling chips—Approximately 10/40 mesh. Heat to 400 °C for 30 min or Soxhlet extract with methylene chloride.

5.4 Water bath—Heated, with concentric ring cover, capable of temperature control (±2 °C). The bath should be used in a hood.

5.5 Balance—Analytical, capable of accurately weighing 0.0001 g.

5.6 Gas chromatograph—An analytical system complete with gas chromatograph suitable for on-column injection and all required accessories including syringes, analytical columns, gases, detector, and strip-chart recorder. A data system is recommended for measuring peak areas.

5.6.1 Column 1—1.8 m long × 4 mm ID glass, packed with 10% Carbowax 20 M/2% KOH on Chromosorb W-AW (80/100 mesh) or equivalent. This column was used to develop the method performance statements in Section 14. Guidelines for the use of alternate column packings are provided in Section 12.2.

5.6.2 Column 2—1.8 m long × 4 mm ID glass, packed with 10% SP–2250 on Supelcoport (100/120 mesh) or equivalent.

5.6.3 Detector—Nitrogen-phosphorus, reductive Hall, or Thermal Energy Analyzer detector.[1 2] These detectors have proven effective in the analysis of wastewaters for the parameters listed in the scope (Section 1.1). A nitrogen-phosphorus detector was used to develop the method performance statements in Section 14. Guidelines for the use of alternate detectors are provided in Section 12.2.

6. Reagents

6.1 Reagent water—Reagent water is defined as a water in which an interferent is not observed at the MDL of the parameters of interest.

6.2 Sodium hydroxide solution (10 N)—Dissolve 40 g of NaOH (ACS) in reagent water and dilute to 100 ml.

6.3 Sodium thiosulfate—(ACS) Granular.

6.4 Sulfuric acid (1 + 1)—Slowly, add 50 mL of H_2SO_4 (ACS, sp. gr. 1.84) to 50 mL of reagent water.

6.5 Sodium sulfate—(ACS) Granular, anhydrous. Purify by heating at 400 °C for 4 h in a shallow tray.

6.6 Hydrochloric acid (1 + 9)—Add one volume of concentrated HCl (ACS) to nine volumes of reagent water.

6.7 Acetone, methanol, methylene chloride, pentane—Pesticide quality or equivalent.

6.8 Ethyl ether—Nanograde, redistilled in glass if necessary.

6.8.1 Ethyl ether must be shown to be free of peroxides before it is used as indicated by EM Laboratories Quant test strips. (Available from Scientific Products Co., Cat No. P1126–8, and other suppliers.)

6.8.2 Procedures recommended for removal of peroxides are provided with the test strips. After cleanup, 20 mL of ethyl alcohol preservative must be added to each liter of ether.

6.9 Florisil—PR grade (60/100 mesh). Purchase activated at 1250 °F and store in the dark in glass containers with ground glass stoppers or foil-lined screw caps. Before use, activate each batch at least 16 h at 130 °C in a foil-covered glass container and allow to cool.

6.10 Alumina—Basic activity Super I, W200 series (ICN Life Sciences Group, No. 404571, or equivalent). To prepare for use, place 100 g of alumina into a 500-mL reagent bottle and add 2 mL of reagent water. Mix the alumina preparation thoroughly by shaking or rolling for 10 min and let it stand for at least 2 h. The preparation should be homogeneous before use. Keep the bottle sealed tightly to ensure proper activity.

6.11 Stock standard solutions (1.00 µg/µL)—Stock standard solutions can be prepared from pure standard materials or purchased as certified solutions.

6.11.1 Prepare stock standard solutions by accurately weighing about 0.0100 g of pure material. Dissolve the material in methanol and dilute to volume in a 10-mL volumetric flask. Larger volumes can be used at the convenience of the analyst. When compound purity is assayed to be 96% or greater, the weight can be used without correction to calculate the concentration of the stock standard. Commercially prepared stock standards can be used at any concentration if they are certified by the manufacturer or by an independent source.

6.11.2 Transfer the stock standard solutions into Teflon-sealed screw-cap bottles. Store at 4 °C and protect from light. Stock standard solutions should be checked frequently for signs of degradation or evaporation, especially just prior to preparing calibration standards from them.

6.11.3 Stock standard solutions must be replaced after six months, or sooner if comparison with check standards indicates a problem.

6.12 Quality control check sample concentrate—See Section 8.2.1.

7. Calibration

7.1 Establish gas chromatographic operating conditions equivalent to those given in Table 1. The gas chromatographic system can be calibrated using the external standard technique (Section 7.2) or the internal standard technique (Section 7.3).

7.2 External standard calibration procedure:

7.2.1 Prepare calibration standards at a minimum of three concentration levels for each parameter of interest by adding volumes of one or more stock standards to a volumetric flask and diluting to volume with methanol. One of the external standards should be at a concentration near, but above, the MDL (Table 1) and the other concentrations should correspond to the expected range of concentrations found in real samples or should define the working range of the detector.

7.2.2 Using injections of 2 to 5 µL, analyze each calibration standard according to Section 12 and tabulate peak height or area responses against the mass injected. The results can be used to prepare a calibration curve for each compound. Alternatively, if the ratio of response to amount injected (calibration factor) is a constant over the working range (<10% relative standard deviation, RSD), linearity through the origin can be assumed and the average ratio or calibration factor can be used in place of a calibration curve.

7.3 Internal standard calibration procedure—To use this approach, the analyst must select one or more internal standards that are similar in analytical behavior to the compounds of interest. The analyst must further demonstrate that the measurement of the internal standard is not affected by method or matrix interferences. Because of these limitations, no internal standard can be suggested that is applicable to all samples.

7.3.1 Prepare calibration standards at a minimum of three concentration levels for each parameter of interest by adding volumes of one or more stock standards to a volumetric flask. To each calibration standard, add a known constant amount of one or more internal standards, and dilute to volume with methanol. One of the standards should be at a concentration near, but above, the MDL and the other concentrations should correspond to the expected range of concentrations found in real samples or should define the working range of the detector.

7.3.2 Using injections of 2 to 5 μL, analyze each calibration standard according to Section 12 and tabulate peak height or area responses against concentration for each compound and internal standard. Calculate response factors (RF) for each compound using Equation 1.

$$RF = (A_s)(C_{is}\ (A_{is})(C_s)$$

Equation 1

where:

A_s = Response for the parameter to be measured.

A_{is} = Response for the internal standard.

C_{is} = Concentration of the internal standard (μg/L).

C_s = Concentration of the parameter to be measured (μg/L).

If the RF value over the working range is a constant (<10% RSD), the RF can be assumed to be invariant and the average RF can be used for calculations. Alternatively, the results can be used to plot a calibration curve of response ratios, A_s/A_{is}, vs. RF.

7.4 The working calibration curve, calibration factor, or RF must be verified on each working day by the measurement of one or more calibration standards. If the response for any parameter varies from the predicted response by more than ±15%, a new calibration curve must be prepared for that compound.

7.5 Before using any cleanup procedure, the analyst must process a series of calibration standards through the procedure to validate elution patterns and the absence of interferences from the reagents.

8. Quality Control

8.1 Each laboratory that uses this method is required to operate a formal quality control program. The minimum requirements of this program consist of an initial demonstration of laboratory capability and an ongoing analysis of spiked samples to evaluate and document data quality. The laboratory must maintain records to document the quality of data that is generated. Ongoing data quality checks are compared with established performance criteria to determine if the results of analyses meet the performance characteristics of the method. When results of sample spikes indicate atypical method performance, a quality control check standard must be analyzed to confirm that the measurements were performed in an in-control mode of operation.

8.1.1 The analyst must make an initial, one-time, demonstration of the ability to generate acceptable accuracy and precision with this method. This ability is established as described in Section 8.2.

8.1.2 In recognition of advances that are occurring in chromatography, the analyst is permitted certain options (detailed in Sections 10.4, 11.1, and 12.2) to improve the separations or lower the cost of measurements. Each time such a modification is made to the method, the analyst is required to repeat the procedure in Section 8.2.

8.1.3 Before processing any samples, the analyst must analyze a reagent water blank to demonstrate that interferences from the analytical system and glassware are under control. Each time a set of samples is extracted or reagents are changed, a reagent water blank must be processed as a safeguard against laboratory contamination.

8.1.4 The laboratory must, on an ongoing basis, spike and analyze a minimum of 10% of all samples to monitor and evaluate laboratory data quality. This procedure is described in Section 8.3.

8.1.5 The laboratory must, on an ongoing basis, demonstrate through the analyses of quality control check standards that the operation of the measurement system is in control. This procedure is described in Section 8.4. The frequency of the check standard analyses is equivalent to 10% of all samples analyzed but may be reduced if spike recoveries from samples (Section 8.3) meet all specified quality control criteria.

8.1.6 The laboratory must maintain performance records to document the quality of data that is generated. This procedure is described in Section 8.5.

8.2 To establish the ability to generate acceptable accuracy and precision, the analyst must perform the following operations.

8.2.1 A quality control (QC) check sample concentrate is required containing each parameter of interest at a concentration of 20 μg/mL in methanol. The QC check sample concentrate must be obtained from the U.S. Environmental Protection Agency, Environmental Monitoring and Support Laboratory in Cincinnati, Ohio, if available. If not available from that source, the QC check sample concentrate must be obtained from another external source. If not available from either source above, the QC check sample concentrate must be prepared by the laboratory using stock standards prepared independently from those used for calibration.

8.2.2 Using a pipet, prepare QC check samples at a concentration of 20 μg/L by adding 1.00 mL of QC check sample concentrate to each of four 1–L aliquots of reagent water.

8.2.3 Analyze the well-mixed QC check samples according to the method beginning in Section 10.

8.2.4 Calculate the average recovery ($\bar{X}$) in μg/L, and the standard deviation of the recovery (s) in μg/L, for each parameter using the four results.

8.2.5 For each parameter compare s and $\bar{X}$ with the corresponding acceptance criteria for precision and accuracy, respectively, found in Table 2. If s and $\bar{X}$ for all parameters of interest meet the acceptance criteria, the system performance is acceptable and analysis of actual samples can begin. If

any individual s exceeds the precision limit or any individual $\bar{X}$ falls outside the range for accuracy, the system performance is unacceptable for that parameter. Locate and correct the source of the problem and repeat the test for all parameters of interest beginning with Section 8.2.2.

8.3 The laboratory must, on an ongoing basis, spike at least 10% of the samples from each sample site being monitored to assess accuracy. For laboratories analyzing one to ten samples per month, at least one spiked sample per month is required.

8.3.1 The concentration of the spike in the sample should be determined as follows:

8.3.1.1 If, as in compliance monitoring, the concentration of a specific parameter in the sample is being checked against a regulatory concentration limit, the spike should be at that limit or 1 to 5 times higher than the background concentration determined in Section 8.3.2, whichever concentration would be larger.

8.3.1.2 If the concentration of a specific parameter in the sample is not being checked against a limit specific to that parameter, the spike should be at 20 µg/L or 1 to 5 times higher than the background concentration determined in Section 8.3.2, whichever concentration would be larger.

8.3.1.3 If it is impractical to determine background levels before spiking (e.g., maximum holding times will be exceeded), the spike concentration should be (1) the regulatory concentration limit, if any; or, if none (2) the larger of either 5 times higher than the expected background concentration or 20 µg/L.

8.3.2 Analyze one sample aliquot to determine the background concentration (B) of each parameter. If necessary, prepare a new QC check sample concentrate (Section 8.2.1) appropriate for the background concentrations in the sample. Spike a second sample aliquot with 1.0 mL of the QC check sample concentrate and analyze it to determine the concentration after spiking (A) of each parameter. Calculate each percent recovery (P) as $100(A-B)\%/T$, where T is the known true value of the spike.

8.3.3 Compare the percent recovery (P) for each parameter with the corresponding QC acceptance criteria found in Table 2. These acceptance criteria were caluclated to include an allowance for error in measurement of both the background and spike concentrations, assuming a spike to background ratio of 5:1. This error will be accounted for to the extent that the analyst's spike to background ratio approaches 5:1.[18] If spiking was performed at a concentration lower than 20 µg/L, the analyst must use either the QC acceptance criteria in Table 2, or optional QC acceptance criteria caluclated for the specific spike concentration. To calculate optional acceptance criteria for the recovery of a parameter: (1) Calculate accuracy (X′) using the equation in Table 3, substituting the spike concentration (T) for C; (2) calculate overall precision (S′) using the equation in Table 3, substituting X′ for $\bar{X}$; (3) calculate the range for recovery at the spike concentration as $(100\ X'/T) \pm 2.44(100\ S'/T)\%$.[18]

8.3.4 If any individual P falls outside the designated range for recovery, that parameter has failed the acceptance criteria. A check standard containing each parameter that failed the criteria must be analyzed as described in Section 8.4.

8.4 If any parameter fails the acceptance criteria for recovery in Section 8.3, a QC check standard containing each parameter that failed must be prepared and analyzed.

NOTE: The frequency for the required analysis of a QC check standard will depend upon the number of parameters being simultaneously tested, the complexity of the sample matrix, and the performance of the laboratory.

8.4.1 Prepare the QC check standard by adding 1.0 mL of QC check sample concentrate (Section 8.2.1 or 8.3.2) to 1 L of reagent water. The QC check standard needs only to contain the parameters that failed criteria in the test in Section 8.3.

8.4.2 Analyze the QC check standard to determine the concentration measured (A) of each parameter. Calculate each percent recovery (P_s) as 100 (A/T)%, where T is the true value of the standard concentration.

8.4.3 Compare the percent recovery (P_s) for each parameter with the corresponding QC acceptance criteria found in Table 2. Only parameters that failed the test in Section 8.3 need to be compared with these criteria. If the recovery of any such parameter falls outside the designated range, the laboratory performance for that parameter is judged to be out of control, and the problem must be immediately identified and corrected. The analytical result for that parameter in the unspiked sample is suspect and may not be reported for regulatory compliance purposes.

8.5 As part of the QC program for the laboratory, method accuracy for wastewater samples must be assessed and records must be maintained. After the analysis of five spiked wastewater samples as in Section 8.3, calculate the average percent recovery ($\bar{P}$) and the standard deviation of the percent recovery (s_p). Express the accuracy assessment as a percent recovery interval from $\bar{P} - 2s_p$ to $\bar{P} + 2s_p$. If $\bar{P} = 90\%$ and $s_p = 10\%$, for example, the accuracy interval is expressed as 70–110%. Update the accuracy assessment for each parameter on a regular basis (e.g. after each five to ten new accuracy measurements).

8.6 It is recommended that the laboratory adopt additional quality assurance practices for use with this method. The specific practices that are most productive depend upon the needs of the laboratory and the nature of

the samples. Field duplicates may be analyzed to assess the precision of the environmental measurements. When doubt exists over the identification of a peak on the chromatogram, confirmatory techniques such as gas chromatography with a dissimilar column, specific element detector, or mass spectrometer must be used. Whenever possible, the laboratory should analyze standard reference materials and participate in relevant performance evaluation studies.

9. Sample Collection, Preservation, and Handling

9.1 Grab samples must be collected in glass containers. Conventional sampling practices[19] should be followed, except that the bottle must not be prerinsed with sample before collection. Composite samples should be collected in refrigerated glass containers in accordance with the requirements of the program. Automatic sampling equipment must be as free as possible of Tygon tubing and other potential sources of contamination.

9.2 All samples must be iced or refrigerated at 4 °C from the time of collection until extraction. Fill the sample bottles and, if residual chlorine is present, add 80 mg of sodium thiosulfate per liter of sample and mix well. EPA Methods 330.4 and 330.5 may be used for measurement of residual chlorine.[20] Field test kits are available for this purpose. If N-nitrosodiphenylamine is to be determined, adjust the sample pH to 7 to 10 with sodium hydroxide solution or sulfuric acid.

9.3 All samples must be extracted within 7 days of collection and completely analyzed within 40 days of extraction.[4]

9.4 Nitrosamines are known to be light sensitive.[7] Samples should be stored in amber or foil-wrapped bottles in order to minimize photolytic decomposition.

10. Sample Extraction

10.1 Mark the water meniscus on the side of the sample bottle for later determination of sample volume. Pour the entire sample into a 2–L separatory funnel. Check the pH of the sample with wide-range pH paper and adjust to within the range of 5 to 9 with sodium hydroxide solution or sulfuric acid.

10.2 Add 60 mL of methylene chloride to the sample bottle, seal, and shake 30 s to rinse the inner surface. Transfer the solvent to the separatory funnel and extract the sample by shaking the funnel for 2 min with periodic venting to release excess pressure. Allow the organic layer to separate from the water phase for a minimum of 10 min. If the emulsion interface between layers is more than one-third the volume of the solvent layer, the analyst must employ mechanical techniques to complete the phase separation. The optimum technique depends upon the sample, but may include stirring, filtration of the emulsion through glass wool, centrifugation, or other physical methods. Collect the methylene chloride extract in a 250-mL Erlenmeyer flask.

10.3 Add a second 60-mL volume of methylene chloride to the sample bottle and repeat the extraction procedure a second time, combining the extracts in the Erlenmeyer flask. Perform a third extraction in the same manner.

10.4 Assemble a Kuderna-Danish (K-D) concentrator by attaching a 10-mL concentrator tube to a 500-mL evaporative flask. Other concentration devices or techniques may be used in place of the K-D concentrator if the requirements of Section 8.2 are met.

10.5 Add 10 mL of hydrochloric acid to the combined extracts and shake for 2 min. Allow the layers to separate. Pour the combined extract through a solvent-rinsed drying column containing about 10 cm of anhydrous sodium sulfate, and collect the extract in the K-D concentrator. Rinse the Erlenmeyer flask and column with 20 to 30 mL of methylene chloride to complete the quantitative transfer.

10.6 Add one or two clean boiling chips to the evaporative flask and attach a three-ball Snyder column. Prewet the Snyder column by adding about 1 mL of methylene chloride to the top. Place the K-D apparatus on a hot water bath (60 to 65 °C) so that the concentrator tube is partially immersed in the hot water, and the entire lower rounded surface of the flask is bathed with hot vapor. Adjust the vertical position of the apparatus and the water temperature as required to complete the concentration in 15 to 20 min. At the proper rate of distillation the balls of the column will actively chatter but the chambers will not flood with condensed solvent. When the apparent volume of liquid reaches 1 mL, remove the K-D apparatus and allow it to drain and cool for at least 10 min.

10.7 Remove the Snyder column and rinse the flask and its lower joint into the concentrator tube with 1 to 2 mL of methylene chloride. A 5-mL syringe is recommended for this operation. Stopper the concentrator tube and store refrigerated if further processing will not be performed immediately. If the extract will be stored longer than two days, it should be transferred to a Teflon-sealed screw-cap vial. If N-nitrosodiphenylamine is to be measured by gas chromatography, the analyst must first use a cleanup column to eliminate diphenylamine interference (Section 11). If N-nitrosodiphenylamine is of no interest, the analyst may proceed directly with gas chromatographic analysis (Section 12).

10.8 Determine the original sample volume by refilling the sample bottle to the mark and transferring the liquid to a 1000-mL graduated cylinder. Record the sample volume to the nearest 5 mL.

11. Cleanup and Separation

11.1 Cleanup procedures may not be necessary for a relatively clean sample matrix. If particular circumstances demand the use of a cleanup procedure, the analyst may use either procedure below or any other appropriate procedure. However, the analyst first must demonstrate that the requirements of Section 8.2 can be met using the method as revised to incorporate the cleanup procedure. Diphenylamine, if present in the original sample extract, must be separated from the nitrosamines if N-nitrosodiphenylamine is to be determined by this method.

11.2 If the entire extract is to be cleaned up by one of the following procedures, it must be concentrated to 2.0 mL. To the concentrator tube in Section 10.7, add a clean boiling chip and attach a two-ball micro-Snyder column. Prewet the column by adding about 0.5 mL of methylene chloride to the top. Place the micr-K-D apparatus on a hot water bath (60 to 65 °C) so that the concentrator tube is partially immersed in the hot water. Adjust the vertical position of the apparatus and the water temperature as required to complete the concentration in 5 to 10 min. At the proper rate of distillation the balls of the column will actively chatter but the chambers will not flood. When the apparent volume of liquid reaches about 0.5 mL, remove the K-D apparatus and allow it to drain and cool for at least 10 min. Remove the micro-Snyder column and rinse its lower joint into the concentrator tube with 0.2 mL of methylene chloride. Adjust the final volume to 2.0 mL and proceed with one of the following cleanup procedures.

11.3 Florisil column cleanup for nitrosamines:

11.3.1 Place 22 g of activated Florisil into a 22-mm ID chromatographic column. Tap the column to settle the Florisil and add about 5 mm of anhydrous sodium sulfate to the top.

11.3.2 Preelute the column with 40 mL of ethyl ether/pentane (15 + 85)(V/V). Discard the eluate and just prior to exposure of the sodium sulfate layer to the air, quantitatively transfer the 2-mL sample extract onto the column using an additional 2 mL of pentane to complete the transfer.

11.3.3 Elute the column with 90 mL of ethyl ether/pentane (15 + 85)(V/V) and discard the eluate. This fraction will contain the diphenylamine, if it is present in the extract.

11.3.4 Next, elute the column with 100 mL of acetone/ethyl ether (5 + 95)(V/V) into a 500-mL K-D flask equipped with a 10-mL concentrator tube. This fraction will contain all of the nitrosamines listed in the scope of the method.

11.3.5 Add 15 mL of methanol to the collected fraction and concentrate as in Section 10.6, except use pentane to prewet the column and set the water bath at 70 to 75 °C. When the apparatus is cool, remove the Snyder column and rinse the flask and its lower joint into the concentrator tube with 1 to 2 mL of pentane. Analyze by gas chromatography (Section 12).

11.4 Alumina column cleanup for nitrosamines:

11.4.1 Place 12 g of the alumina preparation (Section 6.10) into a 10-mm ID chromatographic column. Tap the column to settle the alumina and add 1 to 2 cm of anhydrous sodium sulfate to the top.

11.4.2 Preelute the column with 10 mL of ethyl ether/pentane (3 + 7)(V/V). Discard the eluate (about 2 mL) and just prior to exposure of the sodium sulfate layer to the air, quantitatively transfer the 2 mL sample extract onto the column using an additional 2 mL of pentane to complete the transfer.

11.4.3 Just prior to exposure of the sodium sulfate layer to the air, add 70 mL of ethyl ether/pentane (3 + 7)(V/V). Discard the first 10 mL of eluate. Collect the remainder of the eluate in a 500–mL K-D flask equipped with a 10 mL concentrator tube. This fraction contains N-nitrosodiphenylamine and probably a small amount of N-nitrosodi-n-propylamine.

11.4.4 Next, elute the column with 60 mL of ethyl ether/pentane (1 + 1)(V/V), collecting the eluate in a second K-D flask equipped with a 10–mL concentrator tube. Add 15 mL of methanol to the K-D flask. This fraction will contain N-nitrosodimethylamine, most of the N-nitrosodi-n-propylamine and any diphenylamine that is present.

11.4.5 Concentrate both fractions as in Section 10.6, except use pentane to prewet the column. When the apparatus is cool, remove the Snyder column and rinse the flask and its lower joint into the concentrator tube with 1 to 2 mL of pentane. Analyze the fractions by gas chromatography (Section 12).

12. Gas Chromatography

12.1 N-nitrosodiphenylamine completely reacts to form diphenylamine at the normal operating temperatures of a GC injection port (200 to 250 °C). Thus, N-nitrosodiphenylamine is chromatographed and detected as diphenylamine. Accurate determination depends on removal of diphenylamine that may be present in the original extract prior to GC analysis (See Section 11).

12.2 Table 1 summarizes the recommended operating conditions for the gas chromatograph. Included in this table are retention times and MDL that can be achieved under these conditions. Examples of the separations achieved by Column 1 are shown in Figures 1 and 2. Other packed or capillary (open-tubular) columns, chromatographic conditions, or detectors may be used if the requirements of Section 8.2 are met.

12.3 Calibrate the system daily as described in Section 7.

12.4 If the extract has not been subjected to one of the cleanup procedures in Section 11, it is necessary to exchange the solvent from methylene chloride to methanol before the thermionic detector can be used. To a 1 to 10-mL volume of methylene chloride extract in a concentrator tube, add 2 mL of methanol and a clean boiling chip. Attach a two-ball micro-Snyder column to the concentrator tube. Prewet the column by adding about 0.5 mL of methylene chloride to the top. Place the micro-K-D apparatus on a boiling (100 °C) water bath so that the concentrator tube is partially immersed in the hot water. Adjust the vertical position of the apparatus and the water temperature as required to complete the concentration in 5 to 10 min. At the proper rate of distillation the balls of the column will actively chatter but the chambers will not flood. When the apparent volume of liquid reaches about 0.5 mL, remove the K-D apparatus and allow it to drain and cool for at least 10 min. Remove the micro-Snyder column and rinse its lower joint into the concentrator tube with 0.2 mL of methanol. Adjust the final volume to 2.0 mL.

12.5 If the internal standard calibration procedure is being used, the internal standard must be added to the sample extract and mixed thoroughly immediately before injection into the gas chromatograph.

12.6 Inject 2 to 5 µL of the sample extract or standard into the gas chromatograph using the solvent-flush technique.[21] Smaller (1.0 µL) volumes may be injected if automatic devices are employed. Record the volume injected to the nearest 0.05 µL, and the resulting peak size in area or peak height units.

12.7 Identify the parameters in the sample by comparing the retention times of the peaks in the sample chromatogram with those of the peaks in standard chromatograms. The width of the retention time window used to make identifications should be based upon measurements of actual retention time variations of standards over the course of a day. Three times the standard deviation of a retention time for a compound can be used to calculate a suggested window size; however, the experience of the analyst should weigh heavily in the interpretation of chromatograms.

12.8 If the response for a peak exceeds the working range of the system, dilute the extract and reanalyze.

12.9 If the measurement of the peak response is prevented by the presence of interferences, further cleanup is required.

13. Calculations

13.1 Determine the concentration of individual compounds in the sample.

13.1.1 If the external standard calibration procedure is used, calculate the amount of material injected from the peak response using the calibration curve or calibration factor determined in Section 7.2.2. The concentration in the sample can be calculated from Equation 2.

$$\text{Concentration } (\mu g/L) = \frac{(A)(V_t)}{(V_i)(V_s)}$$

Equation 2

where:
A = Amount of material injected (ng).
V_i = Volume of extract injected (µL).
V_t = Volume of total extract (µL).
V_s = Volume of water extracted (mL).

13.1.2 If the internal standard calibration procedure is used, calculate the concentration in the sample using the response factor (RF) determined in Section 7.3.2 and Equation 3.

$$RF = \frac{(A_s)(C_{is})}{(A_{is})(C_s)}$$

Equation 3

where:
A_s = Response for the parameter to be measured.
A_{is} = Response for the internal standard.
I_s = Amount of internal standard added to each extract (µg).
V_o = Volume of water extracted (L).

13.2 Report results in µg/L without correction for recovery data. All QC data obtained should be reported with the sample results.

14. Method Performance

14.1 The method detection limit (MDL) is defined as the minimum concentration of a substance that can be measured and reported with 99% confidence that the value is above zero.[3] The MDL concentrations listed in Table 1 were obtained using reagent water.[22] Similar results were achieved using representative wastewaters. The MDL actually achieved in a given analysis will vary depending on instrument sensitivity and matrix effects.

14.2 This method has been tested for linearity of spike recovery from reagent water and has been demonstrated to be applicable over the concentration range from 4 × MDL to 1000 × MDL.[22]

14.3 This method was tested by 17 laboratories using reagent water, drinking water, surface water, and three industrial wastewaters spiked at six concentrations over the range 0.8 to 55 µg/L.[23] Single operator precision, overall precision, and method accuracy were found to be directly related to the concentration of the parameter and essentially independent of the sample matrix. Linear equations to describe these relationships are presented in Table 3.

References

1. Fine, D.H., Lieb, D., and Rufeh, R. ''Principle of Operation of the Thermal Energy Analyzer for the Trace Analysis of Volatile and Non-volatile N-nitroso Compounds,'' *Journal of Chromatography, 107,* 351 (1975).

2. Fine, D.H., Hoffman, F., Rounbehler, D.P., and Belcher, N.M. ''Analysis of N-nitroso Compounds by Combined High Performance Liquid Chromatography and Thermal Energy Analysis,'' Walker, E.A., Bogovski, P. and Griciute, L., Editors, N-nitroso Compounds—Analysis and Formation, Lyon, International Agency for Research on Cancer (IARC Scientific Publications No. 14), pp. 43–50 (1976).

3. 40 CFR part 136, appendix B.

4. ''Determination of Nitrosamines in Industrial and Municipal Wastewaters,'' EPA 600/4–82–016, National Technical Information Service, PB82–199621, Springfield, Virginia 22161, April 1982.

5. ASTM Annual Book of Standards, Part 31, D3694–78. ''Standard Practices for Preparation of Sample Containers and for Preservation of Organic Constituents,'' American Society for Testing and Materials, Philadelphia.

6. Buglass, A.J., Challis, B.C., and Osborn, M.R. ''Transnitrosation and Decomposition of Nitrosamines,'' Bogovski, P. and Walker, E.A., Editors, N-nitroso Compounds in the Environment, Lyon, International Agency for Research on Cancer (IARC Scientific Publication No. 9), pp. 94–100 (1974).

7. Burgess, E.M., and Lavanish, J.M. ''Photochemical Decomposition of N-nitrosamines,'' *Tetrahedon Letters,* 1221 (1964)

8. Druckrey, H., Preussmann, R., Ivankovic, S., and Schmahl, D. ''Organotrope Carcinogene Wirkungen bei 65 Verschiedenen N-NitrosoVerbindungen an BD-Ratten,'' *Z. Krebsforsch.*, *69*, 103 (1967).

9. Fiddler, W. ''The Occurrence and Determination of N-nitroso Compounds,'' *Toxicol. Appl. Pharmacol.*, *31*, 352 (1975).

10. ''Carcinogens—Working With Carcinogens,'' Department of Health, Education, and Welfare, Public Health Service, Center for Disease Control, National Institute for Occupational Safety and Health, Publication No. 77–206, August 1977.

11. ''OSHA Safety and Health Standards, General Industry,'' (29 CFR Part 1910), Occupational Safety and Health Administration, OSHA 2206 (Revised, January 1976).

12. ''Safety in Academic Chemistry Laboratories,'' American Chemical Society Publication, Committee on Chemical Safety, 3rd Edition, 1979.

13. Lijinsky, W. ''How Nitrosamines Cause Cancer,'' *New Scientist, 73,* 216 (1977).

14. Mirvish, S.S. ''N-Nitroso compounds: Their Chemical and in vivo Formation and Possible Importance as Environmental Carcinogens,'' *J. Toxicol. Environ. Health, 3,* 1267 (1977).

15. ''Reconnaissance of Environmental Levels of Nitrosamines in the Central United States,'' EPA–330/1–77–001, National Enforcement Investigations Center, U.S. Environmental Protection Agency (1977).

16. ''Atmospheric Nitrosamine Assessment Report,'' Office of Air Quality Planning and Standards, U.S. Environmental Protection Agency, Research Triangle Park, North Carolina (1976).

17. ''Scientific and Technical Assessment Report on Nitrosamines,'' EPA–660/6–7–001, Office of Research and Development, U.S. Environmental Protection Agency (1976).

18. Provost, L.P., and Elder, R.S. ''Interpretation of Percent Recovery Data,'' *American Laboratory, 15,* 58–63 (1983). (The value 2.44 used in the equation in Section 8.3.3 is two times the value of 1.22 derived in this report.)

19. ASTM Annual Book of Standards, Part 31, D3370–76. ''Standard Practices for Sampling Water,'' American Society for Testing and Materials, Philadelphia.

20. ''Methods 330.4 (Titrimetric, DPD-FAS) and 330.5 (Spectrophotometric, DPD) for Chlorine, Total Residual,'' Methods for Chemical Analysis of Water and Wastes, EPA–600/4–79–020, U.S. Environmental Protection Agency, Environmental Monitoring and Support Laboratory, Cincinnati, Ohio 45268, March 1979.

21. Burke, J. A. ''Gas Chromatography for Pesticide Residue Analysis; Some Practical Aspects,'' *Journal of the Association of Official Analytical Chemists, 48,* 1037 (1965).

22. ''Method Detection Limit and Analytical Curve Studies EPA Methods 606, 607, and 608,'' Special letter report for EPA Contract 68–03–2606, U.S. Environmental Protection Agency, Environmental Monitoring and Support Laboratory, Cincinnati, Ohio 45268, June 1980.

23. ''EPA Method Study 17 Method 607—Nitrosamines,'' EPA 600/4–84–051, National Technical Information Service, PB84–207646, Springfield, Virginia 22161, June 1984.

TABLE 1—CHROMATOGRAPHIC CONDITIONS AND METHOD DETECTION LIMITS

Parameter	Retention time (min)		Method detection limit (µg/L)
	Column 1	Column 2	
N-Nitrosodimethylamine	4.1	0.88	0.15
N-Nitrosodi-n-propylamine	12.1	4.2	.46

TABLE 1—CHROMATOGRAPHIC CONDITIONS AND METHOD DETECTION LIMITS—Continued

Parameter	Retention time (min)		Method detection limit (μg/L)
	Column 1	Column 2	
N-Nitrosodiphenylamine [a]	[b] 12.8	[c] 6.4	.81

Column 1 conditions: Chromosorb W-AW (80/100 mesh) coated with 10% Carbowax 20 M/2% KOH packed in a 1.8 m long × 4mm ID glass column with helium carrier gas at 40 mL/min flow rate. Column temperature held isothermal at 110 °C, except where otherwise indicated.

Column 2 conditions: Supelcoport (100/120 mesh) coated with 10% SP–2250 packed in a 1.8 m long × 4 mm ID glass column with helium carrier gas at 40 mL/min flow rate. Column temperature held isothermal at 120 °C, except where otherwise indicated.

[a] Measured as diphenylamine.
[b] 220 °C column temperature.
[c] 210 °C column temperature.

TABLE 2—QC ACCEPTANCE CRITERIA—METHOD 607

Parameter	Test conc. (μg/L)	Limit for s (μg/L)	Range for $\bar{X}$ (μg/L)	Range for P, P_s (percent)
N-Nitrosodimethylamine	20	3.4	4.6–20.0	13–109
N-Nitrosodiphenyl	20	6.1	2.1–24.5	D–139
N-Nitrosodi-n-propylamine	20	5.7	11.5–26.8	45–146

s = Standard deviation for four recovery measurements, in μg/L (Section 8.2.4).
$\bar{X}$ = Average recovery for four recovery measurements, in μg/L (Section 8.2.4).
P, P_s = Percent recovery measured (Section 8.3.2, Section 8.4.2).
D = Detected; result must be greater than zero.

NOTE: These criteria are based directly upon the method performance data in Table 3. Where necessary, the limits for recovery have been broadened to assure applicability of the limits to concentrations below those used to develop Table 3.

TABLE 3—METHOD ACCURACY AND PRECISION AS FUNCTIONS OF CONCENTRATION—METHOD 607

Parameter	Accuracy, as recovery, X′ (μg/L)	Single analyst precision, s_r' (μg/L)	Overall precision, S′ (μg/L)
N-Nitrosodimethylamine	0.37C + 0.06	$0.25\bar{X} - 0.04$	$0.25\bar{X} + 0.11$
N-Nitrosodiphenylamine	0.64C + 0.52	$0.36\bar{X} - 1.53$	$0.46\bar{X} - 0.47$
N-Nitrosodi-n-propylamine	0.96C − 0.07	$0.15\bar{X} + 0.13$	$0.21\bar{X} + 0.15$

X′ = Expected recovery for one or more measurements of a sample containing a concentration of C, in μg/L.
s_r' = Expected single analyst standard deviation of measurements at an average concentration found of $\bar{X}$, in μg/L.
S′ = Expected interlaboratory standard deviation of measurements at an average concentration found of $\bar{X}$, in μg/L.
C = True value for the concentration, in μg/L.
$\bar{X}$ = Average recovery found for measurements of samples containing a concentration of C, in μg/L.

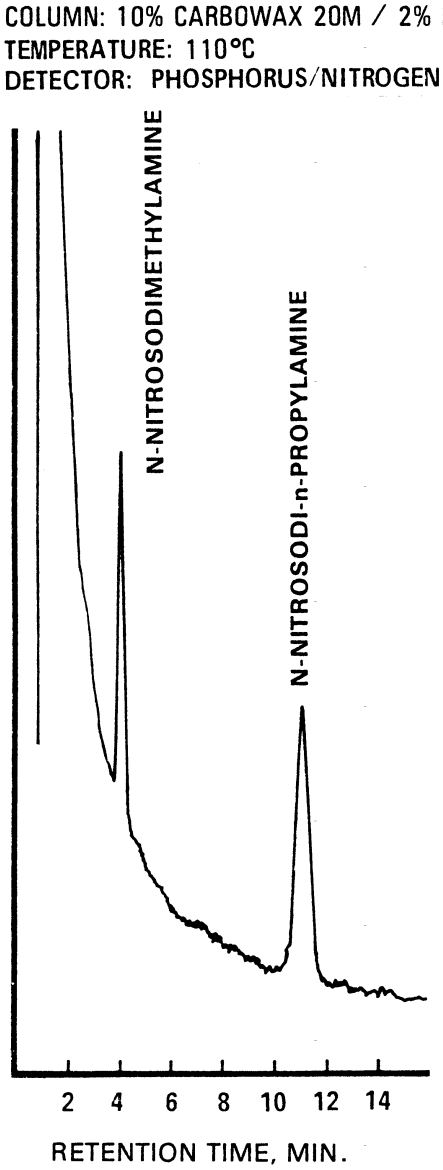

Figure 1. Gas chromatogram of nitrosamines.

COLUMN: 10% CARBOWAX 20M / 2% KOH ON CHROMOSORB W-AW
TEMPERATURE: 220°C
DETECTOR: PHOSPHORUS/NITROGEN

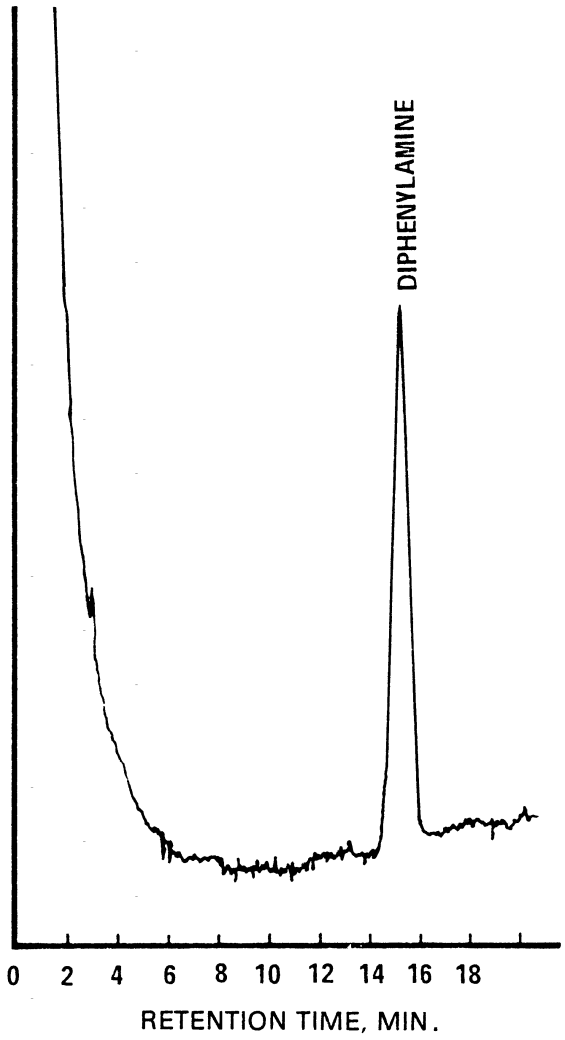

Figure 2. Gas chromatogram of N-nitrosodiphenylamine as diphenylamine.

METHOD 608.3—ORGANOCHLORINE PESTICIDES AND PCBS BY GC/HSD

1. Scope and Application

1.1 This method is for determination of organochlorine pesticides and polychlorinated biphenyls (PCBs) in industrial discharges and other environmental samples by gas chromatography (GC) combined with a halogen-specific detector (HSD; e.g., electron capture, electrolytic conductivity), as provided under 40 CFR 136.1. This revision is based on a previous protocol (Reference 1), on the revision promulgated October 26, 1984, on an inter-laboratory method validation study (Reference 2), and on EPA Method 1656 (Reference 16). The analytes that may be qualitatively and quantitatively determined using this method and their CAS Registry numbers are listed in Table 1.

1.2 This method may be extended to determine the analytes listed in Table 2. However, extraction or gas chromatography challenges for some of these analytes may make quantitative determination difficult.

1.3 When this method is used to analyze unfamiliar samples for an analyte listed in Table 1 or Table 2, analyte identification must be supported by at least one additional qualitative technique. This method gives analytical conditions for a second GC column that can be used to confirm and quantify measurements. Additionally, Method 625.1 provides gas chromatograph/mass spectrometer (GC/MS) conditions appropriate for the qualitative confirmation of results for the analytes listed in Tables 1 and 2 using the extract produced by this method, and Method 1699 (Reference 18) provides high resolution GC/MS conditions for qualitative confirmation of results using the original sample. When such methods are used to confirm the identifications of the target analytes, the quantitative results should be derived from the procedure with the calibration range and sensitivity that are most appropriate for the intended application.

1.4 The large number of analytes in Tables 1 and 2 makes testing difficult if all analytes are determined simultaneously. Therefore, it is necessary to determine and perform quality control (QC) tests for the ''analytes of interest'' only. The analytes of interest are those required to be determined by a regulatory/control authority or in a permit, or by a client. If a list of analytes is not specified, the analytes in Table 1 must be determined, at a minimum, and QC testing must be performed for these analytes. The analytes in Table 1 and some of the analytes in Table 2 have been identified as Toxic Pollutants (40 CFR 401.15), expanded to a list of Priority Pollutants (40 CFR part 423, appendix A).

1.5 In this revision to Method 608, Chlordane has been listed as the alpha- and gamma- isomers in Table 1. Reporting may be by the individual isomers, or as the sum of the concentrations of these isomers, as requested or required by a regulatory/control authority or in a permit. Technical Chlordane is listed in Table 2 and may be used in cases where historical reporting has only been the Technical Chlordane. Toxaphene and the PCBs have been moved from Table 1 to Table 2 (Additional Analytes) to distinguish these analytes from the analytes required in quality control tests (Table 1). QC acceptance criteria for Toxaphene and the PCBs have been retained in Table 4 and may continue to be applied if desired, or if these analytes are requested or required by a regulatory/control authority or in a permit. Method 1668C (Reference 17) may be useful for determination of PCBs as individual chlorinated biphenyl congeners, and Method 1699 (Reference 18) may be useful for determination of the pesticides listed in this method. However, at the time of writing of this revision, Methods 1668C and 1699 had not been approved for use at 40 CFR part 136.

1.6 Method detection limits (MDLs; Reference 3) for the analytes in Tables 1 and some of the analytes in Table 2 are listed in those tables. These MDLs were determined in reagent water (Reference 3). Advances in analytical technology, particularly the use of capillary (open-tubular) columns, allowed laboratories to routinely achieve MDLs for the analytes in this method that are 2–10 times lower than those in the version promulgated in 1984. The MDL for an analyte in a specific wastewater may differ from those listed, depending upon the nature of interferences in the sample matrix.

1.6.1 EPA has promulgated this method at 40 CFR part 136 for use in wastewater compliance monitoring under the National Pollutant Discharge Elimination System (NPDES). The data reporting practices described in section 15.6 are focused on such monitoring needs and may not be relevant to other uses of the method.

1.6.2 This method includes ''reporting limits'' based on EPA's ''minimum level'' (ML) concept (see the glossary in section 23). Tables 1 and 2 contain MDL values and ML values for many of the analytes.

1.7 The separatory funnel and continuous liquid-liquid sample extraction and concentration steps in this method are essentially the same as those steps in Methods 606, 609, 611, and 612. Thus, a single sample may be extracted to measure the analytes included in the scope of each of these methods. Samples may also be extracted using a disk-based solid-phase extraction (SPE) procedure developed by the 3M Corporation and approved by EPA as an Alternate Test Procedure (ATP) for wastewater analyses in 1995 (Reference 20).

1.8 This method is performance-based. It may be modified to improve performance (e.g., to overcome interferences or improve

the accuracy of results) provided all performance requirements are met.

1.8.1 Examples of allowed method modifications are described at 40 CFR 136.6. Other examples of allowed modifications specific to this method are described in section 8.1.2.

1.8.2 Any modification beyond those expressly permitted at 40 CFR 136.6 or in section 8.1.2 of this method shall be considered a major modification subject to application and approval of an alternate test procedure under 40 CFR 136.4 and 136.5.

1.8.3 For regulatory compliance, any modification must be demonstrated to produce results equivalent or superior to results produced by this method when applied to relevant wastewaters (section 8.1.2).

1.9 This method is restricted to use by or under the supervision of analysts experienced in the use of GC/HSD. The laboratory must demonstrate the ability to generate acceptable results with this method using the procedure in section 8.2.

1.10 Terms and units of measure used in this method are given in the glossary at the end of the method.

2. Summary of Method

2.1 A measured volume of sample, the amount required to meet an MDL or reporting limit (nominally 1–L), is extracted with methylene chloride using a separatory funnel, a continuous liquid/liquid extractor, or disk-based solid-phase extraction equipment. The extract is dried and concentrated for cleanup, if required. After cleanup, or if cleanup is not required, the extract is exchanged into an appropriate solvent and concentrated to the volume necessary to meet the required compliance or detection limit, and analyzed by GC/HSD.

2.2 Qualitative identification of an analyte in the extract is performed using the retention times on dissimilar GC columns. Quantitative analysis is performed using the peak areas or peak heights for the analyte on the dissimilar columns with either the external or internal standard technique.

2.3 Florisil®, alumina, a C18 solid-phase cleanup, and an elemental sulfur cleanup procedure are provided to aid in elimination of interferences that may be encountered. Other cleanup procedures may be used if demonstrated to be effective for the analytes in a wastewater matrix.

3. Contamination and Interferences

3.1 Solvents, reagents, glassware, and other sample processing lab ware may yield artifacts, elevated baselines, or matrix interferences causing misinterpretation of chromatograms. All materials used in the analysis must be demonstrated free from contamination and interferences by running blanks initially and with each extraction batch (samples started through the extraction process in a given 24-hour period, to a maximum of 20 samples—see Glossary for detailed definition), as described in section 8.5. Specific selection of reagents and purification of solvents by distillation in all-glass systems may be required. Where possible, labware is cleaned by extraction or solvent rinse, or baking in a kiln or oven.

3.2 Glassware must be scrupulously cleaned (Reference 4). Clean all glassware as soon as possible after use by rinsing with the last solvent used in it. Solvent rinsing should be followed by detergent washing with hot water, and rinses with tap water and reagent water. The glassware should then be drained dry, and heated at 400 °C for 15–30 minutes. Some thermally stable materials, such as PCBs, may require higher temperatures and longer baking times for removal. Solvent rinses with pesticide quality acetone, hexane, or other solvents may be substituted for heating. Do not heat volumetric labware above 90 °C. After drying and cooling, store inverted or capped with solvent-rinsed or baked aluminum foil in a clean environment to prevent accumulation of dust or other contaminants.

3.3 Interferences by phthalate esters can pose a major problem in pesticide analysis when using the electron capture detector. The phthalate esters generally appear in the chromatogram as large late eluting peaks, especially in the 15 and 50% fractions from Florisil®. Common flexible plastics contain varying amounts of phthalates that may be extracted or leached from such materials during laboratory operations. Cross contamination of clean glassware routinely occurs when plastics are handled during extraction steps, especially when solvent-wetted surfaces are handled. Interferences from phthalates can best be minimized by avoiding use of non-fluoropolymer plastics in the laboratory. Exhaustive cleanup of reagents and glassware may be required to eliminate background phthalate contamination (References 5 and 6). Interferences from phthalate esters can be avoided by using a microcoulometric or electrolytic conductivity detector.

3.4 Matrix interferences may be caused by contaminants co-extracted from the sample. The extent of matrix interferences will vary considerably from source to source, depending upon the nature and diversity of the industrial complex or municipality being sampled. Interferences extracted from samples high in total organic carbon (TOC) may result in elevated baselines, or by enhancing or suppressing a signal at or near the retention time of an analyte of interest. Analyses of the matrix spike and matrix spike duplicate (Section 8.3) may be useful in identifying matrix interferences, and the cleanup procedures in Section 11 may aid in eliminating these interferences. EPA has provided guidance that may aid in overcoming matrix

interferences (Reference 7); however, unique samples may require additional cleanup approaches to achieve the MDLs listed in Tables 1 and 2.

4. Safety

4.1 Hazards associated with each reagent used in this method have not been precisely defined; however, each chemical compound should be treated as a potential health hazard. From this viewpoint, exposure to these chemicals must be reduced to the lowest possible level by whatever means available. The laboratory is responsible for maintaining a current awareness file of OSHA regulations regarding the safe handling of the chemicals specified in this method. A reference file of safety data sheets (SDSs, OSHA, 29 CFR 1910.12009(g)) should also be made available to all personnel involved in sample handling and chemical analysis. Additional references to laboratory safety are available and have been identified (References 8 and 9) for the information of the analyst.

4.2 The following analytes covered by this method have been tentatively classified as known or suspected human or mammalian carcinogens: 4,4′-DDT, 4,4′-DDD, the BHCs, and the PCBs. Primary standards of these toxic analytes should be prepared in a chemical fume hood, and a NIOSH/MESA approved toxic gas respirator should be worn when high concentrations are handled.

4.3 This method allows the use of hydrogen as a carrier gas in place of helium (section 5.8.2). The laboratory should take the necessary precautions in dealing with hydrogen, and should limit hydrogen flow at the source to prevent buildup of an explosive mixture of hydrogen in air.

5. Apparatus and Materials

NOTE: Brand names and suppliers are for illustration purposes only. No endorsement is implied. Equivalent performance may be achieved using equipment and materials other than those specified here. Demonstrating that the equipment and supplies used in the laboratory achieve the required performance is the responsibility of the laboratory. Suppliers for equipment and materials in this method may be found through an on-line search. Please do not contact EPA for supplier information.

5.1 Sampling equipment, for discrete or composite sampling.

5.1.1 Grab sample bottle—Amber glass bottle large enough to contain the necessary sample volume (nominally 1 L), fitted with a fluoropolymer-lined screw cap. Foil may be substituted for fluoropolymer if the sample is not corrosive. If amber bottles are not available, protect samples from light. Unless pre-cleaned, the bottle and cap liner must be washed, rinsed with acetone or methylene chloride, and dried before use to minimize contamination.

5.1.2 Automatic sampler (optional)—The sampler must use a glass or fluoropolymer container and tubing for sample collection. If the sampler uses a peristaltic pump, a minimum length of compressible silicone rubber tubing may be used. Before use, rinse the compressible tubing thoroughly with methanol, followed by repeated rinsing with reagent water to minimize the potential for sample contamination. An integrating flow meter is required to collect flow proportional composites. The sample container must be kept refrigerated at ≤6 °C and protected from light during compositing.

5.2. Lab ware.

5.2.1 Extraction.

5.2.1.1 pH measurement.

5.2.1.1.1 pH meter, with combination glass electrode.

5.2.1.1.2 pH paper, wide range (Hydrion Papers, or equivalent).

5.2.1.2 Separatory funnel—Size appropriate to hold the sample and extraction solvent volumes, equipped with fluoropolymer stopcock.

5.2.1.3 Continuous liquid-liquid extractor—Equipped with fluoropolymer or glass connecting joints and stopcocks requiring no lubrication. (Hershberg-Wolf Extractor, Ace Glass Company, Vineland, NJ, or equivalent.)

5.2.1.3.1 Round-bottom flask, 500-mL, with heating mantle.

5.2.1.3.2 Condenser, Graham, to fit extractor.

5.2.1.4 Solid-phase extractor—90-mm filter apparatus (Figure 2) or multi-position manifold.

NOTE: The approved ATP for solid-phase extraction is limited to disk-based extraction media and associated peripheral equipment.

5.2.1.4.1 Vacuum system—Capable of achieving 0.1 bar (25 inch) Hg (house vacuum, vacuum pump, or water aspirator), equipped with shutoff valve and vacuum gauge.

5.2.1.4.2 Vacuum trap—Made from 500-mL sidearm flask fitted with single-hole rubber stopper and glass tubing.

5.2.2 Filtration.

5.2.2.1 Glass powder funnel, 125- to 250-mL.

5.2.2.2 Filter paper for above, Whatman 41, or equivalent.

5.2.2.3 Prefiltering aids—90-mm 1-µm glass fiber filter or Empore® Filter Aid 400.

5.2.3 Drying column.

5.2.3.1 Chromatographic column—Approximately 400 mm long x 15 mm ID, with fluoropolymer stopcock and coarse frit filter disc (Kontes or equivalent).

5.2.3.2 Glass wool—Pyrex, extracted with methylene chloride or baked at 450 °C for 1 hour minimum.

5.2.4 Column for Florisil® or alumina cleanup—Approximately 300 mm long x 10 mm ID, with fluoropolymer stopcock. (This column is not required if cartridges containing Florisil® are used.)

5.2.5 Concentration/evaporation.

NOTE: Use of a solvent recovery system with the K–D or other solvent evaporation apparatus is strongly recommended.

5.2.5.1 Kuderna-Danish concentrator.

5.2.5.1.1 Concentrator tube, Kuderna-Danish—10-mL, graduated (Kontes or equivalent). Calibration must be checked at the volumes employed for extract volume measurement. A ground-glass stopper is used to prevent evaporation of extracts.

5.2.5.1.2 Evaporative flask, Kuderna-Danish—500-mL (Kontes or equivalent). Attach to concentrator tube with connectors.

5.2.5.1.3 Snyder column, Kuderna/Danish—Three-ball macro (Kontes or equivalent).

5.2.5.1.4 Snyder column—Two-ball micro (Kontes or equivalent).

5.2.5.1.5 Water bath—Heated, with concentric ring cover, capable of temperature control (±2 °C), installed in a hood using appropriate engineering controls to limit exposure to solvent vapors.

5.2.5.2 Nitrogen evaporation device—Equipped with heated bath that can be maintained at an appropriate temperature for the solvent and analytes. (N-Evap, Organomation Associates, Inc., or equivalent).

5.2.5.3 Rotary evaporator—Buchi/Brinkman-American Scientific or equivalent, equipped with a variable temperature water bath, vacuum source with shutoff valve at the evaporator, and vacuum gauge.

5.2.5.3.1 A recirculating water pump and chiller are recommended, as use of tap water for cooling the evaporator wastes large volumes of water and can lead to inconsistent performance as water temperatures and pressures vary.

5.2.5.3.2 Round-bottom flask—100-mL and 500-mL or larger, with ground-glass fitting compatible with the rotary evaporator

NOTE: This equipment is used to prepare copper foil or copper powder for removing sulfur from sample extracts (see Section 6.7.4).

5.2.5.4 Automated concentrator—Equipped with glassware sufficient to concentrate 3–400 mL extract to a final volume of 1–10 mL under controlled conditions of temperature and nitrogen flow (Turbovap, or equivalent). Follow manufacturer's directions and requirements.

5.2.5.5 Boiling chips—Glass, silicon carbide, or equivalent, approximately 10/40 mesh. Heat at 400 °C for 30 minutes, or solvent rinse or Soxhlet extract with methylene chloride.

5.2.6 Solid-phase extraction disks—90-mm extraction disks containing 2 g of 8-µm octadecyl (C18) bonded silica uniformly enmeshed in a matrix of inert PTFE fibrils (3M Empore® or equivalent). The disks should not contain any organic compounds, either from the PTFE or the bonded silica, which will leach into the methylene chloride eluant. One liter of reagent water should pass through the disks in 2–5 minutes, using a vacuum of at least 25 inches of mercury.

NOTE: Extraction disks from other manufacturers may be used in this procedure, provided that they use the same solid-phase materials (*i.e.*, octadecyl bonded silica). Disks of other diameters also may be used, but may adversely affect the flow rate of the sample through the disk.

5.3 Vials.

5.3.1 Extract storage—10- to 15-mL, amber glass, with fluoropolymer-lined screw cap.

5.3.2 GC autosampler—1- to 5-mL, amber glass, with fluoropolymer-lined screw- or crimp-cap, to fit GC autosampler.

5.4 Balances.

5.4.1 Analytical—Capable of accurately weighing 0.1 mg.

5.4.2 Top loading—Capable of weighing 10 mg.

5.5 Sample cleanup.

5.5.1 Oven—For baking and storage of adsorbents, capable of maintaining a constant temperature (±5 °C) in the range of 105–250 °C.

5.5.2 Muffle furnace—Capable of cleaning glassware or baking sodium sulfate in the range of 400–450 °C.

5.5.3 Vacuum system and cartridges for solid-phase cleanup (see Section 11.2).

5.5.3.1 Vacuum system—Capable of achieving 0.1 bar (25 in.) Hg (house vacuum, vacuum pump, or water aspirator), equipped with shutoff valve and vacuum gauge.

5.5.3.2 VacElute Manifold (Analytichem International, or equivalent).

5.5.3.3 Vacuum trap—Made from 500-mL sidearm flask fitted with single-hole rubber stopper and glass tubing.

5.5.3.4 Rack for holding 50-mL volumetric flasks in the manifold.

5.5.3.5 Cartridge—Mega Bond Elute, Nonpolar, C18 Octadecyl, 10 g/60 mL (Analytichem International or equivalent), used for solid-phase cleanup of sample extracts (see Section 11.2).

5.5.4 Sulfur removal tube—40- to 50-mL bottle, test tube, or Erlenmeyer flask with fluoropolymer-lined screw cap.

5.6 Centrifuge apparatus.

5.6.1 Centrifuge—Capable of rotating 500-mL centrifuge bottles or 15-mL centrifuge tubes at 5,000 rpm minimum.

5.6.2 Centrifuge bottle—500-mL, with screw cap, to fit centrifuge.

5.6.3 Centrifuge tube—15-mL, with screw cap, to fit centrifuge.

5.7 Miscellaneous lab ware—Graduated cylinders, pipettes, beakers, volumetric flasks, vials, syringes, and other lab ware

necessary to support the operations in this method.

5.8 Gas chromatograph—Dual-column with simultaneous split/splitless, temperature programmable split/splitless (PTV), or on-column injection; temperature program with isothermal holds, and all required accessories including syringes, analytical columns, gases, and detectors. An autosampler is highly recommended because it injects volumes more reproducibly than manual injection techniques. Alternatively, two separate single-column gas chromatographic systems may be employed.

5.8.1 Example columns and operating conditions.

5.8.1.1 DB–608 (or equivalent), 30-m long x 0.53-mm ID fused-silica capillary, 0.83-µm film thickness.

5.8.1.2 DB–1701 (or equivalent), 30-m long x 0.53-mm ID fused-silica capillary, 1.0-µm film thickness.

5.8.1.3 Suggested operating conditions used to meet the retention times shown in Table 3 are:

(a) Carrier gas flow rate: Approximately 7 mL/min,

(b) Initial temperature: 150 °C for 0.5 minute,

(c) Temperature program: 150–270 °C at 5 °C/min, and

(d) Final temperature: 270 °C, until *trans*-Permethrin elutes.

NOTE: Other columns, internal diameters, film thicknesses, and operating conditions may be used, provided that the performance requirements in this method are met. However, the column pair chosen must have dissimilar phases/chemical properties in order to separate the compounds of interest in different retention time order. Columns that only differ in the length, ID, or film thickness, but use the same stationary phase do not qualify as ''dissimilar.''

5.8.2 Carrier gas—Helium or hydrogen. Data in the tables in this method were obtained using helium carrier gas. If hydrogen is used, analytical conditions may need to be adjusted for optimum performance, and calibration and all QC tests must be performed with hydrogen carrier gas. See Section 4.3 for precautions regarding the use of hydrogen as a carrier gas.

5.8.3 Detector—Halogen-specific detector (electron capture detector [ECD], electrolytic conductivity detector [ELCD], or equivalent). The ECD has proven effective in the analysis of wastewaters for the analytes listed in Tables 1 and 2, and was used to develop the method performance data in Section 17 and Tables 4 and 5.

5.8.4 Data system—A computer system must be interfaced to the GC that allows continuous acquisition and storage of data from the detectors throughout the chromatographic program. The computer must have software that allows searching GC data for specific analytes, and for plotting responses versus time. Software must also be available that allows integrating peak areas or peak heights in selected retention time windows and calculating concentrations of the analytes.

6. Reagents and Standards

6.1 pH adjustment.

6.1.1 Sodium hydroxide solutions.

6.1.1.1 Concentrated (10 M)—Dissolve 40 g of NaOH (ACS) in reagent water and dilute to 100 mL.

6.1.1.2 Dilute (1 M)—Dissolve 40 g NaOH in 1 L of reagent water.

6.1.2 Sulfuric acid (1+1)—Slowly add 50 mL of H_2SO_4 (ACS, sp. gr. 1.84) to 50 mL of reagent water.

6.1.3 Hydrochloric acid—Reagent grade, 6 N.

6.2 Sodium thiosulfate—(ACS) granular.

6.3 Sodium sulfate—Sodium sulfate, reagent grade, granular anhydrous (Baker or equivalent), rinsed with methylene chloride, baked in a shallow tray at 450 °C for 1 hour minimum, cooled in a desiccator, and stored in a pre-cleaned glass bottle with screw cap which prevents moisture from entering. If, after heating, the sodium sulfate develops a noticeable grayish cast (due to the presence of carbon in the crystal matrix), that batch of reagent is not suitable for use and should be discarded. Extraction with methylene chloride (as opposed to simple rinsing) and baking at a lower temperature may produce sodium sulfate suitable for use.

6.4 Reagent water—Reagent water is defined as water in which the analytes of interest and interfering compounds are not observed at the MDLs of the analytes in this method.

6.5 Solvents—Methylene chloride, acetone, methanol, hexane, acetonitrile, and isooctane, high purity pesticide quality, or equivalent, demonstrated to be free of the analytes and interferences (section 3). Purification of solvents by distillation in all-glass systems may be required.

NOTE: The standards and final sample extracts must be prepared in the same final solvent.

6.6 Ethyl ether—Nanograde, redistilled in glass if necessary. Ethyl ether must be shown to be free of peroxides before use, as indicated by EM Laboratories Quant test strips (available from Scientific Products Co. and other suppliers). Procedures recommended for removal of peroxides are provided with the test strips. After removal of peroxides, add 20 mL of ethyl alcohol preservative to each liter of ether.

6.7 Materials for sample cleanup.

6.7.1 Florisil®—PR grade (60/100 mesh), activated at 650–700 °C, stored in the dark in a glass container with fluoropolymer-lined

screw cap. Activate each batch immediately prior to use for 16 hours minimum at 130 °C in a foil-covered glass container and allow to cool. Alternatively, 500 mg cartridges (J.T. Baker, or equivalent) may be used.

6.7.1.1 Cartridge certification—Each cartridge lot must be certified to ensure recovery of the analytes of interest and removal of 2,4,6-trichlorophenol. To make the test mixture, add the trichlorophenol solution (section 6.7.1.3) to the same standard used to prepare the Quality Control Check Sample (section 6.8.3). Transfer the mixture to the column and dry the column. Pre-elute with three 10-mL portions of elution solvent, drying the column between elutions. Elute the cartridge with 10 mL each of methanol and water, as in section 11.2.3.3.

6.7.1.2 Concentrate the eluant to per section 10.3.3, exchange to isooctane or hexane per section 10.3.3, and inject 1.0 µL of the concentrated eluant into the GC using the procedure in section 12. The recovery of all analytes (including the unresolved GC peaks) shall be within the ranges for calibration verification (section 13.6 and Table 4), the recovery of trichlorophenol shall be less than 5%, and no peaks interfering with the target analytes shall be detected. Otherwise the Florisil cartridge is not performing properly and the cartridge lot shall be rejected.

6.7.1.3 Florisil cartridge calibration solution—2,4,6-Trichlorophenol, 0.1 µg/mL in acetone.

6.7.2 SPE elution solvent—Methylene chloride:acetonitrile:hexane (50:3:47).

6.7.3 Alumina, neutral, Brockman Activity I, 80–200 mesh (Fisher Scientific certified, or equivalent). Heat in a glass bottle for 16 hours at 400 to 450 °C. Seal and cool to room temperature. Add 7% (w/w) reagent water and mix for 10 to 12 hours. Keep bottle tightly sealed.

6.7.4 Sulfur removal.

6.7.4.1 Copper foil or powder—Fisher, Alfa Aesar, or equivalent. Cut copper foil into approximately 1-cm squares. Copper must be activated before it may be used, as described below.

6.7.4.1.1 Place the quantity of copper needed for sulfur removal (section 11.5.1.3) in a ground-glass-stoppered Erlenmeyer flask or bottle. Cover the foil or powder with methanol.

6.7.4.1.2 Add HCl dropwise (0.5–1.0 mL) while swirling, until the copper brightens.

6.7.4.1.3 Pour off the methanol/HCl and rinse 3 times with reagent water to remove all traces of acid, then 3 times with acetone, then 3 times with hexane.

6.7.4.1.4 For copper foil, cover with hexane after the final rinse. Store in a stoppered flask under nitrogen until used. For the powder, dry on a rotary evaporator. Store in a stoppered flask under nitrogen until used. Inspect the copper foil or powder before each use. It must have a bright, non-oxidized appearance to be effective. Copper foil or powder that has oxidized may be reactivated using the procedure described above.

6.7.4.2 Tetrabutylammonium sulfite (TBA sulfite)—Prepare as described below.

6.7.4.2.1 Tetrabutylammonium hydrogen sulfate, $[CH_3(CH_2)_3]_4NHSO_4$.

6.7.4.2.2 Sodium sulfite, Na_2SO_3.

6.7.4.2.3 Dissolve approximately 3 g tetrabutylammonium hydrogen sulfate in 100 mL of reagent water in an amber bottle with fluoropolymer-lined screw cap. Extract with three 20-mL portions of hexane and discard the hexane extracts.

6.7.4.2.4 Add 25 g sodium sulfite to produce a saturated solution. Store at room temperature. Replace after 1 month.

6.7.5 Sodium chloride—Reagent grade, prepare at 5% (w/v) solution in reagent water.

6.8 Stock standard solutions—Stock standard solutions may be prepared from pure materials, or purchased as certified solutions. Traceability must be to the National Institute of Standards and Technology (NIST) or other national or international standard, when available. Stock solution concentrations alternative to those below may be used. Because of the toxicity of some of the compounds, primary dilutions should be prepared in a hood, and a NIOSH/MESA approved toxic gas respirator should be worn when high concentrations of neat materials are handled. The following procedure may be used to prepare standards from neat materials.

6.8.1 Accurately weigh about 0.0100 g of pure material in a 10-mL volumetric flask. Dilute to volume in pesticide quality hexane, isooctane, or other suitable solvent. Larger volumes may be used at the convenience of the laboratory. When compound purity is assayed to be 96% or greater, the weight may be used without correction to calculate the concentration of the stock standard. Commercially prepared stock standards may be used at any concentration if they are certified by the manufacturer or by an independent source.

6.8.1.1 Unless stated otherwise in this method, store non-aqueous standards in fluoropolymer-lined screw-cap, or heat-sealed, glass containers, in the dark at −20 to −10 °C. Store aqueous standards; e.g., the aqueous LCS (section 8.4), in the dark at ≤6 °C, but do not freeze.

6.8.1.2 Standards prepared by the laboratory may be stored for up to one year, except when comparison with QC check standards indicates that a standard has degraded or become more concentrated due to evaporation, or unless the laboratory has data on file to prove stability for a longer period. Commercially prepared standards may be stored until the expiration date provided by the vendor, except when comparison with QC check standards indicates that a standard

has degraded or become more concentrated due to evaporation, or unless the laboratory has data from the vendor on file to prove stability for a longer period.

6.8.2 Calibration solutions—It is necessary to prepare calibration solutions for the analytes of interest (section 1.4) only using an appropriate solvent (isooctane or hexane may be used). Whatever solvent is used, both the calibration standards and the final sample extracts must use the same solvent. Other analytes may be included as desired.

6.8.2.1 Prepare calibration standards for the single-component analytes of interest and surrogates at a minimum of three concentration levels (five are suggested) by adding appropriate volumes of one or more stock standards to volumetric flasks. One of the calibration standards should be at a concentration at or below the ML specified in Table 1, or 2, or as specified by a regulatory/control authority or in a permit. The ML value may be rounded to a whole number that is more convenient for preparing the standard, but must not exceed the ML value listed in Tables 1 or 2 for those analytes which list ML values. Alternatively, the laboratory may establish an ML for each analyte based on the concentration of the lowest calibration standard in a series of standards produced by the laboratory or obtained from a commercial vendor, again, provided that the ML does not exceed the ML in Table 1 and 2, and provided that the resulting calibration meets the acceptance criteria in section 7.5.2 based on the RSD, RSE, or R^2.

(a) The other concentrations should correspond to the expected range of concentrations found in real samples or should define the working range of the GC system. A minimum of six concentration levels is required for a second order, non-linear (e.g., quadratic; $ax^2 + bx + c = 0$) calibration (section 7.5.2 or 7.6.2). Calibrations higher than second order are not allowed. A separate standard near the MDL may be analyzed as a check on sensitivity, but should not be included in the linearity assessment. The solvent for the standards must match the final solvent for the sample extracts (e.g., isooctane or hexane).

NOTE: The option for non-linear calibration may be necessary to address specific instrumental techniques. However, it is not EPA's intent to allow non-linear calibration to be used to compensate for detector saturation or to avoid proper instrument maintenance.

(b) Given the number of analytes included in this method, it is highly likely that some will coelute on one or both of the GC columns used for the analysis. Divide the analytes into two or more groups and prepare separate calibration standards for each group, at multiple concentrations (e.g., a five-point calibration will require ten solutions to cover two groups of analytes). Table 7 provides information on dividing the target analytes into separate calibration mixtures that should minimize or eliminate co-elutions. This table is provided solely as guidance, based on the GC columns suggested in this method. If an analyte listed in Table 7 is not an analyte of interest in a given laboratory setting, then it need not be included in a calibration mixture.

NOTE: Many commercially available standards are divided into separate mixtures to address this issue.

(c) If co-elutions occur in analysis of a sample, a co-elution on one column is acceptable so long as effective separation of the co-eluting compounds can be achieved on the second column.

6.8.2.2 Multi-component analytes (e.g., PCBs as Aroclors, and Toxaphene).

6.8.2.2.1 A standard containing a mixture of Aroclor 1016 and Aroclor 1260 will include many of the peaks represented in the other Aroclor mixtures. As a result, a multi-point initial calibration employing a mixture of Aroclors 1016 and 1260 at three to five concentrations should be sufficient to demonstrate the linearity of the detector response without the necessity of performing multi-point initial calibrations for each of the seven Aroclors. In addition, such a mixture can be used as a standard to demonstrate that a sample does not contain peaks that represent any one of the Aroclors. This standard can also be used to determine the concentrations of either Aroclor 1016 or Aroclor 1260, should they be present in a sample. Therefore, prepare a minimum of three calibration standards containing equal concentrations of both Aroclor 1016 and Aroclor 1260 by dilution of the stock standard with isooctane or hexane. The concentrations should correspond to the expected range of concentrations found in real samples and should bracket the linear range of the detector.

6.8.2.2.2 Single standards of each of the other five Aroclors are required to aid the analyst in pattern recognition. Assuming that the Aroclor 1016/1260 standards described in Section 6.8.2.2.1 have been used to demonstrate the linearity of the detector, these single standards of the remaining five Aroclors also may be used to determine the calibration factor for each Aroclor. Prepare a standard for each of the other Aroclors. The concentrations should generally correspond to the mid-point of the linear range of the detector, but lower concentrations may be employed at the discretion of the analyst based on project requirements.

6.8.2.2.3 For Toxaphene, prepare a minimum of three calibration standards containing Toxaphene by dilution of the stock

standard with isooctane or hexane. The concentrations should correspond to the expected range of concentrations found in real samples and should bracket the linear range of the detector.

6.8.3 Quality Control (QC) Check Sample Concentrate—Prepare one or more mid-level standard mixtures (concentrates) in acetone (or other water miscible solvent). The concentrate is used as the spiking solution with which to prepare the Demonstration of Capabilities (DOC) samples, the Laboratory Control Sample (LCS), and Matrix Spike (MS) and Matrix Spike Duplicate (MSD) samples described in section 8. If prepared by the laboratory (as opposed the purchasing it from a commercial supplier), the concentrate must be prepared independently from the standards used for calibration, but may be prepared from the same source as the second-source standard used for calibration verification (section 7.7). Regardless of the source, the concentrate must be in a water-miscible solvent, as noted above. The concentrate is used to prepare the DOC and LCS (sections 8.2.1 and 8.4) and MS/MSD samples (section 8.3). Depending on the analytes of interest for a given sample (see Section 1.4), multiple solutions and multiple LCS or MS/MSD samples may be required to account for co-eluting analytes. However, a co-elution on one column is acceptable so long as effective separation of the co-eluting compounds can be achieved on the second column. In addition, the concentrations of the MS/MSD samples should reflect any relevant compliance limits for the analytes of interest, as described in section 8.3.1. If a custom spiking solution is required for a specific discharge (section 8.3.1), prepare it separately from the DOC and LCS solution.

NOTE: Some commercially available standards are divided into separate mixtures to address the co-elution issue.

6.8.4 Calibration Verification Standards—In order to verify the results of the initial calibration standards, prepare one or more mid-level standard mixtures in isooctane or hexane, using standards obtained from a second source (different manufacturer or different certified lot from the calibration standards). These standards will be analyzed to verify the accuracy of the calibration (sections 7.7 and 13.6.2). As with the QC sample concentrate in section 6.8.3, multiple solutions may be required to address co-elutions among all of the analytes.

6.8.5 Internal standard solution—If the internal standard calibration technique is to be used, prepare pentachloronitrobenzene (PCNB) at a concentration of 10 µg/mL in ethyl acetate. Alternative and multiple internal standards; e.g., tetrachloro-*m*-xylene, 4,4′-dibromobiphenyl, and/or decachlorobiphenyl may be used provided that the laboratory performs all QC tests and meets all QC acceptance criteria with the alternative or additional internal standard(s) as an integral part of this method.

6.8.6 Surrogate solution—Prepare a solution containing one or more surrogates at a concentration of 2 µg/mL in acetone. Potential surrogates include: dibutyl chlorendate (DBC), tetrachloro-*m*-xylene (TCMX), 4,4′-dibromobiphenyl, or decachlorobiphenyl. Alternative surrogates and concentrations may be used, provided the laboratory performs all QC tests and meets all QC acceptance criteria with the alternative surrogate(s) as an integral part of this method. If the internal standard calibration technique is used, do not use the internal standard as a surrogate.

6.8.7 DDT and endrin decomposition (breakdown) solution—Prepare a solution containing endrin at a concentration of 50 ng/mL and 4,4'-DDT at a concentration of 100 ng/mL, in isooctane or hexane. A 1-µL injection of this standard will contain 50 picograms (pg) of endrin and 100 pg of DDT. The concentration of the solution may be adjusted by the laboratory to accommodate other injection volumes such that the same masses of the two analytes are introduced into the instrument.

7. Calibration

7.1 Establish gas chromatographic operating conditions equivalent to those in Section 5.8.1 and Footnote 2 to Table 3. Alternative temperature program and flow rate conditions may be used. The system may be calibrated using the external standard technique (section 7.5) or the internal standard technique (section 7.6). It is necessary to calibrate the system for the analytes of interest (section 1.4) only.

7.2 Separately inject the mid-level calibration standard for each calibration mixture. Store the retention time on each GC column.

7.3 Injection of calibration solutions—Inject a constant volume in the range of 0.5 to 2.0 µL of each calibration solution into the GC column/detector pairs. An alternative volume (see Section 12.3) may be used provided all requirements in this method are met. Beginning with the lowest level mixture and proceeding to the highest level mixture may limit the risk of carryover from one standard to the next, but other sequences may be used. An instrument blank should be analyzed after the highest standard to demonstrate that there is no carryover within the system for this calibration range.

7.4 For each analyte, compute, record, and store, as a function of the concentration injected, the retention time and peak area on each column/detector system. If multicomponent analytes are to be analyzed, store the retention time and peak area for the three to five exclusive (unique large) peaks

for each PCB or technical chlordane. Use four to six peaks for toxaphene.

7.5 External standard calibration.

7.5.1 From the calibration data (Section 7.4), calculate the calibration factor (CF) for each analyte at each concentration according to the following equation:

$$CF = \frac{A_s}{C_s}$$

Where:

C_s = Concentration of the analyte in the standard (ng/mL)

A_s = Peak height or area

For multi-component analytes, choose a series of characteristic peaks for each analyte (3 to 5 for each Aroclor, 4 to 6 for toxaphene) and calculate individual calibration factors for each peak. Alternatively, for toxaphene, sum the areas of all of the peaks in the standard chromatogram and use the summed area to determine the calibration factor. (If this alternative is used, the same approach must be used to quantitate the analyte in the samples.)

7.5.2 Calculate the mean (average) and relative standard deviation (RSD) of the calibration factors. If the RSD is less than 20%, linearity through the origin can be assumed and the average CF can be used for calculations. Alternatively, the results can be used to fit a linear or quadratic regression of response, A_s, vs. concentration C_s. If used, the regression must be weighted inversely proportional to concentration. The coefficient of determination (R^2) of the weighted regression must be greater than 0.920. Alternatively, the relative standard error (Reference 10) may be used as an acceptance criterion. As with the RSD, the RSE must be less than 20%. If an RSE less than 20% cannot be achieved for a quadratic regression, system performance is unacceptable and the system must be adjusted and re-calibrated.

NOTE: Regression calculations are not included in this method because the calculations are cumbersome and because many GC/ECD data systems allow selection of weighted regression for calibration and calculation of analyte concentrations.

7.6 Internal standard calibration.

7.6.1 From the calibration data (Section 7.4), calculate the response factor (RF) for each analyte at each concentration according to the following equation:

$$RF = \frac{(A_s \text{ x } C_{is})}{(A_{is} \text{ x } C_s)}$$

Where:

A_s = Response for the analyte to be measured.

A_{is} = Response for the internal standard.

C_{is} = Concentration of the internal standard (ng/mL)

C_s = Concentration of the analyte to be measured (ng/mL).

7.6.2 Calculate the mean (average) and relative standard deviation (RSD) of the response factors. If the RSD is less than 15%, linearity through the origin can be assumed and the average RF can be used for calculations. Alternatively, the results can be used to prepare a calibration curve of response ratios, A_s/A_{is}, vs. concentration ratios, C_s/C_{is}, for the analyte. A minimum of six concentration levels is required for a non-linear (e.g., quadratic) regression. If used, the regression must be weighted inversely proportional to concentration, and the coefficient of determination of the weighted regression must be greater than 0.920. Alternatively, the relative standard error (Reference 10) may be used as an acceptance criterion. As with the RSD, the RSE must be less than 15%. If an RSE less than 15% cannot be achieved for a quadratic regression, system performance is unacceptable and the system must be adjusted and re-calibrated.

7.7 The working calibration curve, CF, or RF must be verified immediately after calibration and at the beginning and end of each 24-hour shift by the analysis of a mid-level calibration standard. The calibration verification standard(s) must be obtained from a second manufacturer or a manufacturer's batch prepared independently from the batch used for calibration (Section 6.8.4). Requirements for calibration verification are given in Section 13.6 and Table 4. Alternatively, calibration verification may be performed after a set number of injections

(e.g., every 20 injections), to include injection of extracts of field samples, QC samples, instrument blanks, etc. (*i.e.*, it is based on the number of injections performed, not sample extracts). The time for the injections may not exceed 24 hours.

NOTE: The 24-hour shift begins after analysis of the combined QC standard (calibration verification) and ends 24 hours later. The ending calibration verification standard is run immediately after the last sample run during the 24-hour shift, so the beginning and ending calibration verifications are outside of the 24-hour shift. If calibration verification is based on the number of injections instead of time, then the ending verification standard for one group of injections may be used as the beginning verification for the next group of injections.

7.8 Florisil® calibration—The column cleanup procedure in Section 11.3 utilizes Florisil column chromatography. Florisil® from different batches or sources may vary in adsorptive capacity. To standardize the amount of Florisil® which is used, use of the lauric acid value (Reference 11) is suggested. The referenced procedure determines the adsorption from a hexane solution of lauric acid (mg) per g of Florisil®. The amount of Florisil® to be used for each column is calculated by dividing 110 by this ratio and multiplying by 20 g. If cartridges containing Florisil® are used, then this step is not necessary.

8. Quality Control

8.1 Each laboratory that uses this method is required to operate a formal quality assurance program. The minimum requirements of this program consist of an initial demonstration of laboratory capability and ongoing analysis of spiked samples and blanks to evaluate and document data quality. The laboratory must maintain records to document the quality of data generated. Ongoing data quality checks are compared with established performance criteria to determine if the results of analyses meet performance requirements of this method. A quality control check standard (LCS, section 8.4) must be prepared and analyzed with each batch of samples to confirm that the measurements were performed in an in-control mode of operation. A laboratory may develop its own performance criteria (as QC acceptance criteria), provided such criteria are as or more restrictive than the criteria in this method.

8.1.1 The laboratory must make an initial demonstration of the capability (IDC) to generate acceptable precision and recovery with this method. This demonstration is detailed in Section 8.2. On a continuing basis, the laboratory must repeat demonstration of capability (DOC) at least annually.

8.1.2 In recognition of advances that are occurring in analytical technology, and to overcome matrix interferences, the laboratory is permitted certain options (section 1.8 and 40 CFR 136.6(b) [Reference 12]) to improve separations or lower the costs of measurements. These options may include alternative extraction (e.g., other solid-phase extraction materials and formats), concentration, and cleanup procedures, and changes in GC columns (Reference 12). Alternative determinative techniques, such as the substitution of spectroscopic or immunoassay techniques, and changes that degrade method performance, are not allowed. If an analytical technique other than the techniques specified in this method is used, that technique must have a specificity equal to or greater than the specificity of the techniques in this method for the analytes of interest. The laboratory is also encouraged to participate in performance evaluation studies (see section 8.8).

8.1.2.1 Each time a modification listed above is made to this method, the laboratory is required to repeat the procedure in section 8.2. If the detection limit of the method will be affected by the change, the laboratory is required to demonstrate that the MDLs (40 CFR part 136, appendix B) are lower than one-third the regulatory compliance limit or as low as the MDLs in this method, whichever are greater. If calibration will be affected by the change, the instrument must be recalibrated per section 7. Once the modification is demonstrated to produce results equivalent or superior to results produced by this method as written, that modification may be used routinely thereafter, so long as the other requirements in this method are met (e.g., matrix spike/matrix spike duplicate recovery and relative percent difference).

8.1.2.1.1 If an allowed method modification, is to be applied to a specific discharge, the laboratory must prepare and analyze matrix spike/matrix spike duplicate (MS/MSD) samples (section 8.3) and LCS samples (section 8.4). The laboratory must include surrogates (Section 8.7) in each of the samples. The MS/MSD and LCS samples must be fortified with the analytes of interest (section 1.4). If the modification is for nationwide use, MS/MSD samples must be prepared from a minimum of nine different discharges (See section 8.1.2.1.2), and all QC acceptance criteria in this method must be met. This evaluation only needs to be performed once other than for the routine QC required by this method (for example it could be performed by the vendor of an alternative material) but any laboratory using that specific material must have the results of the study available. This includes a full data package with the raw data that will allow an independent reviewer to verify each determination and calculation performed by the laboratory (see section 8.1.2.2.5, items (a)–(q)).

8.1.2.1.2 Sample matrices on which MS/MSD tests must be performed for nationwide use of an allowed modification:

(a) Effluent from a publicly owned treatment works (POTW).

(b) ASTM D5905 Standard Specification for Substitute Wastewater.

(c) Sewage sludge, if sewage sludge will be in the permit.

(d) ASTM D1141 Standard Specification for Substitute Ocean Water, if ocean water will be in the permit.

(e) Untreated and treated wastewaters up to a total of nine matrix types (see *https://www.epa.gov/eg/industrial-effluent-guidelines* for a list of industrial categories with existing effluent guidelines).

(i) At least one of the above wastewater matrix types must have at least one of the following characteristics:

(A) Total suspended solids greater than 40 mg/L.

(B) Total dissolved solids greater than 100 mg/L.

(C) Oil and grease greater than 20 mg/L.

(D) NaCl greater than 120 mg/L.

(E) $CaCO_3$ greater than 140 mg/L.

(ii) The interim acceptance criteria for MS, MSD recoveries that do not have recovery limits in Table 4 or developed in section 8.3.3, and for surrogates that do not have recovery limits developed in section 8.6, must be no wider than 60–140%, and the relative percent difference (RPD) of the concentrations in the MS and MSD that do not have RPD limits in Table 4 or developed in section 8.3.3, must be less than 30%. Alternatively, the laboratory may use the laboratory's in-house limits if they are tighter.

(f) A proficiency testing (PT) sample from a recognized provider, in addition to tests of the nine matrices (section 8.1.2.1.1).

8.1.2.2 The laboratory must maintain records of modifications made to this method. These records include the following, at a minimum:

8.1.2.2.1 The names, titles, and business street addresses, telephone numbers, and email addresses, of the analyst(s) that performed the analyses and modification, and of the quality control officer that witnessed and will verify the analyses and modifications.

8.1.2.2.2 A list of analytes, by name and CAS Registry number.

8.1.2.2.3 A narrative stating reason(s) for the modifications.

8.1.2.2.4 Results from all quality control (QC) tests comparing the modified method to this method, including:

(a) Calibration (section 7).

(b) Calibration verification (section 13.6).

(c) Initial demonstration of capability (section 8.2).

(d) Analysis of blanks (section 8.5).

(e) Matrix spike/matrix spike duplicate analysis (section 8.3).

(f) Laboratory control sample analysis (section 8.4).

8.1.2.2.5 Data that will allow an independent reviewer to validate each determination by tracing the instrument output (peak height, area, or other signal) to the final result. These data are to include:

(a) Sample numbers and other identifiers.

(b) Extraction dates.

(c) Analysis dates and times.

(d) Analysis sequence/run chronology.

(e) Sample weight or volume (section 10).

(f) Extract volume prior to each cleanup step (sections 10 and 11).

(g) Extract volume after each cleanup step (section 11).

(h) Final extract volume prior to injection (sections 10 and 12).

(i) Injection volume (sections 12.3 and 13.2).

(j) Sample or extract dilution (section 15.4).

(k) Instrument and operating conditions.

(l) Column (dimensions, material, etc.).

(m) Operating conditions (temperatures, flow rates, etc.).

(n) Detector (type, operating conditions, etc.).

(o) Chromatograms and other recordings of raw data.

(p) Quantitation reports, data system outputs, and other data to link the raw data to the results reported.

(q) A written Standard Operating Procedure (SOP).

8.1.2.2.6 Each individual laboratory wishing to use a given modification must perform the start-up tests in section 8.1.2 (e.g., DOC, MDL), with the modification as an integral part of this method prior to applying the modification to specific discharges. Results of the DOC must meet the QC acceptance criteria in Table 5 for the analytes of interest (section 1.4), and the MDLs must be equal to or lower than the MDLs in Tables 1 and 2 for the analytes of interest.

8.1.3 Before analyzing samples, the laboratory must analyze a blank to demonstrate that interferences from the analytical system, lab ware, and reagents, are under control. Each time a batch of samples is extracted or reagents are changed, a blank must be extracted and analyzed as a safeguard against laboratory contamination. Requirements for the blank are given in section 8.5.

8.1.4 The laboratory must, on an ongoing basis, spike and analyze samples to monitor and evaluate method and laboratory performance on the sample matrix. The procedure for spiking and analysis is given in section 8.3.

8.1.5 The laboratory must, on an ongoing basis, demonstrate through analysis of a quality control check sample (laboratory control sample, LCS; on-going precision and

recovery sample, OPR) that the measurement system is in control. This procedure is described in Section 8.4.

8.1.6 The laboratory should maintain performance records to document the quality of data that is generated. This procedure is given in section 8.7.

8.1.7 The large number of analytes tested in performance tests in this method present a substantial probability that one or more will fail acceptance criteria when all analytes are tested simultaneously, and a re-test (reanalysis) is allowed if this situation should occur. If, however, continued re-testing results in further repeated failures, the laboratory should document the failures and either avoid reporting results for the analytes that failed or report the problem and failures with the data. A QC failure does not relieve a discharger or permittee of reporting timely results.

8.2 Demonstration of capability (DOC)—To establish the ability to generate acceptable recovery and precision, the laboratory must perform the DOC in sections 8.2.1 through 8.2.6 for the analytes of interest initially and in an on-going manner at least annually. The laboratory must also establish MDLs for the analytes of interest using the MDL procedure at 40 CFR part 136, appendix B. The laboratory's MDLs must be equal to or lower than those listed in Tables 1 or 2, or lower than one-third the regulatory compliance limit, whichever is greater. For MDLs not listed in Tables 1 or 2, the laboratory must determine the MDLs using the MDL procedure at 40 CFR part 136, appendix B under the same conditions used to determine the MDLs for the analytes listed in Tables 1 and 2. When analyzing the PCBs as Aroclors, it is only necessary to establish an MDL for one of the multi-component analytes (e.g., PCB 1254), or the mixture of Aroclors 1016 and 1260 may be used to establish MDLs for all of the Aroclors. Similarly, MDLs for other multi-component analytes (e.g., Chlordanes) may be determined using only one of the major components. All procedures used in the analysis, including cleanup procedures, must be included in the DOC.

8.2.1 For the DOC, a QC check sample concentrate containing each analyte of interest (section 1.4) is prepared in a water-miscible solvent using the solution in section 6.8.3.

NOTE: QC check sample concentrates are no longer available from EPA.

8.2.2 Using a pipet or syringe, prepare four QC check samples by adding an appropriate volume of the concentrate and of the surrogate(s) to each of four 1–L aliquots of reagent water. Swirl or stir to mix.

8.2.3 Extract and analyze the well-mixed QC check samples according to the method beginning in section 10.

8.2.4 Calculate the average percent recovery ($\bar{X}$) and the standard deviation (s) of the percent recovery for each analyte using the four results.

8.2.5 For each analyte, compare s and $\bar{X}$ with the corresponding acceptance criteria for precision and recovery in Table 4. For analytes in Table 2 that are not listed in Table 4, QC acceptance criteria must be developed by the laboratory. EPA has provided guidance for development of QC acceptance criteria (References 12 and 13). If s and $\bar{X}$ for all analytes of interest meet the acceptance criteria, system performance is acceptable and analysis of blanks and samples can begin. If any individual s exceeds the precision limit or any individual $\bar{X}$ falls outside the range for recovery, system performance is unacceptable for that analyte.

NOTE: The large number of analytes in Tables 1 and 2 present a substantial probability that one or more will fail at least one of the acceptance criteria when many or all analytes are determined simultaneously.

8.2.6 When one or more of the analytes tested fail at least one of the acceptance criteria, repeat the test for only the analytes that failed. If results for these analytes pass, system performance is acceptable and analysis of samples and blanks may proceed. If one or more of the analytes again fail, system performance is unacceptable for the analytes that failed the acceptance criteria. Correct the problem and repeat the test (section 8.2). See section 8.1.7 for disposition of repeated failures.

NOTE: To maintain the validity of the test and re-test, system maintenance and/or adjustment is not permitted between this pair of tests.

8.3 Matrix spike and matrix spike duplicate (MS/MSD)—The purpose of the MS/MSD requirement is to provide data that demonstrate the effectiveness of the method as applied to the samples in question by a given laboratory, and both the data user (discharger, permittee, regulated entity, regulatory/control authority, customer, other) and the laboratory share responsibility for provision of such data. The data user should identify the sample and the analytes of interest (section 1.4) to be spiked and provide sufficient sample volume to perform MS/MSD analyses. The laboratory must, on an ongoing basis, spike at least 5% of the samples in duplicate from each discharge being monitored to assess accuracy (recovery and precision). If direction cannot be obtained from the data user, the laboratory must spike at least one sample in duplicate per extraction batch of up to 20 samples with the analytes in Table 1. Spiked sample results should be reported only to the data user whose sample was spiked, or as requested or required by a regulatory/control authority, or in a permit.

8.3.1. If, as in compliance monitoring, the concentration of a specific analyte will be

checked against a regulatory concentration limit, the concentration of the spike should be at that limit; otherwise, the concentration of the spike should be one to five times higher than the background concentration determined in section 8.3.2, at or near the midpoint of the calibration range, or at the concentration in the LCS (section 8.4) whichever concentration would be larger. When no information is available, the mid-point of the calibration may be used.

8.3.2 Analyze one sample aliquot to determine the background concentration (B) of the each analyte of interest. If necessary to meet the requirement in section 8.3.1, prepare a new check sample concentrate (section 8.2.1) appropriate for the background concentration. Spike and analyze two additional sample aliquots of the same volume as the original sample, and determine the concentrations after spiking (A_1 and A_2) of each analyte. Calculate the percent recoveries (P_1 and P_2) as:

$$P_x = \frac{A_x - B}{T} \times 100$$

where T is the known true value of the spike.

Also calculate the relative percent difference (RPD) between the concentrations (A_1 and A_2):

$$RPD = \frac{|A_1 - A_2|}{\frac{A_1 + A_2}{2}} \times 100$$

8.3.3 Compare the percent recoveries (P_1 and P_2) and the RPD for each analyte in the MS/MSD aliquots with the corresponding QC acceptance criteria for recovery (P) and RPD in Table 4.

(a) If any individual P falls outside the designated range for recovery in either aliquot, or the RPD limit is exceeded, the result for the analyte in the unspiked sample is suspect and may not be reported or used for permitting or regulatory compliance. See section 8.1.7 for disposition of failures.

(b) For analytes in Table 2 not listed in Table 4, QC acceptance criteria must be developed by the laboratory. EPA has provided guidance for development of QC acceptance criteria (References 12 and 13).

8.3.4 After analysis of a minimum of 20 MS/MSD samples for each target analyte and surrogate, and if the laboratory chooses to develop and apply optional in-house QC limits, the laboratory should calculate and apply the optional in-house QC limits for recovery and RPD of future MS/MSD samples (Section 8.3). The optional in-house QC limits for recovery are calculated as the mean observed recovery ±3 standard deviations, and the upper QC limit for RPD is calculated as the mean RPD plus 3 standard deviations of the RPDs. The in-house QC limits must be updated at least every two years and re-established after any major change in the analytical instrumentation or process. At least 80% of the analytes tested in the MS/MSD must have in-house QC acceptance criteria that are tighter than those in Table 4 and the remaining analytes (those not included in the 80%) must meet the acceptance criteria in Table 4. If an in-house QC limit for the RPD is greater than the limit in Table 4, then the limit in Table 4 must be used. Similarly, if an in-house lower limit for recovery is below the lower limit in Table 4, then the lower limit in Table 4 must be used, and if an in-house upper limit for recovery is above the upper limit in Table 4, then the upper limit in Table 4 must be used. The laboratory must evaluate surrogate recovery data in each sample against its in-house surrogate recovery limits. The laboratory may use 60 -140% as interim acceptance criteria for surrogate recoveries until in-house limits are developed. Alternatively, surrogate recovery limits may be developed from laboratory control charts. In-house QC acceptance criteria must be updated at least every two years.

8.4 Laboratory control sample (LCS)—A QC check sample (laboratory control sample, LCS; on-going precision and recovery sample, OPR) containing each single-component analyte of interest (section 1.4) must be extracted, concentrated, and analyzed with each extraction batch of up to 20 samples (section 3.1) to demonstrate acceptable recovery of the analytes of interest from a

clean sample matrix. If multi-peak analytes are required, extract and prepare at least one as an LCS for each batch. Alternatively, the laboratory may set up a program where multi-peak LCS is rotated with a single-peak LCS.

8.4.1 Prepare the LCS by adding QC check sample concentrate (sections 6.8.3 and 8.2.1) to reagent water. Include all analytes of interest (section 1.4) in the LCS. The volume of reagent water must be the same as the nominal volume used for the sample, the DOC (Section 8.2), the blank (section 8.5), and the MS/MSD (section 8.3). Also add a volume of the surrogate solution (section 6.8.6).

8.4.2 Analyze the LCS prior to analysis of samples in the extraction batch (Section 3.1). Determine the concentration (A) of each analyte. Calculate the percent recovery as:

$$P_s = \frac{A}{T} \times 100$$

where T is the true value of the concentration in the LCS.

8.4.3 For each analyte, compare the percent recovery (P) with its corresponding QC acceptance criterion in Table 4. For analytes of interest in Table 2 not listed in Table 4, use the QC acceptance criteria developed for the MS/MSD (section 8.3.3.2), or limits based on laboratory control charts. If the recoveries for all analytes of interest fall within the designated ranges, analysis of blanks and field samples may proceed. If any individual recovery falls outside the range, proceed according to section 8.4.4.

NOTE: The large number of analytes in Tables 1 and 2 present a substantial probability that one or more will fail the acceptance criteria when all analytes are tested simultaneously. Because a re-test is allowed in event of failure (sections 8.1.7 and 8.4.4), it may be prudent to extract and analyze two LCSs together and evaluate results of the second analysis against the QC acceptance criteria only if an analyte fails the first test.

8.4.4 Repeat the test only for those analytes that failed to meet the acceptance criteria (P). If these analytes now pass, system performance is acceptable and analysis of blanks and samples may proceed. Repeated failure, however, will confirm a general problem with the measurement system. If this occurs, repeat the test using a fresh LCS (section 8.2.1) or an LCS prepared with a fresh QC check sample concentrate (section 8.2.1), or perform and document system repair. Subsequent to analysis of the LCS prepared with a fresh sample concentrate, or to system repair, repeat the LCS test (Section 8.4). If failure of the LCS indicates a systemic problem with samples in the batch, re-extract and re-analyze the samples in the batch. See Section 8.1.7 for disposition of repeated failures.

8.4.5 After analysis of 20 LCS samples, and if the laboratory chooses to develop and apply optional in-house QC limits, the laboratory should calculate and apply the optional in-house QC limits for recovery of future LCS samples (section 8.4). Limits for recovery in the LCS should be calculated as the mean recovery ±3 standard deviations. A minimum of 80% of the analytes tested for in the LCS must have QC acceptance criteria tighter than those in Table 4, and the remaining analytes (those not included in the 80%) must meet the acceptance criteria in Table 4. If an in-house lower limit for recovery is lower than the lower limit in Table 4, the lower limit in Table 4 must be used, and if an in-house upper limit for recovery is higher than the upper limit in Table 4, the upper limit in Table 4 must be used. Many of the analytes and surrogates do not contain acceptance criteria. The laboratory should use 60–140% as interim acceptance criteria for recoveries of spiked analytes and surrogates that do not have recovery limits specified in Table 4, and at least 80% of the surrogates must meet the 60–140% interim criteria until in-house LCS and surrogate limits are developed. Alternatively, acceptance criteria for analytes that do not have recovery limits in Table 4 may be based on laboratory control charts. In-house QC acceptance criteria must be updated at least every two years.

8.5 Blank—Extract and analyze a blank with each extraction batch (section 3.1) to demonstrate that the reagents and equipment used for preparation and analysis are free from contamination.

8.5.1 Prepare the blank from reagent water and spike it with the surrogates. The volume of reagent water must be the same as the volume used for samples, the DOC (section 8.2), the LCS (section 8.4), and the MS/MSD (section 8.3). Extract, concentrate, and analyze the blank using the same procedures and reagents used for the samples, LCS, and MS/MSD in the batch. Analyze the blank immediately after analysis of the LCS (section 8.4) and prior to analysis of the MS/MSD and samples to demonstrate freedom from contamination.

8.5.2 If any analyte of interest is found in the blank at a concentration greater than the MDL for the analyte, at a concentration

greater than one-third the regulatory compliance limit, or at a concentration greater than one-tenth the concentration in a sample in the batch (section 3.1), whichever is greatest, analysis of samples must be halted and samples in the batch must be re-extracted and the extracts reanalyzed. Samples in a batch must be associated with an uncontaminated blank before the results for those samples may be reported or used for permitting or regulatory compliance purposes. If re-testing of blanks results in repeated failures, the laboratory should document the failures and report the problem and failures with the data.

8.6 Surrogate recovery—The laboratory must spike all samples with the surrogate standard spiking solution (section 6.8.6) per section 10.2.2 or 10.4.2, analyze the samples, and calculate the percent recovery of each surrogate. QC acceptance criteria for surrogates must be developed by the laboratory (section 8.4). If any recovery fails its criterion, attempt to find and correct the cause of the failure, and if sufficient volume is available, re-extract another aliquot of the affected sample; otherwise, see section 8.1.7 for disposition of repeated failures.

8.7 As part of the QC program for the laboratory, it is suggested but not required that method accuracy for wastewater samples be assessed and records maintained. After analysis of five or more spiked wastewater samples as in Section 8.3, calculate the average percent recovery ($\overline{X}$) and the standard deviation of the percent recovery (sp). Express the accuracy assessment as a percent interval from $\overline{X}-2sp$ to $\overline{X}+2sp$. For example, if $\overline{X}$ = 90% and sp = 10%, the accuracy interval is expressed as 70–110%. Update the accuracy assessment for each analyte on a regular basis to ensure process control (e.g., after each 5–10 new accuracy measurements). If desired, statements of accuracy for laboratory performance, independent of performance on samples, may be developed using LCSs.

8.8 It is recommended that the laboratory adopt additional quality assurance practices for use with this method. The specific practices that are most productive depend upon the needs of the laboratory and the nature of the samples. Field duplicates may be analyzed to assess the precision of environmental measurements. When doubt exists over the identification of a peak on the chromatogram, confirmatory techniques such as gas chromatography with another dissimilar column, specific element detector, or mass spectrometer must be used. Whenever possible, the laboratory should analyze standard reference materials and participate in relevant performance evaluation studies.

9. Sample Collection, Preservation, and Handling

9.1 Collect samples as grab samples in glass bottles, or in refrigerated bottles using automatic sampling equipment. Collect 1-L of ambient waters, effluents, and other aqueous samples. If high concentrations of the analytes of interest are expected (e.g., for untreated effluents or in-process waters), collect a smaller volume (e.g., 250 mL), but not less than 100 mL, in addition to the 1-L sample. Follow conventional sampling practices, except do not pre-rinse the bottle with sample before collection. Automatic sampling equipment must be as free as possible of polyvinyl chloride or other tubing or other potential sources of contamination. If needed, collect additional sample(s) for the MS/MSD (section 8.3).

9.2 Ice or refrigerate the sample at ≤6 °C from the time of collection until extraction, but do not freeze. If aldrin is to be determined and residual chlorine is present, add 80 mg/L of sodium thiosulfate but do not add excess. Any method suitable for field use may be employed to test for residual chlorine (Reference 14). If sodium thiosulfate interferes in the determination of the analytes, an alternative preservative (e.g., ascorbic acid or sodium sulfite) may be used.

9.3 Extract all samples within seven days of collection and completely analyze within 40 days of extraction (Reference 1). If the sample will not be extracted within 72 hours of collection, adjust the sample pH to a range of 5.0–9.0 with sodium hydroxide solution or sulfuric acid. Record the volume of acid or base used.

10. Sample Extraction

10.1 This section contains procedures for separatory funnel liquid-liquid extraction (SFLLE, section 10.2), continuous liquid-liquid extraction (CLLE, section 10.4), and disk-based solid-phase extraction (SPE, section 10.5). SFLLE is faster, but may not be as effective as CLLE for extracting polar analytes. SFLLE is labor intensive and may result in formation of emulsions that are difficult to break. CLLE is less labor intensive, avoids emulsion formation, but requires more time (18–24 hours), more hood space, and may require more solvent. SPE can be faster, unless the particulate load in an aqueous sample is so high that it slows the filtration process. If an alternative extraction scheme to those detailed in this method is used, all QC tests must be performed and all QC acceptance criteria must be met with that extraction scheme as an integral part of this method.

10.2 Separatory funnel liquid-liquid extraction (SFLLE).

10.2.1 The SFLLE procedure below assumes a sample volume of 1 L. When a different sample volume is extracted, adjust the volume of methylene chloride accordingly.

10.2.2 Mark the water meniscus on the side of the sample bottle for later determination of sample volume. Pour the entire sample into the separatory funnel. Pipet the surrogate standard spiking solution (section 6.8.6) into the separatory funnel. If the sample will be used for the LCS or MS or MSD, pipet the appropriate QC check sample concentrate (section 8.3 or 8.4) into the separatory funnel. Mix well. If the sample arrives in a larger sample bottle, 1 L may be measured in a graduated cylinder, then added to the separatory funnel.

NOTE: Instances in which the sample is collected in an oversized bottle should be reported by the laboratory to the data user. Of particular concern is that fact that this practice precludes rinsing the empty bottle with solvent as described below, which could leave hydrophobic pesticides on the wall of the bottle, and underestimate the actual sample concentrations.

10.2.3 Add 60 mL of methylene chloride to the sample bottle, seal, and shake for 30 seconds to rinse the inner surface. Transfer the solvent to the separatory funnel and extract the sample by shaking the funnel for two minutes with periodic venting to release excess pressure. Allow the organic layer to separate from the water phase for a minimum of 10 minutes. If an emulsion forms and the emulsion interface between the layers is more than one-third the volume of the solvent layer, employ mechanical techniques to complete the phase separation. The optimum technique depends upon the sample, but may include stirring, filtration of the emulsion through glass wool, use of phase-separation paper, centrifugation, salting, freezing, or other physical methods. Collect the methylene chloride extract in a flask. If the emulsion cannot be broken (recovery of less than 80% of the methylene chloride, corrected for the water solubility of methylene chloride), transfer the sample, solvent, and emulsion into the extraction chamber of a continuous extractor and proceed as described in section 10.4.

10.2.4 Add a second 60-mL volume of methylene chloride to the sample bottle and repeat the extraction procedure a second time, combining the extracts in the flask. Perform a third extraction in the same manner. Proceed to macro-concentration (section 10.3.1).

10.2.5 Determine the original sample volume by refilling the sample bottle to the mark and transferring the liquid to an appropriately sized graduated cylinder. Record the sample volume to the nearest 5 mL. Sample volumes may also be determined by weighing the container before and after extraction or filling to the mark with water.

10.3 Concentration.

10.3.1 Macro concentration.

10.3.1.1 Assemble a Kuderna-Danish (K–D) concentrator by attaching a 10-mL concentrator tube to a 500-mL evaporative flask. Other concentration devices or techniques may be used in place of the K–D concentrator so long as the requirements of section 8.2 are met.

10.3.1.2 Pour the extract through a solvent-rinsed drying column containing about 10 cm of anhydrous sodium sulfate, and collect the extract in the K–D concentrator. Rinse the flask and column with 20–30 mL of methylene chloride to complete the quantitative transfer.

10.3.1.3 If no cleanup is to be performed on the sample, add 500 μL (0.5 mL) of isooctane to the extract to act as a keeper during concentration.

10.3.1.4 Add one or two clean boiling chips and attach a three-ball Snyder column to the K–D evaporative flask. Pre-wet the Snyder column by adding about 1 mL of methylene chloride to the top. Place the K–D apparatus on a hot water bath (60–65 °C) so that the concentrator tube is partially immersed in the hot water, and the entire lower rounded surface of the flask is bathed with hot vapor. Adjust the vertical position of the apparatus and the water temperature as required to complete the concentration in 15–20 minutes. At the proper rate of evaporation the balls of the column will actively chatter but the chambers will not flood with condensed solvent. When the apparent volume of liquid reaches 1 mL or other determined amount, remove the K–D apparatus from the water bath and allow it to drain and cool for at least 10 minutes.

10.3.1.5 If the extract is to be cleaned up by sulfur removal or acid back extraction, remove the Snyder column and rinse the flask and its lower joint into the concentrator tube with 1 to 2 mL of methylene chloride. A 5-mL syringe is recommended for this operation. Adjust the final volume to 10 mL in methylene chloride and proceed to sulfur removal (section 11.5) or acid back extraction (section 11.6). If the extract is to cleaned up using one of the other cleanup procedures or is to be injected into the GC, proceed to Kuderna-Danish micro-concentration (section 10.3.2) or nitrogen evaporation and solvent exchange (section 10.3.3).

10.3.2 Kuderna-Danish micro concentration—Add another one or two clean boiling chips to the concentrator tube and attach a two-ball micro-Snyder column. Pre-wet the Snyder column by adding about 0.5 mL of methylene chloride to the top. Place the K-D apparatus on a hot water bath (60–65 °C) so that the concentrator tube is partially immersed in hot water. Adjust the vertical position of the apparatus and the water temperature as required to complete the concentration in 5–10 minutes. At the proper rate of distillation the balls of the column will actively chatter but the chambers will not flood with condensed solvent. When the

apparent volume of liquid reaches approximately 1 mL or other required amount, remove the K–D apparatus from the water bath and allow it to drain and cool for at least 10 minutes. Remove the Snyder column and rinse the flask and its lower joint into the concentrator tube with approximately 0.2 mL of methylene chloride, and proceed to section 10.3.3 for nitrogen evaporation and solvent exchange.

10.3.3 Nitrogen evaporation and solvent exchange—Extracts to be subjected to solid-phase cleanup (SPE) are exchanged into 1.0 mL of the SPE elution solvent (section 6.7.2.2). Extracts to be subjected to Florisil® or alumina cleanups are exchanged into hexane. Extracts that have been cleaned up and are ready for analysis are exchanged into isooctane or hexane, to match the solvent used for the calibration standards.

10.3.3.1 Transfer the vial containing the sample extract to the nitrogen evaporation (blowdown) device (section 5.2.5.2). Lower the vial into a 50–55 °C water bath and begin concentrating. During the solvent evaporation process, do not allow the extract to become dry. Adjust the flow of nitrogen so that the surface of the solvent is just visibly disturbed. A large vortex in the solvent may cause analyte loss.

10.3.3.2 Solvent exchange.

10.3.3.2.1 When the volume of the liquid is approximately 500 µL, add 2 to 3 mL of the desired solvent (SPE elution solvent for SPE cleanup, hexane for Florisil or alumina, or isooctane for final injection into the GC) and continue concentrating to approximately 500 µL. Repeat the addition of solvent and concentrate once more.

10.3.3.3.2 Adjust the volume of an extract to be cleaned up by SPE, Florisil®, or alumina to 1.0 mL. Proceed to extract cleanup (section 11).

10.3.3.3 Extracts that have been cleaned up and are ready for analysis—Adjust the final extract volume to be consistent with the volume extracted and the sensitivity desired. The goal is for a full-volume sample (e.g., 1-L) to have a final extract volume of 10 mL, but other volumes may be used.

10.3.4 Transfer the concentrated extract to a vial with fluoropolymer-lined cap. Seal the vial and label with the sample number. Store in the dark at room temperature until ready for GC analysis. If GC analysis will not be performed on the same day, store the vial in the dark at ≤6 °C. Analyze the extract by GC per the procedure in section 12.

10.4 Continuous liquid/liquid extraction (CLLE).

10.4.1 Use CLLE when experience with a sample from a given source indicates an emulsion problem, or when an emulsion is encountered using SFLLE. CLLE may be used for all samples, if desired.

10.4.2 Mark the water meniscus on the side of the sample bottle for later determination of sample volume. Transfer the sample to the continuous extractor and, using a pipet, add surrogate standard spiking solution. If the sample will be used for the LCS, MS, or MSD, pipet the appropriate check sample concentrate (section 8.2.1 or 8.3.2) into the separatory funnel. Mix well. Add 60 mL of methylene chloride to the sample bottle, seal, and shake for 30 seconds to rinse the inner surface. Transfer the solvent to the extractor.

10.4.3 Repeat the sample bottle rinse with two additional 50–100 mL portions of methylene chloride and add the rinses to the extractor.

10.4.4 Add a suitable volume of methylene chloride to the distilling flask (generally 200–500 mL) and sufficient reagent water to ensure proper operation of the extractor, and extract the sample for 18–24 hours. A shorter or longer extraction time may be used if all QC acceptance criteria are met. Test and, if necessary, adjust the pH of the water to a range of 5.0–9.0 during the second or third hour of the extraction. After extraction, allow the apparatus to cool, then detach the distilling flask. Dry, concentrate, solvent exchange, and transfer the extract to a vial with fluoropolymer-lined cap, per Section 10.3.

10.4.5 Determine the original sample volume by refilling the sample bottle to the mark and transferring the liquid to an appropriately sized graduated cylinder. Record the sample volume to the nearest 5 mL. Sample volumes may also be determined by weighing the container before and after extraction or filling to the mark with water.

10.5 Solid-phase extraction of aqueous samples. The steps in this section address the extraction of aqueous field samples using disk-based solid-phase extraction (SPE) media, based on an ATP approved by EPA in 1995 (Reference 20). This application of SPE is distinct from that used in this method for the cleanup of sample extracts in section 11.2. Analysts must be careful not to confuse the equipment, supplies, or the procedural steps from these two different uses of SPE.

NOTE: Changes to the extraction conditions described below may be made by the laboratory under the allowance for method flexibility described in section 8.1, provided that the performance requirements in section 8.2 are met. However, changes in SPE materials, formats, and solvents must meet the requirements in section 8.1.2 and its subsections.

10.5.1 Mark the water meniscus on the side of the sample bottle for later determination of sample volume. If the sample contains particulates, let stand to settle out the particulates before extraction.

10.5.2 Extract the sample as follows:

10.5.2.1 Place a 90-mm standard filter apparatus on a vacuum filtration flask or manifold and attach to a vacuum source. The vacuum gauge must read at least 25 in. of

mercury when all valves are closed. Position a 90-mm C18 extraction disk onto the filter screen. Wet the entire disk with methanol. To aid in filtering samples with particulates, a 1-µm glass fiber filter or Empore® Filter Aid 400 can be placed on the top of the disk and wetted with methanol. Install the reservoir and clamp. Resume vacuum to dry the disk. Interrupt the vacuum. Wash the disk and reservoir with 20 mL of methylene chloride. Resume the vacuum briefly to pull methylene chloride through the disk. Interrupt the vacuum and allow the disk to soak for about a minute. Resume vacuum and completely dry the disk.

10.5.2.2 Condition the disk with 20 mL of methanol. Apply vacuum until nearly all the solvent has passed through the disk, interrupting it while solvent remains on the disk. Allow the disk to soak for about a minute. Resume vacuum to pull most of the methanol through, but interrupting it to leave a layer of methanol on the surface of the disk. Do not allow disk to dry. For uniform flow and good recovery, it is critical the disk not be allowed to dry from now until the end of the extraction. Discard waste solvent. Rinse the disk with 20 mL of deionized water. Resume vacuum to pull most of the water through, but interrupt it to leave a layer of water on the surface of the disk. Do not allow the disk to dry. If disk does dry, recondition with methanol as above.

10.5.2.3 Add the water sample to the reservoir and immediately apply the vacuum. If particulates have settled in the sample, gently decant the clear layer into the apparatus until most of the sample has been processed. Then pour the remainder including the particulates into the reservoir. Empty the sample bottle completely. When the filtration is complete, dry the disk for three minutes. Turn off the vacuum.

10.5.3 Discard sample filtrate. Insert tube to collect the eluant. The tube should fit around the drip tip of the base. Reassemble the apparatus. Add 5.0 mL of acetone to the center of the disk, allowing it to spread evenly over the disk. Turn the vacuum on and quickly off when the filter surface nears dryness but still remains wet. Allow to soak for 15 seconds. Add 20 mL of methylene chloride to the sample bottle, seal and shake to rinse the inside of the bottle. Transfer the methylene chloride from the bottle to the filter. Resume the vacuum slowly so as to avoid splashing.

Interrupt the vacuum when the filter surface nears dryness but still remains wet. Allow disk to soak in solvent for 20 seconds. Rinse the reservoir glass and disk with 10 mL of methylene chloride. Resume vacuum slowly. Interrupt vacuum when disk is covered with solvent. Allow to soak for 20 seconds. Resume vacuum to dry the disk. Remove the sample tube.

10.5.4 Dry, concentrate, solvent exchange, and transfer the extract to a vial with fluoropolymer-lined cap, per section 10.3.

10.5.5 Determine the original sample volume by refilling the sample bottle to the mark and transferring the liquid to an appropriately sized graduated cylinder. Record the sample volume to the nearest 5 mL. Sample volumes may also be determined by weighing the container before and after extraction or filling to the mark with water.

11. Extract Cleanup

11.1 Cleanup may not be necessary for relatively clean samples (e.g., treated effluents, groundwater, drinking water). If particular circumstances require the use of a cleanup procedure, the laboratory may use any or all of the procedures below or any other appropriate procedure (e.g., gel permeation chromatography). However, the laboratory must first repeat the tests in sections 8.2, 8.3, and 8.4 to demonstrate that the requirements of those sections can be met using the cleanup procedure(s) as an integral part of this method. This is particularly important when the target analytes for the analysis include any of the single component pesticides in Table 2, because some cleanups have not been optimized for all of those analytes.

11.1.1 The solid-phase cartridge (section 11.2) removes polar organic compounds such as phenols.

11.1.2 The Florisil® column (section 11.3) allows for selected fractionation of the organochlorine analytes and will also eliminate polar interferences.

11.1.3 Alumina column cleanup (section 11.4) also removes polar materials.

11.1.4 Elemental sulfur, which interferes with the electron capture gas chromatography of some of the pesticides, may be removed using activated copper, or TBA sulfite. Sulfur removal (section 11.5) is required when sulfur is known or suspected to be present. Some chlorinated pesticides which also contain sulfur may be removed by this cleanup.

11.1.5 Acid back extraction (section 11.6) may be useful for cleanup of PCBs and other compounds not adversely affected by sulfuric acid.

11.2 Solid-phase extraction (SPE) as a cleanup. In order to use the C18 SPE cartridge in section 5.5.3.5 as a cleanup procedure, the sample extract must be exchanged from methylene chloride to methylene chloride:acetonitrile:hexane (50:3:47). Follow the solvent exchange steps in section 10.3.3.2 prior to attempting solid-phase cleanup.

NOTE: This application of SPE is distinct from that used in this method for the extraction of aqueous samples in section 10.5. Analysts must be careful not to confuse the equipment, supplies, or procedural steps from these two different uses of SPE.

11.2.1 Setup.

11.2.1.1 Attach the VacElute Manifold (section 5.5.3.2) to a water aspirator or vacuum pump with the trap and gauge installed between the manifold and vacuum source.

11.2.1.2 Place the SPE cartridges in the manifold, turn on the vacuum source, and adjust the vacuum to 5 to 10 psi.

11.2.2 Cartridge washing—Pre-elute each cartridge prior to use sequentially with 10-mL portions each of hexane, methanol, and water using vacuum for 30 seconds after each eluting solvent. Follow this pre-elution with 1 mL methylene chloride and three 10-mL portions of the elution solvent (section 6.7.2.2) using vacuum for 5 minutes after each eluting solvent. Tap the cartridge lightly while under vacuum to dry between solvent rinses. The three portions of elution solvent may be collected and used as a cartridge blank, if desired. Finally, elute the cartridge with 10 mL each of methanol and water, using the vacuum for 30 seconds after each eluant.

11.2.3 Extract cleanup.

11.2.3.1 After cartridge washing (section 11.2.2), release the vacuum and place the rack containing the 50-mL volumetric flasks (section 5.5.3.4) in the vacuum manifold. Reestablish the vacuum at 5 to 10 psi.

11.2.3.2 Using a pipette or a 1-mL syringe, transfer 1.0 mL of extract to the SPE cartridge. Apply vacuum for five minutes to dry the cartridge. Tap gently to aid in drying.

11.2.3.3 Elute each cartridge into its volumetric flask sequentially with three 10-mL portions of the methylene chloride:acetonitrile:hexane (50:3:47) elution solvent (section 6.7.2.2), using vacuum for five minutes after each portion. Collect the eluants in the 50-mL volumetric flasks.

11.2.3.4 Release the vacuum and remove the 50-mL volumetric flasks.

11.2.3.5 Concentrate the eluted extracts per Section 10.3.

11.3 Florisil®. In order to use Florisil cleanup, the sample extract must be exchanged from methylene chloride to hexane. Follow the solvent exchange steps in section 10.3.3.2 prior to attempting Florisil® cleanup.

NOTE: Alternative formats for this cleanup may be used by the laboratory, including cartridges containing Florisil®. If an alternative format is used, consult the manufacturer's instructions and develop a formal documented procedure to replace the steps in section 11.3 of this method and demonstrate that the alternative meets the relevant quality control requirements of this method.

11.3.1 If the chromatographic column does not contain a frit at the bottom, place a small plug of pre-cleaned glass wool in the column (section 5.2.4) to retain the Florisil®. Place the mass of Florisil® (nominally 20 g) predetermined by calibration (section 7.8 and Table 6) in a chromatographic column. Tap the column to settle the Florisil® and add 1 to 2 cm of granular anhydrous sodium sulfate to the top.

11.3.2 Add 60 mL of hexane to wet and rinse the sodium sulfate and Florisil®. Just prior to exposure of the sodium sulfate layer to the air, stop the elution of the hexane by closing the stopcock on the chromatographic column. Discard the eluant.

11.3.3 Transfer the concentrated extract (section 10.3.3) onto the column. Complete the transfer with two 1-mL hexane rinses, drawing the extract and rinses down to the level of the sodium sulfate.

11.3.4 Place a clean 500-mL K–D flask and concentrator tube under the column. Elute Fraction 1 with 200 mL of 6% (v/v) ethyl ether in hexane at a rate of approximately 5 mL/min. Remove the K–D flask and set it aside for later concentration. Elute Fraction 2 with 200 mL of 15% (v/v) ethyl ether in hexane into a second K–D flask. Elute Fraction 3 with 200 mL of 50% (v/v) ethyl ether in hexane into a third K–D flask. The elution patterns for the pesticides and PCBs are shown in Table 6.

11.3.5 Concentrate the fractions as in Section 10.3, except use hexane to prewet the column and set the water bath at about 85 °C. When the apparatus is cool, remove the Snyder column and rinse the flask and its lower joint into the concentrator tube with hexane. Adjust the volume of Fraction 1 to approximately 10 mL for sulfur removal (Section 11.5), if required; otherwise, adjust the volume of the fractions to 10 mL, 1.0 mL, or other volume needed for the sensitivity desired. Analyze the concentrated extract by gas chromatography (Section 12).

11.4 Alumina. The sample extract must be exchanged from methylene chloride to hexane. Follow the solvent exchange steps in section 10.3.3.2 prior to attempting alumina cleanup.

11.4.1 If the chromatographic column does not contain a frit at the bottom, place a small plug of pre-cleaned glass wool in the chromatographic column (section 5.2.4) to retain the alumina. Add 10 g of alumina (section 6.7.3) on top of the plug. Tap the column to settle the alumina. Place 1–2 g of anhydrous sodium sulfate on top of the alumina.

11.4.2 Close the stopcock and fill the column to just above the sodium sulfate with hexane. Add 25 mL of hexane. Open the stopcock and adjust the flow rate of hexane to approximately 2 mL/min. Do not allow the column to go dry throughout the elutions.

11.4.3 When the level of the hexane is at the top of the column, quantitatively transfer the extract to the column. When the level of the extract is at the top of the column, slowly add 25 mL of hexane and elute the column to the level of the sodium sulfate. Discard the hexane.

11.4.4 Place a K–D flask (section 5.2.5.1.2) under the column and elute the pesticides

with approximately 150 mL of hexane:ethyl ether (80:20 v/v). It may be necessary to adjust the volume of elution solvent for slightly different alumina activities.

11.4.5 Concentrate the extract per section 10.3.

11.5 Sulfur removal—Elemental sulfur will usually elute in Fraction 1 of the Florisil® column cleanup. If Florisil® cleanup is not used, or to remove sulfur from any of the Florisil® fractions, use one of the sulfur removal procedures below. These procedures may be applied to extracts in hexane, ethyl ether, or methylene chloride.

NOTE: Separate procedures using copper or TBA sulfite are provided in this section for sulfur removal. They may be used separately or in combination, if desired.

11.5.1 Removal with copper (Reference 15).

NOTE: Some of the analytes in Table 2 are not amenable to sulfur removal with copper (e.g., atrazine and diazinon). Therefore, before using copper to remove sulfur from an extract that will be analyzed for any of the non-PCB analytes in Table 2, the laboratory must demonstrate that the analytes can be extracted from an aqueous sample matrix that contains sulfur and recovered from an extract treated with copper. Acceptable performance can be demonstrated through the preparation and analysis of a matrix spike sample that meets the QC requirements for recovery.

11.5.1.1 Quantitatively transfer the extract to a 40- to 50-mL flask or bottle. If there is evidence of water in the K–D or round-bottom flask after the transfer, rinse the flask with small portions of hexane:acetone (40:60) and add to the flask or bottle. Mark and set aside the concentration flask for future use.

11.5.1.2 Add 10–20 g of granular anhydrous sodium sulfate to the flask. Swirl to dry the extract.

11.5.1.3 Add activated copper (section 6.7.4.1.4) and allow to stand for 30–60 minutes, swirling occasionally. If the copper does not remain bright, add more and swirl occasionally for another 30–60 minutes.

11.5.1.4 After drying and sulfur removal, quantitatively transfer the extract to a nitrogen-evaporation vial or tube and proceed to section 10.3.3 for nitrogen evaporation and solvent exchange, taking care to leave the sodium sulfate and copper foil in the flask.

11.5.2 Removal with TBA sulfite.

11.5.2.1 Using small volumes of hexane, quantitatively transfer the extract to a 40- to 50-mL centrifuge tube with fluoropolymer-lined screw cap.

11.5.2.2 Add 1–2 mL of TBA sulfite reagent (section 6.7.4.2.4), 2–3 mL of 2-propanol, and approximately 0.7 g of sodium sulfite (section 6.7.4.2.2) crystals to the tube. Cap and shake for 1–2 minutes. If the sample is colorless or if the initial color is unchanged, and if clear crystals (precipitated sodium sulfite) are observed, sufficient sodium sulfite is present. If the precipitated sodium sulfite disappears, add more crystalline sodium sulfite in approximately 0.5-g portions until a solid residue remains after repeated shaking.

11.5.2.3 Add 5–10 mL of reagent water and shake for 1–2 minutes. Centrifuge to settle the solids.

11.5.2.4 Quantitatively transfer the hexane (top) layer through a small funnel containing a few grams of granular anhydrous sodium sulfate to a nitrogen-evaporation vial or tube and proceed to section 10.3.3 for micro-concentration and solvent exchange.

11.6 Acid back extraction (section 6.1.2).

11.6.1 Quantitatively transfer the extract (section 10.3.1.5) to a 250-mL separatory funnel.

11.6.2 Partition the extract against 50 mL of sulfuric acid solution (section 6.1.2). Discard the aqueous layer. Repeat the acid washing until no color is visible in the aqueous layer, to a maximum of four washings.

11.6.3 Partition the extract against 50 mL of sodium chloride solution (section 6.7.5). Discard the aqueous layer.

11.6.4 Proceed to section 10.3.3 for microconcentration and solvent exchange.

12. Gas Chromatography

12.1 Establish the same operating conditions used in section 7.1 for instrument calibration.

12.2 If the internal standard calibration procedure is used, add the internal standard solution (section 6.9.3) to the extract as close as possible to the time of injection to minimize the possibility of loss by evaporation, adsorption, or reaction. For example, add 1 µL of 10 µg/mL internal standard solution into the extract, assuming no dilutions. Mix thoroughly.

12.3 Simultaneously inject an appropriate volume of the sample extract or standard solution onto both columns, using split, splitless, solvent purge, large-volume, or on-column injection. Alternatively, if using a single-column GC configuration, inject an appropriate volume of the sample extract or standard solution onto each GC column independently. If the sample is injected manually, the solvent-flush technique should be used. The injection volume depends upon the technique used and the sensitivity needed to meet MDLs or reporting limits for regulatory compliance. Injection volumes must be the same for all extracts. Record the volume injected to the nearest 0.05 µL.

12.4 Set the data system or GC control to start the temperature program upon sample injection, and begin data collection after the solvent peak elutes. Set the data system to stop data collection after the last analyte is expected to elute and to return the column to the initial temperature.

12.5 Perform all qualitative and quantitative measurements as described in Sections 14 and 15. When standards and extracts are not being used for analyses, store them refrigerated at <6 °C, protected from light, in screw-cap vials equipped with un-pierced fluoropolymer-lined septa.

13. System and Laboratory Performance

13.1 At the beginning of each shift during which standards or extracts are analyzed, GC system performance and calibration must be verified for all analytes and surrogates on both column/detector systems. Adjustment and/or recalibration (per section 7) are performed until all performance criteria are met. Only after all performance criteria are met may samples, blanks and other QC samples, and standards be analyzed.

13.2 Inject an aliquot of the calibration verification standard (section 6.8.4) on both columns. Inject an aliquot of each of the multi-component standards.

13.3 Retention times—The absolute retention times of the peak maxima shall be within ±2 seconds of the retention times in the calibration verification (section 7.8).

13.4 GC resolution—Resolution is acceptable if the valley height between two peaks (as measured from the baseline) is less than 40% of the shorter of the two peaks.

13.4.1 DB–608 column—DDT and endrin aldehyde

13.4.2 DB–1701 column—*alpha* and *gamma* chlordane

NOTE: If using other GC columns or stationary phases, these resolution criteria apply to these four target analytes and any other closely eluting analytes on those other GC columns.

13.5 Decomposition of DDT and endrin—If DDT, endrin, or their breakdown products are to be determined, this test must be performed prior to calibration verification (section 13.6). DDT decomposes to DDE and DDD. Endrin decomposes to endrin aldehyde and endrin ketone.

13.5.1 Inject 1 µL of the DDT and endrin decomposition solution (section 6.8.7). As noted in section 6.8.7, other injection volumes may be used as long as the concentrations of DDT and endrin in the solution are adjusted to introduce the masses of the two analytes into the instrument that are listed in section 6.8.7.

13.5.2 Measure the areas of the peaks for DDT, DDE, DDD, endrin, endrin aldehyde, and endrin ketone in the chromatogram and calculate the percent breakdown as shown in the equations below:

$$\%\ \text{breakdown of DDT} = \frac{\text{sum of degradation peak areas (DDD + DDE)}}{\text{sum of all peak areas (DDT + DDE + DDD)}} \times 100$$

$$\%\ \text{breakdown of Endrin} = \frac{\text{sum of degradation peak areas (Endrin aldehyde + Endrin ketone)}}{\text{sum of all peak areas (Endrin + Endrin aldehyde + Endrin ketone)}} \times 100$$

13.5.3 Both the % breakdown of DDT and of endrin must be less than 20%, otherwise the system is not performing acceptably for DDT and endrin. In this case, repair the GC column system that failed and repeat the performance tests (sections 13.2 to 13.6) until the specification is met.

NOTE: DDT and endrin decomposition are usually caused by accumulations of particulates in the injector and in the front end of the column. Cleaning and silanizing the injection port liner, and breaking off a short section of the front end of the column will usually eliminate the decomposition problem. Either of these corrective actions may affect retention times, GC resolution, and calibration linearity.

13.6 Calibration verification.

13.6.1 Compute the percent recovery of each analyte and of the coeluting analytes, based on the initial calibration data (section 7.5 or 7.6).

13.6.2 For each analyte or for coeluting analytes, compare the concentration with the limits for calibration verification in Table 4. For coeluting analytes, use the coeluting analyte with the least restrictive specification (the widest range). For analytes in Table 2 not listed in Table 4, QC acceptance criteria must be developed by the laboratory. EPA has provided guidance for development of QC acceptance criteria (References 13 and 14). If the recoveries for all analytes meet the acceptance criteria, system performance is acceptable and analysis of blanks and samples may continue. If, however, any recovery falls outside the calibration verification range, system performance is unacceptable for that analyte. If this occurs, repair the system and repeat the test (section 13.6), or prepare a fresh calibration

standard and repeat the test, or recalibrate (section 7). See Section 8.1.7 for information on repeated test failures.

13.7 Laboratory control sample.

13.7.1 Analyze the extract of the LCS (section 6.8.3) extracted with each sample batch (Section 8.4). See Section 8.4 for criteria acceptance of the LCS.

13.7.2 It is suggested, but not required, that the laboratory update statements of data quality. Add results that pass the specifications in section 13.7.3 to initial (section 8.7) and previous ongoing data. Update QC charts to form a graphic representation of continued laboratory performance. Develop a statement of laboratory data quality for each analyte by calculating the average percent recovery (R) and the standard deviation of percent recovery, sr. Express the accuracy as a recovery interval from R − 2sr to R + 2sr. For example, if R = 95% and sr = 5%, the accuracy is 85 to 105%.

13.8 Internal standard response—If internal standard calibration is used, verify that detector sensitivity has not changed by comparing the response (area or height) of each internal standard in the sample, blank, LCS, MS, and MSD to the response in calibration verification (section 6.8.3). The peak area or height of the internal standard should be within 50% to 200% (½ to 2x) of its respective peak area or height in the verification standard. If the area or height is not within this range, compute the concentration of the analytes using the external standard method (section 7.5). If the analytes are affected, reprepare and reanalyze the sample, blank, LCS, MS, or MSD, and repeat the pertinent test.

14. Qualitative Identification

14.1 Identification is accomplished by comparison of data from analysis of a sample, blank, or other QC sample with data from calibration verification (section 7.7.1 or 13.5), and with data stored in the retention-time and calibration libraries (section 7.7). The retention time window is determined as described in section 14.2. Identification is confirmed when retention time agrees on both GC columns, as described below. Alternatively, GC/MS identification may be used to provide another means of identification.

14.2 Establishing retention time windows.

14.2.1 Using the data from the multi-point initial calibration (section 7.4), determine the retention time in decimal minutes (not minutes:seconds) of each peak representing a single-component target analyte on each column/detector system. For the multi-component analytes, use the retention times of the five largest peaks in the chromatograms on each column/detector system.

14.2.2 Calculate the standard deviation of the retention times for each single-component analyte on each column/detector system and for the three to five exclusive (unique large) peaks for each multi-component analyte.

14.2.3 Define the width of the retention time window as three times that standard deviation. Establish the center of the retention time window for each analyte by using the absolute retention time for each analyte from the calibration verification standard at the beginning of the analytical shift. For samples run during the same shift as an initial calibration, use the retention time of the mid-point standard of the initial calibration. If the calculated RT window is less than 0.02 minutes, then use 0.02 minutes as the window.

NOTE: Procedures for establishing retention time windows from other sources may be employed provided that they are clearly documented and provide acceptable performance. Such performance may be evaluated using the results for the spiked QC samples described in this method, such as laboratory control samples and matrix spike samples.

14.2.4 The retention time windows must be recentered when a new GC column is installed or if a GC column has been shortened during maintenance to a degree that the retention times of analytes in the calibration verification standard have shifted close to the lower limits of the established retention time windows.

14.2.5 RT windows should be checked periodically by examining the peaks in spiked samples such as the LCS or MS/MSD to confirm that peaks for known analytes are properly identified.

14.2.6 If the retention time of an analyte in the calibration (Section 7.4) varies by more than 5 seconds across the calibration range as a function of the concentration of the standard, using the standard deviation of the retention times (section 14.2.3) to set the width of the retention time window may not adequately serve to identify the analyte in question under routine conditions. In such cases, data from additional analyses of standards may be required to adequately model the chromatographic behavior of the analyte.

14.3 Identifying the analyte in a sample.

14.3.1 In order to identify a single-component analyte from analysis of a sample, blank, or other QC sample, the peak representing the analyte must fall within its respective retention time windows on both column/detector systems (as defined in section 14.2). That identification is further supported by the comparison of the numerical results on both columns, as described in section 15.7.

14.3.2 In order to identify a multi-component analyte, pattern matching (fingerprinting) may be used, or the three to five exclusive (unique and largest) peaks for that analyte must fall within their respective retention time windows on both column/detector systems (as defined in section 14.2).

That identification is further supported by the comparison of the numerical results on both columns, as described in section 15.7. Alternatively, GC/MS identification may be used. Differentiation among some of the Aroclors may require evaluation of more than five peaks to ensure correct identification.

14.4 GC/MS confirmation. When the concentration of an analyte is sufficient and the presence or identity is suspect, its presence should be confirmed by GC/MS. In order to match the sensitivity of the GC/ECD, confirmation would need to be by GC/MS–SIM, or the estimated concentration would need to be 100 times higher than the GC/ECD calibration range. The extract may be concentrated by an additional amount to allow a further attempt at GC/MS confirmation.

14.5 Additional information that may aid the laboratory in the identification of an analyte. The occurrence of peaks eluting near the retention time of an analyte of interest increases the probability of a false positive for the analyte. If the concentration is insufficient for confirmation by GC/MS, the laboratory may use the cleanup procedures in this method (section 11) on a new sample aliquot to attempt to remove the interferent. After attempts at cleanup are exhausted, the following steps may be helpful to assure that the substance that appears in the RT windows on both columns is the analyte of interest.

14.5.1 Determine the consistency of the RT data for the analyte on each column. For example, if the RT is very stable (*i.e.*, varies by no more than a few seconds) for the calibration, calibration verification, blank, LCS, and MS/MSD, the RT for the analyte of interest in the sample should be within this variation regardless of the window established in Section 14.2. If the analyte is not within this variation on both columns, it is likely not present.

14.5.2 The possibility exists that the RT for the analyte in a sample could shift if extraneous materials are present. This possibility may be able to be confirmed or refuted by the behavior of the surrogates in the sample. If multiple surrogates are used that span the length of the chromatographic run, the RTs for the surrogates on both columns are consistent with their RTs in calibration, calibration verification, blank, LCS, and MS/MSD, it is unlikely that the RT for the analyte of interest has shifted.

14.5.3 If the RT for the analyte is shifted slightly later on one column and earlier on the other, and the surrogates have not shifted, it is highly unlikely that the analyte is present, because shifts nearly always occur in the same direction on both columns.

15. Quantitative Determination

15.1 External standard quantitation—Calculate the concentration of the analyte in the extract using the calibration curve or average calibration factor determined in calibration (section 7.5.2) and the following equation:

$$C_{ex} = \frac{A_s}{CF}$$

where:

C_{ex} = Concentration of the analyte in the extract (ng/mL)

A_s = Peak height or area for the analyte in the standard or sample

CF = Calibration factor, as defined in Section 7.5.1

15.2 Internal standard quantitation—Calculate the concentration of the analyte in the extract using the calibration curve or average response factor determined in calibration (section 7.6.2) and the following equation:

$$C_{ex} = \frac{A_s \text{ x } C_{is}}{A_{is} \text{ x } RF}$$

where:

C_{ex} = Concentration of the analyte in the extract (ng/mL)

A_s = Peak height or area for the analyte in the standard or sample

C_{is} = Concentration of the internal standard (ng/mL)

A_{is} = Area of the internal standard

RF = Response factor, as defined in section 7.6.1

15.3 Calculate the concentration of the analyte in the sample using the concentration in the extract, the extract volume, the sample volume, and the dilution factor, per the following equation:

$$C_s = \frac{C_{ex} \times V_{ex} \times DF}{V_s \times 1000}$$

where:

C_s = Concentration of the analyte in the sample (µg/L)
V_{ex} = Final extract volume (mL)
C_{ex} = Concentration in the extract (ng/mL)
V_s = Volume of sample (L)
DF = Dilution factor

and the factor of 1,000 in the denominator converts the final units from ng/L to µg/L

15.4 If the concentration of any target analyte exceeds the calibration range, either extract and analyze a smaller sample volume, or dilute and analyze the diluted extract.

15.5 Quantitation of multi-component analytes.

15.5.1 PCBs as Aroclors. Quantify an Aroclor by comparing the sample chromatogram to that of the most similar Aroclor standard as indicated in section 14.3.2. Compare the responses of 3 to 5 major peaks in the calibration standard for that Aroclor with the peaks observed in the sample extract. The amount of Aroclor is calculated using the individual calibration factor for each of the 3 to 5 characteristic peaks chosen in section 7.5.1. Determine the concentration of each of the characteristic peaks, using the average calibration factor calculated for that peak in section 7.5.2, and then those 3 to 5 concentrations are averaged to determine the concentration of that Aroclor.

15.5.2 Other multi-component analytes. Quantify any other multi-component analytes (technical chlordane or toxaphene) using the same peaks used to develop the average calibration factors in section 7.5.2. Determine the concentration of each of the characteristic peaks, and then the concentrations represented by those characteristic peaks are averaged to determine the concentration of the analyte. Alternatively, for toxaphene, the analyst may determine the calibration factor in section 7.5.2 by summing the areas of all of the peaks for the analyte and using the summed of the peak areas in the sample chromatogram to determine the concentration. However, the approach used for toxaphene must be the same for the calibration and the sample analyses.

15.6 Reporting of results. As noted in section 1.6.1, EPA has promulgated this method at 40 CFR part 136 for use in wastewater compliance monitoring under the National Pollutant Discharge Elimination System (NPDES). The data reporting practices described here are focused on such monitoring needs and may not be relevant to other uses of the method.

15.6.1 Report results for wastewater samples in µg/L without correction for recovery. (Other units may be used if required by in a permit.) Report all QC data with the sample results.

15.6.2 Reporting level. Unless specified otherwise by a regulatory authority or in a discharge permit, results for analytes that meet the identification criteria are reported down to the concentration of the ML established by the laboratory through calibration of the instrument (see section 7.5 or 7.6 and the glossary for the derivation of the ML). EPA considers the terms ''reporting limit,'' ''quantitation limit,'' and ''minimum level'' to be synonymous.

15.6.2.1 Report the lower result from the two columns (see section 15.7 below) for each analyte in each sample or QC standard at or above the ML to 3 significant figures. Report a result for each analyte in each sample or QC standard below the ML as ''<ML,'' where ''ML'' is the concentration of the analyte at the ML (e.g., if the ML is 10 µg/L, then report the result as <10 µg/L), or as required by the regulatory authority or permit. Report a result for each analyte in a blank at or above the MDL to 2 significant figures. Report a result for each analyte found in a blank below the MDL as ''<MDL,'' where MDL is the concentration of the analyte at the MDL, or as required by the regulatory/control authority or permit.

15.6.2.2 In addition to reporting results for samples and blank(s) separately, the concentration of each analyte in a blank or field blank associated with that sample may be subtracted from the result for that sample, but only if requested or required by a regulatory authority or in a permit. In this case, both the sample result and the blank results must be reported together.

15.6.2.3 Report the result for an analyte in a sample or extract that has been diluted at the least dilute level at which the peak area is within the calibration range (*i.e.*, above the ML for the analyte) and the MS/MSD recovery and RPD are within their respective QC acceptance criteria (Table 4). This may require reporting results for some analytes

from different analyses. Results for each analyte in MS/MSD samples should be reported from the same GC column as used to report the results for that analyte in the unspiked sample. If the MS/MSD recoveries and RPDs calculated in this manner do not meet the acceptance criteria in Table 4, the analyst may use the results from the other GC column to determine if the MS/MSD results meet the acceptance criteria. If such a situation occurs, the results for the sample should be recalculated using the same GC column data as used for the MS/MSD samples, and reported with appropriate annotations that alert the data user of the issue.

15.6.2.4 Results from tests performed with an analytical system that is not in control (*i.e.*, that does not meet acceptance criteria for all of QC tests in this method) must not be reported or otherwise used for permitting or regulatory compliance purposes, but do not relieve a discharger or permittee of reporting timely results. See section 8.1.7 for dispositions of failures. If the holding time would be exceeded for a re-analysis of the sample, the regulatory/control authority should be consulted for disposition.

15.6.3 Analyze the sample by GC/MS or on a third column when analytes have co-eluted or interfere with determination on both columns.

NOTE: Dichlone and kepone do not elute from the DB–1701 column and must be confirmed on a DB–5 column, or by GC/MS.

15.7 Quantitative information that may aid in the confirmation of the presence of an analyte.

15.7.1 As noted in Section 14.3, the relative agreement between the numerical results from the two GC columns may be used to support the identification of the target analyte by providing evidence that co-eluting interferences are not present at the retention time of the target analyte. Calculate the percent difference (%D) between the results for the analyte from both columns, as follows:

$$\%D = \frac{\text{Higher result} - \text{Lower result}}{\text{Higher result}} \text{ x } 100$$

In general, if the %D of the two results is less than 50% (e.g., a factor of 2), then the pesticide is present. This %D is generous and allows for the pesticide that has the largest measurement error.

NOTE: Laboratories may employ metrics less than 50% for this comparison, including those specified in other analytical methods for these pesticides (e.g., CLP or SW–846).

15.7.2 If the amounts do not agree, and the RT data indicate the presence of the analyte (per Section 14), it is likely that a positive interference is present on the column that yielded the higher result. That interferent may be represented by a separate peak on the other column that does not coincide with the retention time of any of the target analytes. If the interfering peak is evident on the other column, report the result from that column and advise the data user that the interference resulted in a %D value greater than 50%. If an interferent is not identifiable on the second column, then the results must be reported as ''not detected'' at the lower concentration. In this event, the pesticide is not confirmed and the reporting limit is elevated. See section 8.1.7 for disposition of problem results.

NOTE: The resulting elevation of the reporting limit may not meet the requirements for compliance monitoring and the use of additional cleanup procedures may be required.

16. Analysis of Complex Samples

16.1 Some samples may contain high levels (greater than 1 µg/L) of the analytes of interest, interfering analytes, and/or polymeric materials. Some samples may not concentrate to 1.0 mL (section 10.3.3.3.2); others may overload the GC column and/or detector.

16.2 When an interference is known or suspected to be present, the laboratory should attempt to clean up the sample extract using the SPE cartridge (section 11.2), by Florisil® (Section 11.3), Alumina (Section 11.4), sulfur removal (section 11.5), or another clean up procedure appropriate to the analytes of interest. If these techniques do not remove the interference, the extract is diluted by a known factor and reanalyzed (section 12). Dilution until the extract is lightly colored is preferable. Typical dilution factors are 2, 5, and 10.

16.3 Recovery of surrogate(s)—In most samples, surrogate recoveries will be similar to those from reagent water. If surrogate recovery is outside the limits developed in Section 8.6, re-extract and reanalyze the sample if there is sufficient sample and if it is within the 7-day extraction holding time. If surrogate recovery is still outside this range, extract and analyze one-tenth the volume of sample to overcome any matrix interference problems. If a sample is highly colored or suspected to be high in concentration, a 1–L

sample aliquot and a 100-mL sample aliquot could be extracted simultaneously and still meet the holding time criteria, while providing information about a complex matrix.

16.4 Recovery of the matrix spike and matrix spike duplicate (MS/MSD)—In most samples, MS/MSD recoveries will be similar to those from reagent water. If either the MS or MSD recovery is outside the range specified in Section 8.3.3, one-tenth the volume of sample is spiked and analyzed. If the matrix spike recovery is still outside the range, the result for the unspiked sample may not be reported or used for permitting or regulatory compliance purposes. See Section 8.1.7 for dispositions of failures. Poor matrix spike recovery does not relieve a discharger or permittee of reporting timely results.

17. Method Performance

17.1 This method was tested for linearity of spike recovery from reagent water and has been demonstrated to be applicable over the concentration range from 4x MDL to 1000x MDL with the following exceptions: Chlordane recovery at 4x MDL was low (60%); Toxaphene recovery was demonstrated linear over the range of 10x MDL to 1000x MDL (Reference 3).

17.2 The 1984 version of this method was tested by 20 laboratories using reagent water, drinking water, surface water, and three industrial wastewaters spiked at six concentrations (Reference 2). Concentrations used in the study ranged from 0.5 to 30 µg/L for single-component pesticides and from 8.5 to 400 µg/L for multi-component analytes. These data are for a subset of analytes described in the current version of the method.

17.3 During the development of Method 1656, a similar EPA procedure for the organochlorine pesticides, single-operator precision, overall precision, and method accuracy were found to be directly related to the concentration of the analyte and essentially independent of the sample matrix. Linear equations to describe these relationships are presented in Table 5.

18. Pollution Prevention

18.1 Pollution prevention encompasses any technique that reduces or eliminates the quantity or toxicity of waste at the point of generation. Many opportunities for pollution prevention exist in laboratory operations. EPA has established a preferred hierarchy of environmental management techniques that places pollution prevention as the management option of first choice. Whenever feasible, the laboratory should use pollution prevention techniques to address waste generation. When wastes cannot be reduced at the source, the Agency recommends recycling as the next best option.

18.2 The analytes in this method are used in extremely small amounts and pose little threat to the environment when managed properly. Standards should be prepared in volumes consistent with laboratory use to minimize the disposal of excess volumes of expired standards. This method utilizes significant quantities of methylene chloride. Laboratories are encouraged to recover and recycle this and other solvents during extract concentration.

18.3 For information about pollution prevention that may be applied to laboratories and research institutions, consult ''Less is Better: Laboratory Chemical Management for Waste Reduction'' (Reference 19), available from the American Chemical Society's Department of Governmental Relations and Science Policy, 1155 16th Street NW., Washington DC 20036, 202–872–4477.

19. Waste Management

19.1 The laboratory is responsible for complying with all Federal, State, and local regulations governing waste management, particularly the hazardous waste identification rules and land disposal restrictions, and to protect the air, water, and land by minimizing and controlling all releases from fume hoods and bench operations. Compliance is also required with any sewage discharge permits and regulations. An overview of requirements can be found in Environmental Management Guide for Small Laboratories (EPA 233–B–98–001).

19.2 Samples at pH <2, or pH >12, are hazardous and must be handled and disposed of as hazardous waste, or neutralized and disposed of in accordance with all federal, state, and local regulations. It is the laboratory's responsibility to comply with all federal, state, and local regulations governing waste management, particularly the hazardous waste identification rules and land disposal restrictions. The laboratory using this method has the responsibility to protect the air, water, and land by minimizing and controlling all releases from fume hoods and bench operations. Compliance is also required with any sewage discharge permits and regulations. For further information on waste management, see ''The Waste Management Manual for Laboratory Personnel,'' also available from the American Chemical Society at the address in section 18.3.

19.3 Many analytes in this method decompose above 500 °C. Low-level waste such as absorbent paper, tissues, animal remains, and plastic gloves may be burned in an appropriate incinerator. Gross quantities of neat or highly concentrated solutions of toxic or hazardous chemicals should be packaged securely and disposed of through commercial or governmental channels that are capable of handling toxic wastes.

19.4 For further information on waste management, consult The Waste Management Manual for Laboratory Personnel and

Less is Better-Laboratory Chemical Management for Waste Reduction, available from the American Chemical Society's Department of Government Relations and Science Policy, 1155 16th Street NW., Washington, DC 20036, 202–872–4477.

20. References

1. ''Determination of Pesticides and PCBs in Industrial and Municipal Wastewaters,'' EPA 600/4–82–023, National Technical Information Service, PB82–214222, Springfield, Virginia 22161, April 1982.
2. ''EPA Method Study 18 Method 608-Organochlorine Pesticides and PCBs,'' EPA 600/4–84–061, National Technical Information Service, PB84–211358, Springfield, Virginia 22161, June 1984.
3. ''Method Detection Limit and Analytical Curve Studies, EPA Methods 606, 607, and 608,'' Special letter report for EPA Contract 68–03–2606, U.S. Environmental Protection Agency, Environmental Monitoring and Support Laboratory, Cincinnati, Ohio 45268, June 1980.
4. ASTM Annual Book of Standards, Part 31, D3694–78. ''Standard Practice for Preparation of Sample Containers and for Preservation of Organic Constituents,'' American Society for Testing and Materials, Philadelphia.
5. Giam, C.S., Chan, H.S., and Nef, G.S. ''Sensitive Method for Determination of Phthalate Ester Plasticizers in Open-Ocean Biota Samples,'' Analytical Chemistry, 47:2225 (1975).
6. Giam, C.S. and Chan, H.S. ''Control of Blanks in the Analysis of Phthalates in Air and Ocean Biota Samples,'' U.S. National Bureau of Standards, Special Publication 442, pp. 701–708, 1976.
7. Solutions to Analytical Chemistry Problems with Clean Water Act Methods, EPA 821–R–07–002, March 2007.
8. ''Carcinogens-Working With Carcinogens,'' Department of Health, Education, and Welfare, Public Health Service, Center for Disease Control, National Institute for Occupational Safety and Health, Publication No. 77–206, August 1977.
9. ''Occupational Exposure to Hazardous Chemicals in Laboratories,'' (29 CFR 1910.1450), Occupational Safety and Health Administration, OSHA.
10. 40 CFR 136.6(b)(4)(j).
11. Mills, P.A. ''Variation of Florisil Activity: Simple Method for Measuring Absorbent Capacity and Its Use in Standardizing Florisil Columns,'' Journal of the Association of Official Analytical Chemists, 51:29, (1968).
12. 40 CFR 136.6(b)(2)(i).
13. Protocol for EPA Approval of New Methods for Organic and Inorganic Analytes in Wastewater and Drinking Water (EPA–821–B–98–003) March 1999.
14. Methods 4500 Cl F and 4500 Cl G, Standard Methods for the Examination of Water and Wastewater, published jointly by the American Public Health Association, American Water Works Association, and Water Environment Federation, 1015 Fifteenth St., Washington, DC 20005, 20th Edition, 2000.
15. ''Manual of Analytical Methods for the Analysis of Pesticides in Human and Environmental Samples,'' EPA–600/8–80–038, U.S. Environmental Protection Agency, Health Effects Research Laboratory, Research Triangle Park, North Carolina.
16. USEPA, 2000, Method 1656 Organo-Halide Pesticides In Wastewater, Soil, Sludge, Sediment, and Tissue by GC/HSD, EPA–821–R–00–017, September 2000.
17. USEPA, 2010, Method 1668C Chlorinated Biphenyl Congeners in Water, Soil, Sediment, Biosolids, and Tissue by HRGC/HRMS, EPA–820–R–10–005, April 2010.
18. USEPA, 2007, Method 1699: Pesticides in Water, Soil, Sediment, Biosolids, and Tissue by HRGC/HRMS, EPA–821–R–08–001, December 2007.
19. ''Less is Better,'' American Chemical Society on-line publication, *http://www.acs.org/content/dam/acsorg/about/governance/committees/chemicalsafety/publications/less-is-better.pdf*.
20. EPA Method 608 ATP 3M0222, An alternative test procedure for the measurement of organochlorine pesticides and polychlorinated biphenyls in waste water. FEDERAL REGISTER, Vol. 60, No. 148 August 2, 1995.

21. Tables

TABLE 1—PESTICIDES [1]

Analyte	CAS No.	MDL [2] (ng/L)	ML [3] (ng/L)
Aldrin	309–00–2	4	12
alpha-BHC	319–84–6	3	9
beta-BHC	319–85–7	6	18
delta-BHC	319–86–8	9	27
gamma-BHC (Lindane)	58–89–9	4	12
alpha-Chlordane [4]	5103–71–9	14	42
gamma-Chlordane [4]	5103–74–2	14	42
4,4′-DDD	72–54–8	11	33
4,4′-DDE	72–55–9	4	12
4,4′-DDT	50–29–3	12	36

TABLE 1—PESTICIDES [1]—Continued

Analyte	CAS No.	MDL [2] (ng/L)	ML [3] (ng/L)
Dieldrin	60–57–1	2	6
Endosulfan I	959–98–8	14	42
Endosulfan II	33213–65–9	4	12
Endosulfan sulfate	1031–07–8	66	198
Endrin	72–20–8	6	18
Endrin aldehyde	7421–93–4	23	70
Heptachlor	76–44–8	3	9
Heptachlor epoxide	1024–57–3	83	249

[1] All analytes in this table are Priority Pollutants (40 CFR part 423, appendix A).
[2] 40 CFR part 136, appendix B, June 30, 1986.
[3] ML = Minimum Level—see Glossary for definition and derivation, calculated as 3 times the MDL.
[4] MDL based on the MDL for Chlordane.

TABLE 2—ADDITIONAL ANALYTES

Analyte	CAS No.	MDL [3] (ng/L)	ML [4] (ng/L)
Acephate	30560–19–1		
Alachlor	15972–60–8		
Atrazine	1912–24–9		
Benfluralin (Benefin)	1861–40–1		
Bromacil	314–40–9		
Bromoxynil octanoate	1689–99–2		
Butachlor	23184–66–9		
Captafol	2425–06–1		
Captan	133–06–2		
Carbophenothion (Trithion)	786–19–6		
Chlorobenzilate	510–15–6		
Chloroneb (Terraneb)	2675–77–6		
Chloropropylate (Acaralate)	5836–10–2		
Chlorothalonil	1897–45–6		
Cyanazine	21725–46–2		
DCPA (Dacthal)	1861–32–1		
2,4′-DDD	53–19–0		
2,4′-DDE	3424–82–6		
2,4′-DDT	789–02–6		
Diallate (Avadex)	2303–16–4		
1,2-Dibromo-3-chloropropane (DBCP)	96–12–8		
Dichlone	117–80–6		
Dichloran	99–30–9		
Dicofol	115–32–2		
Endrin ketone	53494–70–5		
Ethalfluralin (Sonalan)	55283–68–6		
Etridiazole	2593–15–9		
Fenarimol (Rubigan)	60168–88–9		
Hexachlorobenzene [1]	118–74–1		
Hexachlorocyclopentadiene [1]	77–47–4		
Isodrin	465–73–6		
Isopropalin (Paarlan)	33820–53–0		
Kepone	143–50–0		
Methoxychlor	72–43–5		
Metolachlor	51218–45–2		
Metribuzin	21087–64–9		
Mirex	2385–85–5		
Nitrofen (TOK)	1836–75–5		
cis-Nonachlor	5103–73–1		
trans-Nonachlor	39765–80–5		
Norfluorazon	27314–13–2		
Octachlorostyrene	29082–74–4		
Oxychlordane	27304–13–8		
PCNB (Pentachloronitrobenzene)	82–68–8		
Pendamethalin (Prowl)	40487–42–1		
cis-Permethrin	61949–76–6		
trans-Permethrin	61949–77–7		
Perthane (Ethylan)	72–56–0		
Propachlor	1918–16–7		
Propanil	709–98–8		
Propazine	139–40–2		
Quintozene	82–68–8		
Simazine	122–34–9		

TABLE 2—ADDITIONAL ANALYTES—Continued

Analyte	CAS No.	MDL [3] (ng/L)	ML [4] (ng/L)
Strobane	8001–50–1		
Technazene	117–18–0		
Technical Chlordane [2]	.....		
Terbacil	5902–51–2		
Terbuthylazine	5915–41–3		
Toxaphene [1]	8001–35–2	240	720
Trifluralin	1582–09–8		
PCB–1016 [1]	12674–11–2		
PCB–1221 [1]	11104–28–2		
PCB–1232 [1]	11141–16–5		
PCB–1242 [1]	53469–21–9	65	95
PCB–1248 [1]	12672–29–6		
PCB–1254 [1]	11097–69–1		
PCB–1260 [1]	11096–82–5		
PCB–1268	11100–14–4		

[1] Priority Pollutants (40 CFR part 423, appendix A).
[2] Technical Chlordane may be used in cases where historical reporting has only been for this form of Chlordane.
[3] 40 CFR part 136, appendix B, June 30, 1986.
[4] ML = Minimum Level—see Glossary for definition and derivation, calculated as 3 times the MDL.

TABLE 3—EXAMPLE RETENTION TIMES [1]

Analyte	Retention time (min) [2]	
	DB–608	DB–1701
Acephate	5.03	([3])
Trifluralin	5.16	6.79
Ethalfluralin	5.28	6.49
Benfluralin	5.53	6.87
Diallate-A	7.15	6.23
Diallate-B	7.42	6.77
alpha-BHC	8.14	7.44
PCNB	9.03	7.58
Simazine	9.06	9.29
Atrazine	9.12	9.12
Terbuthylazine	9.17	9.46
gamma-BHC (Lindane)	9.52	9.91
beta-BHC	9.86	11.90
Heptachlor	10.66	10.55
Chlorothalonil	10.66	10.96
Dichlone	10.80	([4])
Terbacil	11.11	12.63
delta-BHC	11.20	12.98
Alachlor	11.57	11.06
Propanil	11.60	14.10
Aldrin	11.84	11.46
DCPA	12.18	12.09
Metribuzin	12.80	11.68
Triadimefon	12.99	13.57
Isopropalin	13.06	13.37
Isodrin	13.47	11.12
Heptachlor epoxide	13.97	12.56
Pendamethalin	14.21	13.46
Bromacil	14.39	([3])
alpha-Chlordane	14.63	14.20
Butachlor	15.03	15.69
gamma-Chlordane	15.24	14.36
Endosulfan I	15.25	13.87
4,4′-DDE	16.34	14.84
Dieldrin	16.41	15.25
Captan	16.83	15.43
Chlorobenzilate	17.58	17.28
Endrin	17.80	15.86
Nitrofen (TOK)	17.86	17.47
Kepone	17.92	([3] [5])
4,4′-DDD	18.43	17.77
Endosulfan II	18.45	18.57
Bromoxynil octanoate	18.85	18.57
4,4′-DDT	19.48	18.32

TABLE 3—EXAMPLE RETENTION TIMES [1]—Continued

Analyte	Retention time (min) [2]	
	DB–608	DB–1701
Carbophenothion	19.65	18.21
Endrin aldehyde	19.72	19.18
Endosulfan sulfate	20.21	20.37
Captafol	22.51	21.22
Norfluorazon	20.68	22.01
Mirex	22.75	19.79
Methoxychlor	22.80	20.68
Endrin ketone	23.00	21.79
Fenarimol	24.53	23.79
cis-Permethrin	25.00	23.59
trans-Permethrin	25.62	23.92
PCB–1016.		
PCB–1221.		
PCB–1232.		
PCB–1242.		
PCB–1248.		
PCB–1254.		
PCB–1260 (5 peaks)	15.44	14.64
	15.73	15.36
	16.94	16.53
	17.28	18.70
	19.17	19.92
Toxaphene (5 peaks)	16.60	16.60
	17.37	17.52
	18.11	17.92
	19.46	18.73
	19.69	19.00

[1] Data from EPA Method 1656 (Reference 16).
[2] Columns: 30-m long x 0.53-mm ID fused-silica capillary; DB–608, 0.83 µm; and DB–1701, 1.0 µm.
Conditions suggested to meet retention times shown: 150 °C for 0.5 minute, 150–270 °C at 5 °C/min, and 270 °C until *trans*-Permethrin elutes.
Carrier gas flow rates approximately 7 mL/min.
[3] Does not elute from DB–1701 column at level tested.
[4] Not recovered from water at the levels tested.
[5] Dichlone and Kepone do not elute from the DB–1701 column and should be confirmed on DB–5.

TABLE 4—QC ACCEPTANCE CRITERIA

Analyte	Calibration verification (%)	Test concentration (µg/L)	Limit for s (% SD)	Range for $\bar{X}$ (%)	Range for P (%)	Maximum MS/MSD RPD (%)
Aldrin	75–125	2.0	25	54–130	42–140	35
alpha-BHC	69–125	2.0	28	49–130	37–140	36
beta-BHC	75–125	2.0	38	39–130	17–147	44
delta-BHC	75–125	2.0	43	51–130	19–140	52
gamma-BHC	75–125	2.0	29	43–130	32–140	39
alpha-Chlordane	73–125	50.0	24	55–130	45–140	35
gamma-Chlordane	75–125	50.0	24	55–130	45–140	35
4,4′-DDD	75–125	10.0	32	48–130	31–141	39
4,4′-DDE	75–125	2.0	30	54–130	30–145	35
4,4′-DDT	75–125	10.0	39	46–137	25–160	42
Dieldrin	48–125	2.0	42	58–130	36–146	49
Endosulfan I	75–125	2.0	25	57–141	45–153	28
Endosulfan II	75–125	10.0	63	22–171	D–202	53
Endosulfan sulfate	70–125	10.0	32	38–132	26–144	38
Endrin	5–125	10.0	42	51–130	30–147	48
Heptachlor	75–125	2.0	28	43–130	34–140	43
Heptachlor epoxide	75–125	2.0	22	57–132	37–142	26
Toxaphene	68–134	50.0	30	56–130	41–140	41
PCB–1016	75–125	50.0	24	61–103	50–140	36
PCB–1221	75–125	50.0	50	44–150	15–178	48
PCB–1232	75–125	50.0	32	28–197	10–215	25
PCB–1242	75–125	50.0	26	50–139	39–150	29
PCB–1248	75–125	50.0	32	58–140	38–158	35
PCB–1254	75–125	50.0	34	44–130	29–140	45
PCB–1260	75–125	50.0	28	37–130	8–140	38

S = Standard deviation of four recovery measurements for the DOC (section 8.2.4).
$\bar{X}$ = Average of four recovery measurements for the DOC (section 8.2.4).

P = Recovery for the LCS (section 8.4.3).

Note: These criteria were developed from data in Table 5 (Reference 2). Where necessary, limits for recovery have been broadened to assure applicability to concentrations below those in Table 5.

TABLE 5—PRECISION AND RECOVERY AS FUNCTIONS OF CONCENTRATION

Analyte	Recovery, X′ (μg/L)	Single analyst precision, s_r' (μg/L)	Overall precision, S′ (μg/L)
Aldrin	0.81C + 0.04	0.16($\bar{X}$) − 0.04	0.20($\bar{X}$) − 0.01
alpha-BHC	0.84C + 0.03	0.13($\bar{X}$) + 0.04	0.23($\bar{X}$) − 0.00
beta-BHC	0.81C + 0.07	0.22($\bar{X}$) − 0.02	0.33($\bar{X}$) − 0.05
delta-BHC	0.81C + 0.07	0.18($\bar{X}$) + 0.09	0.25($\bar{X}$) + 0.03
gamma-BHC (Lindane)	0.82C − 0.05	0.12($\bar{X}$) + 0.06	0.22($\bar{X}$) + 0.04
Chlordane	0.82C − 0.04	0.13($\bar{X}$) + 0.13	0.18($\bar{X}$) + 0.18
4,4′-DDD	0.84C + 0.30	0.20($\bar{X}$) − 0.18	0.27($\bar{X}$) − 0.14
4,4′-DDE	0.85C + 0.14	0.13($\bar{X}$) + 0.06	0.28($\bar{X}$) − 0.09
4,4′-DDT	0.93C − 0.13	0.17($\bar{X}$) + 0.39	0.31($\bar{X}$) − 0.21
Dieldrin	0.90C + 0.02	0.12($\bar{X}$) + 0.19	0.16($\bar{X}$) + 0.16
Endosulfan I	0.97C + 0.04	0.10($\bar{X}$) + 0.07	0.18($\bar{X}$) + 0.08
Endosulfan II	0.93C + 0.34	0.41($\bar{X}$) − 0.65	0.47($\bar{X}$) − 0.20
Endosulfan sulfate	0.89C − 0.37	0.13($\bar{X}$) + 0.33	0.24($\bar{X}$) + 0.35
Endrin	0.89C − 0.04	0.20($\bar{X}$) + 0.25	0.24($\bar{X}$) + 0.25
Heptachlor	0.69C + 0.04	0.06($\bar{X}$) + 0.13	0.16($\bar{X}$) + 0.08
Heptachlor epoxide	0.89C + 0.10	0.18($\bar{X}$) − 0.11	0.25($\bar{X}$) − 0.08
Toxaphene	0.80C + 1.74	0.09($\bar{X}$) + 3.20	0.20($\bar{X}$) + 0.22
PCB–1016	0.81C + 0.50	0.13($\bar{X}$) + 0.15	0.15($\bar{X}$) + 0.45
PCB–1221	0.96C + 0.65	0.29($\bar{X}$) − 0.76	0.35($\bar{X}$) − 0.62
PCB–1232	0.91C + 10.8	0.21($\bar{X}$) − 1.93	0.31($\bar{X}$) + 3.50
PCB–1242	0.93C + 0.70	0.11($\bar{X}$) + 1.40	0.21($\bar{X}$) + 1.52
PCB–1248	0.97C + 1.06	0.17($\bar{X}$) + 0.41	0.25($\bar{X}$) − 0.37
PCB–1254	0.76C + 2.07	0.15($\bar{X}$) + 1.66	0.17($\bar{X}$) + 3.62
PCB–1260	0.66C + 3.76	0.22($\bar{X}$) − 2.37	0.39($\bar{X}$) − 4.86

X′ = Expected recovery for one or more measurements of a sample containing a concentration of C, in μg/L.

TABLE 6—DISTRIBUTION OF CHLORINATED PESTICIDES AND PCBS INTO FLORISIL® COLUMN FRACTIONS

Analyte	Percent Recovery by Fraction [1]		
	1	2	3
Aldrin	100		
alpha-BHC	100		
beta-BHC	97		
delta-BHC	98		
gamma-BHC (Lindane)	100		
Chlordane	100		
4,4′-DDD	99		
4,4′-DDE	.....	98	
4,4′-DDT	100		
Dieldrin	0	100	
Endosulfan I	37	64	
Endosulfan II	0	7	91
Endosulfan sulfate	0	0	106
Endrin	4	96	
Endrin aldehyde	0	68	26
Heptachlor	100		
Heptachlor epoxide	100		
Toxaphene	96		
PCB–1016	97		
PCB–1221	97		
PCB–1232	95	4	
PCB–1242	97		
PCB–1248	103		
PCB–1254	90		
PCB–1260.			

[1] Eluant composition:
Fraction 1—6% ethyl ether in hexane.
Fraction 2—15% ethyl ether in hexane.
Fraction 3—50% ethyl ether in hexane.

TABLE 7—SUGGESTED CALIBRATION GROUPS [1]

Analyte
Calibration Group 1:
Acephate
Alachlor
Atrazine
beta-BHC
Bromoxynil octanoate
Captafol
Diallate
Endosulfan sulfate
Endrin
Isodrin
Pendimethalin (Prowl)
trans-Permethrin
Calibration Group 2:
alpha-BHC
DCPA
4,4′-DDE
4,4′-DDT
Dichlone
Ethalfluralin
Fenarimol
Methoxychlor
Metribuzin
Calibration Group 3:
gamma-BHC (Lindane)
gamma-Chlordane
Endrin ketone
Heptachlor epoxide
Isopropalin
Nitrofen (TOK)
PCNB
cis-Permethrin
Trifluralin
Callibration Group 4:
Benfluralin
Chlorobenzilate
Dieldrin
Endosulfan I

TABLE 7—SUGGESTED CALIBRATION GROUPS [1]—Continued

Analyte
Mirex
Terbacil
Terbuthylazine
Triadimefon
Calibration Group 5:
alpha-Chlordane
Captan
Chlorothalonil
4,4′-DDD
Norfluorazon
Simazine
Calibration Group 6:
Aldrin
delta-BHC
Bromacil
Butachlor
Endosulfan II
Heptachlor
Kepone
Calibration Group 7:
Carbophenothion
Chloroneb
Chloropropylate
DBCP
Dicofol
Endrin aldehyde
Etridiazone
Perthane
Propachlor
Propanil
Propazine

[1] The analytes may be organized in other calibration groups, provided that there are no coelution problems and that all QC requirements are met.

22. Figures

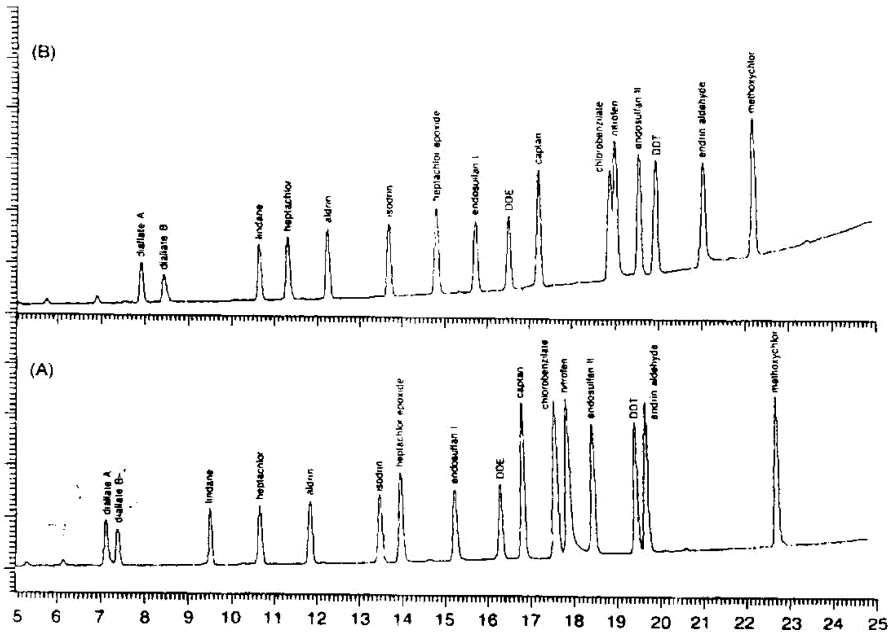

Figure 1 Example Chromatogram of Selected Organochlorine Pesticides

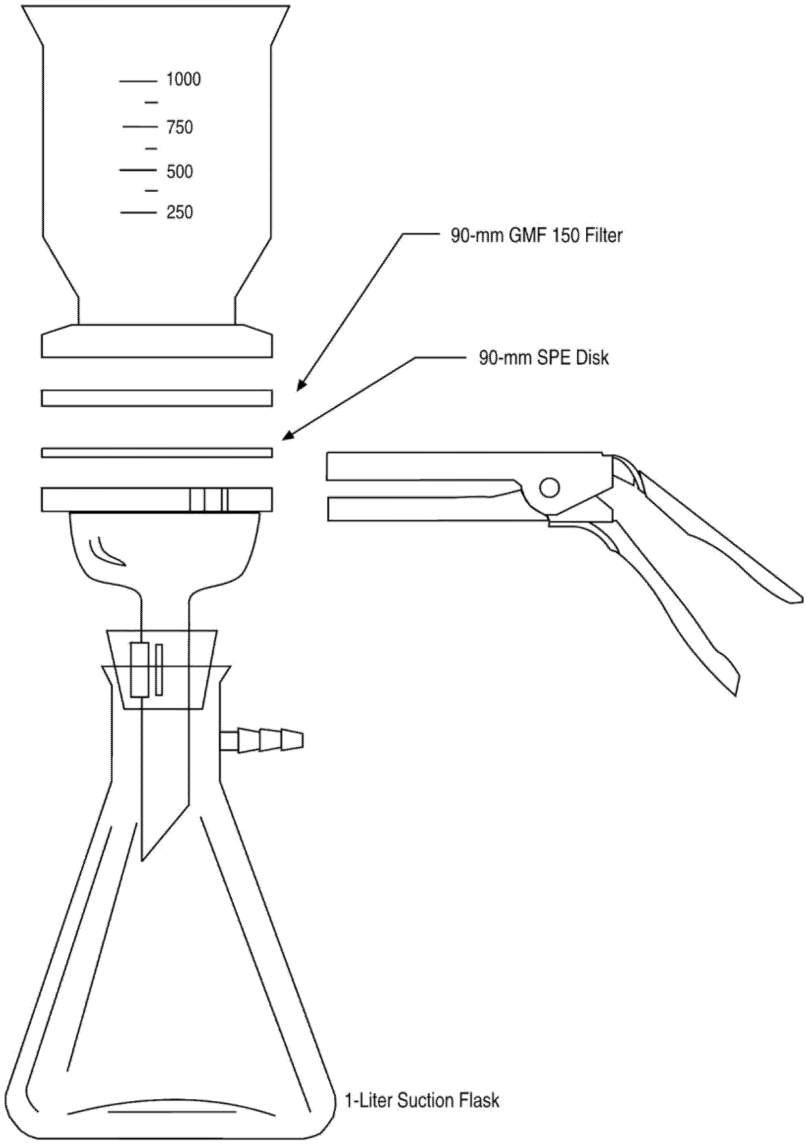

Figure 2 Disk-based solid-phase extraction apparatus

23. Glossary

These definitions and purposes are specific to this method but have been conformed to common usage to the extent possible.

23.1 Units of weight and measure and their abbreviations.

23.1.1 Symbols.

°C degrees Celsius
µg microgram

µL microliter
< less than
≤ less than or equal to
> greater than
% percent

23.1.2 Abbreviations (in alphabetical order).

cm centimeter
g gram
hr hour
ID inside diameter
in. inch
L liter
M molar solution—one mole or gram molecular weight of solute in one liter of solution
mg milligram
min minute
mL milliliter
mm millimeter
N Normality—one equivalent of solute in one liter of solution
ng nanogram
psia pounds-per-square inch absolute
psig pounds-per-square inch gauge
v/v volume per unit volume
w/v weight per unit volume

23.2 Definitions and acronyms (in alphabetical order)

Analyte—A compound or mixture of compounds (e.g., PCBs) tested for by this method. The analytes are listed in Tables 1 and 2.

Analytical batch—The set of samples analyzed on a given instrument during a 24-hour period that begins and ends with calibration verification (sections 7.8 and 13). See also ''Extraction batch.''

Blank (method blank; laboratory blank)—An aliquot of reagent water that is treated exactly as a sample including exposure to all glassware, equipment, solvents, reagents, internal standards, and surrogates that are used with samples. The blank is used to determine if analytes or interferences are present in the laboratory environment, the reagents, or the apparatus.

Calibration factor (CF)—See section 7.5.1.

Calibration standard—A solution prepared from stock solutions and/or a secondary standards and containing the analytes of interest, surrogates, and internal standards. This standard is used to model the response of the GC instrument against analyte concentration.

Calibration verification—The process of confirming that the response of the analytical system remains within specified limits of the calibration.

Calibration verification standard—The standard (section 6.8.4) used to verify calibration (sections 7.8 and 13.6).

Extraction Batch—A set of up to 20 field samples (not including QC samples) started through the extraction process in a given 24-hour shift. Each extraction batch of 20 or fewer samples must be accompanied by a blank (section 8.5), a laboratory control sample (LCS, section 8.4), a matrix spike and duplicate (MS/MSD; section 8.3), resulting in a minimum of five samples (1 field sample, 1 blank, 1 LCS, 1 MS, and 1 MSD) and a maximum of 24 samples (20 field samples, 1 blank, 1 LCS, 1 MS, and 1 MSD) for the batch. If greater than 20 samples are to be extracted in a 24-hour shift, the samples must be separated into extraction batches of 20 or fewer samples.

Field Duplicates—Two samples collected at the same time and place under identical conditions, and treated identically throughout field and laboratory procedures. Results of analyses the field duplicates provide an estimate of the precision associated with sample collection, preservation, and storage, as well as with laboratory procedures.

Field blank—An aliquot of reagent water or other reference matrix that is placed in a sample container in the field, and treated as a sample in all respects, including exposure to sampling site conditions, storage, preservation, and all analytical procedures. The purpose of the field blank is to determine if the field or sample transporting procedures and environments have contaminated the sample. See also ''Blank.''

GC—Gas chromatograph or gas chromatography.

Gel-permeation chromatography (GPC)—A form of liquid chromatography in which the analytes are separated based on exclusion from the solid phase by size.

Internal standard—A compound added to an extract or standard solution in a known amount and used as a reference for quantitation of the analytes of interest and surrogates. Also see Internal standard quantitation.

Internal standard quantitation—A means of determining the concentration of an analyte of interest (Tables 1 and 2) by reference to a compound not expected to be found in a sample.

IDC—Initial Demonstration of Capability (section 8.2); four aliquots of a reference matrix spiked with the analytes of interest and analyzed to establish the ability of the laboratory to generate acceptable precision and recovery. An IDC is performed prior to the first time this method is used and any time the method or instrumentation is modified.

Laboratory Control Sample (LCS; laboratory fortified blank; section 8.4)—An aliquot of reagent water spiked with known quantities of the analytes of interest and surrogates. The LCS is analyzed exactly like a sample. Its purpose is to assure that the results produced by the laboratory remain within the limits specified in this method for precision and recovery.

Laboratory Fortified Sample Matrix—See Matrix spike.

Laboratory reagent blank—See blank.

Matrix spike (MS) and matrix spike duplicate (MSD) (laboratory fortified sample matrix and duplicate)—Two aliquots of an environmental sample to which known quantities of the analytes of interest and surrogates are added in the laboratory. The MS/MSD are prepared and analyzed exactly like a field sample. Their purpose is to quantify any additional bias and imprecision caused by the sample matrix. The background concentrations of the analytes in the sample matrix must be determined in a separate aliquot and the measured values in the MS/MSD corrected for background concentrations.

May—This action, activity, or procedural step is neither required nor prohibited.

May not—This action, activity, or procedural step is prohibited.

Method detection limit (MDL)—A detection limit determined by the procedure at 40 CFR part 136, appendix B. The MDLs determined by EPA are listed in Tables 1 and 2. As noted in section 1.6, use the MDLs in Tables 1 and 2 in conjunction with current MDL data from the laboratory actually analyzing samples to assess the sensitivity of this procedure relative to project objectives and regulatory requirements (where applicable).

Minimum level (ML)—The term ''minimum level'' refers to either the sample concentration equivalent to the lowest calibration point in a method or a multiple of the method detection limit (MDL), whichever is higher. Minimum levels may be obtained in several ways: They may be published in a method; they may be based on the lowest acceptable calibration point used by a laboratory; or they may be calculated by multiplying the MDL in a method, or the MDL determined by a laboratory, by a factor of 3. For the purposes of NPDES compliance monitoring, EPA considers the following terms to be synonymous: ''quantitation limit,'' ''reporting limit,'' and ''minimum level.''

MS—Mass spectrometer or mass spectrometry.

Must—This action, activity, or procedural step is required.

Preparation blank—See blank.

Reagent water—Water demonstrated to be free from the analytes of interest and potentially interfering substances at the MDLs for the analytes in this method.

Regulatory compliance limit—A limit on the concentration or amount of a pollutant or contaminant specified in a nationwide standard, in a permit, or otherwise established by a regulatory/control authority.

Relative standard deviation (RSD)—The standard deviation times 100 divided by the mean. Also termed ''coefficient of variation.''

RF—Response factor. See section 7.6.2.

RPD—Relative percent difference.

RSD—See relative standard deviation.

Safety Data Sheet (SDS)—Written information on a chemical's toxicity, health hazards, physical properties, fire, and reactivity, including storage, spill, and handling precautions that meet the requirements of OSHA, 29 CFR 1910.1200(g) and appendix D to §1910.1200. United Nations Globally Harmonized System of Classification and Labelling of Chemicals (GHS), third revised edition, United Nations, 2009.

Should—This action, activity, or procedural step is suggested but not required.

SPE—Solid-phase extraction; a sample extraction or extract cleanup technique in which an analyte is selectively removed from a sample or extract by passage over or through a material capable of reversibly adsorbing the analyte.

Stock solution—A solution containing an analyte that is prepared using a reference material traceable to EPA, the National Institute of Science and Technology (NIST), or a source that will attest to the purity and authenticity of the reference material.

Surrogate—A compound unlikely to be found in a sample, which is spiked into the sample in a known amount before extraction, and which is quantified with the same procedures used to quantify other sample components. The purpose of the surrogate is to monitor method performance with each sample.

METHOD 609—NITROAROMATICS AND ISOPHORONE

1. Scope and Application

1.1 This method covers the determination of certain nitroaromatics and isophorone. The following parameters may be determined by this method:

Parameter	STORET No.	CAS No.
2,4-Dinitrotoluene	34611	121–14–2
2,6-Dinitrotoluene	34626	606–20–2
Isophorone	34408	78–59–1
Nitrobenzene	34447	98–95–3

1.2 This is a gas chromatographic (GC) method applicable to the determination of the compounds listed above in municipal and industrial discharges as provided under 40 CFR 136.1. When this method is used to analyze unfamiliar samples for any or all of the compounds above, compound identifications should be supported by at least one additional qualitative technique. This method describes analytical conditions for a second gas chromatographic column that can be used to confirm measurements made with the primary column. Method 625 provides gas chromatograph/mass spectrometer (GC/MS) conditions appropriate for the qualitative and quantitative confirmation of results for all of the parameters listed above, using the extract produced by this method.

1.3 The method detection limit (MDL, defined in Section 14.1)[1] for each parameter is listed in Table 1. The MDL for a specific wastewater may differ from those listed, depending upon the nature of interferences in the sample matrix.

1.4 The sample extraction and concentration steps in this method are essentially the same as in Methods 606, 608, 611, and 612. Thus, a single sample may be extracted to measure the parameters included in the scope of each of these methods. When cleanup is required, the concentration levels must be high enough to permit selecting aliquots, as necessary, to apply appropriate cleanup procedures. The analyst is allowed the latitude, under Section 12, to select chromatographic conditions appropriate for the simultaneous measurement of combinations of these parameters.

1.5 Any modification of this method, beyond those expressly permitted, shall be considered as a major modification subject to application and approval of alternate test procedures under 40 CFR 136.4 and 136.5.

1.6 This method is restricted to use by or under the supervision of analysts experienced in the use of a gas chromatograph and in the interpretation of gas chromatograms. Each analyst must demonstrate the ability to generate acceptable results with this method using the procedure described in Section 8.2.

2. Summary of Method

2.1 A measured volume of sample, approximately 1–L, is extracted with methylene chloride using a separatory funnel. The methylene chloride extract is dried and exchanged to hexane during concentration to a volume of 10 mL or less. Isophorone and nitrobenzene are measured by flame ionization detector gas chromatography (FIDGC). The dinitrotoluenes are measured by electron capture detector gas chromatography (ECDGC).[2]

2.2 The method provides a Florisil column cleanup procedure to aid in the elimination of interferences that may be encountered.

3. Interferences

3.1 Method interferences may be caused by contaminants in solvents, reagents, glassware, and other sample processing hardware that lead to discrete artifacts and/or elevated baseliles in gas chromatograms. All of these materials must be routinely demonstrated to be free from interferences under the conditions of the analysis by running laboratory reagent blanks as described in Section 8.1.3.

3.1.1 Glassware must be scrupulously cleaned.[3] Clean all glassware as soon as possible after use by rinsing with the last solvent used in it. Solvent rinsing should be followed by detergent washing with hot water, and rinses with tap water and distilled water. The glassware should then be drained dry, and heated in a muffle furnace at 400 °C for 15 to 30 min. Some thermally stable materials, such as PCBs, may not be eliminated by this treatment. Solvent rinses with acetone and pesticide quality hexane may be substituted for the muffle furnace heating. Thorough rinsing with such solvents usually eliminates PCB interference. Volumetric ware should not be heated in a muffle furnace. After drying and cooling, glassware should be sealed and stored in a clean environment to prevent any accumulation of dust or other contaminants. Store inverted or capped with aluminum foil.

3.1.2 The use of high purity reagents and solvents helps to minimize interference problems. Purification of solvents by distillation in all-glass systems may be required.

3.2 Matrix interferences may be caused by contaminants that are co-extracted from the sample. The extent of matrix interferences will vary considerably from source to source, depending upon the nature and diversity of the industrial complex or municipality being sampled. The cleanup procedure in Section 11 can be used to overcome many of these interferences, but unique samples may require additional cleanup approaches to achieve the MDL listed in Table 1.

4. Safety

4.1 The toxicity or carcinogenicity of each reagent used in this method has not been precisely defined; however, each chemical compound should be treated as a potential health hazard. From this viewpoint, exposure to these chemicals must be reduced to the lowest possible level by whatever means available. The laboratory is responsible for maintaining a current awareness file of OSHA regulations regarding the safe handling of the chemicals specified in this method. A reference file of material data handling sheets should also be made available to all personnel involved in the chemical analysis. Additional references to laboratory safety are available and have been identified[4M6] for the information of the analyst.

5. Apparatus and Materials

5.1 Sampling equipment, for discrete or composite sampling.

5.1.1 Grab sample bottle—1–L or 1-qt, amber glass, fitted with a screw cap lined with Teflon. Foil may be substituted for Teflon if the sample is not corrosive. If amber bottles are not available, protect samples from light. The bottle and cap liner must be washed, rinsed with acetone or methylene chloride, and dried before use to minimize contamination.

5.1.2 Automatic sampler (optional)—The sampler must incorporate glass sample containers for the collection of a minimum of

250 mL of sample. Sample containers must be kept refrigerated at 4 °C and protected from light during compositing. If the sampler uses a peristaltic pump, a minimum length of compressible silicone rubber tubing may be used. Before use, however, the compressible tubing should be thoroughly rinsed with methanol, followed by repeated rinsings with distilled water to minimize the potential for contamination of the sample. An integrating flow meter is required to collect flow proportional composites.

5.2 Glassware (All specifications are suggested. Catalog numbers are included for illustration only.):

5.2.1 Separatory funnel—2–L, with Teflon stopcock.

5.2.2 Drying column—Chromatographic column, approximately 400 mm long × 19 mm ID, with coarse frit filter disc.

5.2.3 Chromatographic column—100 mm long × 10 mm ID, with Teflon stopcock.

5.2.4 Concentrator tube, Kuderna-Danish—10-mL, graduated (Kontes K–570050–1025 or equivalent). Calibration must be checked at the volumes employed in the test. Ground glass stopper is used to prevent evaporation of extracts.

5.2.5 Evaporative flask, Kuderna-Danish—500-mL (Kontes K–570001–0500 or equivalent). Attach to concentrator tube with springs.

5.2.6 Snyder column, Kuderna-Danish—Three-ball macro (Kontes K–503000–0121 or equivalent).

5.2.7 Snyder column, Kuderna-Danish—Two-ball micro (Kontes K–569001–0219 or equivalent).

5.2.8 Vials—10 to 15-mL, amber glass, with Teflon-lined screw cap.

5.3 Boiling chips—Approximately 10/40 mesh. Heat to 400 °C for 30 min or Soxhlet extract with methylene chloride.

5.4 Water bath—Heated, with concentric ring cover, capable of temperature control (±2 °C). The bath should be used in a hood.

5.5 Balance—Analytical, capable of accurately weighing 0.0001 g.

5.6 Gas chromatograph—An analytical system complete with gas chromatograph suitable for on-column injection and all required accessories including syringes, analytical columns, gases, detector, and strip-chart recorder. A data system is recommended for measuring peak areas.

5.6.1 Column 1—1.2 m long × 2 or 4 mm ID glass, packed with 1.95% QF–1/1.5% OV–17 on Gas-Chrom Q (80/100 mesh) or equivalent. This column was used to develop the method performance statements given in Section 14. Guidelines for the use of alternate column packings are provided in Section 12.1.

5.6.2 Column 2—3.0 m long × 2 or 4 mm ID glass, packed with 3% OV–101 on Gas-Chrom Q (80/100 mesh) or equivalent.

5.6.3 Detectors—Flame ionization and electron capture detectors. The flame ionization detector (FID) is used when determining isophorone and nitrobenzene. The electron capture detector (ECD) is used when determining the dinitrotoluenes. Both detectors have proven effective in the analysis of wastewaters and were used in develop the method performance statements in Section 14. Guidelines for the use to alternate detectors are provided in Section 12.1.

6. Reagents

6.1 Reagent water—Reagent water is defined as a water in which an interferent is not observed at the MDL of the parameters of interest.

6.2 Sodium hydroxide solution (10 N)—Dissolve 40 g of NaOH (ACS) in reagent water and dilute to 100 mL.

6.3 Sulfuric acid (1 + 1)—Slowly, add 50 mL of H_2SO_4 (ACS, sp. gr. 1.84) to 50 mL of reagent water.

6.4 Acetone, hexane, methanol, methylene chloride—Pesticide quality or equivalent.

6.5 Sodium sulfate—(ACS) Granular, anhydrous. Purify by heating at 400 °C for 4 h in a shallow tray.

6.6 Florisil—PR grade (60/100 mesh). Purchase activated at 1250 °F and store in dark in glass containers with ground glass stoppers or foil-lined screw caps. Before use, activate each batch at least 16 h at 200 °C in a foil-covered glass container and allow to cool.

6.7 Stock standard solutions (1.00 μg/μL)—Stock standard solutions can be prepared from pure standard materials or purchased as certified solutions.

6.7.1 Prepare stock standard solutions by accurately weighing about 0.0100 g of pure material. Dissolve the material in hexane and dilute to volume in a 10-mL volumetric flask. Larger volumes can be used at the convenience of the analyst. When compound purity is assayed to be 96% or greater, the weight can be used without correction to calculate the concentration of the stock standard. Commercially prepared stock standards can be used at any concentration if they are certified by the manufacturer or by an independent source.

6.7.2 Transfer the stock standard solutions into Teflon-sealed screw-cap bottles. Store at 4 °C and protect from light. Stock standard solutions should be checked frequently for signs of degradation or evaporation, especially just prior to preparing calibration standards from them.

6.7.3 Stock standard solutions must be replaced after six months, or sooner if comparison with check standards indicates a problem.

6.8 Quality control check sample concentrate—See Section 8.2.1.

7. Calibration

7.1 Establish gas chromatographic operating conditions equivalent to those given in

Table 1. The gas chromatographic system can be calibrated using the external standard technique (Section 7.2) or the internal standard technique (Section 7.3).

7.2 External standard calibration procedure:

7.2.1 Prepare calibration standards at a minimum of three concentration levels for each parameter of interest by adding volumes of one or more stock standards to a volumetric flask and diluting to volume with hexane. One of the external standards should be at a concentration near, but above, the MDL (Table 1) and the other concentrations should correspond to the expected range of concentrations found in real samples or should define the working range of the detector.

7.2.2 Using injections of 2 to 5 µL, analyze each calibration standard according to Section 12 and tabulate peak height or area responses against the mass injected. The results can be used to prepare a calibration curve for each compound. Alternatively, if the ratio of response to amount injected (calibration factor) is a constant over the working range (<10% relative standard deviation, RSD) linearity through the origin can be assumed and the average ratio or calibration factor can be used in place of a calibration curve.

7.3 Internal standard calibration procedure—To use this approach, the analyst must select one or more internal standards that are similar in analytical behavior to the compounds of interest. The analyst must further demonstrate that the measurement of the internal standard is not affected by method or matrix interferences. Because of these limitations, no internal standard can be suggested that is applicable to all samples.

7.3.1 Prepare calibration standards at a minimum of three concentration levels for each parameter of interest by adding volumes of one or more stock standards to a volumetric flash. To each calibration standard, add a known constant amount of one or more internal standards, and dilute to volume with hexane. One of the standards should be at a concentration near, but above, the MDL and the other concentrations should correspond to the expected range of concentrations found in real samples or should define the working range of the detector.

7.3.2 Using injections of 2 to 5 µL, analyze each calibration standard according to Section 12 and tabulate peak height or area responses against concentration for each compound and internal standard. Calculate response factors (RF) for each compound using Equation 1.

Equation 1.

$$RF = \frac{(A_s)(C_{is})}{(A_{is})(C_s)}$$

where:

A_s = Response for the parameter to be measured.

A_{is} = Response for the internal standard.

C_{is} = Concentration of the internal standard (µg/L).

C_s = Concentration of the parameter to be measured (µg/L).

If the RF value over the working range is a constant (<10% RSD), the RF can be assumed to be invariant and the average RF can be used for calculations. Alternatively, the results can be used to plot a calibration curve of response ratios, A_s/A_{is}, vs. RF.

7.4 The working calibration curve, calibration factor, or RF must be verified on each working day by the measurement of one or more calibration standards. If the response for any parameter varies from the predicted response by more than ±15%, a new calibration curve must be prepared for that compound.

7.5 Before using any cleanup procedure, the analyst must process a series of calibration standards through the procedure to validate elution patterns and the absence of interferences from the reagents.

8. Quality Control

8.1 Each laboratory that uses this method is required to operate a formal quality control program. The minimum requirements of this program consist of an initial demonstration of laboratory capability and an ongoing analysis of spiked samples to evaluate and document data quality. The laboratory must maintain records to document the quality of data that is generated. Ongoing data quality checks are compared with established performance criteria to determine if the results of analyses meet the performance characteristics of the method. When results of sample spikes indicate atypical method performance, a quality control check standard must be analyzed to confirm that the measurements were performed in an in-control mode of operation.

8.1.1 The analyst must make an initial, one-time, demonstration of the ability to generate acceptable accuracy and precision with this method. This ability is established as described in Section 8.2.

8.1.2 In recognition of advances that are occurring in chromatography, the analyst is permitted certain options (detailed in Sections 10.4, 11.1, and 12.1) to improve the separations or lower the cost of measurements. Each time such a modification is made to the method, the analyst is required to repeat the procedure in Section 8.2.

8.1.3 Before processing any samples, the analyst must analyze a reagent water blank to demonstrate that interferences from the analytical system and glassware are under control. Each time a set of samples is extracted or reagents are changed, a reagent water blank must be processed as a safeguard against laboratory contamination.

8.1.4 The laboratory must, on an ongoing basis, spike and analyze a minimum of 10% of all samples to monitor and evaluate laboratory data quality. This procedure is described in Section 8.3.

8.1,5 The laboratory must, on an ongoing basis, demonstrate through the analyses of quality control check standards that the operation of the measurement system is in control. This procedure is described in Section 8.4. The frequency of the check standard analyses is equivalent to 10% of all samples analyzed but may be reduced if spike recoveries from samples (Section 8.3) meet all specified quality control criteria.

8.1.6 The laboratory must maintain performance records to document the quality of data that is generated. This procedure is described in Section 8.5.

8.2 To establish the ability to generate acceptable accuracy and precision, the analyst must perform the following operations.

8.2.1 A quality control (QC) check sample concentrate is required containing each parameter of interest in acetone at a concentration of 20 µg/mL for each dinitrotoluene and 100 µg/mL for isophorone and nitrobenzene. The QC check sample concentrate must be obtained from the U.S. Environmental Protection Agency, Environmental Monitoring and Support Laboratory in Cincinnati, Ohio, if available. If not available from that source, the QC check sample concentrate must be obtained from another external source. If not available from either source above, the QC check sample concentrate must be prepared by the laboratory using stock standards prepared independently from those used for calibration.

8.2.2 Using a pipet, prepare QC check samples at the test concentrations shown in Table 2 by adding 1.00 mL of QC check sample concentrate to each of four 1–L aliquots of reagent water.

8.2.3 Analyze the well-mixed QC check samples according to the method beginning in Section 10.

8.2.4 Calculate the average recovery ($\bar{X}$) in µg/L, and the standard deviation of the recovery (s) in µg/L, for each parameter using the four results.

8.2.5 For each parameter compare s and $\bar{X}$ with the corresponding acceptance criteria for precision and accuracy, respectively, found in Table 2. If s and $\bar{X}$ for all parameters of interest meet the acceptance criteria, the system performance is acceptable and analysis of actual samples can begin. If any individual s exceeds the precision limit or any individual $\bar{X}$ falls outside the range for accuracy, the system performance is unacceptable for that parameter. Locate and correct the source of the problem and repeat the test for all parameters of interest beginning with Section 8.2.2.

8.3 The laboratory must, on an ongoing basis, spike at least 10% of the samples from each sample site being monitored to assess accuracy. For laboratories analyzing one to ten samples per month, at least one spiked sample per month is required.

8.3.1 The concentration of the spike in the sample should be determined as follows:

8.3.1.1 If, as in compliance monitoring, the concentration of a specific parameter in the sample is being checked against a regulatory concentration limit, the spike should be at that limit or 1 to 5 times higher than the background concentration determined in Section 8.3.2, whichever concentration would be larger.

8.3.1.2 If the concentration of a specific parameter in the sample is not being checked against a limit specific to that parameter, the spike should be at the test concentration in Section 8.2.2 or 1 to 5 times higher than the background concentration determined in Section 8.3.2, whichever concentration would be larger.

8.3.1.3 If it is impractical to determile background levels before spiking (e.g., maximum holding times will be exceeded), the spike concentration should be (1) the regulatory concentration limit, if any; or, if none (2) the larger of either 5 times higher than the expected background concentration or the test concentration in Section 8.2.2.

8.3.2 Analyze one sample aliquot to determine the background concentration (B) of each parameter. If necessary, prepare a new QC check sample concentrate (Section 8.2.1) appropriate for the background concentrations in the sample. Spike a second sample aliquot with 1.0 mL of the QC check sample concentrate and analyze it to determine the concentration after spiking (A) of each parameter. Calculate each percent recovery (P) as 100 $(A-B)\%/T$, where T is the known true value of the spike.

8.3.3 Compare the percent recovery (P) for each parameter with the corresponding QC acceptance criteria found in Table 2. These acceptance criteria were calculated to include an allowance for error in measurement of both the background and spike concentrations, assuming a spike to background ratio of 5:1. This error will be accounted for to the extent that the analyst's spike to background ratio approaches 5:1.[7] If spiking was performed at a concentration lower than the test concentration in Section 8.2.2, the analyst must use either the QC acceptance criteria in Table 2, or optional QC acceptance criteria calculated for the specific spike concentration. To calculate optional acceptance criteria for the recovery of a parameter: (1)

Calculate accuracy (X′) using the equation in Table 3, substituting the spike concentration (T) for C; (2) calculate overall precision (S′) using the equation in Table 3, substituting X′ for $\bar{X}$8; (3) calculate the range for recovery at the spike concentration as (100 X′/T) ±2.44 (100 S′/T)%.[7]

8.3.4 If any individual P falls outside the designated range for recovery, that parameter has failed the acceptance criteria. A check standard containing each parameter that failed the criteria must be analyzed as described in Section 8.4.

8.4. If any parameter fails the acceptance criteria for recovery in Section 8.3, a QC check standard containing each parameter that failed must be prepared and analyzed.

NOTE: The frequency for the required analysis of a QC check standard will depend upon the number of parameters being simultaneously tested, the complexity of the sample matrix, and the performance of the laboratory.

8.4.1 Prepare the QC check standard by adding 1.0 mL of QC check sample concentrate (Section 8.2.1 or 8.3.2) to 1 L of reagent water. The QC check standard needs only to contain the parameters that failed criteria in the test in Section 8.3.

8.4.2 Analyze the QC check standard to determine the concentration measured (A) of each parameter. Calculate each percent recovery (P_s) as 100 (A/T)%, where T is the true value of the standard concentration.

8.4.3 Compare the percent recovery (P_s) for each parameter with the corresponding QC acceptance criteria found in Table 2. Only parameters that failed the test in Section 8.3 need to be compared with these criteria. If the recovery of any such parameter falls outside the designated range, the laboratory performance for that parameter is judged to be out of control, and the problem must be immediately identified and corrected. The analytical result for that parameter in the unspiked sample is suspect and may not be reported for regulatory compliance purposes.

8.5 As part of QC program for the laboratory, method accuracy for wastewater samples must be assessed and records must be maintained. After the analysis of five spiked wastewater samples as in Section 8.3, calculate the average percent recovery ($\bar{P}$) and the standard deviation of the percent recovery (s_p). Express the accuracy assessment as a percent recovery interval from $\bar{P} - 2s_p$ to $\bar{P} + 2s_p$. If $\bar{P}$ = 90% and s_p = 10%, for example, the accuracy interval is expressed as 70–110%. Update the accuracy assessment for each parameter on a regular basis (e.g. after each five to ten new accuracy measurements).

8.6 It is recommended that the laboratory adopt additional quality assurance practices for use with this method. The specific practices that are most productive depend upon the needs of the laboratory and the nature of the samples. Field duplicates may be analyzed to assess the precision of the environmental measurements. When doubt exists over the identification of a peak on the chromatogram, confirmatory techniques such as gas chromatography with a dissimilar column, specific element detector, or mass spectrometer must be used. Whenever possible, the laboratory should analyze standard reference materials and participate in relevant performance evaluation studies.

9. Sample Collection, Preservation, and Handling

9.1 Grab samples must be collected in glass containers. Conventional sampling practices[8] should be followed, except that the bottle must not be prerinsed with sample before collection. Composite samples should be collected in refrigerated glass containers in accordance with the requirements of the program. Automatic sampling equipment must be as free as possible of Tygon tubing and other potential sources of contamination.

9.2 All samples must be iced or refrigerated at 4 °C from the time of collection until extraction.

9.3 All samples must be extracted within 7 days of collection and completely analyzed within 40 days of extraction.[2]

10. Sample Extraction

10.1 Mark the water meniscus on the side of the sample bottle for later determination of sample volume. Pour the entire sample into a 2–L separatory funnel. Check the pH of the sample with wide-range pH paper and adjust to within the range of 5 to 9 with sodium hydroxide solution or sulfuric acid.

10.2 Add 60 mL of methylene chloride to the sample bottle, seal, and shake 30 s to rinse the inner surface. Transfer the solvent to the separatory funnel and extract the sample by shaking the funnel for 2 min. with periodic venting to release excess pressure. Allow the organic layer to separate from the water phase for a minimum of 10 min. If the emulsion interface between layers is more than one-third the volume of the solvent layer, the analyst must employ mechanical techniques to complete the phase separation. The optimum technique depends upon the sample, but may include stirring, filtration of the emulsion through glass wool, centrifugation, or other physical methods. Collect the methylene chloride extract in a 250-mL Erlenmeyer flask.

10.3 Add a second 60-mL volume of methylene chloride to the sample bottle and repeat the extraction procedure a second time, combining the extracts in the Erlenmeyer flask. Perform a third extraction in the same manner.

10.4 Assemble a Kuderna-Danish (K-D) concentrator by attaching a 10-mL concentrator tube to a 500-mL evaporative flask. Other concentration devices or techniques may be used in place of the K-D concentrator if the requirements of Section 8.2 are met.

10.5 Pour the combined extract through a solvent-rinsed drying column containing about 10 cm of anhydrous sodium sulfate, and collect the extract in the K-D concentrator. Rinse the Erlenmeyer flask and column with 20 to 30 mL of methylene chloride to complete the quantitative transfer.

10.6 Sections 10.7 and 10.8 describe a procedure for exchanging the methylene chloride solvent to hexane while concentrating the extract volume to 1.0 mL. When it is not necessary to achieve the MDL in Table 2, the solvent exchange may be made by the addition of 50 mL of hexane and concentration to 10 mL as described in Method 606, Sections 10.7 and 10.8.

10.7 Add one or two clean boiling chips to the evaporative flask and attach a three-ball Snyder column. Prewet the Snyder column by adding about 1 mL of methylene chloride to the top. Place the K-D apparatus on a hot water bath (60 to 65 °C) so that the concentrator tube is partially immersed in the hot water, and the entire lower rounded surface of the flask is bathed with hot vapor. Adjust the vertical position of the apparatus and the water temperature as required to complete the concentration in 15 to 20 min. At the proper rate of distillation the balls of the column will actively chatter but the chambers will not flood with condensed solvent. When the apparent volume of liquid reaches 1 mL, remove the K-D apparatus and allow it to drain and cool for at least 10 min.

10.8 Remove the Snyder column and rinse the flask and its lower joint into the concentrator tube with 1 to 2 mL of methylene chloride. A 5-mL syringe is recommended for this operation. Add 1 to 2 mL of hexane and a clean boiling chip to the concentrator tube and attach a two-ball micro-Snyder column. Prewet the column by adding about 0.5 mL of hexane to the top. Place the micro-K-D apparatus on a hot water bath (60 to 65 °C) so that the concentrator tube is partially immersed in the hot water. Adjust the vertical position of the apparatus and the water temperature as required to complete the concentration in 5 to 10 min. At the proper rate of distillation the balls of the column will actively chatter but the chambers will not flood. When the apparent volume of liquid reaches 0.5 mL, remove the K-D apparatus and allow it to drain and cool for at least 10 min.

10.9 Remove the micro-Snyder column and rinse its lower joint into the concentrator tube with a minimum amount of hexane. Adjust the extract volume to 1.0 mL. Stopper the concentrator tube and store refrigerated if further processing will not be performed immediately. If the extract will be stored longer than two days, it should be transferred to a Teflon-sealed screw-cap vial. If the sample extract requires no further cleanup, proceed with gas chromatographic analysis (Section 12). If the sample requires further cleanup, proceed to Section 11.

10.10 Determine the original sample volume by refilling the sample bottle to the mark and transferring the liquid to a 1000-mL graduated cylinder. Record the sample volume to the nearest 5 mL.

11. Cleanup and Separation

11.1 Cleanup procedures may not be necessary for a relatively clean sample matrix. If particular circumstances demand the use of a cleanup procedure, the analyst may use the procedure below or any other appropriate procedure. However, the analyst first must demonstrate that the requirements of Section 8.2 can be met using the method as revised to incorporate the cleanup procedure.

11.2 Florisil column cleanup:

11.2.1 Prepare a slurry of 10 g of activated Florisil in methylene chloride/hexane (1 + 9)(V/V) and place the Florisil into a chromatographic column. Tap the column to settle the Florisil and add 1 cm of anhydrous sodium sulfate to the top. Adjust the elution rate to about 2 mL/min.

11.2.2 Just prior to exposure of the sodium sulfate layer to the air, quantitatively transfer the sample extract onto the column using an additional 2 mL of hexane to complete the transfer. Just prior to exposure of the sodium sulfate layer to the air, add 30 mL of methylene chloride/hexane (1 + 9)(V/V) and continue the elution of the column. Discard the eluate.

11.2.3 Next, elute the column with 30 mL of acetone/methylene chloride (1 + 9)(V/V) into a 500-mL K-D flask equipped with a 10-mL concentrator tube. Concentrate the collected fraction as in Sections 10.6, 10.7, 10.8, and 10.9 including the solvent exchange to 1 mL of hexane. This fraction should contain the nitroaromatics and isophorone. Analyze by gas chromatography (Section 12).

12. Gas Chromatography

12.1 Isophorone and nitrobenzene are analyzed by injection of a portion of the extract into an FIDGC. The dinitrotoluenes are analyzed by a separate injection into an ECDGC. Table 1 summarizes the recommended operating conditions for the gas chromatograph. Included in this table are retention times and MDL that can be achieved under these conditions. Examples of the separations achieved by Column 1 are shown in Figures 1 and 2. Other packed or capillary (open-tubular) columns, chromatographic conditions, or detectors may be used if the requirements of Section 8.2 are met.

12.2 Calibrate the system daily as described in Section 7.

12.3 If the internal standard calibration procedure is being used, the internal standard must be added to the same extract and mixed thoroughly immediately before injection into the gas chromatograph.

12.4 Inject 2 to 5 µL of the sample extract or standard into the gas chromatograph using the solvent-flush technique.[9] Smaller (1.0 µL) volumes may be injected if automatic devices are employed. Record the volume injected to the nearest 0.05 µL, the total extract volume, and the resulting peak size in area or peak height units.

12.5 Identify the parameters in the sample by comparing the retention times of the peaks in the sample chromatogram with those of the peaks in standard chromatograms. The width of the retention time window used to make identifications should be based upon measurements of actual retention time variations of standards over the course of a day. Three times the standard deviation of a retention time for a compound can be used to calculate a suggested window size; however, the experience of the analyst should weigh heavily in the interpretation of chromatograms.

12.6 If the response for a peak exceeds the working range of the system, dilute the extract and reanalyze.

12.7 If the measurement of the peak response is prevented by the presence of interferences, further cleanup is required.

13. Calculations

13.1 Determine the concentration of individual compounds in the sample.

13.1.1 If the external standard calibration procedure is used, calculate the amount of material injected from the peak response using the calibration curve or calibration factor determined in Section 7.2.2. The concentration in the sample can be calculated from Equation 2.

$$\text{Concentration } (\mu g/L) = \frac{(A)(V_t)}{(V_i)(V_s)}$$

Equation 2

where:

A = Amount of material injected (ng).

V_i = Volume of extract injected (µL).

V_t = Volume of total extract (µL).

V_s = Volume of water extracted (mL).

13.1.2 If the internal standard calibration procedure is used, calculate the concentration in the sample using the response factor (RF) determined in Section 7.3.2 and Equation 3.

$$\text{Concentration } (\mu g/L) = \frac{(A_s)(I_s)}{(A_{is})(RF)(V_o)}$$

Equation 3

where:

A_s = Response for the parameter to be measured.

A_{is} = Response for the internal standard.

I_s = Amount of internal standard added to each extract (µg).

V_o = Volume of water extracted (L).

13.2 Report results in µg/L without correction for recovery data. All QC data obtained should be reported with the sample results.

14. Method Performance

14.1 The method detection limit (MDL) is defined as the minimum concentration of a substance that can be measured and reported with 99% confidence that the value is above zero.[1] The MDL concentrations listed in Table 1 were obtained using reagent water.[10] Similar results were achieved using representative wastewaters. The MDL actually achieved in a given analysis will vary depending on instrument sensitivity and matrix effects.

14.2 This method has been tested for linearity of spike recovery from reagent water and has been demonstrated to be applicable over the concentration range from 7 × MDL to 1000 × MDL.[10]

14.3 This method was tested by 18 laboratories using reagent water, drinking water, surface water, and three industrial wastewaters spiked at six concentrations over the range 1.0 to 515 µg/L.[11] Single operator precision, overall precision, and method accuracy were found to be directly related to the concentration of the parameter and essentially independent of the sample matrix. Linear equations to describe these relationships are presented in Table 3.

REFERENCES

1. 40 CFR part 136, appendix B.

2. ''Determination of Nitroaromatic Compounds and Isophorone in Industrial and Municipal Wastewaters,'' EPA 600/ 4–82–024, National Technical Information Service, PB82–208398, Springfield, Virginia 22161, May 1982.

3. ASTM Annual Book of Standards, Part 31, D3694–78. ''Standard Practices for Preparation of Sample Containers and for Preservation of Organic Constituents,'' American Society for Testing and Materials, Philadelphia.

4. ''Carcinogens—Working With Carcinogens,'' Department of Health, Education, and Welfare, Public Health Service, Center for Disease Control, National Institute for Occupational Safety and Health, Publication No. 77–206, August 1977.

5. ''OSHA Safety and Health Standards, General Industry,'' (29 CFR part 1910), Occupational Safety and Health Administration, OSHA 2206 (Revised, January 1976).

6. ''Safety in Academic Chemistry Laboratories,'' American Chemical Society Publication, Committee on Chemical Safety, 3rd Edition, 1979.

7. Provost, L.P., and Elder, R.S. ''Interpretation of Percent Recovery Data,'' *American Laboratory*, *15*, 58–63 (1983). (The value 2.44 used in the equation in Section 8.3.3 is two times the value 1.22 derived in this report.)

8. ASTM Annual Book of Standards, Part 31, D3370–76. ''Standard Practices for Sampling Water,'' American Society for Testing and Materials, Philadelphia.

9. Burke, J.A. ''Gas Chromatography for Pesticide Residue Analysis; Some Practical Aspects,'' *Journal of the Association of Official Analytical Chemists*, *48*, 1037 (1965).

10. ''Determination of Method Detection Limit and Analytical Curve for EPA Method 609—Nitroaromatics and Isophorone,'' Special letter report for EPA Contract 68–03–2624, U.S. Environmental Protection Agency, Environmental Monitoring and Support Laboratory, Cincinnati, Ohio 45268, June 1980.

11. ''EPA Method Study 19, Method 609 (Nitroaromatics and Isophorone),'' EPA 600/4–84–018, National Technical Information Service, PB84–176908, Springfield, Virginia 22161, March 1984.

TABLE 1—CHROMATOGRAPHIC CONDITIONS AND METHOD DETECTION LIMITS

Parameter	Retention time (min)		Method detection limit (μg/L)	
	Col. 1	Col. 2	ECDGC	FIDGC
Nitrobenzene	3.31	4.31	13.7	3.6
2,6-Dinitrotoluene	3.52	4.75	0.01	–
Isophorone	4.49	5.72	15.7	5.7
2,4-Dinitrotoluene	5.35	6.54	0.02	–

Column 1 conditions: Gas-Chrom Q (80/100 mesh) coated with 1.95% QF–1/1.5% OV–17 packed in a 1.2 m long × 2 mm or 4 mm ID glass column. A 2 mm ID column and nitrogen carrier gas at 44 mL/min flow rate were used when determining isophorone and nitrobenzene by FIDGC. The column temperature was held isothermal at 85 °C. A 4 mm ID column and 10% methane/90% argon carrier gas at 44 mL/min flow rate were used when determining the dinitrotoluenes by ECDGC. The column temperature was held isothermal at 145 °C.

Column 2 conditions: Gas-Chrom Q (80/100 mesh) coated with 3% OV–101 packed in a 3.0 m long × 2 mm or 4 mm ID glass column. A 2 mm ID column and nitrogen carrier gas at 44 mL/min flow rate were used when determining isophorone and nitrobenzene by FIDGC. The column temperature was held isothermal at 100 °C. A 4 mm ID column and 10% methane/90% argon carrier gas at 44 mL/min flow rate were used when determining the dinitrotoluenes by ECDGC. The column temperature was held isothermal at 150 °C.

TABLE 2—QC ACCEPTANCE CRITERIA—METHOD 609

Parameter	Test Conc. (μg/L)	Limit for s (μg/L)	Range for $\bar{X}$ (μg/L)	Range for P, P_s (%)
2,4-Dinitrotoluene	20	5.1	3.6–22.8	6–125
2,6-Dinitrotoluene	20	4.8	3.8–23.0	8–126
Isophorone	100	32.3	8.0–100.0	D–117
Nitrobenzene	100	33.3	25.7–100.0	6–118

s = Standard deviation of four recovery measurements, in μg/L (Section 8.2.4).
$\bar{X}$ = Average recovery for four recovery measurements, in μg/L (Section 8.2.4).
P, P_s = Percent recovery measured (Section 8.3.2, Section 8.4.2).
D = Detected; result must be greater than zero.

NOTE: These criteria are based directly upon the method performance data in Table 3. Where necessary, the limits for recovery have been broadened to assure applicability of the limits to concentrations below those used to develop Table 3.

TABLE 3—METHOD ACCURACY AND PRECISION AS FUNCTIONS OF CONCENTRATION—METHOD 609

Parameter	Accuracy, as recovery, X′ (μg/L)	Single analyst precision, s_r' (μg/L)	Overall precision, S′ (μg/L)
2,4-Dinitrotoluene	0.65C + 0.22	$0.20\bar{X} + 0.08$	$0.37\bar{X} - 0.07$
2,6-Dinitrotoluene	0.66C + 0.20	$0.19\bar{X} + 0.06$	$0.36\bar{X} - 0.00$
Isophorone	0.49C + 2.93	$0.28\bar{X} + 2.77$	$0.46\bar{X} + 0.31$
Nitrobenzene	0.60C + 2.00	$0.25\bar{X} + 2.53$	$0.37\bar{X} - 0.78$

X′ = Expected recovery for one or more measurements of a sample containing a concentration of C, in μg/L.
s_r' = Expected single analyst standard deviation of measurements at an average concentration found of $\bar{X}$, in μg/L.
S′ = Expected interlaboratory standard deviation of measurements at an average concentration found of $\bar{X}$, in μg/L.
C = True value for the concentration, in μg/L.
$\bar{X}$ = Average recovery found for measurements of samples containing a concentration of C, in μg/L.

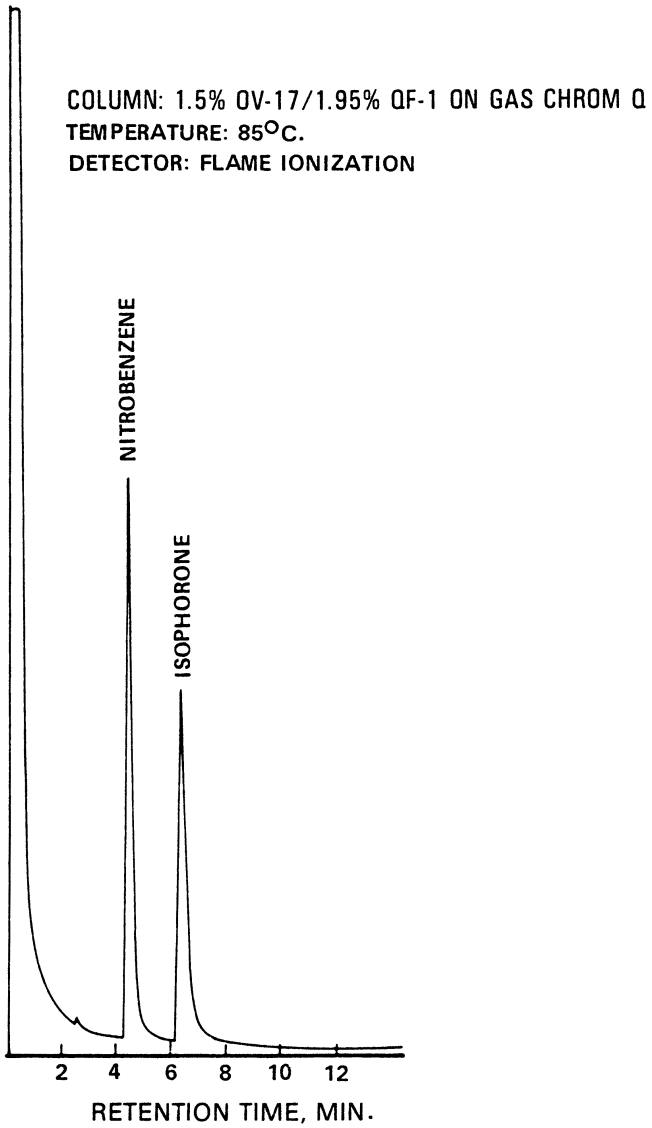

Figure 1. Gas chromatogram of nitrobenzene and isophorone.

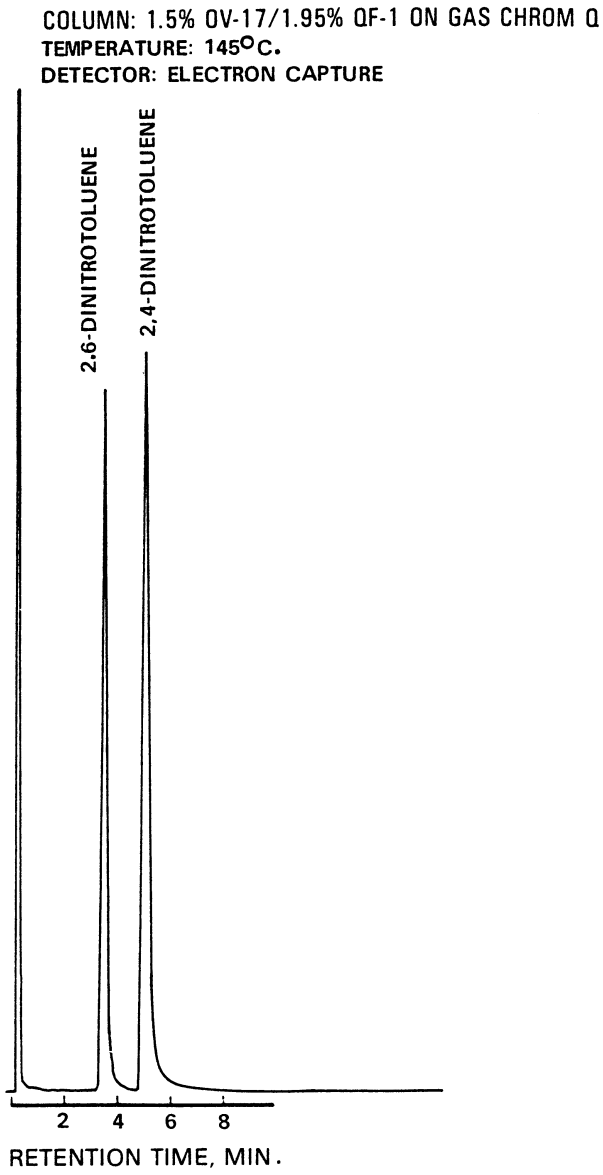

Figure 2. Gas chromatogram of dinitrotoluenes.

METHOD 610—POLYNUCLEAR AROMATIC HYDROCARBONS

1. Scope and Application

1.1 This method covers the determination of certain polynuclear aromatic hydrocarbons (PAH). The following parameters can be determined by this method:

Parameter	STORET No.	CAS No.
Acenaphthene	34205	83–32–9
Acenaphthylene	34200	208–96–8
Anthracene	34220	120–12–7
Benzo(a)anthracene	34526	56–55–3
Benzo(a)pyrene	34247	50–32–8
Benzo(b)fluoranthene	34230	205–99–2
Benzo(ghi)perylene	34521	191–24–2
Benzo(k)fluoranthene	34242	207–08–9
Chrysene	34320	218–01–9
Dibenzo(a,h)anthracene	34556	53–70–3
Fluoranthene	34376	206–44–0
Fluorene	34381	86–73–7
Indeno(1,2,3-cd)pyrene	34403	193–39–5
Naphthalene	34696	91–20–3
Phenanthrene	34461	85–01–8
Pyrene	34469	129–00–0

1.2 This is a chromatographic method applicable to the determination of the compounds listed above in municipal and industrial discharges as provided under 40 CFR 136.1. When this method is used to analyze unfamiliar samples for any or all of the compounds above, compound identifications should be supported by at least one additional qualitative technique. Method 625 provides gas chromatograph/mass spectrometer (GC/MS) conditions appropriate for the qualitative and quantitative confirmation of results for many of the parameters listed above, using the extract produced by this method.

1.3 This method provides for both high performance liquid chromatographic (HPLC) and gas chromatographic (GC) approaches for the determination of PAHs. The gas chromatographic procedure does not adequately resolve the following four pairs of compounds: Anthracene and phenanthrene; chrysene and benzo(a)anthracene; benzo(b)fluoranthene and benzo(k)fluoranthene; and dibenzo(a,h) anthracene and indeno (1,2,3-cd)pyrene. Unless the purpose for the analysis can be served by reporting the sum of an unresolved pair, the liquid chromatographic approach must be used for these compounds. The liquid chromatographic method does resolve all 16 of the PAHs listed.

1.4 The method detection limit (MDL, defined in Section 15.1)[1] for each parameter is listed in Table 1. The MDL for a specific wastewater may differ from those listed, depending upon the nature of interferences in the sample matrix.

1.5 The sample extraction and concentration steps in this method are essentially the same as in Methods 606, 608, 609, 611, and 612. Thus, a single sample may be extracted to measure the parameters included in the scope of each of these methods. When cleanup is required, the concentration levels must be high enough to permit selecting aliquots, as necessary, to apply appropriate cleanup procedures. Selection of the aliquots must be made prior to the solvent exchange steps of this method. The analyst is allowed the latitude, under Sections 12 and 13, to select chromatographic conditions appropriate for the simultaneous measurement of combinations of these parameters.

1.6 Any modification of this method, beyond those expressly permitted, shall be considered as a major modification subject to application and approval of alternate test procedures under 40 CFR 136.4 and 136.5.

1.7 This method is restricted to use by or under the supervision of analysts experienced in the use of HPLC and GC systems and in the interpretation of liquid and gas chromatograms. Each analyst must demonstrate the ability to generate acceptable results with this method using the procedure described in Section 8.2.

2. Summary of Method

2.1 A measured volume of sample, approximately 1–L, is extracted with methylene chloride using a separatory funnel. The methylene chloride extract is dried and concentrated to a volume of 10 mL or less. The extract is then separated by HPLC or GC. Ultraviolet (UV) and fluorescence detectors are used with HPLC to identify and measure the PAHs. A flame ionization detector is used with GC.[2]

2.2 The method provides a silica gel column cleanup procedure to aid in the elimination of interferences that may be encountered.

3. Interferences

3.1 Method interferences may be caused by contaminants in solvents, reagents, glassware, and other sample processing hardward that lead to discrete artifacts and/or elevated baselines in the chromatograms. All of these materials must be routinely demonstrated to be free from interferences under the conditions of the analysis by running laboratory reagent blanks as described in Section 8.1.3.

3.1.1 Glassware must be scrupulously cleaned.[3] Clean all glassware as soon as possible after use by rinsing with the last solvent used in it. Solvent rinsing should be followed by detergent washing with hot water, and rinses with tap water and distilled water. The glassware should then be drained dry, and heated in a muffle furnace at 400 °C for 15 to 30 min. Some thermally stable materials, such as PCBs, may not be eliminated by this treatment. Solvent rinses with acetone and pesticide quality hexane may be

substituted for the muffle furnace heating. Thorough rinsing with such solvents usually eliminates PCB interference. Volumetric ware should not be heated in a muffle furnace. After drying and cooling, glassware should be sealed and stored in a clean environment to prevent any accumulation of dust or other contaminants. Store inverted or capped with aluminum foil.

3.1.2 The use of high purity reagents and solvents helps to minimize interference problems. Purification of solvents by distillation in all-glass systems may be required.

3.2 Matrix interferences may be caused by contaminants that are co-extracted from the sample. The extent of matrix interferences will vary considerably from source to source, depending upon the nature and diversity of the industrial complex or municipality being sampled. The cleanup procedure in Section 11 can be used to overcome many of these interferences, but unique samples may require additional cleanup approaches to achieve the MDL listed in Table 1.

3.3 The extent of interferences that may be encountered using liquid chromatographic techniques has not been fully assessed. Although the HPLC conditions described allow for a unique resolution of the specific PAH compounds covered by this method, other PAH compounds may interfere.

4. Safety

4.1 The toxicity or carcinogenicity of each reagent used in this method have not been precisely defined; however, each chemical compound should be treated as a potential health hazard. From this viewpoint, exposure to these chemicals must be reduced to the lowest possible level by whatever means available. The laboratory is responsible for maintaining a current awareness file of OSHA regulations regarding the safe handling of the chemicals specified in this method. A reference file of material data handling sheets should also be made available to all personnel involved in the chemical analysis. Additional references to laboratory safety are available and have been identified[4M6] for the information of the analyst.

4.2 The following parameters covered by this method have been tentatively classified as known or suspected, human or mammalian carcinogens: benzo(a)anthracene, benzo(a)pyrene, and dibenzo(a,h)-anthracene. Primary standards of these toxic compounds should be prepared in a hood. A NIOSH/MESA approved toxic gas respirator should be worn when the analyst handles high concentrations of these toxic compounds.

5. Apparatus and Materials

5.1 Sampling equipment, for discrete or composite sampling.

5.1.1 Grab sample bottle—1–L or 1-qt, amber glass, fitted with a screw cap lined with Teflon. Foil may be substituted for Teflon if the sample is not corrosive. If amber bottles are not available, protect samples from light. The bottle and cap liner must be washed, rinsed with acetone or methylene chloride, and dried before use to minimize contamination.

5.1.2 Automatic sampler (optional)—The sampler must incorporate glass sample containers for the collection of a minimum of 250 mL of sample. Sample containers must be kept refrigerated at 4 °C and protected from light during compositing. If the sampler uses a peristaltic pump, a minimum length of compressible silicone rubber tubing may be used. Before use, however, the compressible tubing should be thoroughly rinsed with methanol, followed by repeated rinsings with distilled water to minimize the potential for contamination of the sample. An integrating flow meter is required to collect flow proportional composites.

5.2 Glassware (All specifications are suggested. Catalog numbers are included for illustration only.):

5.2.1 Separatory funnel—2–L, with Teflon stopcock.

5.2.2 Drying column—Chromatographic column, approximately 400 mm long × 19 mm ID, with coarse frit filter disc.

5.2.3 Concentrator tube, Kuderna-Danish—10-mL, graduated (Kontes K–570050–1025 or equivalent). Calibration must be checked at the volumes employed in the test. Ground glass stopper is used to prevent evaporation of extracts.

5.2.4 Evaporative flask, Kuderna-Danish—500-mL (Kontes K–570001–0500 or equivalent). Attach to concentrator tube with springs.

5.2.5 Snyder column, Kuderna-Danish—Three-ball macro (Kontes K–503000–0121 or equivalent).

5.2.6 Snyder column, Kuderna-Danish—Two-ball micro (Kontes K–569001–0219 or equivalent).

5.2.7 Vials—10 to 15-mL, amber glass, with Teflon-lined screw cap.

5.2.8 Chromatographic column—250 mm long × 10 mm ID, with coarse frit filter disc at bottom and Teflon stopcock.

5.3 Boiling chips—Approximately 10/40 mesh. Heat to 400 °C for 30 min or Soxhlet extract with methylene chloride.

5.4 Water bath—Heated, with concentric ring cover, capable of temperature control (±2 °C). The bath should be used in a hood.

5.5 Balance—Analytical, capable of accurately weighing 0.0001 g.

5.6 High performance liquid chromatograph (HPLC)—An analytical system complete with column supplies, high pressure syringes, detectors, and compatible strip-chart recorder. A data system is recommended for measuring peak areas and retention times.

5.6.1 Gradient pumping system—Constant flow.

5.6.2 Reverse phase column—HC-ODS Sil-X, 5 micron particle diameter, in a 25 cm × 2.6 mm ID stainless steel column (Perkin Elmer No. 089–0716 or equivalent). This column was used to develop the method performance statements in Section 15. Guidelines for the use of alternate column packings are provided in Section 12.2.

5.6.3 Detectors—Fluorescence and/or UV detectors. The fluorescence detector is used for excitation at 280 nm and emission greater than 389 nm cutoff (Corning 3–75 or equivalent). Fluorometers should have dispersive optics for excitation and can utilize either filter or dispersive optics at the emission detector. The UV detector is used at 254 nm and should be coupled to the fluorescence detector. These detectors were used to develop the method performance statements in Section 15. Guidelines for the use of alternate detectors are provided in Section 12.2.

5.7 Gas chromatograph—An analytical system complete with temperature programmable gas chromatograph suitable for on-column or splitless injection and all required accessories including syringes, analytical columns, gases, detector, and strip-chart recorder. A data system is recommended for measuring peak areas.

5.7.1 Column—1.8 m long × 2 mm ID glass, packed with 3% OV–17 on Chromosorb W-AW-DCMS (100/120 mesh) or equivalent. This column was used to develop the retention time data in Table 2. Guidelines for the use of alternate column packings are provided in Section 13.3.

5.7.2 Detector—Flame ionization detector. This detector has proven effective in the analysis of wastewaters for the parameters listed in the scope (Section 1.1), excluding the four pairs of unresolved compounds listed in Section 1.3. Guidelines for the use of alternate detectors are provided in Section 13.3.

6. Reagents

6.1 Reagent water—Reagent water is defined as a water in which an interferent is not observed at the MDL of the parameters of interest.

6.2 Sodium thiosulfate—(ACS) Granular.

6.3 Cyclohexane, methanol, acetone, methylene chloride, pentane—Pesticide quality or equivalent.

6.4 Acetonitrile—HPLC quality, distilled in glass.

6.5 Sodium sulfate—(ACS) Granular, anhydrous. Purify by heating at 400 °C for 4 h in a shallow tray.

6.6 Silica gel—100/200 mesh, desiccant, Davison, grade-923 or equivalent. Before use, activate for at least 16 h at 130 °C in a shallow glass tray, loosely covered with foil.

6.7 Stock standard solutions (1.00 μg/μL)—Stock standard solutions can be prepared from pure standard materials or purchased as certified solutions.

6.7.1 Prepare stock standard solutions by accurately weighing about 0.0100 g of pure material. Dissolve the material in acetonitrile and dilute to volume in a 10-mL volumetric flask. Larger volumes can be used at the convenience of the analyst. When compound purity is assayed to be 96% or greater, the weight can be used without correction to calculate the concentration of the stock standard. Commercially prepared stock standards can be used at any concentration if they are certified by the manufacturer or by an independent source.

6.7.2 Transfer the stock standard solutions into Teflon-sealed screw-cap bottles. Store at 4 °C and protect from light. Stock standard solutions should be checked frequently for signs of degradation or evaporation, especially just prior to preparing calibration standards from them.

6.7.3 Stock standard solutions must be replaced after six months, or sooner if comparison with check standards indicates a problem.

6.8 Quality control check sample concentrate—See Section 8.2.1.

7. Calibration

7.1 Establish liquid or gas chromatographic operating conditions equivalent to those given in Table 1 or 2. The chromatographic system can be calibrated using the external standard technique (Section 7.2) or the internal standard technique (Section 7.3).

7.2 External standard calibration procedure:

7.2.1 Prepare calibration standards at a minimum of three concentration levels for each parameter of interest by adding volumes of one or more stock standards to a volumetric flask and diluting to volume with acetonitrile. One of the external standards should be at a concentration near, but above, the MDL (Table 1) and the other concentrations should correspond to the expected range of concentrations found in real samples or should define the working range of the detector.

7.2.2 Using injections of 5 to 25 μL for HPLC and 2 to 5 μL for GC, analyze each calibration standard according to Section 12 or 13, as appropriate. Tabulate peak height or area responses against the mass injected. The results can be used to prepare a calibration curve for each compound. Alternatively, if the ratio of response to amount injected (calibration factor) is a constant over the working range (<10% relative standard deviation, RSD), linearity through the origin can be assumed and the average ratio or calibration factor can be used in place of a calibration curve.

7.3 Internal standard calibration procedure—To use this approach, the analyst must select one or more internal standards that are similar in analytical behavior to the

compounds of interest. The analyst must further demonstrate that the measurement of the internal standard is not affected by method or matrix interferences. Because of these limitations, no internal standard can be suggested that is applicable to all samples.

7.3.1 Prepare calibration standards at a minimum of three concentration levels for each parameter of interest by adding volumes of one or more stock standards to a volumetric flask. To each calibration standard, add a known constant amount of one or more internal standards, and dilute to volume with acetonitrile. One of the standards should be at a concentration near, but above, the MDL and the other concentrations should correspond to the expected range of concentrations found in real samples or should define the working range of the detector.

7.3.2 Using injections of 5 to 25 µL for HPLC and 2 to 5 µL for GC, analyze each calibration standard according to Section 12 or 13, as appropriate. Tabulate peak height or area responses against concentration for each compound and internal standard. Calculate response factors (RF) for each compound using Equation 1.

$$RF = \frac{(A_s)(C_{is})}{(A_{is})(C_s)}$$

Equation 1

where:

A_s = Response for the parameter to be measured.

A_{is} = Response for the internal standard.

C_{is} = Concentration of the internal standard (µg/L).

C_s = Concentration of the parameter to be measured (µg/L).

If the RF value over the working range is a constant (<10% RSD), the RF can be assumed to be invariant and the average RF can be used for calculations. Alternatively, the results can be used to plot a calibration curve of response ratios, A_s/A_{is}, vs. RF.

7.4 The working calibration curve, calibration factor, or RF must be verified on each working day by the measurement of one or more calibration standards. If the response for any parameter varies from the predicted response by more than ±15%, the test must be repeated using a fresh calibration standard. Alternatively, a new calibration curve must be prepared for that compound.

7.5 Before using any cleanup procedure, the analyst must process a series of calibration standards through the procedure to validate elution patterns and the absence of interferences from the reagents.

8. Quality Control

8.1 Each laboratory that uses this method is required to operate a formal quality control program. The minimum requirements of this program consist of an initial demonstration of laboratory capability and an ongoing analysis of spiked samples to evaluate and document data quality. The laboratory must maintain records to document the quality of data that is generated. Ongoing data quality checks are compared with established performance criteria to determine if the results of analyses meet the performance characteristics of the method. When results of sample spikes indicate atypical method performance, a quality control check standard must be analyzed to confirm that the measurements were performed in an in-control mode of operation.

8.1.1 The analyst must make an initial, one-time, demonstration of the ability to generate acceptable accuracy and precision with this method. This ability is established as described in Section 8.2.

8.1.2 In recognition of advances that are occurring in chromatography, the analyst is permitted certain options (detailed in Sections 10.4, 11.1, 12.2, and 13.3) to improve the separations or lower the cost of measurements. Each time such a modification is made to the method, the analyst is required to repeat the procedure in Section 8.2.

8.1.3 Before processing any samples the analyst must analyze a reagent water blank to demonstrate that interferences from the analytical system and glassware are under control. Each time a set of samples is extracted or reagents are changed a reagent water blank must be processed as a safeguard against laboratory contamination.

8.1.4 The laboratory must, on an ongoing basis, spike and analyze a minimum of 10% of all samples to monitor and evaluate laboratory data quality. This procedure is described in Section 8.3.

8.1.5 The laboratory must, on an ongoing basis, demonstrate through the analyses of quality control check standards that the operation of the measurement system is in control. This procedure is described in Section 8.4. The frequency of the check standard analyses is equivalent to 10% of all samples analyzed but may be reduced if spike recoveries from samples (Section 8.3) meet all specified quality control criteria.

8.1.6 The laboratory must maintain performance records to document the quality of data that is generated. This procedure is described in Section 8.5.

8.2 To establish the ability to generate acceptable accuracy and precision, the analyst must perform the following operations.

8.2.1 A quality control (QC) check sample concentrate is required containing each parameter of interest at the following concentrations in acetonitrile: 100 µg/mL of any

of the six early-eluting PAHs (naphthalene, acenaphthylene, acenaphthene, fluorene, phenanthrene, and anthracene); 5 µg/mL of benzo(k)fluoranthene; and 10 µg/mL of any of the other PAHs. The QC check sample concentrate must be obtained from the U.S. Environmental Protection Agency, Environmental Monitoring and Support Laboratory in Cincinnati, Ohio, if available. If not available from that source, the QC check sample concentrate must be obtained from another external source. If not available from either source above, the QC check sample concentrate must be prepared by the laboratory using stock standards prepared independently from those used for calibration.

8.2.2 Using a pipet, prepare QC check samples at the test concentrations shown in Table 3 by adding 1.00 mL of QC check sample concentrate to each of four 1–L aliquots of reagent water.

8.2.3 Analyze the well-mixed QC check samples according to the method beginning in Section 10.

8.2.4 Calculate the average recovery ($\bar{X}$) in µg/L, and the standard deviation of the recovery (s) in µg/L, for each parameter using the four results.

8.2.5 For each parameter compare s and $\bar{X}$ with the corresponding acceptance criteria for precision and accuracy, respectively, found in Table 3. If s and $\bar{X}$ for all parameters of interest meet the acceptance criteria, the system performance is acceptable and analysis of actual samples can begin. If any individual s exceeds the precision limit or any individual $\bar{X}$ falls outside the range for accuracy, the system performance is unacceptable for that parameter.

NOTE: The large number of parameters in Table 3 present a substantial probability that one or more will fail at least one of the acceptance criteria when all parameters are analyzed.

8.2.6 When one or more of the parameters tested fail at least one of the acceptance criteria, the analyst must proceed according to Section 8.2.6.1 or 8.2.6.2.

8.2.6.1 Locate and correct the source of the problem and repeat the test for all parameters of interest beginning with Section 8.2.2.

8.2.6.2 Beginning with Section 8.2.2, repeat the test only for those parameters that failed to meet criteria. Repeated failure, however, will confirm a general problem with the measurement system. If this occurs, locate and correct the source of the problem and repeat the test for all compounds of interest beginning with Section 8.2.2.

8.3 The laboratory must, on an ongoing basis, spike at least 10% of the samples from each sample site being monitored to assess accuracy. For laboratories analyzing one to ten samples per month, at least one spiked sample per month is required.

8.3.1 The concentration of the spike in the sample should be determined as follows:

8.3.1.1 If, as in compliance monitoring, the concentration of a specific parameter in the sample is being checked against a regulatory concentration limit, the spike should be at that limit or 1 to 5 times higher than the background concentration determined in Section 8.3.2, whichever concentration would be larger.

8.3.1.2 If the concentration of a specific parameter in the sample is not being checked against a limit specific to that parameter, the spike should be at the test concentration in Section 8.2.2 or 1 to 5 times higher than the background concentration determined in Section 8.3.2, whichever concentration would be larger.

8.3.1.3 If it is impractical to determine background levels before spiking (e.g., maximum holding times will be exceeded), the spike concentration should be (1) the regulatory concentration limit, if any; or, if none, (2) the larger of either 5 times higher than the expected background concentration or the test concentration in Section 8.2.2.

8.3.2 Analyze one sample aliquot to determine the background concentration (B) of each parameter. If necessary, prepare a new QC check sample concentrate (Section 8.2.1) appropriate for the background concentrations in the sample. Spike a second sample aliquot with 1.0 mL of the QC check sample concentrate and analyze it to determine the concentration after spiking (A) of each parameter. Calculate each percent recovery (P) as 100 (A − B)%/T, where T is the known true value of the spike.

8.3.3 Compare the percent recovery (P) for each parameter with the corresponding QC acceptance criteria found in Table 3. These acceptance criteria were calculated to include an allowance for error in measurement of both the background and spike concentrations, assuming a spike to background ratio of 5:1. This error will be accounted for to the extent that the analyst's spike to background ratio approaches 5:1.[7] If spiking was performed at a concentration lower than the test concentration in Section 8.2.2, the analyst must use either the QC acceptance criteria in Table 3, or optional QC acceptance criteria calculated for the specific spike concentration. To calculate optional acceptance criteria for the recovery of a parameter: (1) Calculate accuracy (X′) using the equation in Table 4, substituting the spike concentration (T) for C; (2) calculate overall precision (S′) using the equation in Table 4, substituting X′ for $\bar{X}$; (3) calculate the range for recovery at the spike concentration as (100 X′/T)±2.44(100 S′/T)%.[7]

8.3.4 If any individual P falls outside the designated range for recovery, that parameter has failed the acceptance criteria. A check standard containing each parameter

that failed the critiera must be analyzed as described in Section 8.4.

8.4 If any parameter fails the acceptance criteria for recovery in Section 8.3, a QC check standard containing each parameter that failed must be prepared and analyzed.

NOTE: The frequency for the required analysis of a QC check standard will depend upon the number of parameters being simultaneously tested, the complexity of the sample matrix, and the performance of the laboratory. If the entire list of parameters in Table 3 must be measured in the sample in Section 8.3, the probability that the analysis of a QC check standard will be required is high. In this case the QC check standard should be routinely analyzed with the spike sample.

8.4.1 Prepare the QC check standard by adding 1.0 mL of QC check sample concentrate (Section 8.2.1 or 8.3.2) to 1 L of reagent water. The QC check standard needs only to contain the parameters that failed criteria in the test in Section 8.3.

8.4.2 Analyze the QC check standard to determine the concentration measured (A) of each parameter. Calculate each percent recovery (P_s) as 100 (A/T)%, where T is the true value of the standard concentration.

8.4.3 Compare the percent recovery (P_s) for each parameter with the corresponding QC acceptance criteria found in Table 3. Only parameters that failed the test in Section 8.3 need to be compared with these criteria. If the recovery of any such parameter falls outside the designated range, the laboratory performance for that parameter is judged to be out of control, and the problem must be immediately identified and corrected. The analytical result for that parameter in the unspiked sample is suspect and may not be reported for regulatory compliance purposes.

8.5 As part of the QC program for the laboratory, method accuracy for wastewater samples must be assessed and records must be maintained. After the analysis of five spiked wastewater samples as in Section 8.3, calculate the average percent recovery ($\bar{P}$) and the standard deviation of the percent recovery (s_p). Express the accuracy assessment as a percent recovery interval from $\bar{P}-2s_p$ to $\bar{P} + 2s_p$. If $\bar{P}$ = 90% and s_p = 10%, for example, the accuracy interval is expressed as 70–110%. Update the accuracy assessment for each parameter on a regular basis (e.g. after each five to ten new accuracy measurements).

8.6 It is recommended that the laboratory adopt additional quality assurance practices for use with this method. The specific practices that are most productive depend upon the needs of the laboratory and the nature of the samples. Field duplicates may be analyzed to assess the precision of the environmental measurements. When doubt exists over the identification of a peak on the chromatogram, confirmatory techniques such as gas chromatography with a dissimilar column, specific element detector, or mass spectrometer must be used. Whenever possible, the laboratory should analyze standard reference materials and participate in relevant performance evaluation studies.

9. Sample Collection, Preservation, and Handling

9.1 Grab samples must be collected in glass containers. Conventional sampling practices[8] should be followed, except that the bottle must not be prerinsed with sample before collection. Composite samples should be collected in refrigerated glass containers in accordance with the requirements of the program. Automatic sampling equipment must be as free as possible of Tygon tubing and other potential sources of contamination.

9.2 All samples must be iced or refrigerated at 4 °C from the time of collection until extraction. PAHs are known to be light sensitive; therefore, samples, extracts, and standards should be stored in amber or foil-wrapped bottles in order to minimize photolytic decomposition. Fill the sample bottles and, if residual chlorine is present, add 80 mg of sodium thiosulfate per liter of sample and mix well. EPA Methods 330.4 and 330.5 may be used for measurement of residual chlorine.[9] Field test kits are available for this purpose.

9.3 All samples must be extracted within 7 days of collection and completely analyzed within 40 days of extraction.[2]

10. Sample Extraction

10.1 Mark the water meniscus on the side of the sample bottle for later determination of sample volume. Pour the entire sample into a 2–L separatory funnel.

10.2 Add 60 mL of methylene chloride to the sample bottle, seal, and shake 30 s to rinse the inner surface. Transfer the solvent to the separatory funnel and extract the sample by shaking the funnel for 2 min. with periodic venting to release excess pressure. Allow the organic layer to separate from the water phase for a minimum of 10 min. If the emulsion interface between layers is more than one-third the volume of the solvent layer, the analyst must employ mechanical techniques to complete the phase separation. The optimum technique depends upon the sample, but may include stirring, filtration of the emulsion through glass wool, centrifugation, or other physical methods. Collect the methylene chloride extract in a 250–mL Erlenmeyer flask.

10.3 Add a second 60-mL volume of methylene chloride to the sample bottle and repeat the extraction procedure a second time, combining the extracts in the Erlenmeyer flask. Perform a third extraction in the same manner.

10.4 Assemble a Kuderna-Danish (K-D) concentrator by attaching a 10-mL concentrator tube to a 500-mL evaporative flask. Other concentration devices or techniques may be used in place of the K-D concentrator if the requirements of Section 8.2 are met.

10.5 Pour the combined extract through a solvent-rinsed drying column containing about 10 cm of anhydrous sodium sulfate, and collect the extract in the K-D concentrator. Rinse the Erlenmeyer flask and column with 20 to 30 mL of methylene chloride to complete the quantitative transfer.

10.6 Add one or two clean boiling chips to the evaporative flask and attach a three-ball Snyder column. Prewet the Snyder column by adding about 1 mL of methylene chloride to the top. Place the K-D apparatus on a hot water bath (60 to 65 °C) so that the concentrator tube is partially immersed in the hot water, and the entire lower rounded surface of the flask is bathed with hot vapor. Adjust the vertical position of the apparatus and the water temperature as required to complete the concentration in 15 to 20 min. At the proper rate of distillation the balls of the column will actively chatter but the chambers will not flood with condensed solvent. When the apparent volume of liquid reaches 1 mL, remove the K-D apparatus and allow it to drain and cool for at least 10 min.

10.7 Remove the Snyder column and rinse the flask and its lower joint into the concentrator tube with 1 to 2 mL of methylene chloride. A 5-mL syringe is recommended for this operation. Stopper the concentrator tube and store refrigerated if further processing will not be performed immediately. If the extract will be stored longer than two days, it should be transferred to a Teflon-sealed screw-cap vial and protected from light. If the sample extract requires no further cleanup, proceed with gas or liquid chromatographic analysis (Section 12 or 13). If the sample requires further cleanup, proceed to Section 11.

10.8 Determine the original sample volume by refilling the sample bottle to the mark and transferring the liquid to a 1000-mL graduated cylinder. Record the sample volume to the nearest 5 mL.

11. Cleanup and Separation

11.1 Cleanup procedures may not be necessary for a relatively clean sample matrix. If particular circumstances demand the use of a cleanup procedure, the analyst may use the procedure below or any other appropriate procedure. However, the analyst first must demonstrate that the requirements of Section 8.2 can be met using the methods as revised to incorporate the cleanup procedure.

11.2 Before the silica gel cleanup technique can be utilized, the extract solvent must be exchanged to cyclohexane. Add 1 to 10 mL of the sample extract (in methylene chloride) and a boiling chip to a clean K-D concentrator tube. Add 4 mL of cyclohexane and attach a two-ball micro-Snyder column. Prewet the column by adding 0.5 mL of methylene chloride to the top. Place the micro-K-D apparatus on a boiling (100 °C) water bath so that the concentrator tube is partially immersed in the hot water. Adjust the vertical position of the apparatus and the water temperature as required to complete concentration in 5 to 10 min. At the proper rate of distillation the balls of the column will actively chatter but the chambers will not flood. When the apparent volume of the liquid reaches 0.5 mL, remove the K-D apparatus and allow it to drain and cool for at least 10 min. Remove the micro-Snyder column and rinse its lower joint into the concentrator tube with a minimum amount of cyclohexane. Adjust the extract volume to about 2 mL.

11.3 Silica gel column cleanup for PAHs:

11.3.1 Prepare a slurry of 10 g of activiated silica gel in methylene chloride and place this into a 10-mm ID chromatographic column. Tap the column to settle the silica gel and elute the methylene chloride. Add 1 to 2 cm of anhydrous sodium sulfate to the top of the silica gel.

11.3.2 Preelute the column with 40 mL of pentane. The rate for all elutions should be about 2 mL/min. Discard the eluate and just prior to exposure of the sodium sulfate layer to the air, transfer the 2-mL cyclohexane sample extract onto the column using an additional 2 mL cyclohexane to complete the transfer. Just prior to exposure of the sodium sulfate layer to the air, add 25 mL of pentane and continue the elution of the column. Discard this pentane eluate.

11.3.3 Next, elute the column with 25 mL of methylene chloride/pentane (4 + 6)(V/V) into a 500-mL K-D flask equipped with a 10-mL concentrator tube. Concentrate the collected fraction to less than 10 mL as in Section 10.6. When the apparatus is cool, remove the Snyder column and rinse the flask and its lower joint with pentane. Proceed with HPLC or GC analysis.

12. High Performance Liquid Chromatography

12.1 To the extract in the concentrator tube, add 4 mL of acetonitrile and a new boiling chip, then attach a two-ball micro-Snyder column. Concentrate the solvent as in Section 10.6, except set the water bath at 95 to 100 °C. When the apparatus is cool, remove the micro-Snyder column and rinse its lower joint into the concentrator tube with about 0.2 mL of acetonitrile. Adjust the extract volume to 1.0 mL.

12.2 Table 1 summarizes the recommended operating conditions for the HPLC. Included in this table are retention times, capacity factors, and MDL that can be achieved under these conditions. The UV detector is recommended for the determination of naphthalene, acenaphthylene, acenapthene, and

fluorene and the fluorescence detector is recommended for the remaining PAHs. Examples of the separations achieved by this HPLC column are shown in Figures 1 and 2. Other HPLC columns, chromatographic conditions, or detectors may be used if the requirements of Section 8.2 are met.

12.3 Calibrate the system daily as described in Section 7.

12.4 If the internal standard calibration procedure is being used, the internal standard must be added to the sample extract and mixed thoroughly immediately before injection into the instrument.

12.5 Inject 5 to 25 µL of the sample extract or standard into the HPLC using a high pressure syringe or a constant volume sample injection loop. Record the volume injected to the nearest 0.1 µL, and the resulting peak size in area or peak height units. Re-equilibrate the HPLC column at the initial gradient conditions for at least 10 min between injections.

12.6 Identify the parameters in the sample by comparing the retention time of the peaks in the sample chromatogram with those of the peaks in standard chromatograms. The width of the retention time window used to make identifications should be based upon measurements of actual retention time variations of standards over the course of a day. Three times the standard deviation of a retention time for a compound can be used to calculate a suggested window size; however, the experience of the analyst should weigh heavily in the interpretation of chromatograms.

12.7 If the response for a peak exceeds the working range of the system, dilute the extract with acetonitrile and reanalyze.

12.8 If the measurement of the peak response is prevented by the presence of interferences, further cleanup is required.

13. Gas Chromatography

13.1 The packed column GC procedure will not resolve certain isomeric pairs as indicated in Section 1.3 and Table 2. The liquid chromatographic procedure (Section 12) must be used for these parameters.

13.2 To achieve maximum sensitivity with this method, the extract must be concentrated to 1.0 mL. Add a clean boiling chip to the methylene chloride extract in the concentrator tube. Attach a two-ball micro-Snyder column. Prewet the micro-Snyder column by adding about 0.5 mL of methylene chloride to the top. Place the micro-K-D apparatus on a hot water bath (60 to 65 °C) so that the concentrator tube is partially immersed in the hot water. Adjust the vertical position of the apparatus and the water temperature as required to complete the concentration in 5 to 10 min. At the proper rate of distillation the balls will actively chatter but the chambers will not flood. When the apparent volume of liquid reaches 0.5 mL, remove the K-D apparatus and allow it to drain and cool for at least 10 min. Remove the micro-Snyder column and rinse its lower joint into the concentrator tube with a minimum amount of methylene chloride. Adjust the final volume to 1.0 mL and stopper the concentrator tube.

13.3 Table 2 summarizes the recommended operating conditions for the gas chromatograph. Included in this table are retention times that were obtained under these conditions. An example of the separations achieved by this column is shown in Figure 3. Other packed or capillary (open-tubular) columns, chromatographic conditions, or detectors may be used if the requirements of Section 8.2 are met.

13.4 Calibrate the gas chromatographic system daily as described in Section 7.

13.5 If the internal standard calibration procedure is being used, the internal standard must be added to the sample extract and mixed thoroughly immediately before injection into the gas chromatograph.

13.6 Inject 2 to 5 µL of the sample extract or standard into the gas chromatograph using the solvent-flush technique.[10] Smaller (1.0 µL) volumes may be injected if automatic devices are employed. Record the volume injected to the nearest 0.05 µL, and the resulting peak size in area or peak height units.

13.7 Identify the parameters in the sample by comparing the retention times of the peaks in the sample chromatogram with those of the peaks in standard chromatograms. The width of the retention time window used to make identifications should be based upon measurements of actual retention time variations of standards over the course of a day. Three times the standard deviation of a retention time for a compound can be used to calculate a suggested window size; however, the experience of the analyst should weigh heavily in the interpretation of chromatograms.

13.8 If the response for a peak exceeds the working range of the system, dilute the extract and reanalyze.

13.9 If the measurement of the peak response is prevented by the presence of interferences, further cleanup is required.

14. Calculations

14.1 Determine the concentration of individual compounds in the sample.

14.1.1 If the external standard calibration procedure is used, calculate the amount of material injected from the peak response using the calibration curve or calibration factor determined in Section 7.2.2. The concentration in the sample can be calculated from Equation 2.

$$\text{Concentration } (\mu g/L) = \frac{(A)(V_t)}{(V_i)(V_s)}$$

Equation 2

where:
A = Amount of material injected (ng).
V_i = Volume of extract injected (μL).
V_t = Volume of total extract (μL).
V_s = Volume of water extracted (mL).

13.1.2 If the internal standard calibration procedure is used, calculate the concentration in the sample using the response factor (RF) determined in Section 7.3.2 and Equation 3.

$$\text{Concentration } (\mu g/L) = \frac{(A_s)(I_s)}{(A_{is})(RF)(V_o)}$$

Equation 3

where:
A_s = Response for the parameter to be measured.
A_{is} = Response for the internal standard.
I_s = Amount of internal standard added to each extract (μg).
V_o = Volume of water extracted (L).

14.2 Report results in μg/L without correction for recovery data. All QC data obtained should be reported with the sample results.

15. Method Performance

15.1 The method detection limit (MDL) is defined as the minimum concentration of a substance that can be measured and reported with 99% confidence that the value is above zero.[1] The MDL concentrations listed in Table 1 were obtained using reagent water.[11] Similar results were achieved using representative wastewaters. MDL for the GC approach were not determined. The MDL actually achieved in a given analysis will vary depending on instrument sensitivity and matrix effects.

15.2 This method has been tested for linearity of spike recovery from reagent water and has been demonstrated to be applicable over the concentration range from 8 × MDL to 800 × MDL[11] with the following exception: benzo(ghi)perylene recovery at 80 × and 800 × MDL were low (35% and 45%, respectively).

15.3 This method was tested by 16 laboratories using reagent water, drinking water, surface water, and three industrial wastewaters spiked at six concentrations over the range 0.1 to 425 μg/L.[12] Single operator precision, overall precision, and method accuracy were found to be directly related to the concentration of the parameter and essentially independent of the sample matrix. Linear equations to describe these relationships are presented in Table 4.

REFERENCES

1. 40 CFR part 136, appendix B.

2. ''Determination of Polynuclear Aromatic Hydrocarbons in Industrial and Municipal Wastewaters,'' EPA 600/4–82–025, National Technical Information Service, PB82–258799, Springfield, Virginia 22161, June 1982.

3. ASTM Annual Book of Standards, Part 31, D3694–78. ''Standard Practices for Preparation of Sample Containers and for Preservation of Organic Constituents,'' American Society for Testing and Materials, Philadelphia.

4. ''Carcinogens—Working With Carcinogens,'' Department of Health, Education, and Welfare, Public Health Service, Center for Disease Control, National Institute for Occupational Safety and Health, Publication No. 77–206, August 1977.

5. ''OSHA Safety and Health Standards, General Industry,'' (29 CFR part 1910), Occupational Safety and Health Administration, OSHA 2206 (Revised, January 1976).

6. ''Safety in Academic Chemistry Laboratories,'' American Chemical Society Publication, Committee on Chemical Safety, 3rd Edition, 1979.

7. Provost, L.P., and Elder, R.S. ''Interpretation of Percent Recovery Data,'' *American Laboratory*, *15*, 58–63 (1983). (The value 2.44 used in the equation in Section 8.3.3 is two times the value 1.22 derived in this report.)

8. ASTM Annual Book of Standards, Part 31, D3370–76. ''Standard Practices for Sampling Water,'' American Society for Testing and Materials, Philadelphia.

9. ''Methods 330.4 (Titrimetric, DPD-FAS) and 330.5 (Spectrophotometric, DPD) for Chlorine, Total Residual,'' Methods for Chemical Analysis of Water and Wastes, EPA–600/4–79–020, U.S. Environmental Protection Agency, Environmental Monitoring and Support Laboratory, Cincinnati, Ohio 45268, March 1979.

10. Burke, J.A. ''Gas Chromatography for Pesticide Residue Analysis; Some Practical Aspects,'' *Journal of the Association of Official Analytical Chemists*, *48*, 1037 (1965).

11. Cole, T., Riggin, R., and Glaser, J. ''Evaluation of Method Detection Limits and Analytical Curve for EPA Method 610—PNAs,'' International Symposium on Polynuclear Aromatic Hydrocarbons, 5th, Battelle's Columbus Laboratories, Columbus, Ohio (1980).

12. ''EPA Method Study 20, Method 610 (PNA's),'' EPA 600/4–84–063, National Technical Information Service, PB84–211614, Springfield, Virginia 22161, June 1984.

TABLE 1—HIGH PERFORMANCE LIQUID CHROMATOGRAPHY CONDITIONS AND METHOD DETECTION LIMITS

Parameter	Retention time (min)	Column capacity factor (k′)	Method detection limit (µg/L) [a]
Naphthalene	16.6	12.2	1.8
Acenaphthylene	18.5	13.7	2.3
Acenaphthene	20.5	15.2	1.8
Fluorene	21.2	15.8	0.21
Phenanthrene	22.1	16.6	0.64
Anthracene	23.4	17.6	0.66
Fluoranthene	24.5	18.5	0.21
Pyrene	25.4	19.1	0.27
Benzo(a)anthracene	28.5	21.6	0.013
Chrysene	29.3	22.2	0.15
Benzo(b)fluoranthene	31.6	24.0	0.018
Benzo(k)fluoranthene	32.9	25.1	0.017
Benzo(a)pyrene	33.9	25.9	0.023
Dibenzo(a,h)anthracene	35.7	27.4	0.030
Benzo(ghi)perylene	36.3	27.8	0.076
Indeno(1,2,3-cd)pyrene	37.4	28.7	0.043

HPLC column conditions: Reverse phase HC-ODS Sil-X, 5 micron particle size, in a 25 cm × 2.6 mm ID stainless steel column. Isocratic elution for 5 min. using acetonitrile/water (4 + 6), then linear gradient elution to 100% acetonitrile over 25 min. at 0.5 mL/min flow rate. If columns having other internal diameters are used, the flow rate should be adjusted to maintain a linear velocity of 2 mm/sec.

[a] The MDL for naphthalene, acenaphthylene, acenaphthene, and fluorene were determined using a UV detector. All others were determined using a fluorescence detector.

TABLE 2—GAS CHROMATOGRAPHIC CONDITIONS AND RETENTION TIMES

Parameter	Retention time (min)
Naphthalene	4.5
Acenaphthylene	10.4
Acenaphthene	10.8
Fluorene	12.6
Phenanthrene	15.9
Anthracene	15.9
Fluoranthene	19.8
Pyrene	20.6
Benzo(a)anthracene	24.7
Chrysene	24.7
Benzo(b)fluoranthene	28.0

TABLE 2—GAS CHROMATOGRAPHIC CONDITIONS AND RETENTION TIMES—Continued

Parameter	Retention time (min)
Benzo(k)fluoranthene	28.0
Benzo(a)pyrene	29.4
Dibenzo(a,h)anthracene	36.2
Indeno(1,2,3-cd)pyrene	36.2
Benzo(ghi)perylene	38.6

GC Column conditions: Chromosorb W-AW-DCMS (100/120 mesh) coated with 3% OV–17 packed in a 1.8 × 2 mm ID glass column with nitrogen carrier gas at 40 mL/min. flow rate. Column temperature was held at 100 °C for 4 min., then programmed at 8 °C/min. to a final hold at 280 °C.

TABLE 3—QC ACCEPTANCE CRITERIA—METHOD 610

Parameter	Test conc. (µg/L)	Limit for s (µg/L)	Range for $\bar{X}$ (µg/L)	Range for P, P_s (%)
Acenaphthene	100	40.3	D–105.7	D–124
Acenaphthylene	100	45.1	22.1–112.1	D–139
Anthracene	100	28.7	11.2–112.3	D–126
Benzo(a)anthracene	10	4.0	3.1–11.6	12–135
Benzo(a)pyrene	10	4.0	0.2–11.0	D–128
Benzo(b)fluor-anthene	10	3.1	1.8–13.8	6–150
Benzo(ghi)perylene	10	2.3	D–10.7	D–116
Benzo(k)fluo-ranthene	5	2.5	D–7.0	D–159
Chrysene	10	4.2	D–17.5	D–199
Dibenzo(a,h)an-thracene	10	2.0	0.3–10.0	D–110
Fluoranthene	10	3.0	2.7–11.1	14–123
Fluorene	100	43.0	D–119	D–142
Indeno(1,2,3–cd)pyrene	10	3.0	1.2–10.0	D–116
Naphthalene	100	40.7	21.5–100.0	D–122
Phenanthrene	100	37.7	8.4–133.7	D–155
Pyrene	10	3.4	1.4–12.1	D–140

s = Standard deviation of four recovery measurements, in µg/L (Section 8.2.4).
$\bar{X}$ = Average recovery for four recovery measurements, in µg/L (Section 8.2.4).
P, P_s = Percent recovery measured (Section 8.3.2, Section 8.4.2).
D = Detected; result must be greater than zero.

NOTE: These criteria are based directly upon the method performance data in Table 4. Where necessary, the limits for recovery have been broadened to assure applicability of the limits to concentrations below those used to develop Table 4.

TABLE 4—METHOD ACCURACY AND PRECISION AS FUNCTIONS OF CONCENTRATION—METHOD 610

Parameter	Accuracy, as recovery, X′ (μg/L)	Single analyst precision, s_r′ (μg/L)	Overall precision, S′ (μg/L)
Acenaphthene	0.52C + 0.54	0.39$\bar{X}$ + 0.76	0.53$\bar{X}$ + 1.32
Acenaphthylene	0.69C − 1.89	0.36$\bar{X}$ + 0.29	0.42$\bar{X}$ + 0.52
Anthracene	0.63C − 1.26	0.23$\bar{X}$ + 1.16	0.41$\bar{X}$ + 0.45
Benzo(a)anthracene	0.73C + 0.05	0.28$\bar{X}$ + 0.04	0.34$\bar{X}$ + 0.02
Benzo(a)pyrene	0.56C + 0.01	0.38$\bar{X}$ − 0.01	0.53$\bar{X}$ − 0.01
Benzo(b)fluoranthene	0.78C + 0.01	0.21$\bar{X}$ + 0.01	0.38$\bar{X}$ − 0.00
Benzo(ghi)perylene	0.44C + 0.30	0.25$\bar{X}$ + 0.04	0.58$\bar{X}$ + 0.10
Benzo(k)fluoranthene	0.59C + 0.00	0.44$\bar{X}$ − 0.00	0.69$\bar{X}$ + 0.01
Chrysene	0.77C − 0.18	0.32$\bar{X}$ − 0.18	0.66$\bar{X}$ − 0.22
Dibenzo(a,h)anthracene	0.41C + 0.11	0.24$\bar{X}$ + 0.02	0.45$\bar{X}$ + 0.03
Fluoranthene	0.68C + 0.07	0.22$\bar{X}$ + 0.06	0.32$\bar{X}$ + 0.03
Fluorene	0.56C − 0.52	0.44$\bar{X}$ − 1.12	0.63$\bar{X}$ − 0.65
Indeno(1,2,3–cd)pyrene	0.54C + 0.06	0.29$\bar{X}$ + 0.02	0.42$\bar{X}$ + 0.01
Naphthalene	0.57C − 0.70	0.39$\bar{X}$ − 0.18	0.41$\bar{X}$ + 0.74
Phenanthrene	0.72C − 0.95	0.29$\bar{X}$ + 0.05	0.47$\bar{X}$ − 0.25
Pyrene	0.69C − 0.12	0.25$\bar{X}$ + 0.14	0.42$\bar{X}$ − 0.00

X′ = Expected recovery for one or more measurements of a sample containing a concentration of C, in μg/L.
s_r′ = Expected single analyst standard deviation of measurements at an average concentration found of $\bar{X}$, in μg/L.
S′ = Expected interlaboratory standard deviation of measurements at an average concentration found of $\bar{X}$, in μg/L.
C = True value for the concentration, in μg/L.
$\bar{X}$ = Average recovery found for measurements of samples containing a concentration of C, in μg/L.

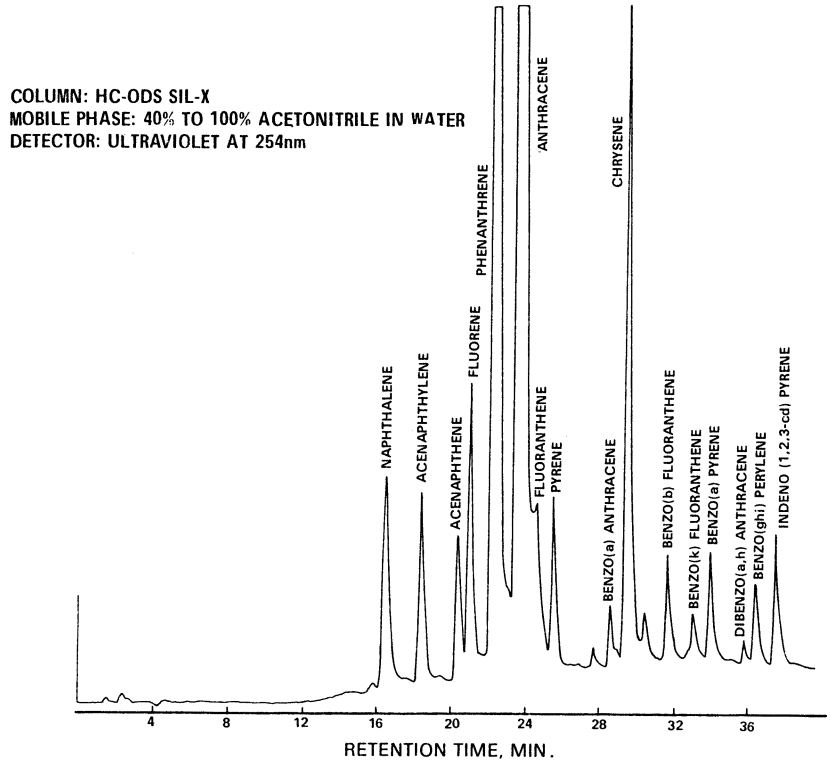

Figure 1. Liquid chromatogram of polynuclear aromatic hydrocarbons.

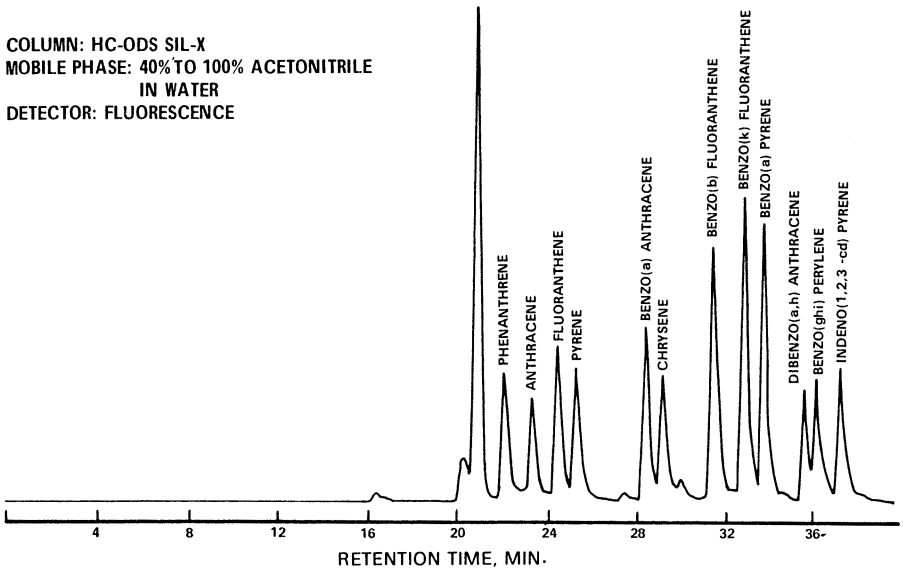

Figure 2. Liquid chromatogram of polynuclear aromatic hydrocarbons.

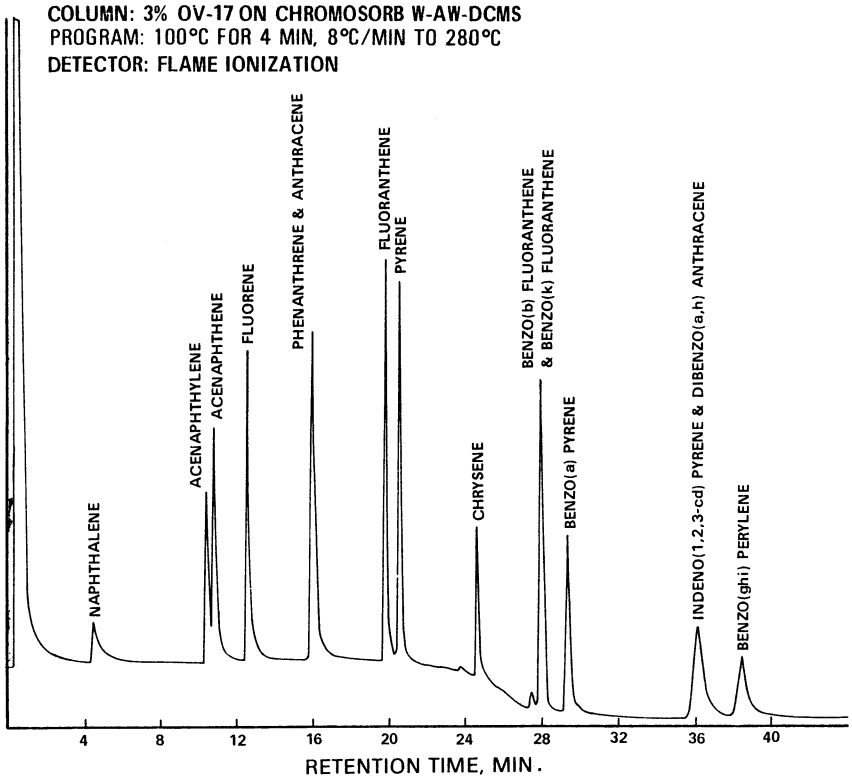

Figure 3. Gas chromatogram of polynuclear aromatic hydrocarbons.

METHOD 611—HALOETHERS

1. Scope and Application

1.1 This method covers the determination of certain haloethers. The following parameters can be determined by this method:

Parameter	STORET No.	CAS No.
Bis(2-chloroethyl) ether	34273	111–44–4
Bis(2-chloroethoxy) methane	34278	111–91–1
2, 2′-oxybis (1-chloropropane)	34283	108–60–1
4-Bromophenyl phenyl ether	34636	101–55–3
4-Chlorophenyl phenyl ether	34641	7005–72–3

1.2 This is a gas chromatographic (GC) method applicable to the determination of the compounds listed above in municipal and industrial discharges as provided under 40 CFR 136.1. When this method is used to analyze unfamiliar samples for any or all of the compounds above, compound identifications should be supported by at least one additional qualitative technique. This method describes analytical conditions for a second gas chromatographic column that can be used to confirm measurements made with the primary column. Method 625 provides gas chromatograph/mass spectrometer (GC/MS) conditions appropriate for the qualitative and quantitative confirmation of results for all of the parameters listed above, using the extract produced by this method.

1.3 The method detection limit (MDL, defined in Section 14.1)[1] for each parameter is listed in Table 1. The MDL for a specific wastewater may differ from those listed, depending upon the nature of interferences in the sample matrix.

1.4 The sample extraction and concentration steps in this method are essentially the same as in Methods 606, 608, 609, and 612. Thus, a single sample may be extracted to measure the parameters included in the scope of each of these methods. When cleanup is required, the concentration levels must be high enough to permit selecting aliquots, as necessary, to apply appropriate cleanup procedures. The analyst is allowed the latitude, under Section 12, to select chromatographic conditions appropriate for the simultaneous measurement of combinations of these parameters.

1.5 Any modification of this method, beyond those expressly permitted, shall be considered as a major modification subject to application and approval of alternate test procedures under 40 CFR 136.4 and 136.5.

1.6 This method is restricted to use by or under the supervision of analysts experienced in the use of a gas chromatograph and in the interpretation of gas chromatograms. Each analyst must demonstrate the ability to generate acceptable results with this method using the procedure described in Section 8.2.

2. Summary of Method

2.1 A measured volume of sample, approximately 1–L, is extracted with methylene chloride using a separatory funnel. The methylene chloride extract is dried and exchanged to hexane during concentration to a volume of 10 mL or less. The extract is separated by gas chromatography and the parameters are then measured with a halide specific detector.[2]

2.2 The method provides a Florisil column cleanup procedure to aid in the elimination of interferences that may be encountered.

3. Interferences

3.1 Method interferences may be caused by contaminants in solvents, reagents, glassware, and other sample processing hardware that lead to discrete artifacts and/or elevated baselines in gas chromatograms. All of these materials must be routinely demonstrated to be free from interferences under the conditions of the analysis by running laboratory reagent blanks as described in Section 8.1.3.

3.1.1 Glassware must be scrupulously cleaned.[3] Clean all glassware as soon as possible after use by rinsing with the last solvent used in it. Solvent rinsing should be followed be detergent washing with hot water, and rinses with tap water and distilled water. The glassware should then be drained dry, and heated in a muffle furnace at 400 °C for 15 to 30 min. Some thermally stable materials, such a PCBs, may not be eliminated by this treatment. Solvent rinses with acetone and pesticide quality hexane may be substituted for the muffle furnace heating. Thorough rinsing with such solvents usually eliminates PCB interference. Volumetric ware should not be heated in a muffle furnace. After drying and cooling, glassware should be sealed and stored in a clean environment to prevent any accumulation of dust or other contaminants. Store inverted or capped with aluminum foil.

3.1.2 The use of high purity reagents and solvents helps to minimize interference problems. Purification of solvents by distillation in all-glass systems may be required.

3.2 Matrix interferences may be caused by contaminants that are co-extracted from the sample. The extent of matrix interferences will vary considerably from source to source, depending upon the nature and diversity of the industrial complex or municipality being sampled. The cleanup procedure in Section 11 can be used to overcome many of these interferences, but unique samples may require additional cleanup approaches to achieve the MDL listed in Table 1.

3.3 Dichlorobenzenes are known to coelute with haloethers under some gas chromatographic conditions. If these materials are present together in a sample, it may be necessary to analyze the extract with two different column packings to completely resolve all of the compounds.

4. Safety

4.1 The toxicity or carcinogenicity of each reagent used in this method has not been precisely defined; however, each chemical compound should be treated as a potential health hazard. From this viewpoint, exposure to these chemicals must be reduced to the lowest possible level by whatever means available. The laboratory is responsible for maintaining a current awareness file of OSHA regulations regarding the safe handling of the chemicals specified in this method. A reference file of material data handling sheets should also be made available to all personnel involved in the chemical analysis. Additional references to laboratory safety are available and have been identified[4M6] for the information of the analyst.

5. Apparatus and Materials

5.1 Sampling equipment, for discrete or composite sampling.

5.1.1 Grab sample bottle—1-L or 1-qt, amber glass, fitted with a screw cap lined with Teflon. Foil may be substituted for Teflon if the sample is not corrosive. If amber bottles are not available, protect samples from light. The bottle and cap liner must be washed, rinsed with acetone or methylene

chloride, and dried before use to minimize contamination.

5.1.2 Automatic sampler (optional)—The sampler must incorporate glass sample containers for the collection of a minimum of 250 mL of sample. Sample containers must be kept refrigerated at 4 °C and protected from light during compositing. If the sampler uses a peristaltic pump, a minimum length of compressible silicone rubber tubing may be used. Before use, however, the compressible tubing should be thoroughly rinsed with methanol, followed by repeated rinsings with distilled water to minimize the potential for contamination of the sample. An integrating flow meter is required to collect flow proportional composites.

5.2 Glassware (All specifications are suggested. Catalog numbers are included for illustration only.):

5.2.1 Separatory funnel—2-L, with Teflon stopcock.

5.2.2 Drying column—Chromatographic column, approximately 400 mm long × 19 mm ID, with coarse frit filter disc.

5.2.3 Chromatographic column—400 mm long × 19 mm ID, with Teflon stopcock and coarse frit filter disc at bottom (Kontes K–420540–0224 or equivalent).

5.2.4 Concentrator tube, Kuderna-Danish—10-mL, graduated (Kontes K–570050–1025 or equivalent). Calibration must be checked at the volumes employed in the test. Ground glass stopper is used to prevent evaporation of extracts.

5.2.5 Evaporative flask, Kuderna-Danish—500-mL (Kontes K–570001–0500 or equivalent). Attach to concentrator tube with springs.

5.2.6 Snyder column, Kuderna-Danish—Three-ball macro (Kontes K–503000–0121 or equivalent).

5.2.7 Vials—10 to 15-mL, amber glass, with Teflon-lined screw cap.

5.3 Boiling chips—Approximately 10/40 mesh. Heat to 400 °C for 30 min or Soxhlet extract with methylene chloride.

5.4 Water bath—Heated, with concentric ring cover, capable of temperature control (±2 °C). The bath should be used in a hood.

5.5 Balance—Analytical, capable of accurately weighing 0.0001 g.

5.6 Gas chromatograph—An analytical system complete with temperature programmable gas chromatograph suitable for on-column injection and all required accessories including syringes, analytical columns, gases, detector, and strip-chart recorder. A data system is recommended for measuring peak areas.

5.6.1 Column 1—1.8 m long × 2 mm ID glass, packed with 3% SP–1000 on Supelcoport (100/120 mesh) or equivalent. This column was used to develop the method performance statements in Section 14. Guidelines for the use of alternate column packings are provided in Section 12.1.

5.6.2 Column 2—1.8 m long × 2 mm ID glass, packed with 2,6-diphenylene oxide polymer (60/80 mesh), Tenax, or equivalent.

5.6.3 Detector—Halide specific detector: electrolytic conductivity or microcoulometric. These detectors have proven effective in the analysis of wastewaters for the parameters listed in the scope (Section 1.1). The Hall conductivity detector was used to develop the method performance statements in Section 14. Guidelines for the use of alternate detectors are provided in Section 12.1. Although less selective, an electron capture detector is an acceptable alternative.

6. Reagents

6.1 Reagent water—Reagent water is defined as a water in which an interferent is not observed at the MDL of the parameters of interest.

6.2 Sodium thiosulfate—(ACS) Granular.

6.3 Acetone, hexane, methanol, methylene chloride, petroleum ether (boiling range 30–60 °C)—Pesticide quality or equivalent.

6.4 Sodium sulfate—(ACS) Granular, anhydrous. Purify by heating at 400 °C for 4 h in a shallow tray.

6.5 Florisil—PR Grade (60/100 mesh). Purchase activated at 1250 °F and store in the dark in glass containers with ground glass stoppers or foil-lined screw caps. Before use, activate each batch at least 16 h at 130 °C in a foil-covered glass container and allow to cool.

6.6 Ethyl ether—Nanograde, redistilled in glass if necessary.

6.6.1 Ethyl ether must be shown to be free of peroxides before it is used as indicated by EM Laboratories Quant test strips. (Available from Scientific Products Co., Cat. No. P1126–8, and other suppliers.)

6.6.2 Procedures recommended for removal of peroxides are provided with the test strips. After cleanup, 20 mL of ethyl alcohol preservative must be added to each liter of ether.

6.7 Stock standard solutions (1.00 μg/μL)—Stock standard solutions can be prepared from pure standard materials or purchased as certified solutions.

6.7.1 Prepare stock standard solutions by accurately weighing about 0.0100 g of pure material. Dissolve the material in acetone and dilute to volume in a 10-mL volumetric flask. Larger volumes can be used at the convenience of the analyst. When compound purity is assayed to be 96% or greater, the weight can be used without correction to calculate the concentration of the stock standard. Commercially prepared stock standards can be used at any concentration if they are certified by the manufacturer or by an independent source.

6.7.2 Transfer the stock standard solutions into Teflon-sealed screw-cap bottles. Store at 4 °C and protect from light. Stock

standard solutions should be checked frequently for signs of degradation or evaporation, especially just prior to preparing calibration standards from them.

6.7.3 Stock standard solutions must be replaced after six months, or sooner if comparison with check standards indicates a problem.

6.8 Quality control check sample concentrate—See Section 8.2.1.

7. Calibration

7.1 Establish gas chromatographic operating conditions equivalent to those given in Table 1. The gas chromatographic system can be calibrated using the external standard technique (Section 7.2) or the internal standard technique (Section 7.3).

7.2 External standard calibration procedure:

7.2.1 Prepare calibration standards at a minimum of three concentration levels for each parameter of interest by adding volumes of one or more stock standards to a volumetric flask and diluting to volume with hexane. One of the external standards should be at a concentration near, but above, the MDL (Table 1) and the other concentrations should correspond to the expected range of concentrations found in real samples or should define the working range of the detector.

7.2.2 Using injections of 2 to 5 µL, analyze each calibration standard according to Section 12 and tabulate peak height or area responses against the mass injected. The results can be used to prepare a calibration curve for each compound. Alternatively, if the ratio of response to amount injected (calibration factor) is a constant over the working range (<10% relative standard deviation, RSD), linearity through the origin can be assumed and the average ratio or calibration factor can be used in place of a calibration curve.

7.3 Internal standard calibration procedure—To use this approach, the analyst must select one or more internal standards that are similar in analytical behavior to the compounds of interest. The analyst must further demonstrate that the measurement of the internal standard is not affected by method or matrix interferences. Because of these limitations, no internal standard can be suggested that is applicable to all samples.

7.3.1 Prepare calibration standards at a minimum of three concentration levels for each parameter of interest by adding volumes of one or more stock standards to a volumetric flask. To each calibration standard, add a known constant amount of one or more internal standards, and dilute to volume with hexane. One of the standards should be at a concentration near, but above, the MDL and the other concentrations should correspond to the expected range of concentrations found in real samples or should define the working range of the detector.

7.3.2 Using injections of 2 to 5 µL, analyze each calibration standard according to Section 12 and tabulate peak height or area responses against concentration for each compound and internal standard. Calculate response factors (RF) for each compound using Equation 1.

$$RF = \frac{(A_s)(C_{is})}{(A_{is})(C_s)}$$

Equation 1

where:

A_s = Response for the parameter to be measured.

A_{is} = Response for the internal standard.

C_{is} = Concentration of the internal standard (µg/L).

C_s = Concentration of the parameter to be measured (µg/L).

If the RF value over the working range is a constant (<10% RSD), the RF can be assumed to be invariant and the average RF can be used for calculations. Alternatively, the results can be used to plot a calibration curve of response ratios, A_s/A_{is}, vs. RF.

7.4 The working calibration curve, calibration factor, or RF must be verified on each working day by the measurement of one or more calibration standards. If the response for any parameter varies from the predicted response by more than ±15%, a new calibration curve must be prepared for that compound.

7.5 The cleanup procedure in Section 11 utilizes Florisil column chromatography. Florisil from different batches or sources may vary in adsorptive capacity. To standardize the amount of Florisil which is used, the use of lauric acid value[7] is suggested. The referenced procedure determines the adsorption from hexane solution of lauric acid (mg) per g of Florisil. The amount of Florisil to be used for each column is calculated by dividing 110 by this ratio and multiplying by 20 g.

7.6 Before using any cleanup procedure, the analyst must process a series of calibration standards through the procedure to validate elution patterns and the absence of interferences from the reagents.

8. Quality Control

8.1 Each laboratory that uses this method is required to operate a formal quality control program. The minimum requirements of this program consist of an initial demonstration of laboratory capability and an ongoing analysis of spiked samples to evaluate and document data quality. The laboratory must maintain records to document the quality of data that is generated. Ongoing data quality

checks are compared with established performance criteria to determine if the results of analyses meet the performance characteristics of the method. When results of sample spikes indicate atypical method performance, a quality control check standard must be analyzed to confirm that the measurements were performed in an in-control mode of operation.

8.1.1 The analyst must make an initial, one-time, demonstration of the ability to generate acceptable accuracy and precision with this method. This ability is established as described in Section 8.2.

8.1.2 In recognition of advances that are occurring in chromatography, the analyst is permitted certain options (detailed in Sections 10.4, 11.1, and 12.1) to improve the separations or lower the cost of measurements. Each time such a modification is made to the method, the analyst is required to repeat the procedure in Section 8.2.

8.1.3 Before processing any samples, the analyst must analyze a reagent water blank to demonstrate that interferences from the analytical system and glassware are under control. Each time a set of samples is extracted or reagents are changed, a reagent water blank must be processed as a safeguard against laboratory contamination.

8.1.4 The laboratory must, on an ongoing basis, spike and analyze a minimum of 10% of all samples to monitor and evaluate laboratory data quality. This procedure is described in Section 8.3.

8.1.5 The laboratory must, on an ongoing basis, demonstrate through the analyses of quality control check standards that the operation of the measurement system is in control. This procedure is described in Section 8.4. The frequency of the check standard analyses is equivalent to 10% of all samples analyzed but may be reduced if spike recoveries from samples (Section 8.3) meet all specified quality control criteria.

8.1.6 The laboratory must maintain performance records to document the quality of data that is generated. This procedure is described in Section 8.5.

8.2 To establish the ability to generate acceptable accuracy and precision, the analyst must perform the following operations.

8.2.1 A quality control (QC) check sample concentrate is required containing each parameter of interest at a concentration of 100 µg/mL in acetone. The QC check sample concentrate must be obtained from the U.S. Environmental Protection Agency, Environmental Monitoring and Support Laboratory in Cincinnati, Ohio, if available. If not available from that source, the QC check sample concentrate must be obtained from another external source. If not available from either source above, the QC check sample concentrate must be prepared by the laboratory using stock standards prepared independently from those used for calibration.

8.2.2 Using a pipet, prepare QC check samples at a concentration of 100 µg/L by adding 1.00 mL of QC check sample concentrate to each of four 1–L aliquots of reagent water.

8.2.3 Analyze the well-mixed QC check samples according to the method beginning in Section 10.

8.2.4 Calculate the average recovery ($\bar{X}$) in µg/L, and the standard deviation of the recovery (s) in µg/L, for each parameter using the four results.

8.2.5 For each parameter compare s and $\bar{X}$ with the corresponding acceptance criteria for precision and accuracy, respectively, found in Table 2. If s and $\bar{X}$ for all parameters of interest meet the acceptance criteria, the system performance is acceptable and analysis of actual samples can begin. If any individual s exceeds the precision limit or any individual $\bar{X}$ falls outside the range for accuracy, the system performance is unacceptable for that parameter. Locate and correct the source of the problem and repeat the test for all parameters of interest beginning with Section 8.2.2.

8.3 The laboratory must, on an ongoing basis, spike at least 10% of the samples from each sample site being monitored to assess accuracy. For laboratories analyzing one to ten samples per month, at least one spiked sample per month is required.

8.3.1. The concentration of the spike in the sample should be determined as follows:

8.3.1.1 If, as in compliance monitoring, the concentration of a specific parameter in the sample is being checked against a regulatory concentration limit, the spike should be at that limit or 1 to 5 times higher than the background concentration determined in Section 8.3.2, whichever concentration would be larger.

8.3.1.2 If the concentration of a specific parameter in the sample is not being checked against a limit specific to that parameter, the spike should be at 100 µg/L or 1 to 5 times higher than the background concentration determined in Section 8.3.2, whichever concentration would be larger.

8.3.1.3 If it is impractical to determine background levels before spiking (e.g., maximum holding times will be exceeded), the spike concentration should be (1) the regulatory concentration limit, if any; or, if none (2) the larger of either 5 times higher than the expected background concentration or 100 µg/L.

8.3.2 Analyze one sample aliquot to determine the background concentration (B) of each parameter. If necessary, prepare a new QC check sample concentrate (Section 8.2.1) appropriate for the background concentrations in the sample. Spike a second sample aliquot with 1.0 mL of the QC check sample concentrate and analyze it to determine the concentration after spiking (A) of each parameter. Calculate each percent recovery (P)

as 100(A − B)%/T, where T is the known true value of the spike.

8.3.3 Compare the percent recovery (P) for each parameter with the corresponding QC acceptance criteria found in Table 2. These acceptance criteria were calculated to include an allowance for error in measurement of both the background and spike concentrations, assuming a spike to background ratio of 5:1. This error will be accounted for to the extent that the analyst's spike to background ratio approaches 5:1.[8] If spiking was performed at a concentration lower than 100 µg/L, the analyst must use either the QC acceptance criteria in Table 2, or optional QC acceptance criteria calculated for the specific spike concentration. To calculate optional acceptance criteria for the recovery of a parameter: (1) Calculate accuracy (X′) using the equation in Table 3, substituting the spike concentration (T) for C; (2) calculate overall precision (S′) using the equation in Table 3, substituting X′ for $\bar{X}$; (3) calculate the range for recovery at the spike concentration as (100 X′/T)±2.44(100 S′/T)%.[8]

8.3.4 If any individual P falls outside the designated range for recovery, that parameter has failed the acceptance criteria. A check standard containing each parameter that failed the criteria must be analyzed as described in Section 8.4.

8.4 If any parameter fails the acceptance criteria for recovery in Section 8.3, a QC check standard containing each parameter that failed must be prepared and analyzed.

NOTE: The frequency for the required analysis of a QC check standard will depend upon the number of parameters being simultaneously tested, the complexity of the sample matrix, and the performance of the laboratory.

8.4.1 Prepare the QC check standard by adding 1.0 m/L of QC check sample concentrate (Section 8.2.1 or 8.3.2) to 1 L of reagent water. The QC check standard needs only to contain the parameters that failed criteria in the test in Section 8.3.

8.4.2 Analyze the QC check standard to determine the concentration measured (A) of each parameter. Calculate each percent recovery (P_s) as 100 (A/T)%, where T is the true value of the standard concentration.

8.4.3 Compare the percent recovery (P_s) for each parameter with the corresponding QC acceptance criteria found in Table 2. Only parameters that failed the test in Section 8.3 need to be compared with these criteria. If the recovery of any such parameter falls outside the designated range, the laboratory performance for that parameter is judged to be out of control, and the problem must be immediately identified and corrected. The analytical result for that parameter in the unspiked sample is suspect and may not be reported for regulatory compliance purposes.

8.5 As part of the QC program for the laboratory, method accuracy for wastewater samples must be assessed and records must be maintained. After the analysis of five spiked wastewater samples as in Section 8.3, calculate the average percent recovery ($\bar{P}$) and the standard deviation of the percent recovery (s_p). Express the accuracy assessment as a percent recovery interval from $\bar{P}$–2s_p to $\bar{P}$ + 2s_p. If $\bar{P}$ = 90% and s_p = 10%, for example, the accuracy interval is expressed as 70–110%. Update the accuracy assessment for each parameter on a regular basis (e.g. after each five to ten new accuracy measurements).

8.6 It is recommended that the laboratory adopt additional quality assurance practices for use with this method. The specific practices that are most productive depend upon the needs of the laboratory and the nature of the samples. Field duplicates may be analyzed to assess the precision of the environmental measurements. When doubt exists over the identification of a peak on the chromatogram, confirmatory techniques such as gas chromatography with a dissimilar column, specific element detector, or mass spectrometer must be used. Whenever possible, the laboratory should analyze standard reference materials and participate in relevant performance evaluation studies.

9. Sample Collection, Preservation, and Handling

9.1 Grab samples must be collected in glass containers. Conventional sampling practices[9] should be followed, except that the bottle must not be prerinsed with sample before collection. Composite samples should be collected in refrigerated glass containers in accordance with the requirements of the program. Automatic sampling equipment must be as free as possible of Tygon tubing and other potential sources of contamination.

9.2 All samples must be iced or refrigerated at 4 °C from the time of collection until extraction. Fill the sample bottles and, if residual chlorine is present, add 80 mg of sodium thiosulfate per liter of sample and mix well. EPA Methods 330.4 and 330.5 may be used for measurement of residual chlorine.[10] Field test kits are available for this purpose.

9.3 All samples must be extracted within 7 days of collection and completely analyzed within 40 days of extraction.[2]

10. Sample Extraction

10.1 Mark the water meniscus on the side of the sample bottle for later determination of sample volume. Pour the entire sample into a 2-L separatory funnel.

10.2 Add 60 mL methylene chloride to the sample bottle, seal, and shake 30 s to rinse the inner surface. Transfer the solvent to the separatory funnel and extract the sample by shaking the funnel for 2 min with periodic

venting to release excess pressure. Allow the organic layer to separate from the water phase for a minimum of 10 min. If the emulsion interface between layers is more than one-third the volume of the solvent layer, the analyst must employ mechanical techniques to complete the phase separation. The optimum technique depends upon the sample, but may include stirring, filtration of the emulsion through glass wool, centrifugation, or other physical methods. Collect the methylene chloride extract in a 250-mL Erlenmeyer flask.

10.3 Add a second 60-mL volume of methylene chloride to the sample bottle and repeat the extraction procedure a second time, combining the extracts in the Erlenmeyer flask. Perform a third extraction in the same manner.

10.4 Assemble a Kuderna-Danish (K-D) concentrator by attaching a 10-mL concentrator tube to a 500-mL evaporative flask. Other concentration devices or techniques may be used in place of the K-D concentrator if the requirements of Section 8.2 are met.

10.5 Pour the combined extract through a solvent-rinsed drying column containing about 10 cm of anhydrous sodium sulfate, and collect the extract in the K-D concentrator. Rinse the Erlenmeyer flask and column with 20 to 30 mL of methylene chloride to complete the quantitative transfer.

10.6 Add one or two clean boiling chips to the evaporative flask and attach a three-ball Snyder column. Prewet the Snyder column by adding about 1 mL of methylene chloride to the top. Place the K-D apparatus on a hot water bath (60 to 65 °C) so that the concentrator tube is partially immersed in the hot water, and the entire lower rounded surface of the flask is bathed with hot vapor. Adjust the vertical position of the apparatus and the water temperature as required to complete the concentration in 15 to 20 min. At the proper rate of distillation the balls of the column will actively chatter but the chambers will not flood with condensed solvent. When the apparent volume of liquid reaches 1 mL, remove the K-D apparatus and allow it to drain and cool for at least 10 min.

NOTE: Some of the haloethers are very volatile and significant losses will occur in concentration steps if care is not exercised. It is important to maintain a constant gentle evaporation rate and not to allow the liquid volume to fall below 1 to 2 mL before removing the K-D apparatus from the hot water bath.

10.7 Momentarily remove the Snyder column, add 50 mL of hexane and a new boiling chip, and reattach the Snyder column. Raise the temperature of the water bath to 85 to 90 °C. Concentrate the extract as in Section 10.6, except use hexane to prewet the column. The elapsed time of concentration should be 5 to 10 min.

10.8 Remove the Snyder column and rinse the flask and its lower joint into the concentrator tube with 1 to 2 mL of hexane. A 5-mL syringe is recommended for this operation. Stopper the concentrator tube and store refrigerated if further processing will not be performed immediately. If the extract will be stored longer than two days, it should be transferred to a Teflon-sealed screw-cap vial. If the sample extract requires no further cleanup, proceed with gas chromatographic analysis (Section 12). If the sample requires further cleanup, proceed to Section 11.

10.9 Determine the original sample volume by refilling the sample bottle to the mark and transferring the liquid to a 1000-mL graduated cylinder. Record the sample volume to the nearest 5 mL.

11. Cleanup and Separation

11.1 Cleanup procedures may not be necessary for a relatively clean sample matrix. If particular circumstances demand the use of a cleanup procedure, the analyst may use the procedure below or any other appropriate procedure. However, the analyst first must demonstrate that the requirements of Section 8.2 can be met using the method as revised to incorporate the cleanup procedure.

11.2 Florisil column cleanup for haloethers:

11.2.1 Adjust the sample extract volume to 10 mL.

11.2.2 Place a weight of Florisil (nominally 20 g) predetermined by calibration (Section 7.5), into a chromatographic column. Tap the column to settle the Florisil and add 1 to 2 cm of anhydrous sodium sulfate to the top.

11.2.3 Preelute the column with 50 to 60 mL of petroleum ether. Discard the eluate and just prior to exposure of the sodium sulfate layer to the air, quantitatively transfer the sample extract onto the column by decantation and subsequent petroleum ether washings. Discard the eluate. Just prior to exposure of the sodium sulfate layer to the air, begin eluting the column with 300 mL of ethyl ether/petroleum ether (6 + 94) (V/V). Adjust the elution rate to approximately 5 mL/min and collect the eluate in a 500-mL K-D flask equipped with a 10-mL concentrator tube. This fraction should contain all of the haloethers.

11.2.4 Concentrate the fraction as in Section 10.6, except use hexane to prewet the column. When the apparatus is cool, remove the Snyder column and rinse the flask and its lower joint into the concentrator tube with hexane. Adjust the volume of the cleaned up extract to 10 mL with hexane and analyze by gas chromatography (Section 12).

12. Gas Chromatography

12.1 Table 1 summarizes the recommended operating conditions for the gas chromatograph. Included in this table are retention times and MDL that can be achieved under these conditions. Examples of the separations achieved by Columns 1 and 2 are shown in Figures 1 and 2, respectively. Other packed or capillary (open-tubular) columns, chromatographic conditions, or detectors may be used if the requirements of Section 8.2 are met.

12.2 Calibrate the system daily as described in Section 7.

12.3 If the internal standard calibration procedure is being used, the internal standard must be added to the sample extract and mixed thoroughly immediately before injection into the gas chromatrograph.

12.4 Inject 2 to 5 µL of the sample extract or standard into the gas chromatograph using the solvent-flush technique.[11] Smaller (1.0 µL) volumes may be injected if automatic devices are employed. Record the volume injected to the nearest 0.05 µL, the total extract volume, and the resulting peak size in area or peak height units.

12.5 Identify the parameters in the sample by comparing the retention times of the peaks in the sample chromatogram with those of the peaks in standard chromatograms. The width of the retention time window used to make identifications should be based upon measurements of actual retention time variations of standards over the course of a day. Three times the standard deviation of a retention time for a compound can be used to calculate a suggested window size; however, the experience of the analyst should weight heavily in the interpretation of chromatograms.

12.6 If the response for a peak exceeds the working range of the system, dilute the extract and reanalyze.

12.7 If the measurement of the peak response is prevented by the presence of interferences, further cleanup is required.

13. Calculations

13.1 Determine the concentration of individual compounds in the sample.

13.1.1 If the external standard calibration procedure is used, calculate the amount of material injected from the peak response using the calibration curve or calibration factor determined in Section 7.2.2. The concentration in the sample can be calculated from Equation 2.

$$\text{Concentration } (\mu g/L) = \frac{(A)(V_t)}{(V_i)(V_s)}$$

Equation 2

where:

A = Amount of material injected (ng).
V_i = Volume of extract injected (µL).
V_t = Volume of total extract (µL).
V_s = Volume of water extracted (mL).

13.1.2 If the internal standard calibration procedure is used, calculate the concentration in the sample using the response factor (RF) determined in Section 7.3.2 and Equation 3.

$$\text{Concentration } (\mu g/L) = \frac{(A_s)(I_s)}{(A_{is})(RF)(V_o)}$$

Equation 3

where:

A_s = Response for the parameter to be measured.
A_{is} = Response for the internal standard.
I_s = Amount of internal standard added to each extract (µg).
V_o = Volume of water extracted (L).

13.2 Report results in µg/L without correction for recovery data. All QC data obtained should be reported with the sample results.

14. Method Performance

14.1 The method detection limit (MDL) is defined as the minimum concentration of a substance that can be measured and reported with 99% confidence that the value is above zero.[1] The MDL concentrations listed in Table 1 were obtained using reagent water.[12] Similar results were achieved using representative wastewaters. The MDL actually achieved in a given analysis will vary depending on instrument sensitivity and matrix effects.

14.2 This method has been tested for linearity of spike recovery from reagent water and has been demonstrated to be applicable over the concentration range from 4 × MDL to 1000 × MDL.[12]

14.3 This method was tested by 20 laboratories using reagent water, drinking water, surface water, and three industrial wastewaters spiked at six concentrations over the range 1.0 to 626 µ/L.[12] Single operator precision, overall precision, and method accuracy were found to be directly related to the concentration of the parameter and essentially independent of the sample matrix. Linear equations to describe these relationships are presented in Table 3.

REFERENCES

1. 40 CFR part 136, appendix B.

2. ''Determination of Haloethers in Industrial and Municipal Wastewaters,'' EPA 600/4–81–062, National Technical Information Service, PB81–232290, Springfield, Virginia 22161, July 1981.

3. ASTM Annual Book of Standards, Part 31, D3694–78. ''Standard Practices for Preparation of Sample Containers and for Preservation of Organic Constitutents,'' American Society for Testing and Materials, Philadelphia.

4. ''Carcinogens—Working Carcinogens, '' Department of Health, Education, and Welfare, Public Health Services, Center for Disease Control, National Institute for Occupational Safety and Health, Publication No. 77–206, August 1977.

5. ''OSHA Safety and Health Standards, General Industry,'' (29 CFR part 1910), Occupational Safety and Health Administration, OSHA 2206 (Revised, January 1976).

6. ''Safety in Academic Chemistry Laboratories,'' American Chemical Society Publication, Committee on Chemical Safety, 3rd Edition, 1979.

7. Mills., P.A. ''Variation of Florisil Activity: Simple Method for Measuring Absorbent Capacity and Its Use in Standardizing Florisil Columns,'' *Journal of the Association of Official Analytical Chemists*, *51*, 29 (1968).

8. Provost, L.P., and Elder, R.S. ''Interpretation of Percent Recovery Data,'' *American Laboratory*, *15*, 58–63 (1983). (The value 2.44 used in the equation in Section 8.3.3 is two times the value 1.22 derived in this report.)

9. ASTM Annual Book of Standards, Part 31, D3370–76. ''Standard Practices for Sampling Water,'' American Society for Testing and Materials, Philadelphia.

10. ''Methods 330.4 (Titrimetric, DPD-FAS) and 330.5 (Spectrophotometric, DPD) for Chlorine, Total Residual,'' Methods for Chemical Analysis of Water and Wastes, EPA–600/4–79–020, U.S. Environmental Protection Agency, Environmental Monitoring and Support Laboratory, Cincinnati, Ohio 45268, March 1979.

11. Burke, J.A. ''Gas Chromatography for Pesticide Residue Analysis; Some Practical Aspects,'' *Journal of the Association of Official Analytical Chemists*, *48*, 1037 (1965).

12. ''EPA Method Study 21, Method 611, Haloethers,'' EPA 600/4–84–052, National Technical Information Service, PB84–205939, Springfield, Virginia 22161, June 1984.

TABLE 1—CHROMATOGRAPHIC CONDITIONS AND METHODS DETECTION LIMITS

Parameters	Retention time (min)		Method detection limit (μ/L)
	Column 1	Column 2	
Bis(2-chloroisopropyl) ether	8.4	9.7	0.8
Bis(2-chloroethyl) ether	9.3	9.1	0.3
Bis(2-chloroethoxy) methane	13.1	10.0	0.5
4-Chlorophenyl ether	19.4	15.0	3.9
4-Bromophenyl phenyl ether	21.2	16.2	2.3

Column 1 conditions: Supelcoport (100/120 mesh) coated with 3% SP–1000 packed in a 1.8 m long × 2 mm ID glass column with helium carrier gas at 40 mL/min. flow rate. Column temperature held at 60 °C for 2 min. after injection then programmed at 8 °C/min. to 230 °C and held for 4 min. Under these conditions the retention time for Aldrin is 22.6 min.

Column 2 conditions: Tenax-GC (60/80 mesh) packed in a 1.8 m long × 2mm ID glass column with helium carrier gas at 40 mL/min. flow rate. Column temperature held at 150 °C for 4 min. after injection then programmed at 16 °C/min. to 310 °C. Under these conditions the retention time for Aldrin is 18.4 min.

TABLE 2—QC ACCEPTANCE CRITERIA—METHOD 611

Parameter	Test conc. (μg/L)	Limit for s (μg/L)	Range for $\bar{X}$ (μg/L)	Range for P, P_s, percent
Bis (2-chloroethyl)ether	100	26.3	26.3–136.8	11–152
Bis (2-chloroethoxy)methane	100	25.7	27.3–115.0	12–128
Bis (2-chloroisopropyl)ether	100	32.7	26.4–147.0	9–165
4-Bromophenyl phenyl ether	100	39.3	7.6–167.5	D–189
4-Chlorophenyl phenyl ether	100	30.7	15.4–152.5	D–170

s = Standard deviation of four recovery measurements, in μg/L (Section 8.2.4).
$\bar{X}$ = Average recovery for four recovery measurements, in μg/L (Section 8.2.4).
P, P_s = Percent recovery measured (Section 8.3.2, Section 8.4.2).
D = Detected; result must be greater than zero.

NOTE: These criteria are based directly upon the method performance data in Table 3. Where necessary, the limits for recovery have been broadened to assure applicability of the limits to concentrations below those used to develop Table 3.

TABLE 3—METHOD ACCURACY AND PRECISION AS FUNCTIONS OF CONCENTRATION—METHOD 611

Parameter	Accuracy, as recovery, X′ (μg/L)	Single analyst precision, s_r' (μg/L)	Overall precision, S′ (μg/L)
Bis(2-chloroethyl) ether	0.81C + 0.54	$0.19\bar{X} + 0.28$	$0.35\bar{X} + 0{,}36$
Bis(2-chloroethoxy) methane	0.71C + 0.13	$0.20\bar{X} + 0.15$	$0.33\bar{X} + 0.11$
Bis(2-chloroisopropyl) ether	0.85C + 1.67	$0.20\bar{X} + 1.05$	$0.36\bar{X} + 0.79$
4–Bromophenyl phenyl ether	0.85C + 2.55	$0.25\bar{X} + 0.21$	$0.47\bar{X} + 0.37$

TABLE 3—METHOD ACCURACY AND PRECISION AS FUNCTIONS OF CONCENTRATION—METHOD 611—Continued

Parameter	Accuracy, as recovery, X′ (μg/L)	Single analyst precision, s_r' (μg/L)	Overall precision, S′ (μg/L)
4–Chlorophenyl phenyl ether	0.82C + 1.97	0.18$\bar{X}$ + 2.13	0.41$\bar{X}$ + 0.55

X′ = Expected recovery for one or more measuremelts of a sample containing a concentration of C, in μg/L.
s_r' = Expected single analyst standard deviation of measurements at an average concentration found of $\bar{X}$, in μg/L.
S′ = Expected interlaboratory standard deviation of measurements at an average concentration found of $\bar{X}$, in μg/L.
C = True value for the concentration, in μg/L.
$\bar{X}$ = Average recovery found for measurements of samples containing a concentration of C, in μg/L.

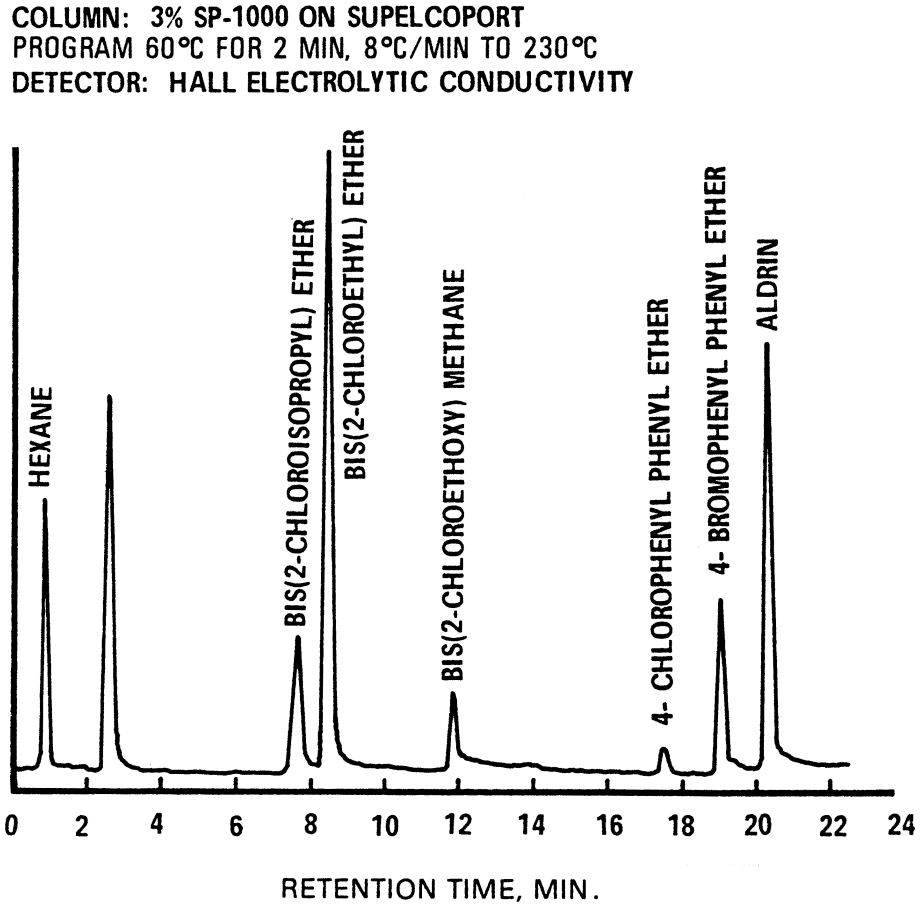

Figure 1. Gas chromatogram of haloethers.

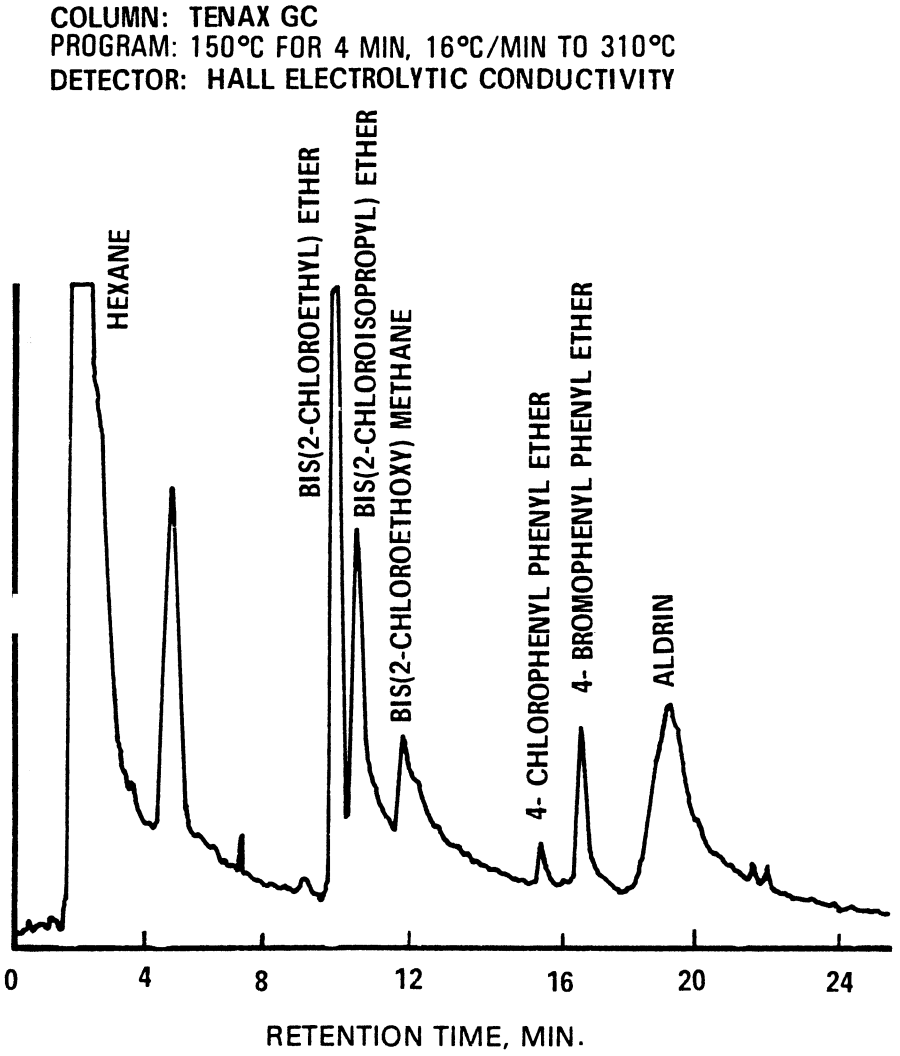

Figure 2. Gas chromatogram of haloethers.

METHOD 612—CHLORINATED HYDROCARBONS

1. Scope and Application

1.1 This method covers the determination of certain chlorinated hydrocarbons. The following parameters can be determined by this method:

Parameter	STORET No.	CAS No.
2-Chloronaphthalene	34581	91–58–7
1,2-Dichlorobenzene	34536	95–50–1
1,3-Dichlorobenzene	34566	541–73–1
1,4-Dichlorobenzene	34571	106–46–7
Hexachlorobenzene	39700	118–74–1
Hexachlorobutadiene	34391	87–68–3
Hexachlorocyclopentadiene	34386	77–47–4
Hexachloroethane	34396	67–72–1

Parameter	STORET No.	CAS No.
1,2,4-Trichlorobenzene	34551	120–82–1

1.2 This is a gas chromatographic (GC) method applicable to the determination of the compounds listed above in municipal and industrial discharges as provided under 40 CFR 136.1. When this method is used to analyze unfamiliar samples for any or all of the compounds above, compound identifications should be supported by at least one additional qualitative technique. This method describes a second gas chromatographic column that can be used to confirm measurements made with the primary column. Method 625 provides gas chromatograph/mass spectrometer (GC/MS) conditions appropriate for the qualitative and quantitative confirmation of results for all of the parameters listed above, using the extract produced by this method.

1.3 The method detection limit (MDL, defined in Section 14.1)[1] for each parameter is listed in Table 1. The MDL for a specific wastewater may differ from those listed, depending upon the nature of interferences in the sample matrix.

1.4 The sample extraction and concentration steps in this method are essentially the same as in Methods 606, 608, 609, and 611. Thus, a single sample may be extracted to measure the parameters included in the scope of each of these methods. When cleanup is required, the concentration levels must be high enough to permit selecting aliquots, as necessary, to apply appropriate cleanup procedures. The analyst is allowed the latitude, under Section 12, to select chromatographic conditions appropriate for the simultaneous measurement of combinations of these parameters.

1.5 Any modification of this method, beyond those expressly permitted, shall be considered as a major modification subject to application and approval of alternate test procedures under 40 CFR 136.4 and 136.5.

1.6 This method is restricted to use by or under the supervision of analysts experienced in the use of a gas chromatograph and in the interpretation of gas chromatograms. Each analyst must demonstrate the ability to generate acceptable results with this method using the procedure described in Section 8.2.

2. Summary of Method

2.1 A measured volume of sample, approximately 1–L, is extracted with methylene chloride using a separatory funnel. The methylene chloride extract is dried and exchanged to hexane during concentration to a volume of 10 mL or less. The extract is separated by gas chromatography and the parameters are then measured with an electron capture detector.[2]

2.2 The method provides a Florisil column cleanup procedure to aid in the elimination of interferences that may be encountered.

3. Interferences

3.1 Method interferences may be caused by contaminants in solvents, reagents, glassware, and other sample processing hardware that lead to discrete artifacts and/or elevated baselines in gas chromatograms. All of these materials must be routinely demonstrated to be free from interferences under the conditions of the analysis by running laboratory reagent blanks as described in Section 8.1.3.

3.1.1 Glassware must be scrupulously cleaned.[3] Clean all glassware as soon as possible after use by rinsing with the last solvent used in it. Solvent rinsing should be followed by detergent washing with hot water, and rinses with tap water and distilled water. The glassware should then be drained dry, and heated in a muffle furnace at 400 °C for 15 to 30 min. Some thermally stable materials, such as PCBs, may not be eliminated by this treatment. Solvent rinses with acetone and pesticide quality hexane may be substituted for the muffle furnace heating. Thorough rinsing with such solvents usually eliminates PCB interference. Volumetric ware should not be heated in a muffle furnace. After drying and cooling, glassware should be sealed and stored in a clean environment to prevent any accumulation of dust or other contaminants. Store inverted or capped with aluminum foil.

3.1.2 The use of high purity reagents and solvents helps to minimize interference problems. Purification of solvents by distillation in all-glass systems may be required.

3.2 Matrix interferences may be caused by contaminants that are co-extracted from the sample. The extent of matrix interferences will vary considerably from source to source, depending upon the nature and diversity of the industrial complex or municipality being sampled. The cleanup procedure in Section 11 can be used to overcome many of these interferences, but unique samples may require additional cleanup approaches to achieve the MDL listed in Table 1.

4. Safety

4.1 The toxicity or carcinogenicity of each reagent used in this method has not been precisely defined; however, each chemical compound should be treated as a potential health hazard. From this viewpoint, exposure to these chemicals must be reduced to the lowest possible level by whatever means available. The laboratory is responsible for maintaining a current awareness file of OSHA regulations regarding the safe handling of the chemicals specified in this method. A reference file of material data handling sheets should also be made available to all

personnel involved in the chemical analysis. Additional references to laboratory safety are available and have been identified[4M6] for the information of the analyst.

5. Apparatus and Materials

5.1 Sampling equipment, for discrete or composite sampling.

5.1.1 Grab sample bottle—1cL or 1-qt, amber glass, fitted with a screw cap lined with Teflon. Foil may be substituted for Teflon if the sample is not corrosive. If amber bottles are not available, protect samples from light. The bottle and cap liner must be washed, rinsed with acetone or methylene chloride, and dried before use to minimize contamination.

5.1.2 Automatic sampler (optional)—The sampler must incorporate glass sample containers for the collection of a minimum of 250 mL of sample. Sample containers must be kept refrigerated at 4 °C and protected from light during compositing. If the sampler uses a peristaltic pump, a minimum length of compressible silicone rubber tubing may be used. Before use, however, the compressible tubing should be thoroughly rinsed with methanol, followed by repeated rinsings with distilled water to minimize the potential for contamination of the sample. An integrating flow meter is required to collect flow proportional composites.

5.2 Glassware (All specifications are suggested. Catalog numbers are included for illustration only.):

5.2.1 Separatory funnel—2–L, with Teflon stopcock.

5.2.2 Drying column—Chromatographic column, approximately 400 mm long × 19 mm ID, with coarse frit filter disc.

5.2.3 Chromatographic column—300 long × 10 mm ID, with Teflon stopcock and coarse frit filter disc at bottom.

5.2.4 Concentrator tube, Kuderna-Danish—10-mL, graduated (Kontes K–570050–1025 or equivalent). Calibration must be checked at the volumes employed in the test. Ground glass stopper is used to prevent evaporation of extracts.

5.2.5 Evaporative flask, Kuderna-Danish—500-mL (Kontes K–570001–0500 or equivalent). Attach to concentrator tube with springs.

5.2.6 Snyder column, Kuderna-Danish—Three-ball macro (Kontes K–503000–0121 or equivalent).

5.2.7 Vials—10 to 15-mL, amber glass, with Teflon-lined screw cap.

5.3 Boiling chips—Approximately 10/40 mesh. Heat to 400 °C for 30 min or Soxhlet extract with methylene chloride.

5.4 Water bath—Heated, with concentric ring cover, capable of temperature control (±2 °C). The bath should be used in a hood.

5.5 Balance—Analytical, capable of accurately weighing 0.0001 g.

5.6 Gas chromatograph—An analytical system complete with gas chromatograph suitable for on-column injection and all required accessories including syringes, analytical columns, gases, detector, and strip-chart recorder. A data system is recommended for measuring peak areas.

5.6.1 Column 1—1.8 m long × 2 mm ID glass, packed with 1% SP–1000 on Supelcoport (100/120 mesh) or equivalent. Guidelines for the use of alternate column packings are provide in Section 12.1.

5.6.2 Column 2—1.8 m long × 2 mm ID glass, packed with 1.5% OV–1/2.4% OV–225 on Supelcoport (80/100 mesh) or equivalent. This column was used to develop the method performance statements in Section 14.

5.6.3 Detector—Electron capture detector. This detector has proven effective in the analysis of wastewaters for the parameters listed in the scope (Section 1.1), and was used to develop the method performance statements in Section 14. Guidelines for the use of alternate detectors are provided in Section 12.1.

6. Reagents

6.1 Reagent water—Reagent water is defined as a water in which an interferent is not observed at the MDL of the parameters of interest.

6.2 Acetone, hexane, isooctane, methanol, methylene chloride, petroleum ether (boiling range 30 to 60 °C)—Pesticide quality or equivalent.

6.3 Sodium sulfate—(ACS) Granular, anhydrous. Purify heating at 400 °C for 4 h in a shallow tray.

6.4 Florisil—PR grade (60/100 mesh). Purchase activated at 1250 °F and store in the dark in glass containers with ground glass stoppers or foil-lined screw caps. Before use, activate each batch at least 16 h at 130 °C in a foil-covered glass container and allow to cool.

6.5 Stock standard solution (1.00 μg/μL)—Stock standard solutions can be prepared from pure standard materials or purchased as certified solutions.

6.5.1 Prepare stock standard solutions by accurately weighing about 0.0100 g of pure material. Dissolve the material in isooctane and dilute to volume in a 120-mL volumetric flask. Larger volumes can be used at the convenience of the analyst. When compound purity is assayed to be 96% or greater, the weight can be used without correction to calculate the concentration of the stock standard. Commercially prepared stock standards can be used at any concentration if they are certified by the manufacturer or by an independent source.

6.5.2 Transfer the stock standard solutions into Teflon-sealed screw-cap bottles. Store at 4 °C and protect from light. Stock standard solutions should be checked frequently for signs of degradation or evaporation, especially just prior to preparing calibration standards from them.

6.5.3 Stock standard solutions must be replaced after six months, or sooner if comparision with check standards indicates a problem.

6.6 Quality control check sample concentrate—See Section 8.2.1.

7. Calibration

7.1 Establish gas chromatographic operating conditions equivalent to those given in Table 1. The gas chromatographic system can be calibrated using the external standard technique (Section 7.2) or the internal standard technique (Section 7.3).

7.2 External standard calibration procedure:

7.2.1 Prepare calibration standards at a minimum of three concentration levels for each parameter of interest by adding volumes of one or more stock standards to a volumetric flask and diluting to volume with isooctane. One of the external standards should be at a concentration near, but above, the MDL (Table 1) and the other concentrations should correspond to the expected range of concentrations found in real samples or should define the working range of the detector.

7.2.2 Using injections of 2 to 5 µL, analyze each calibration standard according to Section 12 and tabulate peak height or area responses against the mass injected. The results can be used to prepare a calibration curve for each compound. Alternatively, if the ratio of response to amount injected (calibration factor) is a constant over the working range (<10% relative standard deviation, RSD), linearity through the origin can be assumed and the average ratio or calibration factor can be used in place of a calibration curve.

7.3 Internal standard calibration procedure—To use this approach, the analyst must select one or more internal standards that are similar in analytical behavior to the compounds of interest. The analyst must further demonstrate that the measurement of the internal standard is not affected by method or matrix interferences. Because of these limitations, no internal standard can be suggested that is applicable to all samples.

7.3.1 Prepare calibration standards at a minimum of three concentration levels for each parameter of interest by adding volumes of one or more stock standards to a volumetric flask. To each calibration standard, add a known constant amount of one or more internal standards, and dilute to volume with isooctane. One of the standards should be at a concentration near, but above, the MDL and the other concentrations should correspond to the expected range of concentrations found in real samples or should define the working range of the detector.

7.3.2 Using injections of 2 to 5 µL, analyze each calibration standard according to Section 12 and tabulate peak height or area responses against concentration for each compound and internal standard. Calculate response factors (RF) for each compound using Equation 1.

$$RF = \frac{(A_s)(C_{is})}{(A_{is})(C_s)}$$

Equation 1

where:

A_s = Response for the parameter to be measured.

A_{is} = Response for the internal standard.

C_{is} = Concentration of the internal standard (µg/L).

C_s = Concentration of the parameter to be measured (µg/L).

If the RF value over the working range is a constant (<10% RSD), the RF can be assumed to be invariant and the average RF can be used for calculations. Alternatively, the results can be used to plot a calibration curve of response ratios, A_s/A_{is}, vs. RF.

7.4 The working calibration curve, calibration factor, or RF must be verified on each working day by the measurement of one or more calibration standards. If the response for any parameter varies from the predicted response by more than ±15%, a new calibration curve must be prepared for that compound.

7.5 Before using any cleanup procedure, the analyst must process a series of calibration standards through the procedure to validate elution patterns and the absence of interferences from the reagents.

8. Quality Control

8.1 Each laboratory that uses this method is required to operate a formal quality control program. The minimum requirements of this program consist of an initial demonstration of laboratory capability and an ongoing analysis of spiked samples to evaluate and document data quality. The laboratory must maintain records to document the quality of data that is generated. Ongoing data quality checks are compared with established performance criteria to determine if the results of analyses meet the performance characteristics of the method. When the results of sample spikes indicate atypical method performance, a quality control check standard must be analyzed to confirm that the measurements were performed in an in-control mode of operation.

8.1.1 The analyst must make an initial, one-time, demonstration of the ability to generate acceptable accuracy and precision with this method. This ability is established as described in Section 8.2.

8.1.2 In recognition of advances that are occurring in chromatography, the analyst is permitted certain options (detailed in Sections 10.4, 11.1, and 12.1) to improve the separations or lower the cost of measurements. Each time such modification is made to the method, the analyst is required to repeat the procedure in Section 8.2.

8.1.3 Before processing any samples, the analyst must analyze a reagent water blank to demonstrate that interferences from the analytical system and glassware are under control. Each time a set of samples is extracted or reagents are changed, a reagent water blank must be processed as a safeguard against laboratory contamination.

8.1.4 The laboratory must, on an ongoing basis, spike and analyze a minimum of 10% of all samples to monitor and evaluate laboratory data quality. This procedure is described in Section 8.3.

8.1.5 The laboratory must, on an ongoing basis, demonstrate through the analyses of quality control check standards that the operation of the measurement system is in control. This procedure is described in Section 8.4. The frequency of the check standard analyses is equivalent to 10% of all samples analyzed but may be reduced if spike recoveries from samples (Section 8.3) meet all specified quality control criteria.

8.1.6 The laboratory must maintain performance records to document the quality of data that is generated. This procedure is described in Section 8.5.

8.2 To establish the ability to generate acceptable accuracy and precision, the analyst must perform the following operations.

8.2.1 A quality control (QC) check sample concentrate is required containing each parameter of interest at the following concentrations in acetone: Hexachloro-substituted parameters, 10 µg/mL; any other chlorinated hydrocarbon, 100 µg/mL. The QC check sample concentrate must be obtained from the U.S. Environmental Protection Agency, Environmental Monitoring and Support Laboratory in Cincinnati, Ohio, if available. If not available from that source, the QC check sample concentrate must be obtained from another external source. If not available from either source above, the QC check sample concentrate must be prepared by the laboratory using stock standards prepared independently from those used for calibration.

8.2.2 Using a pipet, prepare QC check samples at the test concentrations shown in Table 2 by adding 1.00 mL of QC check sample concentrate to each of four 1–L aliquots of reagent water.

8.2.3 Analyze the well-mixed QC check samples according to the method beginning in Section 10.

8.2.4 Calculate the average recovery ($\bar{X}$) in µg/L, and the standard deviation of the recovery (s) in µg/L, for each parameter using the four results.

8.2.5 For each parameter compare s and $\bar{X}$ with the corresponding acceptance criteria for precision and accuracy, respectively, found in Table 2. If s and $\bar{X}$ for all parameters of interest meet the acceptance criteria, the system performance is acceptable and analysis of actual samples can begin. If any individual s exceeds the precision limit or any individual $\bar{X}$ falls outside the range for accuracy, the system performance is unacceptable for that parameter.

NOTE: The large number of parameters in Table 2 presents a substantial probability that one or more will fail at least one of the acceptance criteria when all parameters are analyzed.

8.2.6 When one or more of the parameters tested fail at least one of the acceptance criteria, the analyst must proceed according to Section 8.2.6.1 or 8.2.6.2.

8.2.6.1 Locate and correct the source of the problem and repeat the test for all parameters of interest beginning with Section 8.2.2.

8.2.6.2 Beginning with Section 8.2.2, repeat the test only for those parameters that failed to meet criteria. Repeated failure, however, will confirm a general problem with the measurement system. If this occurs, locate and correct the source of the problem and repeat the test for all compounds of interest beginning with Section 8.2.2.

8.3 The laboratory must, on an ongoing basis, spike at least 10% of the samples from each sample site being monitored to assess accuracy. For laboratories analyzing one to ten samples per month, at least one spike sample per month is required.

8.3.1 The concentration of the spike in the sample should be determined as follows:

8.3.1.1 If, as in compliance monitoring, the concentration of a specific parameter in the sample is being checked against a regulatory concentration limit, the spike should be at that limit or 1 to 5 times higher than the background concentration determined in Section 8.3.2, whichever concentration would be larger.

8.3.1.2 If the concentration of a specific parameter in the sample is not being checked against a limit specific to that parameter, the spike should be at the test concentration in Section 8.2.2 or 1 to 5 times higher than the background concentration determined in Section 8.3.2, whichever concentration would be larger.

8.3.1.3 If it is impractical to determine background levels before spiking (e.g., maximum holding times will be exceeded), the spike concentration should be (1) the regulatory concentration limit, if any; or, if none by (2) the larger of either 5 times higher than the expected background concentration or the test concentration in Section 8.2.2.

8.3.2 Analyze one sample aliquot to determine the background concentration (B) of each parameter. In necessary, prepare a new QC check sample concentrate (Section 8.2.1) appropriate for the background concentrations in the sample. Spike a second sample aliquot with 1.0 mL of the QC check sample concentrate and analyze it to determine the concentration after spiking (A) of each parameter. Calculate each percent recovery (P) as 100 (A − B)%/T, where T is the known true value of the spike.

8.3.3 Compare the percent recovery (P) for each parameter with the corresponding QC acceptance criteria found in Table 2. These acceptance criteria were calculated to include an allowance for error in measurement of both the background and spike concentrations, assuming a spike to background ratio of 5:1. This error will be accounted for to the extent that the analyst's spike to background ratio approaches 5:1.[7] If spiking was performed at a concentration lower than the test concentration in Section 8.2.2, the analyst must use either the QC acceptance criteria in Table 2, or optional QC acceptance criteria calculated for the specific spike concentration. To calculate optional acceptance criteria for the recovery of a parameter: (1) Calculate accuracy (X′) using the equation in Table 3, substituting the spike concentration (T) for C; (2) calculate overall precision (S′) using the equation in Table 3, substituting X′ for $\bar{X}$; (3) calculate the range for recovery at the spike concentration as (100 X′/T) ±2.44 (100 S′/T)%.[7]

8.3.4 If any individual P falls outside the designated range for recovery, that parameter has failed the acceptance criteria. A check standard containing each parameter that failed the criteria must be analyzed as described in Section 8.4.

8.4. If any parameter fails the acceptance criteria for recovery in Section 8.3, a QC check standard containing each parameter that failed must be prepared and analyzed.

NOTE: The frequency for the required analysis of a QC check standard will depend upon the number of parameters being simultaneously tested, the complexity of the sample matrix, and the performance of the laboratory.

8.4.1 Prepare the QC check standard by adding 1.0 mL of QC check sample concentrate (Sections 8.2.1 or 8.3.2) to 1 L of reagent water. The QC check standard needs only to contain the parameters that failed criteria in the test in Section 8.3.

8.4.2 Analyze the QC check standard to determine the concentration measured (A) of each parameter. Calculate each percent recovery (P_s) as 100 (A/T)%, where T is the true value of the standard concentration.

8.4.3 Compare the percent recovery (P_s) for each parameter with the corresponding QC acceptance criteria found in Table 2. Only parameters that failed the test in Section 8.3 need to be compared with these criteria. If the recovery of any such parameter falls outside the designated range, the laboratory performance for that parameter is judged to be out of control, and the problem must be immediately identified and corrected. The analytical result for that parameter in the unspiked sample is suspect and may not be reported for regulatory compliance purposes.

8.5 As part of the QC program for the laboratory, method accuracy for wastewater samples must be assessed and records must be maintained. After the analysis of five spiked wastewater samples as in Section 8.3, calculate the average percent recovery ($\bar{P}$) and the standard deviation of the percent recovery (s_p). Express the accuracy assessment as a percent recovery interval from $P - 2s_p$ to $P + 2s_p$. If P = 90% and s_p = 10%, for example, the accuracy interval is expressed as 70–110%. Update the accuracy assessment for each parameter on a regular basis (e.g. after each five to ten new accuracy measurements).

8.6 It is recommended that the laboratory adopt additional quality assurance practices for use with this method. The specific practices that are most productive depend upon the needs of the laboratory and the nature of the samples. Field duplicates may be analyzed to assess the precision of the environmental measurements. When doubt exists over the identification of a peak on the chromatogram, confirmatory techniques such as gas chromatography with a dissimilar column, specific element detector, or mass spectrometer must be used. Whenever possible, the laboratory should analyze standard reference materials and participate in relevent performance evaluation studies.

9. Sample Collection, Preservation, and Handling

9.1 Grab samples must be collected in glass containers. Conventional sampling practices[8] should be followed, except that the bottle must not be prerinsed with sample before collection. Composite samples should be collected in refrigerated glass containers in accordance with the requirements of the program. Automatic sampling equipment must be as free as possible of Tygon tubing and other potential sources of contamination.

9.2 All samples must be iced or refrigerated at 4 °C from the time of collection until extraction.

9.3 All samples must be extracted within 7 days of collection and completely analyzed within 40 days of extraction.[2]

10. Sample Extraction

10.1 Mark the water meniscus on the side of the sample bottle for later determination of sample volume. Pour the entire sample into a 2–L separatory funnel.

10.2 Add 60 mL of methylele chloride to the sample bottle, seal, and shake 30 s to rinse the inner surface. Transfer the solvent to the separatory funnel and extract the sample by shaking the funnel for 2 min with periodic venting to release excess pressure. Allow the organic layer to separate from the water phase for a minimum of 10 min. If the emulsion interface between layers is more than one-third the volume of the solvent layer, the analyst must employ mechanical techniques to complete the phase separation. The optimum technique depends upon the sample, but may include stirring, filtration of the emulsion through glass wool, centrifugation, or other physical methods. Collect the methylene chloride extract in a 250-mL Erlenmeyer flask.

10.3 Add a second 60-mL volume of methylene chloride to the sample bottle and repeat the extraction procedure a second time, combining the extracts in the Erlenmeyer flask. Perform a third extraction in the same manner.

10.4 Assemble a Kuderna-Danish (K-D) concentrator by attaching a 10-mL concentrator tube to a 500-mL evaporative flask. Other concentration devices or techniques may be used in place of the K-D concentrator if the requirements of Section 8.2 are met.

10.5 Pour the combined extract through a solvent-rinsed drying column containing about 10 cm of anhydrous sodium sulfate, and collect the extract in the K-D concentrator. Rinse the Erlenmeyer flask and column with 20 to 30 mL of methylene chloride to complete the quantitative transfer.

10.6 Add one or two clean boiling chips to the evaporative flask and attach a three-ball Snyder column. Prewet the Snyder column by adding about 1 mL of methylene chloride to the top. Place the K-D apparatus on a hot water bath (60 to 65 °C) so that the concentrator tube is partially immersed in the hot water, and the entire lower rounded surface of the flask is bathed with hot vapor. Adjust the vertical position of the apparatus and the water temperature as required to complete the concentration in 15 to 20 min. At the proper rate of distillation the balls of the column will actively chatter but the chambers will not flood with condensed solvent. When the apparent volume of liquid reaches 1 to 2 mL, remove the K-D apparatus and allow it to drain and cool for at least 10 min.

NOTE: The dichloribenzenes have a sufficiently high volatility that significant losses may occur in concentration steps if care is not exercised. It is important to maintain a constant gentle evaporation rate and not to allow the liquid volume to fall below 1 to 2 mL before removing the K-D apparatus from the hot water bath.

10.7 Momentarily remove the Snyder column, add 50 mL of hexane and a new boiling chip, and reattach the Snyder column. Raise the tempeature of the water bath to 85 to 90 °C. Concentrate the extract as in Section 10.6, except use hexane to prewet the column. The elapsed time of concentration should be 5 to 10 min.

10.8 Romove the Snyder column and rinse the flask and its lower joint into the concentrator tube with 1 to 2 mL of hexane. A 5-mL syringe is recommended for this operation. Stopper the concentrator tube and store refrigerated if further processing will not be performed immediately. If the extract will be stored longer than two days, it should be transferred to a Teflon-sealed screw-cap vial. If the sample extract requires no further cleanup, proceed with gas chromatographic analysis (Section 12). If the sample requires further cleanup, proceed to Section 11.

10.9 Determine the original sample volume by refilling the sample bottle to the mark and transferring the liquid to a 1000-mL graduated cylinder. Record the sample volume to the nearest 5 mL.

11. Cleanup and Separation

11.1 Cleanup procedures may not be necessary for a relatively clean sample matrix. If particular circumstances demand the use of a cleanup procedure, the analyst may use the procedure below or any other appropriate procedure. However, the analyst first must demonstrate that the requirements of Section 8.2 can be met using the method as revised to incorporate the cleanup procedure.

11.2 Florisil column cleanup for chlorinated hydrocarbons:

11.2.1 Adjust the sample extract to 10 mL with hexane.

11.2.2 Place 12 g of Florisil into a chromatographic column. Tap the column to settle the Florisil and add 1 to 2 cm of anhydrous sodium sulfate to the top.

11.2.3 Preelute the column with 100 mL of petroleum ether. Discard the eluate and just prior to exposure of the sodium sulfate layer to the air, quantitatively transfer the sample extract onto the column by decantation and subsequent petroleum ether washings. Discard the eluate. Just prior to exposure of the sodium sulfate layer to the air, begin eluting the column with 200 mL of petroleum ether and collect the eluate in a 500-mL K-D flask equipped with a 10-mL concentrator tube. This fraction should contain all of the chlorinated hydrocarbons.

11.2.4 Concentrate the fraction as in Section 10.6, except use hexane to prewet the column. When the apparatus is cool, remove the Snyder column and rinse the flask and its lower joint into the concentrator tube with hexane. Analyze by gas chromatography (Section 12).

12. Gas Chromatography

12.1 Table 1 summarizes the recommended operating conditions for the gas chromatograph. Included in this table are retention times and MDL that can be achieved under these conditions. Examples of the separations achieved by Columl 2 are shown in Figures 1 and 2. Other packed or capillary (open-tubular) columns, chromatographic conditions, or detectors may be used if the requirements of Section 8.2 are met.

12.2 Calibrate the system daily as described in Section 7.

12.3 If the internal standard calibration procedure is being used, the internal standard must be added to the sample extract and mixed throughly immediately before injection into the gas chromatograph.

12.4 Inject 2 to 5 µL of the sample extract or standard into the gas chromatograph using the solvent-flush techlique.[9] Smaller (1.0 µL) volumes may be injected if automatic devices are employed. Record the volume injected to the nearest 0.05 µL, the total extract volume, and the resulting peak size in area or peak height units.

12.5 Identify the parameters in the sample by comparing the retention times of the peaks in the sample chromatogram with those of the peaks in standard chromatograms. The width of the retention time window used to make identifications should be based upon measurements of actual retention time variations of standards over the course of a day. Three times the standard deviation of a retention time for a compound can be used to calculate a suggested window size; however, the experience of the analyst should weigh heavily in the interpretation of chromatograms.

12.6 If the response for a peak exceeds the working range of the system, dilute the extract and reanalyze.

12.7 If the measurement of the peak response is prevented by the presence of interferences, further cleanup is required.

13. Calculations

13.1 Determine the concentration of individual compounds in the sample.

13.1.1 If the external standard calibration procedure is used, calculate the amount of material injected from the peak response using the calibration curve or calibration factor determined in Section 7.2.2. The concentration in the sample can be calculated from Equation 2.

$$\text{Concentration } (\mu g/L) = \frac{(A)(V_t)}{(V_i)(V_s)}$$

Equation 2

where:

A = Amount of material injected (ng).

V_i = Volume of extract injected (µL).

V_t = Volume of total extract (µL).

V_s = Volume of water extracted (mL).

13.1.2 If the internal standard calibration procedure is used, calculate the concentration in the sample using the response factor (RF) determined in Section 7.3.2 and Equation 3.

$$\text{Concentration } (\mu g/L) = \frac{(A_s)(I_s)}{(A_{is})(RF)(V_o)}$$

Equation 3

where:

A_s = Response for the parameter to be measured.

A_{is} = Response for the internal standard.

I_s = Amount of internal standard added to each extract (µg).

V_o = Volume of water extracted (L).

13.2 Report results in µg/L without correction for recovery data. All QC data obtained should be reported with the sample results.

14. Method Performance

14.1 The method detection limit (MDL) is defined as the minimum concentration of a substance that can be measured and reported with 99% confidence that the value is above zero.[1] The MDL concentrations listed in Table 1 were obtained using reagent water.[10] Similar results were achieved using representative wastewaters. The MDL actually achieved in a given analysis will vary depending on instrument sensitivity and matrix effects.

14.2 This method has been tested for linearity of spike recovery from reagent water and has been demonstrated to be applicable over the concentration range from 4 × MDL to 1000 × MDL.[10]

14.3 This method was tested by 20 laboratories using reagent water, drinking water, surface water, and three industrial wastewaters spiked at six concentrations over the range 1.0 to 356 µg/L.[11] Single operator precision, overall precision, and method accuracy were found to be directly related to the concentration of the parameter and essentially independent of the sample matrix. Linear equations to describe these relationships are presented in Table 3.

REFERENCES

1. 40 CFR part 136, appendix B.

2. ''Determination of Chlorinated Hydrocarbons In Industrial and Municipal Wastewaters, ''EPA 6090/4–84–ABC, National Technical Information Service, PBXYZ, Springfield, Virginia, 22161 November 1984.

3. ASTM Annual Book of Standards, Part 31, D3694–78. ''Standard Practices for Preparation of Sample Containers and for Preservation of Organic Constituents,'' American

Society for Testing and Materials, Philadelphia.

4. ''Carcinogens—Working With Carcinogens,'' Department of Health, Education, and Welfare, Public Health Service, Center for Disease Control, National Institute for Occupational Safety and Health, Publication No. 77–206, August 1977.

5. ''OSHA Safety and Health Standards, General Industry,'' (29 CFR part 1910), Occupational Safety and Health Administration, OSHA 2206 (Revised, January 1976).

6. ''Safety in Academic Chemistry Laboratories,'' American Chemical Society Publication, Committee on Chemical Safety, 3rd Edition, 1979.

7. Provost, L.P., and Elder, R.S. ''Interpretation of Percent Recovery Data,''*American Laboratory*, *15*, 58–63 (1983). (The value 2.44 used in the equation in Section 8.3.3 is two times the value 1.22 derived in this report.)

8. ASTM Annual Book of Standards, Part 31, D3370–76. ''Standard Practices for Sampling Water,'' American Society for Testing and Materials, Philadelphia.

9. Burke, J.A. ''Gas Chromatography for Pesticide Residue Analysis; Some Practical Aspects,'' *Journal of the Association of Official Analytical Chemists*, *48*, 1037 (1965).

10. ''Development of Detection Limits, EPA Method 612, Chlorinated Hydrocarbons,'' Special letter report for EPA Contract 68–03–2625, U.S. Environmental Protection Agency, Environmental Monitoring and Support Laboratory, Cincinnati, Ohio 45268.

11. ''EPA Method Study Method 612—Chlorinated Hydrocarbons,'' EPA 600/4–84–039, National Technical Information Service, PB84–187772, Springfield, Virginia 22161, May 1984.

12. ''Method Performance for Hexachlorocyclopentadiene by Method 612,'' Memorandum from R. Slater, U.S. Environmental Protection Agency, Environmental Monitoring and Support Laboratory, Cincinnati, Ohio 45268, December 7, 1983.

TABLE 1—CHROMATOGRAPHIC CONDITIONS AND METHOD DETECTION LIMITS

Parameter	Retention time (min)		Method detection limit (µg/L)
	Column 1	Column 2	
1,3-Dichlorobenzene	4.5	6.8	1.19
Hexachloroethane	4.9	8.3	0.03
1,4-Dichlorobenzene	5.2	7.6	1.34
1,2-Dichlorobenzene	6.6	9.3	1.14
Hexachlorobutadiene	7.7	20.0	0.34
1,2,4-Trichlorobenzene	15.5	22.3	0.05
Hexachlorocyclopentadiene	nd	[c] 16.5	0.40
2-Chloronaphthalene	[a] 2.7	[b] 3.6	0.94
Hexachlorobenzene	[a] 5.6	[b] 10.1	0.05

Column 1 conditions: Supelcoport (100/120 mesh) coated with 1% SP–1000 packed in a 1.8 m × 2 mm ID glass column with 5% methane/95% argon carrier gas at 25 mL/min. flow rate. Column temperature held isothermal at 65 °C, except where otherwise indicated.

Column 2 conditions: Supelcoport (80/100 mesh) coated with 1.5% OV–1/2.4% OV–225 packed in a 1.8 m × 2 mm ID glass column with 5% methane/95% argon carrier gas at 25 mL/min. flow rate. Column temperature held isothermal at 75 °C, except where otherwise indicated.

nd = Not determined.

[a] 150 °C column temperature.

[b] 165 °C column temperature.

[c] 100 °C column temperature.

TABLE 2—QC ACCEPTANCE CRITERIA—METHOD 612

Parameter	Test conc. (µg/L)	Limit for s (µg/L)	Range for $\bar{X}$ (µg/L)	Range for P, P_s (percent)
2-Chloronaphthalene	100	37.3	29.5–126.9	9–148
1,2-Dichlorobenzene	100	28.3	23.5–145.1	9–160
1,3-Dichlorobenzene	100	26.4	7.2–138.6	D–150
1,4-Dichlorobenzene	100	20.8	22.7–126.9	13–137
Hexachlorobenzene	10	2.4	2.6–14.8	15–159
Hexachlorobutadiene	10	2.2	D–12.7	D–139
Hexachlorocyclopentadiene	10	2.5	D–10.4	D–111
Hexachloroethane	10	3.3	2.4–12.3	8–139
1,2,4-Trichlorobenzene	100	31.6	20.2–133.7	5–149

s = Standard deviation of four recovery measurements, in µg/L (Section 8.2.4).

$\bar{X}$ = Average recovery for four recovery measurements, in µg/L (Section 8.2.4).

P, P_s = Percent recovery measured (Section 8.3.2, Section 8.4.2).

D = Detected; result must be greater than zero.

NOTE: These criteria are based directly upon the method performance data in Table 3. Where necessary, the limits for recovery have been broadened to assure applicability of the limits to concentrations below those used to develop Table 3.

TABLE 3—METHOD ACCURACY AND PRECISION AS FUNCTIONS OF CONCENTRATION—METHOD 612

Parameter	Acccuracy, as recovery, X′ (μg/L)	Single analyst precision, s_r' (μg/L)	Overall precision, S′ (μg/L)
2-Chloronaphthalene	0.75C + 3.21	0.28$\bar{X}$ − 1.17	0.38$\bar{X}$ − 1.39
1,2-Dichlorobenzene	0.85C − 0.70	0.22$\bar{X}$ − 2.95	0.41$\bar{X}$ − 3.92
1,3-Dichlorobenzene	0.72C + 0.87	0.21$\bar{X}$ − 1.03	0.49$\bar{X}$ − 3.98
1,4-Dichlorobenzene	0.72C + 2.80	0.16$\bar{X}$ − 0.48	0.35$\bar{X}$ − 0.57
Hexachlorobenzene	0.87C − 0.02	0.14$\bar{X}$ + 0.07	0.36$\bar{X}$ − 0.19
Hexachlorobutadiene	0.61C + 0.03	0.18$\bar{X}$ + 0.08	0.53$\bar{X}$ − 0.12
Hexachlorocyclopentadiene[a]	0.47C	0.24$\bar{X}$	0.50$\bar{X}$
Hexachloroethane	0.74C − 0.02	0.23$\bar{X}$ + 0.07	0.36$\bar{X}$ − 0.00
1,2,4-Trichlorobenzene	0.76C + 0.98	0.23$\bar{X}$ − 0.44	0.40$\bar{X}$ − 1.37

X′ = Expected recovery for one or more measurements of a sample containing a concentration of C, in μg/L.
s_r' = Expected single analyst standard deviation of measurements at an average concentration found of $\bar{X}$, in μg/L.
S′ = Expected interlaboratory standard deviation of measurements at an average concentration found of $\bar{X}$, in μg/L.
C = True value for the concentration, in μg/L.
$\bar{X}$ = Average recovery found for measurements of samples containing a concentration of C, in μg/L.

[a] Estimates based upon the performance in a single laboratory.[12]

COLUMN: 1.5% OV-1/2.4% OV-225 ON SUPELCOPORT
TEMPERATURE: 75°C
DETECTOR: ELECTRON CAPTURE

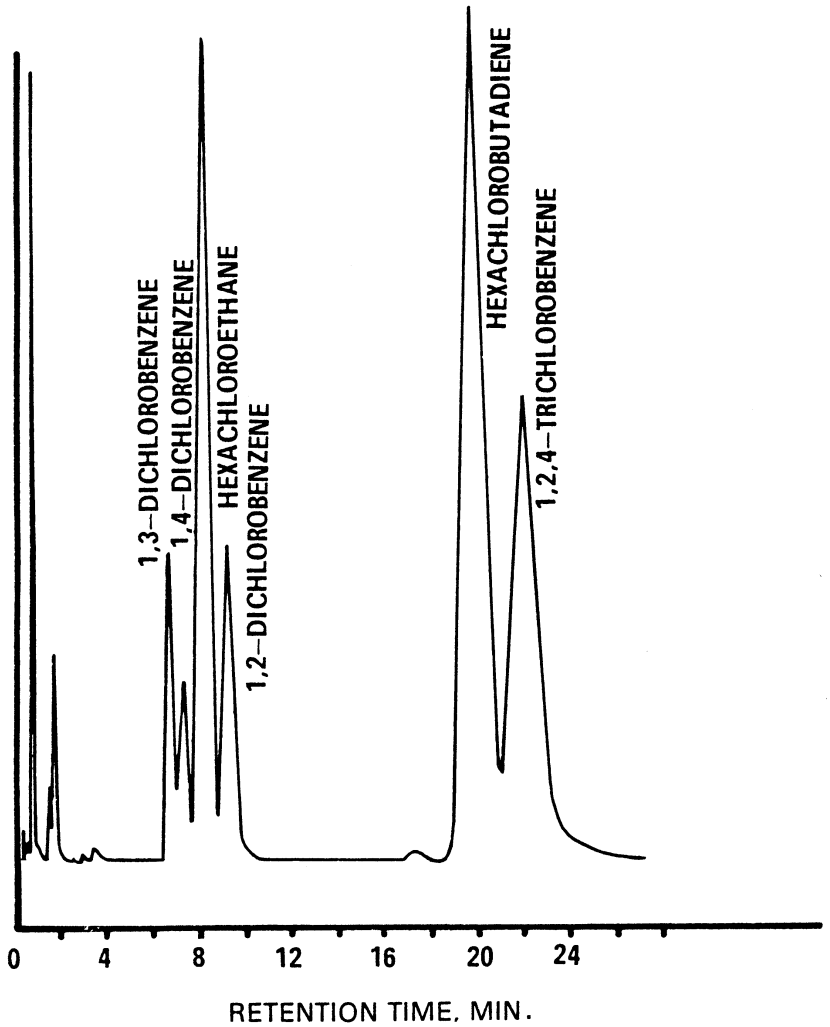

Figure 1. Gas chromatogram of chlorinated hydrocarbons.

COLUMN: 1.5% OV-1/2.4% OV-225 ON SUPELCOPORT
TEMPERATURE: 165°C
DETECTOR: ELECTRON CAPTURE

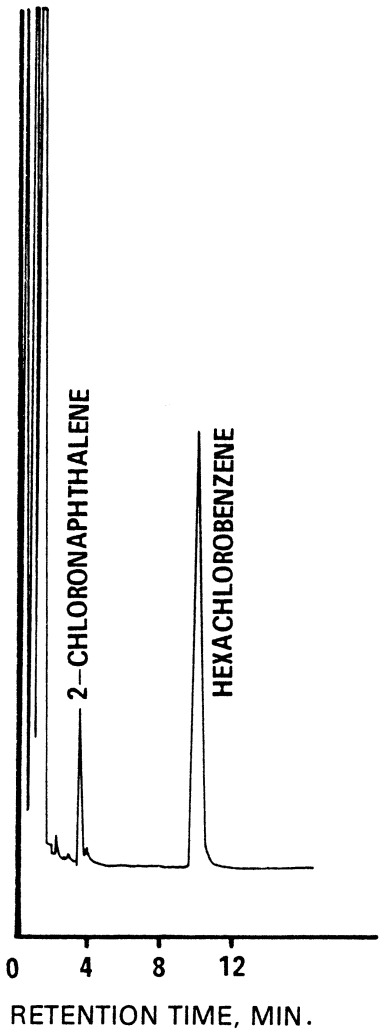

Figure 2. Gas chromatogram of chlorinated hydrocarbons.

METHOD 613—2,3,7,8-TETRACHLORODIBENZO-P-DIOXIN

1. Scope and Application

1.1 This method covers the determination of 2,3,7,8-tetrachlorodibenzo-p-dioxin (2,3,7,8-TCDD). The following parameter may be determined by this method:

Parameter	STORET No.	GAS No.
2,3,7,8-TCDD	34675	1746–01–6

1.2 This is a gas chromatographic/mass spectrometer (GC/MS) method applicable to the determination of 2,3,7,8–TCDD in municipal and industrial discharges as provided under 40 CFR 136.1. Method 625 may be used to screen samples for 2,3,7,8–TCDD. When the screening test is positive, the final qualitative confirmation and quantification must be made using Method 613.

1.3 The method detection limit (MDL, defined in Section 14.1)[1] for 2,3,7,8–TCDD is listed in Table 1. The MDL for a specific wastewater may be different from that listed, depending upon the nature of interferences in the sample matrix.

1.4 Because of the extreme toxicity of this compound, the analyst must prevent exposure to himself, of to others, by materials knows or believed to contain 2,3,7,8–TCDD. Section 4 of this method contains guidelines and protocols that serve as minimum safe-handling standards in a limited-access laboratory.

1.5 Any modification of this method, beyond those expressly permitted, shall be considered as a major modification subject to application and approval of alternate test procedures under 40 CFR 136.4 and 136.5.

1.6 This method is restricted to use by or under the supervision of analysts experienced in the use of a gas chromatograph/mass spectrometer and in the interpretation of mass spectra. Each analyst must demonstrate the ability to generate acceptable results with this method using the procedure described in Section 8.2.

2. Summary of Method

2.1 A measured volume of sample, approximately 1–L, is spiked with an internal standard of labeled 2,3,7,8–TCDD and extracted with methylene chloride using a separatory funnel. The methylene chloride extract is exchanged to hexane during concentration to a volume of 1.0 mL or less. The extract is then analyzed by capillary column GC/MS to separate and measure 2,3,7,8–TCDD.[2 3]

2.2 The method provides selected column chromatographic cleanup proceudres to aid in the elimination of interferences that may be encountered.

3. Interferences

3.1 Method interferences may be caused by contaminants in solvents, reagents, glassware, and other sample processing hardware that lead to discrete artifacts and/or elevated backgrounds at the masses (m/z) monitored. All of these materials must be routinely demonstrated to be free from interferences under the conditions of the analysis by running laboratory reagent blanks as described in Section 8.1.3.

3.1.1 Glassware must be scrupulously cleaned.[4] Clean all glassware as soon as possible after use by rinsing with the last solvent used in it. Solvent rinsing should be followed by detergent washing with hot water, and rinses with tap water and distilled water. The glassware should then be drained dry, and heated in a muffle furnace at 400 °C for 15 to 30 min. Some thermally stable materials, such as PCBs, may not be eliminated by the treatment. Solvent rinses with acetone and pesticide quality hexane may be substituted for the muffle furnace heating. Thorough rinsing with such solvents usually eliminates PCB interference. Volumetric ware should not be heated in a muffle furnace. After drying and cooling, glassware should be sealed and stored in a clean environment to prevent any accumulation of dust or other contaminants. Store inverted or capped with aluminum foil.

3.1.2 The use of high purity reagents and solvents helps to mininmize interference problems. Purification of solvents by distillation in all-glass systems may be required.

3.2 Matrix interferences may be caused by contaminants that are coextracted from the sample. The extent of matrix interferences will vary considerably from source to source, depending upon the nature and diversity of the industrial complex or municipality being sampled. 2,3,7,8–TCDD is often associated with other interfering chlorinated compounds which are at concentrations several magnitudes higher than that of 2,3,7,8–TCDD. The cleanup producers in Section 11 can be used to overcome many of these interferences, but unique samples may require additional cleanup approaches[1 5M7] to eliminate false positives and achieve the MDL listed in Table 1.

3.3 The primary column, SP–2330 or equivalent, resolves 2,3,7,8–TCDD from the other 21 TCDD insomers. Positive results using any other gas chromatographic column must be confirmed using the primary column.

4. Safety

4.1 The toxicity or carcinogenicity of each reagent used in this method has not been precisely defined; however, each chemical compound should be treated as a potential health hazard. From this viewpoint, exposure to these chemicals must be reduced to

the lowest possible level by whatever means available. The laboratory is responsible for maintaining a current awareness file of OSHA regulations regarding the safe handling of the chemicals specified in this method. A reference file of material data handling sheets should also be made available to all personnel involved in the chemical analysis. Additional references to laboratory safety are available and have been identified[8M10] for the information of the analyst. Benzene and 2,3,7,8–TCDD have been identified as suspected human or mammalian carcinogens.

4.2 Each laboratory must develop a strict safety program for handling 2,3,7,8–TCDD. The following laboratory practices are recommended:

4.2.1 Contamination of the laboratory will be minimized by conducting all manipulations in a hood.

4.2.2 The effluents of sample splitters for the gas chromatograph and roughing pumps on the GC/MS should pass through either a column of activated charcoal or be bubbled through a trap containing oil or high-boiling alcohols.

4.2.3 Liquid waste should be dissolved in methanol or ethanol and irradiated with ultraviolet light with a wavelength greater than 290 nm for several days. (Use F 40 BL lamps or equivalent). Analyze liquid wastes and dispose of the solutions when 2,3,7,8–TCDD can no longer be detected.

4.3 Dow Chemical U.S.A. has issued the following precautimns (revised November 1978) for safe handling of 2,3,7,8–TCDD in the laboratory:

4.3.1 The following statements on safe handling are as complete as possible on the basis of available toxicological information. The precautions for safe handling and use are necessarily general in nature since detailed, specific recommendations can be made only for the particular exposure and circumstances of each individual use. Inquiries about specific operations or uses may be addressed to the Dow Chemical Company. Assistance in evaluating the health hazards of particular plant conditions may be obtained from certain consulting laboratories and from State Departments of Health or of Labor, many of which have an industrial health service. 2,3,7,8–TCDD is extremely toxic to laboratory animals. However, it has been handled for years without injury in analytical and biological laboratories. Techniques used in handling radioactive and infectious materials are applicable to 2,3,7,8,–TCDD.

4.3.1.1 Protective equipment—Throwaway plastic gloves, apron or lab coat, safety glasses, and a lab hood adequate for radioactive work.

4.3.1.2 Training—Workers must be trained in the proper method of removing contaminated gloves and clothing without contacting the exterior surfaces.

4.3.1.3 Personal hygiene—Thorough washing of hands and forearms after each manipulation and before breaks (coffee, lunch, and shift).

4.3.1.4 Confinement—Isolated work area, posted with signs, segregated glassware and tools, plastic-backed absorbent paper on benchtops.

4.3.1.5 Waste—Good technique includes minimizing contaminated waste. Plastic bag liners should be used in waste cans. Janitors must be trained in the safe handling of waste.

4.3.1.6 Disposal of wastes—2,3,7,8–TCDD decomposes above 800 °C. Low-level waste such as absorbent paper, tissues, animal remains, and plastic gloves may be burned in a good incinerator. Gross quantities (milligrams) should be packaged securely and disposed through commercial or governmental channels which are capable of handling high-level radioactive wastes or extremely toxic wastes. Liquids should be allowed to evaporate in a good hood and in a disposable container. Residues may then be handled as above.

4.3.1.7 Decontamination—For personal decontamination, use any mild soap with plenty of scrubbing action. For decontamination of glassware, tools, and surfaces, Chlorothene NU Solvent (Trademark of the Dow Chemical Company) is the least toxic solvent shown to be effective. Satisfactory cleaning may be accomplished by rinsing with Chlorothene, then washing with any detergent and water. Dishwater may be disposed to the sewer. It is prudent to minimize solvent wastes because they may require special disposal through commercial sources which are expensive.

4.3.1.8 Laundry—Clothing known to be contaminated should be disposed with the precautions described under Section 4.3.1.6. Lab coats or other clothing worn in 2,3,7,8–TCDD work areas may be laundered.

Clothing should be collected in plastic bags. Persons who convey the bags and launder the clothing should be advised of the hazard and trained in proper handling. The clothing may be put into a washer without contact if the launderer knows the problem. The washer should be run through a cycle before being used again for other clothing.

4.3.1.9 Wipe tests—A useful method of determining cleanliness of work surfaces and tools is to wipe the surface with a piece of filter paper. Extraction and analysis by gas chromatography can achieve a limit of sensitivity of 0.1 μg per wipe. Less than 1 μg of 2,3,7,8–TCDD per sample indicates acceptable cleanliness; anything higher warrants further cleaning. More than 10 μg on a wipe sample constitutes an acute hazard and requires prompt cleaning before further use of the equipment or work space. A high (>10 μg)

2,3,7,8–TCDD level indicates that unacceptable work practices have been employed in the past.

4.3.1.10 Inhalation—Any procedure that may produce airborne contamination must be done with good ventilation. Gross losses to a ventilation system must not be allowed. Handling of the dilute solutions normally used in analytical and animal work presents no inhalation hazards except in the case of an accident.

4.3.1.11 Accidents—Remove contaminated clothing immediately, taking precautions not to contaminate skin or other articles. Wash exposed skin vigorously and repeatedly until medical attention is obtained.

5. Apparatus and Materials

5.1 Sampling equipment, for discrete or composite sampling.

5.1.1 Grab sample bottle—1–L or 1-qt, amber glass, fitted with a screw cap lined with Teflon. Foil may be substituted for Teflon if the sample is not corrosive. If amber bottles are not available, protect samples from light. The bottle and cap liner must be washed, rinsed with acetone or methylene chloride, and dried before use to minimize contamination.

5.1.2 Automatic sampler (optional)—The sampler must incorporate glass sample containers for the collection of a minimum of 250 mL of sample. Sample containers must be kept refrigerated at 4 °C and protected from light during compositing. If the sampler uses a peristaltic pump, a minimum length of compressible silicone rubber tubing may be used. Before use, however, the compressible tubing should be thoroughly rinsed with methanol, followed by repeated rinsings with distilled water to minimize the potential for contamination of the sample. An integrating flow meter is required to collect flow proportional composites.

5.1.3 Clearly label all samples as ''POISON'' and ship according to U.S. Department of Transportation regulations.

5.2 Glassware (All specifications are suggested. Catalog numbers are included for illustration only.):

5.2.1 Separatory funnels—2–L and 125-mL, with Teflon stopcock.

5.2.2 Concentrator tube, Kuderna-Danish—10-mL, graduated (Kontes K–570050–1025 or equivalent). Calibration must be checked at the volumes employed in the test. Ground glass stopper is used to prevent evaporation of extracts.

5.2.3 Evaporative flask, Kuderna-Danish—500–mL (Kontes K–570001–0500 or equivalent). Attach to concentrator tube with springs.

5.2.4 Snyder column, Kuderna-Danish—Three-ball macro (Kontes K–503000–0121 or equivalent).

5.2.5 Snyder column, Kuderna-Danish—Two-ball micro (Kontes K–569001–0219 or equivalent).

5.2.6 Vials—10 to 15–mL, amber glass, with Teflon-lined screw cap.

5.2.7 Chromatographic column—300 mm long × 10 mm ID, with Teflon stopcock and coarse frit filter disc at bottom.

5.2.8 Chromatographic column—400 mm long × 11 mm ID, with Teflon stopcock and coarse frit filter disc at bottom.

5.3 Boiling chips—Approximately 10/40 mesh. Heat to 400 °C for 30 min or Soxhlet extract with methylene chloride.

5.4 Water bath—Heated, with concentric ring cover, capable of temperature control (±2 °C). The bath should be used in a hood.

5.5 GC/MS system:

5.5.1 Gas chromatograph—An analytical system complete with a temperature programmable gas chromatograph and all required accessories including syringes, analytical columns, and gases. The injection port must be designed for capillary columns. Either split, splitless, or on-column injection techniques may be employed, as long as the requirements of Section 7.1.1 are achieved.

5.5.2 Column—60 m long × 0.25 mm ID glass or fused silica, coated with SP–2330 (or equivalent) with a film thickness of 0.2 µm. Any equivalent column must resolve 2, 3, 7, 8–TCDD from the other 21 TCDD isomers.[16]

5.5.3 Mass spectrometer—Either a low resolution mass spectrometer (LRMS) or a high resolution mass spectrometer (HRMS) may be used. The mass spectrometer must be equipped with a 70 V (nominal) ion source and be capable of aquiring m/z abundance data in real time selected ion monitoring (SIM) for groups of four or more masses.

5.5.4 GC/MS interface—Any GC to MS interface can be used that achieves the requirements of Section 7.1.1. GC to MS interfaces constructed of all glass or glass-lined materials are recommended. Glass surfaces can be deactivated by silanizing with dichlorodimethylsilane. To achieve maximum sensitivity, the exit end of the capillary column should be placed in the ion source. A short piece of fused silica capillary can be used as the interface to overcome problems associated with straightening the exit end of glass capillary columns.

5.5.5 The SIM data acquired during the chromatographic program is defined as the Selected Ion Current Profile (SICP). The SICP can be acquired under computer control or as a real time analog output. If computer control is used, there must be software available to plot the SICP and report peak height or area data for any m/z in the SICP between specified time or scan number limits.

5.6 Balance—Analytical, capable of accurately weighing 0.0001 g.

6. Reagents

6.1 Reagent water—Reagent water is defined as a water in which an interferent is not observed at the MDL of 2, 3, 7, 8–TCDD.

6.2 Sodium hydroxide solution (10 N)—Dissolve 40 g of NaOH (ACS) in reagent water and dilute to 100 mL. Wash the solution with methylene chloride and hexane before use.

6.3 Sodium thiosulfate—(ACS) Granular.

6.4 Sulfuric acid—Concentrated (ACS, sp. gr. 1.84).

6.5 Acetone, methylene chloride, hexane, benzene, ortho-xylene, tetradecane—Pesticide quality or equivalent.

6.6 Sodium sulfate—(ACS) Granular, anhydrous. Purify by heating at 400 °C for 4 h in a shallow tray.

6.7 Alumina—Neutral, 80/200 mesh (Fisher Scientific Co., No. A–540 or equivalent). Before use, activate for 24 h at 130 °C in a foil-covered glass container.

6.8 Silica gel—High purity grade, 100/120 mesh (Fisher Scientific Co., No. S–679 or equivalent).

6.9 Stock standard solutions (1.00 µg/µL)—Stock standard solutimns can be prepared from pure standard materials or purchased as certified solutions. Acetone should be used as the solvent for spiking solutions; ortho-xylene is recommended for calibration standards for split injectors; and tetradecane is recommended for splitless or on-colum injectors. Analyze stock internal standards to verify the absence of native 2,3,7,8–TCDD.

6.9.1 Prepare stock standard solutions of 2,3,7,8–TCDD (mol wt 320) and either $^{37}Cl_4$ 2,3,7,8–TCDD (mol wt 328) or $^{13}Cl_{12}$ 2,3,7,8–TCDD (mol wt 332) in an isolated area by accurately weighing about 0.0100 g of pure material. Dissolve the material in pesticide quality solvent and dilute to volume in a 10-mL volumetric flask. When compound purity is assayed to be 96% or greater, the weight can be used without correction to calculate the concentration of the stock standard. Commercially prepared stock standards can be used at any concentration if they are certified by the manufacturer or by an independent source.

6.9.2 Transfer the stock standard solutions into Teflon-sealed screw-cap bottles. Store in an isolated refrigerator protected from light. Stock standard solutions should be checked frequently for signs of degradation or evaporation, especially just prior to preparing calibration standards or spiking solutions from them.

6.9.3 Stock standard solutions must be replaced after six months, or sooner if comparison with check standards indicates a problem.

6.10 Internal standard spiking solution (25 ng/mL)—Using stock standard solution, prepare a spiking solution in acetone of either $^{13}Cl_{12}$ or $^{37}Cl_4$ 2,3,7,8–TCDD at a concentration of 25 ng/mL. (See Section 10.2)

6.11 Quality control check sample concentrate—See Section 8.2.1.

7. Calibration

7.1 Establish gas chromatograhic operating conditions equivalent to those given in Table 1 and SIM conditions for the mass spectrometer as described in Section 12.2 The GC/MS system must be calibrated using the internal standard technique.

7.1.1 Using stock standards, prepare calibration standards that will allow measurement of relative response factors of at least three concentration ratios of 2,3,7,8–TCDD to internal standard. Each calibration standard must be prepared to contain the internal standard at a concentration of 25 ng/mL. If any interferences are contributed by the internal standard at m/z 320 and 322, its concentration may be reduced in the calibration standards and in the internal standard spiking solution (Section 6.10). One of the calibration standards should contain 2,3,7,8–TCDD at a concentration near, but above, the MDL and the other 2,3,7,8–TCDD concentrations should correspond to the expected range of concentrations found in real samples or should define the working range of the GC/MS system.

7.1.2 Using injections of 2 to 5 µL, analyze each calibration standardaccording to Section 12 and tabulate peak height or area response against the concentration of 2,3,7,8–TCDD and internal standard. Calculate response factors (RF) for 2,3,7,8–TCDD using Equation 1.

$$RF = \frac{(A_s)(C_{is})}{(A_{is})(C_s)}$$

Equation 1

where:

A_s = SIM response for 2,3,7,8–TCDD m/z 320.

A_{is} = SIM response for the internal standard, m/z 332 for $^{13}C_{12}$ 2,3,7,8–TCDD m/z 328 for $^{37}Cl_4$ 2,3,7,8–TCDD.

C_{is} = Concentration of the internal standard (µg/L).

C_s = Concentration of 2,3,7,8–TCDD (µg/L).

If the RF value over the working range is a constant (<10% relative standard deviation, RSD), the RF can be assumed to be invariant and the average RF can be used for calculations. Alternatively, the results can be used to plot a calibration curve of response ratios, A_s/A_{is}, vs. RF.

7.1.3 The working calibration curve or RF must be verified on each working day by the measurement of one or more 2,3,7,8–TCDD calibration standards. If the response for 2,3,7,8–TCDD varies from the predicted response by more than ±15%, the test must be repeated using a fresh calibration standard. Alternatively, a new calibration curve must be prepared.

7.2 Before using any cleanup procedure, the analyst must process a series of calibration standards through the procedure to validate elution patterns and the absence of interferences from the reagents.

8. Quality Control

8.1 Each laboratory that uses this method is required to operate a formal quality control program. The minimum requirements of this program consist of an initial demonstration of laboratory capability and an ongoing analysis of spiked samples to evaluate and document data quality. The laboratory must maintain records to document the quality of data that is generated. Ongoing data quality checks are compared with established performance criteria to determine if the results of analyses meet the performance characteristics of the method. When results of sample spikes indicate atypical method performance, a quality control check standard must be analyzed to confirm that the measurements were performed in an in-control mode of operation.

8.1.1 The analyst must make an initial, one-time, demonstration of the ability to generate acceptable accuracy and precision with this method. This ability is established as described in Section 8.2.

8.1.2 In recognition of advances that are occurring in chromatography, the analyst is permitted certain options (detailed in Sections 10.5, 11.1, and 12.1) to improve the separations or lower the cost of measurements. Each time such a modification is made to the method, the analyst is required to repeat the procedure in Section 8.2

8.1.3 Before processing any samples, the analyst must analyze a reagent water blank to demonstrate that interferences from the analytical system and glassware are under control. Each time a set of samples is extracted or reagents are changed, a reagent water blank must be processed as a safeguard against laboratory contamination.

8.1.4 The laboratory must, on an ongoing basis, spike and analyze a minimum of 10% of all samples with native 2,3,7,8–TCDD to monitor and evaluate laboratory data quality. This procedure is described in Section 8.3.

8.1.5 The laboratory must, on an ongoing basis, demonstrate through the analyses of quality control check standards that the operation of the measurement system is in control. This procedure is described in Section 8.4. The frequency of the check standard analyses is equivalent to 10% of all samples analyzed but may be reduced if spike recoveries from samples (Section 8.3) meet all specified quality control criteria.

8.1.6 The laboratory must maintain performance records to document the quality of data that is generated. This procedure is described in Section 8.5.

8.2 To establish the ability to generate acceptable accuracy and precision, the analyst must perform the following operations.

8.2.1 A quality control (QC) check sample concentrate is required containing 2,3,7,8–TCDD at a concentration of 0.100 µg/mL in acetone. The QC check sample concentrate must be obtained from the U.S. Environmental Protection Agency, Environmental Monitoring and Support Laboratory in Cincinnati, Ohio, if available. If not available from that source, the QC check sample concentrate must be obtained from another external source. If not available from either source above, the QC check sample concentrate must be prepared by the laboratory using stock standards prepared independently from those used for calibration.

8.2.2 Using a pipet, prepare QC check samples at a concentration of 0.100 µg/L (100 ng/L) by adding 1.00 mL of QC check sample concentrate to each of four 1–L aliquots of reagent water.

8.2.3 Analyze the well-mixed QC check samples according to the method beginning in Section 10.

8.2.4 Calculate the average recovery ($\bar{X}$) in µg/L, and the standard deviation of the recovery (s) in µg/L, for 2,3,7,8–TCDD using the four results.

8.2.5 Compare s and ($\bar{X}$) with the corresponding acceptance criteria for precision and accuracy, respectively, found in Table 2. If s and $\bar{X}$ meet the acceptance criteria, the system performance is acceptable and analysis of actual samples can begin. If s exceeds the precision limit or $\bar{X}$ falls outside the range for accuracy, the system performance is unacceptable for 2,3,7,8–TCDD. Locate and correct the source of the problem and repeat the test beginning with Section 8.2.2.

8.3 The laboratory must, on an ongoing basis, spike at least 10% of the samples from each sample site being monitored to assess accuracy. For laboratories analyzing one to ten samples per month, at least one spiked sample per month is required.

8.3.1 The concentration of the spike in the sample should be determined as follows:

8.3.1.1 If, as in compliance monitoring, the concentration of 2,3,7,8–TCDD in the sample is being checked against a regulatory concentration limit, the spike should be at that limit or 1 to 5 times higher than the background concentration determined in Section 8.3.2, whichever concentration would be larger.

8.3.1.2 If the concentration of 2,3,7,8–TCDD in the sample is not being checked against a limit specific to that parameter, the spike should be at 0.100 µg/L or 1 to 5 times higher than the background concentration determined in Section 8.3.2, whichever concentration would be larger.

8.3.1.3 If it is impractical to determine background levels before spiking (e.g., maximum holding times will be exceeded), the

spike concentration should be (1) the regulatory concentration limit, if any; or, if none (2) the larger of either 5 times higher than the expected background concentration or 0.100 μg/L.

8.3.2 Analyze one sample aliquot to determine the background concentration (B) of 2,3,7,8–TCDD. If necessary, prepare a new QC check sample concentrate (Section 8.2.1) appropriate for the background concentration in the sample. Spike a second sample aliquot with 1.0 mL of the QC check sample concentrate and analyze it to determine the concentration after spiking (A) of 2,3,7,8–TCDD. Calculate percent recovery (P) as 100(A − B)%T, where T is the known true value of the spike.

8.3.3 Compare the percent recovery (P) for 2,3,7,8–TCDD with the corresponding QC acceptance criteria found in Table 2. These acceptance criteria were calculated to include an allowance for error in measurement of both the background and spike concentrations, assuming a spike to background ratio of 5:1. This error will be accounted for to the extent that the analyst's spike to background ratio approaches 5:1.[11] If spiking was performed at a concentration lower than 0.100 μg/L, the analyst must use either the QC acceptance criteria in Table 2, or optional QC acceptance criteria calculated for the specific spike concentration. To calculate optional acceptance criteria for the recovery of 2,3,7,8–TCDD: (1) Calculate accuracy (X′) using the equation in Table 3, substituting the spike concentration (T) for C; (2) calculate overall precision (S′) using the equation in Table 3, substituting X′ for X; (3) calculate the range for recovery at the spike concentration as (100 X′/T)±2.44(100 S′/T)%.[11]

8.3.4 If the recovery of 2,3,7,8–TCDD falls outside the designated range for recovery, a check standard must be analyzed as described in Section 8.4.

8.4 If the recovery of 2,3,7,8–TCDD fails the acceptance criteria for recovery in Section 8.3, a QC check standard must be prepared and analyzed.

NOTE: The frequency for the required analysis of a QC check standard will depend upon the complexity of the sample matrix and the performance of the laboratory.

8.4.1 Prepare the QC check standard by adding 1.0 mL of QC check sample concentrate (Section 8.2.1 or 8.3.2) to 1 L of reagent water.

8.4.2 Analyze the QC check standard to determine the concentration measured (A) of 2,3,7,8–TCDD. Calculate the percent recovery (P_s) as 100 (A/T)%, where T is the true value of the standard concentration.

8.4.3 Compare the percent recovery (P_s) with the corresponding QC acceptance criteria found in Table 2. If the recovery of 2,3,7,8–TCDD falls outside the designated range, the laboratory performance is judged to be out of control, and the problem must be immediately identified and corrected. The analytical result for 2,3,7,8–TCDD in the unspiked sample is suspect and may not be reported for regulatory compliance purposes.

8.5 As part of the QC program for the laboratory, method accuracy for wastewater samples must be assessed and records must be maintained. After the analysis of five spiked wastewater samples as in Section 8.3, calculate the average percent recovery ($\bar{P}$) and the spandard deviation of the percent recovery (s_p). Express the accuracy assessment as a percent recovery interval from $\bar{P} - 2s_p$ to $\bar{P} + 2s_p$. If $\bar{P}$ = 90% and s_p = 10%, for example, the accuracy interval is expressed as 70–110%. Update the accuracy assessment on a regular basis (e.g. after each five to ten new accuracy measurements).

8.6 It is recommended that the laboratory adopt additional quality assurance practices for use with this method. The specific practices that are most productive depend upon the needs of the laboratory and the nature of the samples. Field duplicates may be analyzed to assess the precision of the environmental measurements. Whenever possible, the laboratory should analyze standard reference materials and participate in relevant performance evaluation studies.

9. Sample Collection, Preservation, and Handling

9.1 Grab samples must be collected in glass containers. Conventional sampling practices[12] should be followed, except that the bottle must not be prerinsed with sample before collection. Composite samples should be collected in refrigerated glass containers in accordance with the requirements of the program. Automatic sampling equipment must be as free as possible of Tygon tubing and other potential sources of contamination.

9.2 All samples must be iced or refrigerated at 4 °C and protected from light from the time of collection until extraction. Fill the sample bottles and, if residual chlorine is present, add 80 mg of sodium thiosulfate per liter of sample and mix well. EPA Methods 330.4 and 330.5 may be used for measurement of residual chlorine.[13] Field test kits are available for this purpose.

9.3 Label all samples and containers ''POISON'' and ship according to applicable U.S. Department of Transportation regulations.

9.4 All samples must be extracted within 7 days of collection and completely analyzed within 40 days of extraction.[2]

10. Sample Extraction

CAUTION: When using this method to analyze for 2,3,7,8–TCDD, all of the following operations must be performed in a limited-access laboratory with the analyst wearing full

protective covering for all exposed skin surfaces. See Section 4.2.

10.1 Mark the water meniscus on the side of the sample bottle for later determination of sample volume. Pour the entire sample into a 2–L separatory funnel.

10.2 Add 1.00 mL of internal standard spiking solution to the sample in the separatory funnel. If the final extract will be concentrated to a fixed volume below 1.00 mL (Section 12.3), only that volume of spiking solution should be added to the sample so that the final extract will contain 25 ng/mL of internal standard at the time of analysis.

10.3 Add 60 mL of methylene chloride to the sample bottle, seal, and shake 30 s to rinse the inner surface. Transfer the solvent to the separatory funnel and extract the sample by shaking the funnel for 2 min. with periodic venting to release excess pressure. Allow the organic layer to separate from the water phase for a minimum of 10 min. If the emulsion interface between layers is more than one-third the vmlume of the solvent layer, the analyst must employ mechanical techniques to complete the phase separation. The optimum technique depends upon the sample, but may include stirring, filtration of the emulsion through glass wool, centrifugation, or other physical methods. Collect the methylene chloride extract in a 250-mL Erlenmeyer flask.

10.4 Add a second 60-mL volume of methylene chloride to the sample bottle and repeat the extraction procedure a second time, combining the extracts in the Erlenmeyer flask. Perform a third extraction in the same manner.

10.5 Assemble a Kuderna-Danish (K-D) concentrator by attaching a 10-mL concentrator tube to a 500-mL evaporative flask. Other concentration devices or techniques may be used in place of the K-D concentrator if the requirements of Section 8.2 are met.

10.6 Pour the combined extract into the K-D concentrator. Rinse the Erlenmeyer flask with 20 to 30 mL of methylele chloride to complete the quantitative transfer.

10.7 Add one or two clean boiling chips to the evaporative flask and attach a three-ball Snyder column. Prewet the Snyder column by adding about 1 mL of methylene chloride to the top. Place the K-D apparatus on a hot water bath (60 to 65 °C) so that the concentrator tube is partially immersed in the hot water, and the entire lower rounded surface of the flask is bathed with hot vapor. Adjust the vertical position of the apparatus and the water temperature as required to complete the concentration in 15 to 20 min. At the proper rate of distillation the balls of the column will actively chatter but the chambers will not flood with condensed solvent. When the apparent volume of liquid reaches 1 mL, remove the K-D apparatus and allow it to drain and cool for at least 10 min.

10.8 Momentarily remove the Snyder column, add 50 mL of hexane and a new boiling chip, and reattach the Snyder column. Raise the temperature of the water bath to 85 to 90 °C. Concentrate the extract as in Section 10.7, except use hexane to prewet the column. Remove the Snyder column and rinse the flask and its lower joint into the concentrator tube with 1 to 2 mL of hexane. A 5-mL syringe is recommended for this operation. Set aside the K-D glassware for reuse in Section 10.14.

10.9 Pour the hexane extract from the concentrator tube into a 125-mL separatory funnel. Rinse the concentrator tube four times with 10-mL aliquots of hexane. Combine all rinses in the 125-mL separatory funnel.

10.10 Add 50 mL of sodium hydroxide solution to the funnel and shake for 30 to 60 s. Discard the aqueous phase.

10.11 Perform a second wash of the organic layer with 50 mL of reagent water. Discard the aqueous phase.

10.12 Wash the hexane layer with a least two 50-mL aliquots of concentrated sulfuric acid. Continue washing the hexane layer with 50-mL aliquots of concentrated sulfuric acid until the acid layer remains colorless. Discard all acid fractions.

10.13 Wash the hexane layer with two 50-mL aliquots of reagent water. Discard the aqueous phases.

10.14 Transfer the hexane extract into a 125-mL Erlenmeyer flask containing 1 to 2 g of anhydrous sodium sulfate. Swirl the flask for 30 s and decant the hexane extract into the reassembled K-D apparatus. Complete the quantitative transfer with two 10-mL hexane rinses of the Erlenmeyer flask.

10.15 Replace the one or two clean boiling chips and concentrate the extract to 6 to 10 mL as in Section 10.8.

10.16 Add a clean boiling chip to the concentrator tube and attach a two-ball micro-Snyder column. Prewet the column by adding about 1 mL of hexane to the top. Place the micro-K-D apparatus on the water bath so that the concentrator tube is partially immersed in the hot water. Adjust the vertical position of the apparatus and the water temperature as required to complete the concentration in 5 to 10 min. At the proper rate of distillation the balls of the column will actively chatter but the chambers will not flood. When the apparent volume of liquid reaches about 0.5 mL, remove the K-D apparatus and allow it to drain and cool for at least 10 min. Remove the micro-Snyder column and rinse its lower joint into the concentrator tube with 0.2 mL of hexane.

Adjust the extract volume to 1.0 mL with hexane. Stopper the concentrator tube and store refrigerated and protected from light if further processing will not be performed immediately. If the extract will be stored

longer than two days, it should be transferred to a Teflon-sealed screw-cap vial. If the sample extract requires no further cleanup, proceed with GC/MS analysis (Section 12). If the sample requires further cleanup, proceed to Section 11.

10.17 Determine the original sample volume by refilling the sample bottle to the mark and transferring the liquid to a 1000-mL graduated cylinder. Record the sample volume to the nearest 5 mL.

11. Cleanup and Separation

11.1 Cleanup procedures may not be necessary for a relatively clean sample matrix. If particular circumstances demand the use of a cleanup procedure, the analyst may use either procedure below or any other appropriate procedure.[1 5M7] However, the analyst first must demonstrate that the requirements of Section 8.2 can be met using the method as revised to incorporate the cleanup procedure. Two cleanup column options are offered to the analyst in this section. The alumina column should be used first to overcome interferences. If background problems are still encountered, the silica gel column may be helpful.

11.2 Alumina column cleanup for 2,3,7,8–TCDD:

11.2.1 Fill a 300 mm long × 10 mm ID chromatographic column with activated alumina to the 150 mm level. Tap the column gently to settle the alumina and add 10 mm of anhydrous sodium sulfate to the top.

11.2.2 Preelute the column with 50 mL of hexane. Adjust the elution rate to 1 mL/min. Discard the eluate and just prior to exposure of the sodium sulfate layer to the air, quantitatively transfer the 1.0-mL sample extract onto the column using two 2-mL portions of hexane to complete the transfer.

11.2.3 Just prior to exposure of the sodium sulfate layer to the air, add 50 mL of 3% methylene chloride/95% hexane (V/V) and continue the elution of the column. Discard the eluate.

11.2.4 Next, elute the column with 50 mL of 20% methylene chloride/80% hexane (V/V) into a 500-mL K-D flask equipped with a 10-mL concentrator tube. Concentrate the collected fraction to 1.0 mL as in Section 10.16 and analyze by GC/MS (Section 12).

11.3 Silica gel column cleanup for 2,3,7,8–TCDD:

11.3.1 Fill a 400 mm long × 11 mm ID chromatmgraphic column with silica gel to the 300 mm level. Tap the column gently to settle the silica gel and add 10 mm of anhydrous sodium sulfate to the top.

11.3.2 Preelute the column with 50 mL of 20% benzene/80% hexane (V/V). Adjust the elution rate to 1 mL/min. Discard the eluate and just prior to exposure of the sodium sulfate layer to the air, quantitatively transfer the 1.0-mL sample extract onto the column using two 2-mL portions of 20% benzene/80% hexane to complete the transfer.

11.3.3 Just prior to exposure of the sodium sulfate layer to the air, add 40 mL of 20% benzene/80% hexane to the column. Collect the eluate in a clean 500-mL K-D flask equipped with a 10-mL concentrator tube. Concentrate the collected fraction to 1.0 mL as in Section 10.16 and analyze by GC/MS.

12. GC/MS Analysis

12.1 Table 1 summarizes the recommended operating conditions for the gas chromatograph. Included in this table are retention times and MDL that can be achieved under these conditions. Other capillary columns or chromatographic conditions may be used if the requirements of Sections 5.5.2 and 8.2 are met.

12.2 Analyze standards and samples with the mass spectrometer operating in the selected ion monitoring (SIM) mode using a dwell time to give at least seven points per peak. For LRMS, use masses at m/z 320, 322, and 257 for 2,3,7,8–TCDD and either m/z 328 for $^{37}Cl_4$ 2,3,7,8–TCDD or m/z 332 for $^{13}C_{12}$ 2,3,7,8–TCDD. For HRMS, use masses at m/z 319.8965 and 321.8936 for 2,3,7,8–TCDD and either m/z 327.8847 for $^{37}Cl_4$ 2,3,7,8–TCDD or m/z 331.9367 for $^{13}C_{12}$ 2,3,7,8–TCDD.

12.3 If lower detection limits are required, the extract may be carefully evaporated to dryness under a gentle stream of nitrogen with the concentrator tube in a water bath at about 40 °C. Conduct this operation immediately before GC/MS analysis. Redissolve the extract in the desired final volume of ortho-xylene or tetradecane.

12.4 Calibrate the system daily as described in Section 7.

12.5 Inject 2 to 5 µL of the sample extract into the gas chromatograph. The volume of calibration standard injected must be measured, or be the same as all sample injection volumes.

12.6 The presence of 2,3,7,8–TCDD is qualitatively confirmed if all of the following criteria are achieved:

12.6.1 The gas chromatographic column must resolve 2,3,7,8–TCDD from the other 21 TCDD isomers.

12.6.2 The masses for native 2,3,7,8–TCDD (LRMS-m/z 320, 322, and 257 and HRMS-m/z 320 and 322) and labeled 2,3,7,8–TCDD (m/z 328 or 332) must exhibit a simultaneous maximum at a retention time that matches that of native 2,3,7,8–TCDD in the calibration standard, with the performance specifications of the analytical system.

12.6.3 The chlorine isotope ratio at m/z 320 and m/z 322 must agree to within±10% of that in the calibration standard.

12.6.4 The signal of all peaks must be greater than 2.5 times the noise level.

12.7 For quantitation, measure the response of the m/z 320 peak for 2,3,7,8–TCDD

and the m/z 332 peak for $^{13}C_{12}$ 2,3,7,8–TCDD or the m/z 328 peak for $^{37}Cl_4$ 2,3,7,8–TCDD.

12.8 Co-eluting impurities are suspected if all criteria are achieved except those in Section 12.6.3. In this case, another SIM analysis using masses at m/z 257, 259, 320 and either m/a 328 or m/z 322 can be performed. The masses at m/z 257 and m/z 259 are indicative of the loss of one chlorine and one carbonyl group from 2,3,7,8–TCDD. If masses m/z 257 and m/z 259 give a chlorine isotope ratio that agrees to within ±10% of the same cluster in the calibration standards, then the presence of TCDD can be confirmed. Co-eluting DDD, DDE, and PCB residues can be confirmed, but will require another injection using the appropriate SIM masses or full repetitive mass scans. If the response for $^{37}Cl_4$ 2,3,7,8–TCDD at m/z 328 is too large, PCB contamination is suspected and can be confirmed by examining the response at both m/z 326 and m/z 328. The $^{37}Cl_4$ 2,3,7,8–TCDD internal standard gives negligible response at m/z 326. These pesticide residues can be removed using the alumina column cleanup procedure.

12.9 If broad background interference restricts the sensitivity of the GC/MS analysis, the analyst should employ additional cleanup procedures and reanalyze by GC/MS.

12.10 In those circumstances where these procedures do not yield a definitive conclusion, the use of high resolution mass spectrometry is suggested.[5]

13. Calculations

13.1 Calculate the concentration of 2,3,7,8–TCDD in the sample using the response factor (RF) determined in Section 7.1.2 and Equation 2.

$$\text{Concentration } (\mu g/L) = \frac{(A)(V_t)}{(V_i)(V_s)}$$

Equation 2

where:

A_s = SIM response for 2,3,7,8–TCDD at m/z 320.

A_{is} = SIM response for the internal standard at m/z 328 or 332.

I_s = Amount of internal standard added to each extract (μg).

V_o = Volume of water extracted (L).

13.2 For each sample, calculate the percent recovery of the internal standard by comparing the area of the m/z peak measured in the sample to the area of the same peak in the calibration standard. If the recovery is below 50%, the analyst should review all aspects of his analytical technique.

13.3 Report results in μg/L without correction for recovery data. All QC data obtained should be reported with the sample results.

14. Method Performance

14.1 The method detection limit (MDL) is defined as the minimum concentration of a substance that can be measured and reported with 99% confidence that the value is above zero.[1] The MDL concentration listed in Table 1 was obtained using reagent water.[14] The MDL actually achieved in a given analysis will vary depending on instrument sensitivity and matrix effects.

14.2 This method was tested by 11 laboratories using reagent water, drinking water, surface water, and three industrial wastewaters spiked at six concentrations over the range 0.02 to 0.20 μg/L.[15] Single operator precision, overall precision, and method accuracy were found to be directly related to the concentration of the parameter and essentially independent of the sample matrix. Linear equations to describe these relationships are presented in Table 3.

REFERENCES

1. 40 CFR part 136, appendix B.

2. ''Determination of TCDD in Industrial and Municipal Wastewaters,'' EPA 600/4–82–028, National Technical Information Service, PB82–196882, Springfield, Virginia 22161, April 1982.

3. Buser, H.R., and Rappe, C. ''High Resolution Gas Chromatography of the 22 Tetrachlorodibenzo-p-dioxin Isomers,'' *Analytical Chemistry*, *52*, 2257 (1980).

4. ASTM Annual Book of Standards, Part 31, D3694–78. ''Standard Practices for Preparation of Sample Containers and for Preservation of Organic Constituents,'' American Society for Testing and Materials, Philadelphia.

5. Harless, R. L., Oswald, E. O., and Wilkinson, M. K. ''Sample Preparation and Gas Chromatography/Mass Spectrometry Determination of 2,3,7,8-Tetrachlorodibenzo-p-dioxin,'' *Analytical Chemistry*, *52*, 1239 (1980).

6. Lamparski, L. L., and Nestrick, T. J. ''Determination of Tetra-, Hepta-, and Octachlorodibenzo-p-dioxin Isomers in Particulate Samples at Parts per Trillion Levels,'' *Analytical Chemistry*, *52*, 2045 (1980).

7. Longhorst, M. L., and Shadoff, L. A. ''Determination of Parts-per-Trillion Concentrations of Tetra-, Hexa-, and Octachlorodibenzo-p-dioxins in Human Milk,'' *Analytical Chemistry*, *52*, 2037 (1980).

8. ''Carcinogens—Working with Carcinogens,'' Department of Health, Education, and Welfare, Public Health Service, Center for Disease Control, National Institute for Occupational Safety and Health, Publication No. 77–206, August 1977.

9. ''OSHA Safety and Health Standards, General Industry,'' (29 CFR part 1910), Occuptional Safety and Health Administration, OSHA 2206 (Revised, January 1976).

10. ''Safety in Academic Chemistry Laboratories,'' American Chemical Society Publication, Committee on Chemical Safety, 3rd Edition, 1979.

11. Provost, L. P., and Elder, R. S., ''Interpretation of Percent Recovery Data,'' *American Laboratory*, *15*, 58–63 (1983). (The value 2.44 used in the equation in Section 8.3.3 is two times the value 1.22 derived in this report.)

12. ASTM Annual Book of Standards, Part 31, D3370–76, ''Standard Practices for Sampling Water,'' American Society for Testing and Materials, Philadelphia.

13. ''Methods, 330.4 (Titrimetric, DPD-FAS) and 330.5 (Spectrophotometric DPD) for Chlorine, Total Residual,'' Methods for Chemical Analysis of Water and Wastes, EPA–600/4–79–020, U.S. Environmental Protection Agency, Environmental Monitoring and Support Laboratory, Cincinnati, Ohio 45268, March 1979.

14. Wong, A.S. et al. ''The Determination of 2,3,7,8–TCDD in Industrial and Municipal Wastewaters, Method 613, Part 1—Development and Detection Limits,'' G. Choudhay, L. Keith, and C. Ruppe, ed., Butterworth Inc., (1983).

15. ''EPA Method Study 26, Method 613: 2,3,7,8–Tetrachlorodibenzo-p-dioxin,'' EPA 600/4–84–037, National Technical Information Service, PB84–188879, Springfield, Virginia 22161, May 1984.

TABLE 1—CHROMATOGRAPHIC CONDITIONS AND METHOD DETECTION LIMIT

Parameter	Retention time (min)	Method detection limit (µg/L)
2,3,7,8–TCDD	13.1	0.002

Column conditions: SP–2330 coated on a 60 m long × 0.25 mm ID glass column with hydrogen carrier gas at 40 cm/sec linear velocity, splitless injection using tetradecane. Column temperature held isothermal at 200 °C for 1 min, then programmed at 8 °C/min to 250 °C and held. Use of helium carrier gas will approximately double the retention time.

TABLE 2—QC ACCEPTANCE CRITERIA—METHOD 613

Parameter	Test conc. (µg/L)	Limit for s (µg/L)	Range for X (µg/L)	Range for P, P_s (%)
2,3,7,8–TCDD	0.100	0.0276	0.0523–0.1226	45–129

s = Standard deviation of four recovery measurements, in µg/L (Section 8.2.4).

$\bar{X}$ = Average recovery for four recovery measurements, in µg/L (Section 8.2.4).

P, P_s = Percent recovery measured (Section 8.3.2, Section 8.4.2).

NOTE: These criteria are based directly upon the method performance data in Table 3. Where necessary, the limits for recovery have been broadened to assure applicability of the limits to concentrations below those used to develop Table 3.

TABLE 3—METHOD ACCURACY AND PRECISION AS FUNCTIONS OF CONCENTRATION—METHOD 613

Parameter	Accuracy, as recovery, X″ (µg/L)	Single analyst, precision, s_r'' (µ/L)	Overall precision, S″ (µ/g/L)
2,3,7,8-TCDD	0.86C + 0.00145	$0.13\bar{X} + 0.00129$	$0.19\bar{X} + 0.00028$

X′ = Expected recovery for one or more measurements. of a sample containing a concentration of C, in µg/L.
s_r' = Expected single analyst standard deviation of measurements at an average concentration found of $\bar{X}$, in µg/L.
S′ = Expected interlaboratory standard deviation of measurements at an average concentration found of $\bar{X}$, in µg/L.
C = True value for the concentration, in µg/L.
$\bar{X}$ = Average recovery found for measurements of samples containing a concentration of C, in µg/L.

METHOD 624.1—PURGEABLES BY GC/MS

1. Scope and Application

1.1 This method is for determination of purgeable organic pollutants in industrial discharges and other environmental samples by gas chromatography combined with mass spectrometry (GC/MS), as provided under 40 CFR 136.1. This revision is based on previous protocols (References 1—3), on the revision promulgated October 26, 1984, and on an interlaboratory method validation study (Reference 4). Although this method was validated through an interlaboratory study conducted in the early 1980s, the fundamental chemistry principles used in this method remain sound and continue to apply.

1.2 The analytes that may be qualitatively and quantitatively determined using this method and their CAS Registry numbers are listed in Table 1. The method may be extended to determine the analytes listed in Table 2; however, poor purging efficiency or gas chromatography of some of these analytes may make quantitative determination difficult. For example, an elevated temperature may be required to purge some analytes from water. If an elevated temperature is used, calibration and all quality control (QC) tests must be performed at the elevated temperature. EPA encourages the use of this method to determine additional compounds amenable to purge-and-trap GC/MS.

1.3 The large number of analytes in Tables 1 and 2 of this method makes testing difficult if all analytes are determined simultaneously. Therefore, it is necessary to determine and perform QC tests for ''analytes of interest'' only. Analytes of interest are those required to be determined by a regulatory/control authority or in a permit, or by a client. If a list of analytes is not specified, the

analytes in Table 1 must be determined, at a minimum, and QC testing must be performed for these analytes. The analytes in Table 1 and some of the analytes in Table 2 have been identified as Toxic Pollutants (40 CFR 401.15), expanded to a list of Priority Pollutants (40 CFR part 423, appendix A).

1.4 Method detection limits (MDLs; Reference 5) for the analytes in Table 1 are listed in that table. These MDLs were determined in reagent water (Reference 6). Advances in analytical technology, particularly the use of capillary (open-tubular) columns, allowed laboratories to routinely achieve MDLs for the analytes in this method that are 2–10 times lower than those in the version promulgated in 1984. The MDL for a specific wastewater may differ from those listed, depending on the nature of interferences in the sample matrix.

1.4.1 EPA has promulgated this method at 40 CFR part 136 for use in wastewater compliance monitoring under the National Pollutant Discharge Elimination System (NPDES). The data reporting practices described in section 13.2 are focused on such monitoring needs and may not be relevant to other uses of the method.

1.4.2 This method includes ''reporting limits'' based on EPA's ''minimum level'' (ML) concept (see the glossary in section 20). Table 1 contains MDL values and ML values for many of the analytes. The MDL for an analyte in a specific wastewater may differ from that listed in Table 1, depending upon the nature of interferences in the sample matrix.

1.5 This method is performance-based. It may be modified to improve performance (e.g., to overcome interferences or improve the accuracy of results) provided all performance requirements are met.

1.5.1 Examples of allowed method modifications are described at 40 CFR 136.6. Other examples of allowed modifications specific to this method are described in section 8.1.2.

1.5.2 Any modification beyond those expressly allowed at 40 CFR 136.6 or in section 8.1.2 of this method shall be considered a major modification that is subject to application and approval of an alternate test procedure under 40 CFR 136.4 and 136.5.

1.5.3 For regulatory compliance, any modification must be demonstrated to produce results equivalent or superior to results produced by this method when applied to relevant wastewaters (section 8.3).

1.6 This method is restricted to use by or under the supervision of analysts experienced in the operation of a purge-and-trap system and a gas chromatograph/mass spectrometer and in the interpretation of mass spectra. Each analyst must demonstrate the ability to generate acceptable results with this method using the procedure in section 8.2.

1.7 Terms and units of measure used in this method are given in the glossary at the end of the method.

2. Summary of Method

2.1 A gas is bubbled through a measured volume of water in a specially-designed purging chamber. The purgeables are efficiently transferred from the aqueous phase to the vapor phase. The vapor is swept through a sorbent trap where the purgeables are trapped. After purging is completed, the trap is heated and backflushed with the gas to desorb the purgeables onto a gas chromatographic column. The column is temperature programmed to separate the purgeables which are then detected with a mass spectrometer.

2.2 Different sample sizes in the range of 5–25 mL are allowed in order to meet differing sensitivity requirements. Calibration and QC samples must have the same volume as field samples.

3. Interferences

3.1 Impurities in the purge gas, organic compounds outgassing from the plumbing ahead of the trap, and solvent vapors in the laboratory account for the majority of contamination problems. The analytical system must be demonstrated to be free from contamination under the conditions of the analysis by analyzing blanks initially and with each analytical batch (samples analyzed on a given 12-hour shift, to a maximum of 20 samples), as described in Section 8.5. Fluoropolymer tubing, fittings, and thread sealant should be used to avoid contamination.

3.2 Samples can be contaminated by diffusion of volatile organics (particularly fluorocarbons and methylene chloride) through the septum seal into the sample during shipment and storage. Protect samples from sources of volatiles during collection, shipment, and storage. A reagent water field blank carried through sampling and analysis can serve as a check on such contamination.

3.3 Contamination by carry-over can occur whenever high level and low level samples are analyzed sequentially. To reduce the potential for carry-over, the purging device and sample syringe must be rinsed with reagent water between sample analyses. Whenever an unusually concentrated sample is encountered, it should be followed by an analysis of a blank to check for cross contamination. For samples containing large amounts of water-soluble materials, suspended solids, high boiling compounds or high purgeable levels, it may be necessary to wash the purging device with a detergent solution, rinse it with distilled water, and then dry it in a 105 °C oven between analyses. The trap and other parts of the system are also subject to contamination; therefore, frequent bakeout

and purging of the entire system may be required. Screening samples at high dilution may prevent introduction of contaminants into the system.

4. Safety

4.1 The toxicity or carcinogenicity of each reagent used in this method has not been precisely defined; however, each chemical compound should be treated as a potential health hazard. From this viewpoint, exposure to these chemicals must be reduced to the lowest possible level. The laboratory is responsible for maintaining a current awareness file of OSHA regulations regarding the safe handling of the chemicals specified in this method. A reference file of safety data sheets (SDSs, OSHA, 29 CFR 1910.1200(g)) should also be made available to all personnel involved in sample handling and chemical analysis. Additional references to laboratory safety are available and have been identified (References 7–9) for the information of the analyst.

4.2. The following analytes covered by this method have been tentatively classified as known or suspected human or mammalian carcinogens: Benzene; carbon tetrachloride; chloroform; 1,4-dichlorobenzene; 1,2-dichloroethane; 1,2-dichloropropane; methylene chloride; tetrachloroethylene; trichloroethylene; and vinyl chloride. Primary standards of these toxic compounds should be prepared in a chemical fume hood, and a NIOSH/MESA approved toxic gas respirator should be worn when handling high concentrations of these compounds.

4.3 This method allows the use of hydrogen as a carrier gas in place of helium (Section 5.3.1.2). The laboratory should take the necessary precautions in dealing with hydrogen, and should limit hydrogen flow at the source to prevent buildup of an explosive mixture of hydrogen in air.

5. Apparatus and Materials

NOTE: Brand names, suppliers, and part numbers are cited for illustration purposes only. No endorsement is implied. Equivalent performance may be achieved using equipment and materials other than those specified here. Demonstration of equivalent performance that meets the requirements of this method is the responsibility of the laboratory. Suppliers for equipment and materials in this method may be found through an on-line search.

5.1 Sampling equipment for discrete sampling.

5.1.1 Vial—25- or 40-mL capacity, or larger, with screw cap with a hole in the center (Fisher #13075 or equivalent). Unless precleaned, detergent wash, rinse with tap and reagent water, and dry at 105 ± 5 °C before use.

5.1.2 Septum—Fluoropolymer-faced silicone (Fisher #12722 or equivalent). Unless pre-cleaned, detergent wash, rinse with tap and reagent water, and dry at 105 ± 5 °C for one hour before use.

5.2 Purge-and-trap system—The purge-and-trap system consists of three separate pieces of equipment: A purging device, trap, and desorber. Several complete systems are commercially available with autosamplers. Any system that meets the performance requirements in this method may be used.

5.2.1 The purging device should accept 5- to 25-mL samples with a water column at least 3 cm deep. The purge gas must pass though the water column as finely divided bubbles. The purge gas must be introduced no more than 5 mm from the base of the water column. Purge devices of a different volume may be used so long as the performance requirements in this method are met.

5.2.2 The trap should be at least 25 cm long and have an inside diameter of at least 0.105 in. The trap should be packed to contain the following minimum lengths of adsorbents: 1.0 cm of methyl silicone coated packing (section 6.3.2), 15 cm of 2,6-diphenylene oxide polymer (section 6.3.1), and 8 cm of silica gel (section 6.3.3). A trap with different dimensions and packing materials is acceptable so long as the performance requirements in this method are met.

5.2.3 The desorber should be capable of rapidly heating the trap to the temperature necessary to desorb the analytes of interest, and of maintaining this temperature during desorption. The trap should not be heated higher than the maximum temperature recommended by the manufacturer.

5.2.4 The purge-and-trap system may be assembled as a separate unit or coupled to a gas chromatograph.

5.3 GC/MS system.

5.3.1 Gas chromatograph (GC)—An analytical system complete with a temperature programmable gas chromatograph and all required accessories, including syringes and analytical columns. Autosamplers designed for purge-and-trap analysis of volatiles also may be used.

5.3.1.1 Injection port—Volatiles interface, split, splitless, temperature programmable split/splitless (PTV), large volume, on-column, backflushed, or other.

5.3.1.2 Carrier gas—Data in the tables in this method were obtained using helium carrier gas. If another carrier gas is used, analytical conditions may need to be adjusted for optimum performance, and calibration and all QC tests must be performed with the alternative carrier gas. See Section 4.3 for precautions regarding the use of hydrogen as a carrier gas.

5.3.2 GC column—See the footnote to Table 3. Other columns or column systems may be used provided all requirements in this method are met.

5.3.3 Mass spectrometer—Capable of repetitively scanning from 35–260 Daltons (amu) every 2 seconds or less, utilizing a 70 eV (nominal) electron energy in the electron impact ionization mode, and producing a mass spectrum which meets all criteria in Table 4 when 50 ng or less of 4-bromofluorobenzene (BFB) is injected through the GC inlet. If acrolein, acrylonitrile, chloromethane, and vinyl chloride are to be determined, it may be necessary to scan from below 25 Daltons to measure the peaks in the 26–35 Dalton range for reliable identification.

5.3.4 GC/MS interface—Any GC to MS interface that meets all performance requirements in this method may be used.

5.3.5 Data system—A computer system must be interfaced to the mass spectrometer that allows continuous acquisition and storage of mass spectra throughout the chromatographic program. The computer must have software that allows searching any GC/MS data file for specific m/z's (masses) and plotting m/z abundances versus time or scan number. This type of plot is defined as an extracted ion current profile (EICP). Software must also be available that allows integrating the abundance at any EICP between specified time or scan number limits.

5.4 Syringes—Graduated, 5–25 mL, glass hypodermic with Luerlok tip, compatible with the purging device.

5.5 Micro syringes—Graduated, 25–1000 µL, with 0.006 in. ID needle.

5.6 Syringe valve—Two-way, with Luer ends.

5.7 Syringe—5 mL, gas-tight with shut-off valve.

5.8 Bottle—15 mL, screw-cap, with Teflon cap liner.

5.9 Balance—Analytical, capable of accurately weighing 0.0001 g.

6. Reagents

6.1 Reagent water—Reagent water is defined as water in which the analytes of interest and interfering compounds are not detected at the MDLs of the analytes of interest. It may be generated by passing deionized water, distilled water, or tap water through a carbon bed, passing the water through a water purifier, or heating the water to between 90 and 100 °C while bubbling contaminant-free gas through it for approximately 1 hour. While still hot, transfer the water to screw-cap bottles and seal with a fluoropolymer-lined cap.

6.2 Sodium thiosulfate—(ACS) Granular.

6.3 Trap materials.

6.3.1 2,6-Diphenylene oxide polymer—Tenax, 60/80 mesh, chromatographic grade, or equivalent.

6.3.2 Methyl silicone packing—3% OV–1 on Chromosorb-W, 60/80 mesh, or equivalent.

6.3.3 Silica gel—35/60 mesh, Davison, Grade-15 or equivalent.

6.3.4 Other trap materials are acceptable if performance requirements in this method are met.

6.4 Methanol—Demonstrated to be free from the target analytes and potentially interfering compounds.

6.5 Stock standard solutions—Stock standard solutions may be prepared from pure materials, or purchased as certified solutions. Traceability must be to the National Institute of Standards and Technology (NIST) or other national or international standard, when available. Stock solution concentrations alternative to those below may be used. Prepare stock standard solutions in methanol using assayed liquids or gases as appropriate. Because some of the compounds in this method are known to be toxic, primary dilutions should be prepared in a hood, and a NIOSH/MESA approved toxic gas respirator should be worn when high concentrations of neat materials are handled. The following procedure may be used to prepare standards from neat materials:

6.5.1 Place about 9.8 mL of methanol in a 10-mL ground-glass-stoppered volumetric flask. Allow the flask to stand, unstoppered, for about 10 minutes or until all alcohol wetted surfaces have dried. Weigh the flask to the nearest 0.1 mg.

6.5.2 Add the assayed reference material.

6.5.2.1 Liquids—Using a 100 µL syringe, immediately add two or more drops of assayed reference material to the flask. Be sure that the drops fall directly into the alcohol without contacting the neck of the flask. Reweigh, dilute to volume, stopper, then mix by inverting the flask several times. Calculate the concentration in µg/µL from the net gain in weight.

6.5.2.2 Gases—To prepare standards for any of compounds that boil below 30 °C, fill a 5-mL valved gas-tight syringe with reference standard vapor to the 5.0 mL mark. Lower the needle to 5 mm above the methanol meniscus. Slowly introduce the vapor above the surface of the liquid (the vapor will rapidly dissolve in the methanol). Reweigh, dilute to volume, stopper, then mix by inverting the flask several times. Calculate the concentration in µg/µL from the net gain in weight.

6.5.3 When compound purity is assayed to be 96% or greater, the weight may be used without correction to calculate the concentration of the stock standard. Commercially prepared stock standards may be used at any concentration if they are certified by the manufacturer or by an independent source.

6.5.4 Prepare fresh standards weekly for the gases and 2-chloroethylvinyl ether. Unless stated otherwise in this method, store non-aqueous standards in fluoropolymer-

lined screw-cap, or heat-sealed, glass containers, in the dark at −20 to −10 °C. Store aqueous standards; e.g., the aqueous LCS (section 8.4.1) in the dark at ≤6 °C (but do not freeze) with zero headspace; e.g., in VOA vials (section 5.1.1). Standards prepared by the laboratory may be stored for up to one month, except when comparison with QC check standards indicates that a standard has degraded or become more concentrated due to evaporation, or unless the laboratory has data on file to prove stability for a longer period. Commercially prepared standards may be stored until the expiration date provided by the vendor, except when comparison with QC check standards indicates that a standard has degraded or become more concentrated due to evaporation, or unless the laboratory has data from the vendor on file to prove stability for a longer period.

NOTE: 2-Chloroethylvinyl ether has been shown to be stable for as long as one month if prepared as a separate standard, and the other analytes have been shown to be stable for as long as 2 months if stored at less than −10 °C with minimal headspace in sealed, miniature inert-valved vials.

6.6 Secondary dilution standards—Using stock solutions, prepare secondary dilution standards in methanol that contain the compounds of interest, either singly or mixed. Secondary dilution standards should be prepared at concentrations such that the aqueous calibration standards prepared in section 7.3.2 will bracket the working range of the analytical system.

6.7 Surrogate standard spiking solution—Select a minimum of three surrogate compounds from Table 5. The surrogates selected should match the purging characteristics of the analytes of interest as closely as possible. Prepare a stock standard solution for each surrogate in methanol as described in section 6.5, and prepare a solution for spiking the surrogates into all blanks, LCSs, and MS/MSDs. Prepare the spiking solution such that spiking a small volume will result in a constant concentration of the surrogates. For example, add 10 µL of a spiking solution containing the surrogates at a concentration of 15 µg/mL in methanol to a 5-mL aliquot of water to produce a concentration of 30 µg/L for each surrogate. Other surrogate concentrations may be used. Store per section 6.5.4.

6.8 BFB standard—Prepare a solution of BFB in methanol as described in Sections 6.5 and 6.6. The solution should be prepared such that an injection or purging from water will result in introduction of ≤ 50 ng into the GC. BFB may be included in a mixture with the internal standards and/or surrogates.

6.9 Quality control check sample concentrate—See Section 8.2.1.

7. Calibration

7.1 Assemble a purge-and-trap system that meets the specifications in Section 5.2. Prior to first use, condition the trap overnight at 180 °C by backflushing with gas at a flow rate of at least 20 mL/min. Condition the trap after each analysis at a temperature and time sufficient to prevent detectable concentrations of the analytes or contaminants in successive analyses.

7.2 Connect the purge-and-trap system to the gas chromatograph. The gas chromatograph should be operated using temperature and flow rate conditions equivalent to those given in the footnotes to Table 3. Alternative temperature and flow rate conditions may be used provided that performance requirements in this method are met.

7.3 Internal standard calibration.

7.3.1 Internal standards.

7.3.1.1 Select three or more internal standards similar in chromatographic behavior to the compounds of interest. Suggested internal standards are listed in Table 5. Use the base peak m/z as the primary m/z for quantification of the standards. If interferences are found at the base peak, use one of the next two most intense m/z's for quantitation. Demonstrate that measurements of the internal standards are not affected by method or matrix interferences.

7.3.1.2 To assure accurate analyte identification, particularly when selected ion monitoring (SIM) is used, it may be advantageous to include more internal standards than those suggested in Section 7.3.1.1. An analyte will be located most accurately if its retention time relative to an internal standard is in the range of 0.8 to 1.2.

7.3.1.3 Prepare a stock standard solution for each internal standard in methanol as described in Section 6.5, and prepare a solution for spiking the internal standards into all blanks, LCSs, and MS/MSDs. Prepare the spiking solution such that spiking a small volume will result in a constant concentration of the internal standards. For example, add 10 µL of a spiking solution containing the internal standards at a concentration of 15 µg/mL in methanol to a 5-mL aliquot of water to produce a concentration of 30 µg/L for each internal standard. Other concentrations may be used. The internal standard solution and the surrogate standard spiking solution (Section 6.7) may be combined, if desired. Store per section 6.5.4.

7.3.2 Calibration.

7.3.2.1 Calibration standards.

7.3.2.1.1 Prepare calibration standards at a minimum of five concentration levels for each analyte of interest by adding appropriate volumes of one or more stock standards to a fixed volume (e.g., 40 mL) of reagent water in volumetric glassware. Fewer levels may be necessary for some analytes based on the sensitivity of the MS, but no

fewer than 3 levels may be used, and only the highest or lowest point(s) may be dropped from the calibration. One of the calibration standards should be at a concentration at or below the ML or as specified by a regulatory/control authority or in a permit. The ML value may be rounded to a whole number that is more convenient for preparing the standard, but must not exceed the ML values listed in Table 1 for those analytes which list ML values. Alternatively, the laboratory may establish the ML for each analyte based on the concentration of the lowest calibration standard in a series of standards produced in the laboratory or obtained from a commercial vendor, again, provided that the ML value does not exceed the MLs in Table 1, and provided that the resulting calibration meets the acceptance criteria in Section 7.3.4, based on the RSD, RSE, or R^2. The concentrations of the higher standards should correspond to the expected range of concentrations found in real samples, or should define the working range of the GC/MS system for full-scan and/or SIM operation, as appropriate. A minimum of six concentration levels is required for a second order, non-linear (e.g., quadratic; $ax^2 + bx + c = 0$) calibration. Calibrations higher than second order are not allowed.

7.3.2.1.2 To each calibration standard or standard mixture, add a known constant volume of the internal standard spiking solution (section 7.3.1.3) and surrogate standard spiking solution (section 6.7) or the combined internal standard solution and surrogate spiking solution (section 7.3.1.3). Aqueous standards may be stored up to 24 hours, if held in sealed vials with zero headspace. If not so stored, they must be discarded after one hour.

7.3.2.2 Prior to analysis of the calibration standards, analyze the BFB standard (section 6.8) and adjust the scan rate of the MS to produce a minimum of 5 mass spectra across the BFB GC peak, but do not exceed 2 seconds per scan. Adjust instrument conditions until the BFB criteria in Table 4 are met. Once the scan conditions are established, they must be used for analyses of all standards, blanks, and samples.

NOTE: The BFB spectrum may be evaluated by summing the intensities of the m/z's across the GC peak, subtracting the background at each m/z in a region of the chromatogram within 20 scans of but not including any part of the BFB peak. The BFB spectrum may also be evaluated by fitting a Gaussian to each m/z and using the intensity at the maximum for each Gaussian, or by integrating the area at each m/z and using the integrated areas. Other means may be used for evaluation of the BFB spectrum so long as the spectrum is not distorted to meet the criteria in Table 4.

7.3.2.3 Analyze the mid-point standard and enter or review the retention time, relative retention time, mass spectrum, and quantitation m/z in the data system for each analyte of interest, surrogate, and internal standard. If additional analytes (Table 2) are to be quantified, include these analytes in the standard. The mass spectrum for each analyte must be comprised of a minimum of 2 m/z's; 3 to 5 m/z's assure more reliable analyte identification. Suggested quantitation m/z's are shown in Table 6 as the primary m/z. For analytes in Table 6 that do not have a secondary m/z, acquire a mass spectrum and enter one or more secondary m/z's for more reliable identification. If an interference occurs at the primary m/z, use one of the secondary m/z's or an alternative m/z. A single m/z only is required for quantitation.

7.3.2.4 For SIM operation, determine the analytes in each descriptor, the quantitation m/z for each analyte (the quantitation m/z can be the same as for full-scan operation; Section 7.3.2.3), the dwell time on each m/z for each analyte, and the beginning and ending retention time for each descriptor. Analyze the verification standard in scan mode to verify m/z's and establish retention times for the analytes. There must be a minimum of two m/z's for each analyte to assure analyte identification. To maintain sensitivity, the number of m/z's in a descriptor should be limited. For example, for a descriptor with 10 m/z's and a chromatographic peak width of 5 sec, a dwell time of 100 ms at each m/z would result in a scan time of 1 second and provide 5 scans across the GC peak. The quantitation m/z will usually be the most intense peak in the mass spectrum. The quantitation m/z and dwell time may be optimized for each analyte. The acquisition table used for SIM must take into account the mass defect (usually less than 0.2 Dalton) that can occur at each m/z monitored. Refer to the footnotes to Table 3 for establishing operating conditions and to section 7.3.2.2 for establishing scan conditions.

7.3.2.5 For combined scan and SIM operation, set up the scan segments and descriptors to meet requirements in sections 7.3.2.2–7.3.2.4. Analyze unfamiliar samples in the scan mode to assure that the analytes of interest are determined.

7.3.3 Analyze each calibration standard according to Section 10 and tabulate the area at the quantitation m/z against concentration for each analyte of interest, surrogate, and internal standard. Calculate the response factor (RF) for each compound at each concentration using Equation 1.

$$RF = \frac{(A_s x C_{is})}{(A_{is} x C_s)}$$ Equation 1

Where:

A_s = Area of the characteristic m/z for the analyte to be measured.

A_{is} = Area of the characteristic m/z for the internal standard.

C_{is} = Concentration of the internal standard (µg/L).

C_s = Concentration of the analyte to be measured (µg/L).

7.3.4 Calculate the mean (average) and relative standard deviation (RSD) of the response factors. If the RSD is less than 35%, the RF can be assumed to be invariant and the average RF can be used for calculations. Alternatively, the results can be used to fit a linear or quadratic regression of response ratios, A_s/A_{is}, vs. concentration ratios Cs/Cis. If used, the regression must be weighted inversely proportional to concentration (1/C). The coefficient of determination (R^2) of the weighted regression must be greater than 0.920 (this value roughly corresponds to the RSD limit of 35%). Alternatively, the relative standard error (Reference 10) may be used as an acceptance criterion. As with the RSD, the RSE must be less than 35%. If an RSE less than 35% cannot be achieved for a quadratic regression, system performance is unacceptable, and the system must be adjusted and re-calibrated.

NOTE: Using capillary columns and current instrumentation, it is quite likely that a laboratory can calibrate the target analytes in this method and achieve a linearity metric (either RSD or RSE) well below 35%. Therefore, laboratories are permitted to use more stringent acceptance criteria for calibration than described here, for example, to harmonize their application of this method with those from other sources.

7.4 Calibration verification—Because the analytical system is calibrated by purge of the analytes from water, calibration verification is performed using the laboratory control sample (LCS). See section 8.4 for requirements for calibration verification using the LCS, and the Glossary for further definition.

8. Quality Control

8.1 Each laboratory that uses this method is required to operate a formal quality assurance program. The minimum requirements of this program consist of an initial demonstration of laboratory capability and ongoing analysis of spiked samples and blanks to evaluate and document data quality (40 CFR 136.7). The laboratory must maintain records to document the quality of data generated. Results of ongoing performance tests are compared with established QC acceptance criteria to determine if the results of analyses meet performance requirements of this method. When results of spiked samples do not meet the QC acceptance criteria in this method, a quality control check sample (laboratory control sample; LCS) must be analyzed to confirm that the measurements were performed in an in-control mode of operation. A laboratory may develop its own performance criteria (as QC acceptance criteria), provided such criteria are as or more restrictive than the criteria in this method.

8.1.1 The laboratory must make an initial demonstration of capability (DOC) to generate acceptable precision and recovery with this method. This demonstration is detailed in Section 8.2. On a continuing basis, the laboratory must repeat demonstration of capability (DOC) at least annually.

8.1.2 In recognition of advances that are occurring in analytical technology, and to overcome matrix interferences, the laboratory is permitted certain options (section 1.5 and 40 CFR 136.6(b)) to improve separations or lower the costs of measurements. These options may include an alternative purge-and-trap device, and changes in both column and type of mass spectrometer (see 40 CFR 136.6(b)(4)(xvi)). Alternative determinative techniques, such as substitution of spectroscopic or immunoassay techniques, and changes that degrade method performance, are not allowed. If an analytical technique other than GC/MS is used, that technique must have a specificity equal to or greater than the specificity of GC/MS for the analytes of interest. The laboratory is also encouraged to participate in inter-comparison and performance evaluation studies (see section 8.8).

8.1.2.1 Each time a modification is made to this method, the laboratory is required to repeat the procedure in section 8.2. If the detection limit of the method will be affected by the change, the laboratory must demonstrate that the MDLs (40 CFR part 136, appendix B) are lower than one-third the regulatory compliance limit or the MDLs in this method, whichever are greater. If calibration will be affected by the change, the instrument must be recalibrated per section 7. Once the modification is demonstrated to produce results equivalent or superior to results produced by this method, that modification may be used routinely thereafter, so long as the other requirements in this method are met (e.g., matrix spike/matrix spike

duplicate recovery and relative percent difference).

8.1.2.1.1 If a modification is to be applied to a specific discharge, the laboratory must prepare and analyze matrix spike/matrix spike duplicate (MS/MSD) samples (Section 8.3) and LCS samples (section 8.4). The laboratory must include internal standards and surrogates (section 8.7) in each of the samples. The MS/MSD and LCS samples must be fortified with the analytes of interest (section 1.3.). If the modification is for nationwide use, MS/MSD samples must be prepared from a minimum of nine different discharges (See section 8.1.2.1.2), and all QC acceptance criteria in this method must be met. This evaluation only needs to be performed once, other than for the routine QC required by this method (for example it could be performed by the vendor of the alternative materials) but any laboratory using that specific material must have the results of the study available. This includes a full data package with the raw data that will allow an independent reviewer to verify each determination and calculation performed by the laboratory (see section 8.1.2.2.5, items (a)–(l)).

8.1.2.1.2 Sample matrices on which MS/MSD tests must be performed for nationwide use of an allowed modification:

(a) Effluent from a publicly owned treatment works (POTW).

(b) ASTM D5905 Standard Specification for Substitute Wastewater.

(c) Sewage sludge, if sewage sludge will be in the permit.

(d) ASTM D1141 Standard Specification for Substitute Ocean Water, if ocean water will be in the permit.

(e) Untreated and treated wastewaters up to a total of nine matrix types (see *https://www.epa.gov/eg/industrial-effluent-guidelines* for a list of industrial categories with existing effluent guidelines).

(i) At least one of the above wastewater matrix types must have at least one of the following characteristics:

(A) Total suspended solids greater than 40 mg/L.

(B) Total dissolved solids greater than 100 mg/L.

(C) Oil and grease greater than 20 mg/L.

(D) NaCl greater than 120 mg/L.

(E) CaCO3 greater than 140 mg/L.

(ii) Results of MS/MSD tests must meet QC acceptance criteria in section 8.3.

(f) A proficiency testing (PT) sample from a recognized provider, in addition to tests of the nine matrices (section 8.1.2.1.1).

8.1.2.2 The laboratory is required to maintain records of modifications made to this method. These records include the following, at a minimum:

8.1.2.2.1 The names, titles, and business street addresses, telephone numbers, and email addresses of the analyst(s) that performed the analyses and modification, and of the quality control officer that witnessed and will verify the analyses and modifications.

8.1.2.2.2 A list of analytes, by name and CAS Registry Number.

8.1.2.2.3 A narrative stating reason(s) for the modifications.

8.1.2.2.4 Results from all quality control (QC) tests comparing the modified method to this method, including:

(a) Calibration (section 7).

(b) Calibration verification/LCS (section 8.4).

(c) Initial demonstration of capability (section 8.2).

(d) Analysis of blanks (section 8.5).

(e) Matrix spike/matrix spike duplicate analysis (section 8.3).

(f) Laboratory control sample analysis (section 8.4).

8.1.2.2.5 Data that will allow an independent reviewer to validate each determination by tracing the instrument output (peak height, area, or other signal) to the final result. These data are to include:

(a) Sample numbers and other identifiers.

(b) Analysis dates and times.

(c) Analysis sequence/run chronology.

(d) Sample volume (Section 10).

(e) Sample dilution (Section 13.2).

(f) Instrument and operating conditions.

(g) Column (dimensions, material, etc).

(h) Operating conditions (temperature program, flow rate, etc).

(i) Detector (type, operating conditions, etc).

(j) Chromatograms, mass spectra, and other recordings of raw data.

(k) Quantitation reports, data system outputs, and other data to link the raw data to the results reported.

(l) A written Standard Operating Procedure (SOP).

8.1.2.2.6 Each individual laboratory wishing to use a given modification must perform the start-up tests in section 8.1.2 (e.g., DOC, MDL), with the modification as an integral part of this method prior to applying the modification to specific discharges. Results of the DOC must meet the QC acceptance criteria in Table 7 for the analytes of interest (section 1.3), and the MDLs must be equal to or lower than the MDLs in Table3 for the analytes of interest

8.1.3 Before analyzing samples, the laboratory must analyze a blank to demonstrate that interferences from the analytical system, labware, and reagents are under control. Each time a batch of samples is analyzed or reagents are changed, a blank must be analyzed as a safeguard against laboratory contamination. Requirements for the blank are given in section 8.5.

8.1.4 The laboratory must, on an ongoing basis, spike and analyze samples to monitor

and evaluate method and laboratory performance on the sample matrix. The procedure for spiking and analysis is given in section 8.3.

8.1.5 The laboratory must, on an ongoing basis, demonstrate through analysis of a quality control check sample (laboratory control sample, LCS; on-going precision and recovery sample, OPR) that the measurement system is in control. This procedure is given in section 8.4.

8.1.6 The laboratory must maintain performance records to document the quality of data that is generated. This procedure is given in section 8.8.

8.1.7 The large number of analytes tested in performance tests in this method present a substantial probability that one or more will fail acceptance criteria when many analytes are tested simultaneously, and a re-test is allowed if this situation should occur. If, however, continued re-testing results in further repeated failures, the laboratory must document and report the failures (e.g., as qualifiers on results), unless the failures are not required to be reported as determined by the regulatory/control authority. Results associated with a QC failure for an analyte regulated in a discharge cannot be used to demonstrate regulatory compliance. QC failures do not relieve a discharger or permittee of reporting timely results.

8.2 Initial demonstration of capability (DOC)—To establish the ability to generate acceptable recovery and precision, the laboratory must perform the DOC in sections 8.2.1 through 8.2.6 for the analytes of interest. The laboratory must also establish MDLs for the analytes of interest using the MDL procedure at 40 CFR part 136, appendix B. The laboratory's MDLs must be equal to or lower than those listed in Table 1 for those analytes which list MDL values, or lower than one-third the regulatory compliance limit, whichever is greater. For MDLs not listed in Table 1, the laboratory must determine the MDLs using the MDL procedure at 40 CFR part 136, appendix B under the same conditions used to determine the MDLs for the analytes listed in Table 1. All procedures used in the analysis must be included in the DOC.

8.2.1 For the DOC, a QC check sample concentrate (LCS concentrate) containing each analyte of interest (section 1.3) is prepared in methanol. The QC check sample concentrate must be prepared independently from those used for calibration, but may be from the same source as the second-source standard used for calibration verification/LCS (sections 7.4 and 8.4). The concentrate should produce concentrations of the analytes of interest in water at the mid-point of the calibration range, and may be at the same concentration as the LCS (section 8.4).

NOTE: QC check sample concentrates are no longer available from EPA.

8.2.2 Using a pipet or micro-syringe, prepare four LCSs by adding an appropriate volume of the concentrate to each of four aliquots of reagent water. The volume of reagent water must be the same as the volume that will be used for the sample, blank (section 8.5), and MS/MSD (section 8.3). A volume of 5 mL and a concentration of 20 µg/L were used to develop the QC acceptance criteria in Table 7. An alternative volume and sample concentration may be used, provided that all QC tests are performed and all QC acceptance criteria in this method are met. Also add an aliquot of the surrogate spiking solution (section 6.7) and internal standard spiking solution (section 7.3.1.3) to the reagent-water aliquots.

8.2.3 Analyze the four LCSs according to the method beginning in section 10.

8.2.4 Calculate the average percent recovery ($\bar{X}$) and the standard deviation of the percent recovery (s) for each analyte using the four results.

8.2.5 For each analyte, compare s and $\bar{X}$ with the corresponding acceptance criteria for precision and recovery in Table 7. For analytes in Tables 1 and 2 not listed in Table 7, DOC QC acceptance criteria must be developed by the laboratory. EPA has provided guidance for development of QC acceptance criteria (References 11 and 12). Alternatively, acceptance criteria for analytes not listed in Table 7 may be based on laboratory control charts. If s and $\bar{X}$ for all analytes of interest meet the acceptance criteria, system performance is acceptable and analysis of blanks and samples may begin. If any individual s exceeds the precision limit or any individual $\bar{X}$ falls outside the range for recovery, system performance is unacceptable for that analyte.

NOTE: The large number of analytes in Tables 1 and 2 present a substantial probability that one or more will fail at least one of the acceptance criteria when many or all analytes are determined simultaneously. Therefore, the analyst is permitted to conduct a ''re-test'' as described in section 8.2.6.

8.2.6 When one or more of the analytes tested fail at least one of the acceptance criteria, repeat the test for only the analytes that failed. If results for these analytes pass, system performance is acceptable and analysis of samples and blanks may proceed. If one or more of the analytes again fail, system performance is unacceptable for the analytes that failed the acceptance criteria. Correct the problem and repeat the test (section 8.2). See section 8.1.7 for disposition of repeated failures.

NOTE: To maintain the validity of the test and re-test, system maintenance and/or adjustment is not permitted between this pair of tests.

8.3 Matrix spike and matrix spike duplicate (MS/MSD)—The purpose of the MS/MSD

requirement is to provide data that demonstrate the effectiveness of the method as applied to the samples in question by a given laboratory, and both the data user (discharger, permittee, regulated entity, regulatory/control authority, customer, other) and the laboratory share responsibility for provision of such data. The data user should identify the sample and the analytes of interest (section 1.3) to be spiked and provide sufficient sample volume to perform MS/MSD analyses. The laboratory must, on an ongoing basis, spike at least 5% of the samples in duplicate from each discharge being monitored to assess accuracy (recovery and precision). If direction cannot be obtained from the data user, the laboratory must spike at least one sample in duplicate per extraction batch of up to 20 samples with the analytes in Table 1. Spiked sample results should be reported only to the data user whose sample was spiked, or as requested or required by a regulatory/control authority, or in a permit.

8.3.1 If, as in compliance monitoring, the concentration of a specific analyte will be checked against a regulatory concentration limit, the concentration of the spike should be at that limit; otherwise, the concentration of the spike should be one to five times higher than the background concentration determined in section 8.3.2, at or near the mid-point of the calibration range, or at the concentration in the LCS (section 8.4) whichever concentration would be larger.

8.3.2 Analyze one sample aliquot to determine the background concentration (B) of the each analyte of interest. If necessary, prepare a new check sample concentrate (section 8.2.1) appropriate for the background concentration. Spike and analyze two additional sample aliquots, and determine the concentration after spiking (A_1 and A_2) of each analyte. Calculate the percent recoveries (P_1 and P_2) as 100 $(A_1 - B)/T$ and 100 $(A_2 - B)/T$, where T is the known true value of the spike. Also calculate the relative percent difference (RPD) between the concentrations (A_1 and A_2) as 200 $\sqrt{A_1 - A_2}/(A_1 + A_2)$. If necessary, adjust the concentrations used to calculate the RPD to account for differences in the volumes of the spiked aliquots.

8.3.3 Compare the percent recoveries (P_1 and P_2) and the RPD for each analyte in the MS/MSD aliquots with the corresponding QC acceptance criteria in Table 7. A laboratory may develop and apply QC acceptance criteria more restrictive than the criteria in Table 7, if desired.

8.3.3.1 If any individual P falls outside the designated range for recovery in either aliquot, or the RPD limit is exceeded, the result for the analyte in the unspiked sample is suspect. See Section 8.1.7 for disposition of failures.

8.3.3.2 The acceptance criteria in Table 7 were calculated to include an allowance for error in measurement of both the background and spike concentrations, assuming a spike to background ratio of 5:1. This error will be accounted for to the extent that the spike to background ratio approaches 5:1 (Reference 13) and is applied to spike concentrations of 20 µg/L and higher. If spiking is performed at a concentration lower than 20 µg/L, the laboratory must use the QC acceptance criteria in Table 7, the optional QC acceptance criteria calculated for the specific spike concentration in Table 8, or optional in-house criteria (Section 8.3.4). To use the acceptance criteria in Table 8: (1) Calculate recovery (X') using the equation in Table 8, substituting the spike concentration (T) for C; (2) Calculate overall precision (S') using the equation in Table 8, substituting X' for $\bar{X}$; (3) Calculate the range for recovery at the spike concentration as (100 X'/T) ± 2.44(100 S'/T)% (Reference 4). For analytes of interest in Tables 1 and 2 not listed in Table 7, QC acceptance criteria must be developed by the laboratory. EPA has provided guidance for development of QC acceptance criteria (References 11 and 12). Alternatively, acceptance criteria may be based on laboratory control charts. In-house LCS QC acceptance criteria must be updated at least every two years.

8.3.4 After analysis of a minimum of 20 MS/MSD samples for each target analyte and surrogate, and if the laboratory chooses to develop and apply in-house QC limits, the laboratory should calculate and apply in-house QC limits for recovery and RPD of future MS/MSD samples (section 8.3). The QC limits for recovery are calculated as the mean observed recovery ± 3 standard deviations, and the upper QC limit for RPD is calculated as the mean RPD plus 3 standard deviations of the RPDs. The in-house QC limits must be updated at least every two years and re-established after any major change in the analytical instrumentation or process. If in-house QC limits are developed, at least 80% of the analytes tested in the MS/MSD must have in-house QC acceptance criteria that are tighter than those in Table 7 and the remaining analytes (those other than the analytes included in the 80%) must meet the acceptance criteria in Table 7. If an in-house QC limit for the RPD is greater than the limit in Table 7, then the limit in Table 7 must be used. Similarly, if an in-house lower limit for recovery is below the lower limit in Table 7, then the lower limit in Table 7 must be used, and if an in-house upper limit for recovery is above the upper limit in Table 7, then the upper limit in Table 7 must be used.

8.4 Calibration verification/laboratory control sample (LCS)—The working calibration curve or RF must be verified immediately after calibration and at the beginning of each 12-hour shift by the measurement of an LCS. The LCS must be from a source different from the source used for

calibration (section 7.3.2.1), but may be the same as the sample prepared for the DOC (section 8.2.1).

NOTE: The 12-hour shift begins after analysis of BFB, the LCS, and the blank, and ends 12 hours later. BFB, the LCS, and blank are outside of the 12-hour shift (Section 11.4). The MS and MSD are treated as samples and are analyzed within the 12-hour shift.

8.4.1 Prepare the LCS by adding QC check sample concentrate (section 8.2.1) to reagent water. Include all analytes of interest (Section 1.3) in the LCS. The volume of reagent water must be the same as the volume used for the sample, blank (Section 8.5), and MS/MSD (section 8.3). Also add an aliquot of the surrogate solution (Section 6.7) and internal standard solution (section 7.3.1.3). The concentration of the analytes in reagent water should be the same as the concentration in the DOC (section 8.2.2).

8.4.2 Analyze the LCS prior to analysis of field samples in the batch of samples analyzed during the 12-hour shift (see the NOTE at section 8.4). Determine the concentration (A) of each analyte. Calculate the percent recovery (Q) as 100 (A/T) %, where T is the true value of the concentration in the LCS.

8.4.3 Compare the percent recovery (Q) for each analyte with its corresponding QC acceptance criterion in Table 7. For analytes of interest in Tables 1 and 2 not listed in Table 7, use the QC acceptance criteria developed for the LCS (section 8.4.5). If the recoveries for all analytes of interest fall within their respective QC acceptance criteria, analysis of blanks and field samples may proceed. If any individual Q falls outside the range, proceed according to section 8.4.4.

NOTE: The large number of analytes in Tables 1—2 present a substantial probability that one or more will fail the acceptance criteria when all analytes are tested simultaneously. Because a re-test is allowed in event of failure (sections 8.1.7 and 8.4.3), it may be prudent to analyze two LCSs together and evaluate results of the second analysis against the QC acceptance criteria only if an analyte fails the first test.

8.4.4 Repeat the test only for those analytes that failed to meet the acceptance criteria (Q). If these analytes now pass, system performance is acceptable and analysis of blanks and samples may proceed. Repeated failure, however, will confirm a general problem with the measurement system. If this occurs, repeat the test (section 8.4.2). using a fresh LCS (section 8.2.2) or an LCS prepared with a fresh QC check sample concentrate (section 8.2.1), or perform and document system repair. Subsequent to repair, repeat the calibration verification/LCS test (section 8.4). If the acceptance criteria for Q cannot be met, re-calibrate the instrument (section 7). See section 8.1.7 for disposition of repeated failures.

NOTE: To maintain the validity of the test and re-test, system maintenance and/or adjustment is not permitted between the pair of tests.

8.4.5 After analysis of 20 LCS samples, and if the laboratory chooses to develop and apply in-house QC limits, the laboratory should calculate and apply in-house QC limits for recovery to future LCS samples (section 8.4). Limits for recovery in the LCS calculated as the mean recovery ±3 standard deviations. A minimum of 80% of the analytes tested for in the LCS must have QC acceptance criteria tighter than those in Table 7, and the remaining analytes (those other than the analytes included in the 80%) must meet the acceptance criteria in Table 7. If an in-house lower limit for recovery is lower than the lower limit in Table 7, the lower limit in Table 7 must be used, and if an in-house upper limit for recovery is higher than the upper limit in Table 7, the upper limit in Table 7 must be used. Many of the analytes and surrogates do not have acceptance criteria. The laboratory should use 60–140% as interim acceptance criteria for recoveries of spiked analytes that do not have recovery limits specified in Table 7, and least 80% of the analytes should meet the 60–140% interim criteria until in-house LCS limits are developed. Alternatively, acceptance criteria for analytes that do not have recovery limits in Table 7 may be based on laboratory control charts. In-house QC acceptance criteria must be updated at least every two years.

8.5 Blank—A blank must be analyzed prior to each 12-hour shift to demonstrate freedom from contamination. A blank must also be analyzed after a sample containing a high concentration of an analyte or potentially interfering compound to demonstrate freedom from carry-over.

8.5.1 Spike the internal standards and surrogates into the blank. Analyze the blank immediately after analysis of the LCS (Section 8.4) and prior to analysis of the MS/MSD and samples to demonstrate freedom from contamination.

8.5.2 If any analyte of interest is found in the blank: At a concentration greater than the MDL for the analyte, at a concentration greater than one-third the regulatory compliance limit, or at a concentration greater than one-tenth the concentration in a sample analyzed during the 12-hour shift (section 8.4), *whichever is greater;* analysis of samples must be halted and samples affected by the blank must be re-analyzed. If, however, continued re-testing results in repeated blank contamination, the laboratory must document and report the failures (e.g., as qualifiers on results), unless the failures are not required to be reported as determined by the regulatory/control authority. Results associated with blank contamination for an analyte regulated in a discharge cannot be used to demonstrate regulatory compliance.

QC failures do not relieve a discharger or permittee of reporting timely results.

8.6 Surrogate recoveries—The laboratory must evaluate surrogate recovery data in each sample against its in-house surrogate recovery limits for surrogates that do not have acceptance criteria in Table 7. The laboratory may use 60–140% as interim acceptance criteria for recoveries for surrogates not listed in Table 5. At least 80% of the surrogates must meet the 60–140% interim criteria until in-house limits are developed. Alternatively, surrogate recovery limits may be developed from laboratory control charts.

8.6.1 Spike the surrogates into all samples, blanks, LCSs, and MS/MSDs. Compare surrogate recoveries against the QC acceptance criteria in Table 7. For surrogates in Table 5 without QC acceptance criteria in Table 7, and for other surrogates that may be used by the laboratory, limits must be developed by the laboratory. EPA has provided guidance for development of QC acceptance criteria (References 11 and 12). Alternatively, surrogate recovery limits may be developed from laboratory control charts. In-house QC acceptance criteria must be updated at least every two years.

8.6.2 If any recovery fails its criteria, attempt to find and correct the cause of the failure. See section 8.1.7 for disposition of failures.

8.7 Internal standard responses.

8.7.1 Calibration verification/LCS—The responses (GC peak heights or areas) of the internal standards in the calibration verification/LCS must be within 50% to 200% (1/2 to 2×) of their respective responses in the mid-point calibration standard. If they are not, repeat the LCS test using a fresh QC check sample (section 8.4.1) or perform and document system repair. Subsequent to repair, repeat the calibration verification/LCS test (section 8.4). If the responses are still not within 50% to 200%, re-calibrate the instrument (section 7) and repeat the calibration verification/LCS test.

8.7.2 Samples, blanks, and MS/MSDs—The responses (GC peak heights or areas) of each internal standard in each sample, blank, and MS/MSD must be within 50% to 200% (1/2 to 2×) of its respective response in the mid-point calibration standard. If, as a group, all internal standards are not within this range, perform and document system repair, repeat the calibration verification/LCS test (section 8.4), and re-analyze the affected samples. If a single internal standard is not within the 50% to 200% range, use an alternative internal standard for quantitation of the analyte referenced to the affected internal standard. It may be necessary to use the data system to calculate a new response factor from calibration data for the alternative internal standard/analyte pair. If an internal standard fails the 50–200% criteria and no analytes are detected in the sample, ignore the failure or report it if required by the regulatory/control authority.

8.8 As part of the QC program for the laboratory, control charts or statements of accuracy for wastewater samples must be assessed and records maintained periodically (see 40 CFR 136.7(c)(1)(viii)). After analysis of five or more spiked wastewater samples as in section 8.3, calculate the average percent recovery (P_X) and the standard deviation of the percent recovery (sp). Express the accuracy assessment as a percent interval from $P_X - 2_{sp}$ to $P_X + 2_{sp}$. For example, if P_X = 90% and sp = 10%, the accuracy interval is expressed as 70–110%. Update the accuracy assessment for each analyte on a regular basis (e.g., after each 5–10 new accuracy measurements). If desired, statements of accuracy for laboratory performance, independent of performance on samples, may be developed using LCSs.

8.9 It is recommended that the laboratory adopt additional quality assurance practices for use with this method. The specific practices that are most productive depend upon the needs of the laboratory and the nature of the samples. Field duplicates may be analyzed to assess the precision of environmental measurements. Whenever possible, the laboratory should analyze standard reference materials and participate in relevant performance evaluation studies.

9. Sample Collection, Preservation, and Handling

9.1 Collect the sample as a grab sample in a glass container having a total volume of at least 25 mL. Fill the sample bottle just to overflowing in such a manner that no air bubbles pass through the sample as the bottle is being filled. Seal the bottle so that no air bubbles are entrapped in it. If needed, collect additional sample(s) for the MS/MSD (section 8.3).

9.2 Ice or refrigerate samples at ≤6 °C from the time of collection until analysis, but do not freeze. If residual chlorine is present, add sodium thiosulfate preservative (10 mg/40 mL is sufficient for up to 5 ppm Cl_2) to the empty sample bottle just prior to shipping to the sampling site. Any method suitable for field use may be employed to test for residual chlorine (Reference 14). Field test kits are also available for this purpose. If sodium thiosulfate interferes in the determination of the analytes, an alternative preservative (e.g., ascorbic acid or sodium sulfite) may be used. If preservative has been added, shake the sample vigorously for one minute. Maintain the hermetic seal on the sample bottle until time of analysis.

9.3 If acrolein is to be determined, analyze the sample within 3 days. To extend the holding time to 14 days, acidify a separate sample to pH 4–5 with HCl using the procedure in section 9.7.

9.4 Experimental evidence indicates that some aromatic compounds, notably benzene,

toluene, and ethyl benzene are susceptible to rapid biological degradation under certain environmental conditions (Reference 3). Refrigeration alone may not be adequate to preserve these compounds in wastewaters for more than seven days. To extend the holding time for aromatic compounds to 14 days, acidify the sample to approximately pH 2 using the procedure in section 9.7.

9.5 If halocarbons are to be determined, either use the acidified aromatics sample in section 9.4 or acidify a separate sample to a pH of about 2 using the procedure in section 9.7.

9.6 The ethers listed in Table 2 are prone to hydrolysis at pH 2 when a heated purge is used. Aqueous samples should not be acid preserved if these ethers are of interest, or if the alcohols they would form upon hydrolysis are of interest and the ethers are anticipated to present.

9.7 Sample acidification—Collect about 500 mL of sample in a clean container and adjust the pH of the sample to 4–5 for acrolein (section 9.3), or to about 2 for the aromatic compounds (section 9.4) by adding 1+1 HCl while swirling or stirring. Check the pH with narrow range pH paper. Fill a sample container as described in section 9.1. Alternatively, fill a precleaned vial (section 5.1.1) that contains approximately 0.25 mL of 1+1 HCl with sample as in section 9.1. If preserved using this alternative procedure, the pH of the sample can be verified to be <2 after some of the sample is removed for analysis. Acidification will destroy 2-chloroethylvinyl ether; therefore, determine 2-chloroethylvinyl ether from the unacidified sample.

9.8 All samples must be analyzed within 14 days of collection (Reference 3), unless specified otherwise in sections 9.3–9.7.

10. Sample Purging and Gas Chromatography

10.1 The footnote to Table 3 gives the suggested GC column and operating conditions MDLs and MLs for many of the analytes are given in Table 1. Retention times for many of the analytes are given in Table 3. Sections 10.2 through 10.7 suggest procedures that may be used with a manual purge-and-trap system. Auto-samplers and other columns or chromatographic conditions may be used if requirements in this method are met. Prior to performing analyses, and between analyses, it may be necessary to bake the purge-and-trap and GC systems (section 3.3).

10.2 Attach the trap inlet to the purging device, and set the purge-and-trap system to purge. Open the syringe valve located on the purging device sample introduction needle.

10.3 Allow the sample to come to ambient temperature prior to pouring an aliquot into the syringe. Remove the plunger from a syringe and attach a closed syringe valve. Open the sample bottle (or standard) and carefully pour the sample into the syringe barrel to just short of overflowing. Replace the syringe plunger and compress the sample. Open the syringe valve and vent any residual air while adjusting the sample volume. Since this process of taking an aliquot destroys the validity of the sample for future analysis, the analyst should fill a second syringe at this time to protect against possible loss of data. Add the surrogate spiking solution (section 6.7) and internal standard spiking solution (section 7.3.1.3) through the valve bore, then close the valve. The surrogate and internal standards may be mixed and added as a single spiking solution. Autosamplers designed for purge-and-trap analysis of volatiles also may be used.

10.4 Attach the syringe valve assembly to the syringe valve on the purging device. Open the syringe valve and inject the sample into the purging chamber.

10.5 Close both valves and purge the sample at a temperature, flow rate, and duration sufficient to purge the less-volatile analytes onto the trap, yet short enough to prevent blowing the more-volatile analytes through the trap. The temperature, flow rate, and time should be determined by test. The same purge temperature, flow rate, and purge time must be used for all calibration, QC, and field samples.

10.6 After the purge, set the purge-and-trap system to the desorb mode, and begin the temperature program of the gas chromatograph. Introduce the trapped materials to the GC column by rapidly heating the trap to the desorb temperature while backflushing the trap with carrier gas at the flow rate and for the time necessary to desorb the analytes of interest. The optimum temperature, flow rate, and time should be determined by test. The same temperature, desorb time, and flow rate must be used for all calibration, QC, and field samples. If heating of the trap does not result in sharp peaks for the early eluting analytes, the GC column may be used as a secondary trap by cooling to an ambient or subambient temperature. To avoid carry-over and interferences, maintain the trap at the desorb temperature and flow rate until the analytes, interfering compounds, and excess water are desorbed. The optimum conditions should be determined by test.

10.7 Start MS data acquisition at the start of the desorb cycle and stop data collection when the analytes of interest, potentially interfering compounds, and water have eluted (see the footnote to Table 3 for conditions).

10.8 Cool the trap to the purge temperature and return the trap to the purge mode. When the trap is cool, the next sample can be analyzed.

11. Performance Tests

11.1 At the beginning of each 12-hour shift during which standards or samples will be

analyzed, perform the tests in sections 11.2–11.3 to verify system performance. Use the instrument operating conditions in the footnotes to Table 3 for these performance tests. Alternative conditions may be used so as long as all QC requirements are met.

11.2 BFB—Inject 50 ng of BFB solution directly on the column. Alternatively, add BFB to reagent water or an aqueous standard such that 50 ng or less of BFB will be introduced into the GC. Analyze according to section 10. Confirm that all criteria in section 7.3.2.2 and Table 4 are met. If all criteria are not met, perform system repair, retune the mass spectrometer, and repeat the test until all criteria are met.

11.3 Verify calibration with the LCS (section 8.4) after the criteria for BFB are met (Reference 15) and prior to analysis of a blank or sample. After verification, analyze a blank (section 8.5) to demonstrate freedom from contamination and carry-over at the MDL. Tests for BFB, the LCS, and the blank are outside of the 12-hour shift, and the 12-hour shift includes samples and matrix spikes and matrix spike duplicates (section 8.4). The total time for analysis of BFB, the LCS, the blank, and the 12-hour shift must not exceed 14 hours.

12. Qualitative Identification

12.1 Identification is accomplished by comparison of results from analysis of a sample or blank with data stored in the GC/MS data system (section 7.3.2.3). Identification of an analyte is confirmed per sections 12.1.1 through 12.1.4.

12.1.1 The signals for the quantitation and secondary m/z's stored in the data system (section 7.3.2.3) for each analyte of interest must be present and must maximize within the same two consecutive scans.

12.1.2 The retention time for the analyte should be within ± 10 seconds of the analyte in the LCS run at the beginning of the shift (section 8.4).

NOTE: Retention time windows other than ± 10 seconds may be appropriate depending on the performance of the gas chromatograph or observed retention time drifts due to certain types of matrix effects. Relative retention time (RRT) may be used as an alternative to absolute retention times if retention time drift is a concern. RRT is a unitless quantity (see section 20.2), although some procedures refer to ''RRT units'' in providing the specification for the agreement between the RRT values in the sample and the LCS or other standard. When significant retention time drifts are observed, dilutions or spiked samples may help the analyst determine the effects of the matrix on elution of the target analytes and to assist in qualitative identification.

12.1.3 Either the background corrected EICP areas, or the corrected relative intensities of the mass spectral peaks at the GC peak maximum, must agree within 50% to 200% (½ to 2 times) for the quantitation and secondary m/z's in the reference mass spectrum stored in the data system (section 7.3.2.3), or from a reference library. For example, if a peak has an intensity of 20% relative to the base peak, the analyte is identified if the intensity of the peak in the sample is in the range of 10% to 40% of the base peak.

12.1.4 If the acquired mass spectrum is contaminated, or if identification is ambiguous, an experienced spectrometrist (section 1.6) must determine the presence or absence of the compound.

12.2 Structural isomers that produce very similar mass spectra should be identified as individual isomers if they have sufficiently different gas chromatographic retention times. Sufficient gas chromatographic resolution is achieved if the height of the valley between two isomer peaks is less than 50% of the average of the two peak heights. Otherwise, structural isomers are identified as isomeric pairs. The resolution should be verified on the mid-point concentration of the initial calibration as well as the laboratory designated continuing calibration verification level if closely eluting isomers are to be reported.

13. Calculations

13.1 When an analyte has been identified, quantitation of that analyte is based on the integrated abundance from the EICP of the primary characteristic m/z in Table 5 or 6. Calculate the concentration using the response factor (RF) determined in section 7.3.3 and Equation 2. If a calibration curve was used, calculate the concentration using the regression equation for the curve. If the concentration of an analyte exceeds the calibration range, dilute the sample by the minimum amount to bring the concentration into the calibration range, and re-analyze. Determine a dilution factor (DF) from the amount of the dilution. For example, if the extract is diluted by a factor of 2, DF = 2.

$$C_s\ (\mu g/L) = \frac{A_s \times C_{is} \times DF}{A_{is} \times RF} \qquad \text{Equation 2}$$

Where:

C_s = Concentration of the analyte in the sample, and the other terms are as defined in Section 7.3.3.

13.2 Reporting of results

As noted in section 1.4.1, EPA has promulgated this method at 40 CFR part 136 for use in wastewater compliance monitoring under the National Pollutant Discharge Elimination System (NPDES). The data reporting practices described here are focused on such monitoring needs and may not be relevant to other uses of this method.

13.2.1 Report results for wastewater samples in µg/L without correction for recovery. (Other units may be used if required by a permit.) Report all QC data with the sample results.

13.2.2 Reporting level. Unless otherwise specified in by a regulatory authority or in a discharge permit, results for analytes that meet the identification criteria are reported down to the concentration of the ML established by the laboratory through calibration of the instrument (see section 7.3.2 and the glossary for the derivation of the ML). EPA considers the terms ''reporting limit,'' ''limit of quantitation,'' ''quantitation limit,'' and ''minimum level'' to be synonymous.

13.2.2.1 Report a result for each analyte in each field sample or QC standard at or above the ML to 3 significant figures. Report a result for each analyte found in each field sample or QC standard below the ML as ''<ML,'' where ML is the concentration of the analyte at the ML, or as required by the regulatory/control authority or permit. Report a result for each analyte in a blank at or above the MDL to 2 significant figures. Report a result for each analyte found in a blank below the MDL as ''<MDL,'' where MDL is the concentration of the analyte at the MDL, or as required by the regulatory/control authority or permit.

13.2.2.2 In addition to reporting results for samples and blanks separately, the concentration of each analyte in a blank associated with the sample may be subtracted from the result for that sample, but only if requested or required by a regulatory authority or in a permit. In this case, both the sample result and the blank result must be reported together.

13.2.2.3 Report a result for an analyte found in a sample that has been diluted at the least dilute level at which the area at the quantitation m/z is within the calibration range (*i.e.*, above the ML for the analyte) and the MS/MSD recovery and RPD are within their respective QC acceptance criteria (Table 7). This may require reporting results for some analytes from different analyses.

13.2.3 Results from tests performed with an analytical system that is not in control (*i.e.*, that does not meet acceptance criteria for any of the QC test in this method) must be documented and reported (e.g., as a qualifier on results), unless the failure is not required to be reported as determined by the regulatory/control authority. Results associated with a QC failure cannot be used to demonstrate regulatory compliance. QC failures do not relieve a discharger or permittee of reporting timely results. If the holding time would be exceeded for a re-analysis of the sample, the regulatory/control authority should be consulted for disposition.

14. Method Performance

14.1 This method was tested by 15 laboratories using reagent water, drinking water, surface water, and industrial wastewaters spiked at six concentrations over the range 5–600 µg/L (References 4 and 16). Single-operator precision, overall precision, and method accuracy were found to be directly related to the concentration of the analyte and essentially independent of the sample matrix. Linear equations to describe these relationships are presented in Table 8.

14.2 As noted in section 1.1, this method was validated through an interlaboratory study conducted in the early 1980s. However, the fundamental chemistry principles used in this method remain sound and continue to apply.

15. Pollution Prevention

15.1 Pollution prevention encompasses any technique that reduces or eliminates the quantity or toxicity of waste at the point of generation. Many opportunities for pollution prevention exist in laboratory operations. EPA has established a preferred hierarchy of environmental management techniques that places pollution prevention as the management option of first choice. Whenever feasible, the laboratory should use pollution prevention techniques to address waste generation. When wastes cannot be reduced at the source, the Agency recommends recycling as the next best option.

15.2 The analytes in this method are used in extremely small amounts and pose little threat to the environment when managed properly. Standards should be prepared in volumes consistent with laboratory use to minimize the disposal of excess volumes of expired standards.

15.3 For information about pollution prevention that may be applied to laboratories and research institutions, consult ''Less is Better: Laboratory Chemical Management for Waste Reduction,'' available from the American Chemical Society's Department of Governmental Relations and Science Policy, 1155 16th Street NW., Washington, DC 20036, 202–872–4477.

16. Waste Management

16.1 The laboratory is responsible for complying with all Federal, State, and local regulations governing waste management, particularly the hazardous waste identification rules and land disposal restrictions, and to protect the air, water, and land by minimizing and controlling all releases from fume hoods and bench operations. Compliance is also required with any sewage discharge permits and regulations. An overview of requirements can be found in Environmental Management Guide for Small Laboratories (EPA 233–B–98–001).

16.2 Samples at pH <2, or pH >12, are hazardous and must be handled and disposed of as hazardous waste, or neutralized and disposed of in accordance with all federal, state, and local regulations. It is the laboratory's responsibility to comply with all federal, state, and local regulations governing waste management, particularly the hazardous waste identification rules and land disposal restrictions. The laboratory using this method has the responsibility to protect the air, water, and land by minimizing and controlling all releases from fume hoods and bench operations. Compliance is also required with any sewage discharge permits and regulations. For further information on waste management, see ''The Waste Management Manual for Laboratory Personnel,'' also available from the American Chemical Society at the address in Section 15.3.

16.3 Many analytes in this method decompose above 500 °C. Low-level waste such as absorbent paper, tissues, and plastic gloves may be burned in an appropriate incinerator. Gross quantities of neat or highly concentrated solutions of toxic or hazardous chemicals should be packaged securely and disposed of through commercial or governmental channels that are capable of handling these types of wastes.

16.4 For further information on waste management, consult ''Waste Management Manual for Laboratory Personnel and Less is Better-Laboratory Chemical Management for Waste Reduction,'' available from the American Chemical Society's Department of Government Relations and Science Policy, 1155 16th Street NW., Washington, DC 20036, 202–872–4477.

17. References

1. Bellar, T.A. and Lichtenberg, J.J. ''Determining Volatile Organics at Microgram-per-Litre Levels by Gas Chromatography,'' Journal American Water Works Association, 66: 739 (1974).

2. ''Sampling and Analysis Procedures for Screening of Industrial Effluents for Priority Pollutants,'' U.S. Environmental Protection Agency, Environmental Monitoring and Support Laboratory, Cincinnati, Ohio 45268, March 1977, Revised April 1977.

3. Bellar, T.A. and Lichtenberg, J.J. ''Semi-Automated Headspace Analysis of Drinking Waters and Industrial Waters for Purgeable Volatile Organic Compounds,'' Measurement of Organic Pollutants in Water and Wastewater, C.E. Van Hall, editor, American Society for Testing and Materials, Philadelphia, PA. Special Technical Publication 686, 1978.

4. ''EPA Method Study 29 EPA Method 624-Purgeables,'' EPA 600/4–84–054, National Technical Information Service, PB84–209915, Springfield, Virginia 22161, June 1984.

5. 40 CFR part 136, appendix B.

6. ''Method Detection Limit for Methods 624 and 625,'' Olynyk, P., Budde, W.L., and Eichelberger, J.W. Unpublished report, May 14, 1980.

7. ''Carcinogens-Working With Carcinogens,'' Department of Health, Education, and Welfare, Public Health Service, Center for Disease Control, National Institute for Occupational Safety and Health, Publication No. 77–206, August 1977.

8. ''OSHA Safety and Health Standards, General Industry,'' (29 CFR part 1910), Occupational Safety and Health Administration, OSHA 2206 (Revised, January 1976).

9. ''Safety in Academic Chemistry Laboratories,'' American Chemical Society Publication, Committee on Chemical Safety, 7th Edition, 2003.

10. 40 CFR 136.6(b)(5)(x).

11. 40 CFR 136.6(b)(2)(i).

12. Protocol for EPA Approval of New Methods for Organic and Inorganic Analytes in Wastewater and Drinking Water (EPA–821–B–98–003) March 1999.

13. Provost, L.P. and Elder, R.S. ''Interpretation of Percent Recovery Data,'' American Laboratory, 15, 58–63 (1983).

14. 40 CFR 136.3(a), Table IB, Chlorine—Total residual.

15. Budde, W.L. and Eichelberger, J.W. ''Performance Tests for the Evaluation of Computerized Gas Chromatography/Mass Spectrometry Equipment and Laboratories,'' EPA–600/4–80–025, U.S. Environmental Protection Agency, Environmental Monitoring and Support Laboratory, Cincinnati, Ohio 45268, April 1980.

16. ''Method Performance Data for Method 624,'' Memorandum from R. Slater and T. Pressley, U.S. Environmental Protection Agency, Environmental Monitoring and Support Laboratory, Cincinnati, Ohio 45268, January 17, 1984.

18. Tables

TABLE 1—PURGEABLES [1]

Analyte	CAS Registry No.	MDL (μg/L) [2]	ML (μg/L) [3]
Acrolein	107–02–8		
Acrylonitrile	107–13–1		
Benzene	71–43–2	4.4	13.2
Bromodichloromethane	75–27–4	2.2	6.6
Bromoform	75–25–2	4.7	14.1
Bromomethane	74–83–9		
Carbon tetrachloride	56–23–5	2.8	8.4
Chlorobenzene	108–90–7	6.0	18.0
Chloroethane	75–00–3		
2-Chloroethylvinyl ether	110–75–8		
Chloroform	67–66–3	1.6	4.8
Chloromethane	74–87–3		
Dibromochloromethane	124–48–1	3.1	9.3
1,2-Dichlorobenzene	95–50–1		
1,3-Dichlorobenzene	541–73–1		
1,4-Dichlorobenzene	106–46–7		
1,1-Dichloroethane	75–34–3	4.7	14.1
1,2-Dichloroethane	107–06–2	2.8	8.4
1,1-Dichloroethene	75–35–4	2.8	8.4
trans-1,2-Dichloroethene	156–60–5	1.6	4.8
1,2-Dichloropropane	78–87–5	6.0	18.0
cis-1,3-Dichloropropene	10061–01–5	5.0	15.0
trans-1,3-Dichloropropene	10061–02–6		
Ethyl benzene	100–41–4	7.2	21.6
Methylene chloride	75–09–2	2.8	8.4
1,1,2,2-Tetrachloroethane	79–34–5	6.9	20.7
Tetrachloroethene	127–18–4	4.1	12.3
Toluene	108–88–3	6.0	18.0
1,1,1-Trichloroethane	71–55–6	3.8	11.4
1,1,2-Trichloroethane	79–00–5	5.0	15.0
Trichloroethene	79–01–6	1.9	5.7
Vinyl chloride	75–01–4		

[1] All the analytes in this table are Priority Pollutants (40 CFR part 423, appendix A).
[2] MDL values from the 1984 promulgated version of Method 624.
[3] ML = Minimum Level—see Glossary for definition and derivation.

TABLE 2—ADDITIONAL PURGEABLES

Analyte	CAS Registry
Acetone [1]	67–64–1
Acetonitrile [2]	75–05–8
Acrolein	107–02–8
Acrylonitrile	107–13–1
Allyl alcohol [1]	107–18–6
Allyl chloride	107–05–1
t-Amyl ethyl ether (TAEE)	919–94–8
t-Amyl methyl ether (TAME)	994–058
Benzyl chloride	100–44–7
Bromoacetone [2]	598–31–2
Bromobenzene	108–86–1
Bromochloromethane	74–97–5
1,3-Butadiene	106–99–0
n-Butanol [1]	71–36–3
2-Butanone (MEK) [1 2]	78–93–3
t-Butyl alcohol (TBA)	75–65–0
n-Butylbenzene	104–51–8
sec-Butylbenzene	135–98–8
t-Butylbenzene	98–06–6
t-Butyl ethyl ether (ETBE)	637–92–3
Carbon disulfide	75–15–0
Chloral hydrate [2]	302–17–0
Chloroacetonitrile [1]	107–14–2
1-Chlorobutane	109–69–3
Chlorodifluoromethane	75–45–6
2-Chloroethanol [2]	107–07–3
bis (2-Chloroethyl) sulfide [2]	505–60–2
1-Chlorohexanone	20261–68–1
Chloroprene (2-chloro-1,3-butadiene)	126–99–8
3-Chloropropene	107–05–1
3-Chloropropionitrile	542–76–7

TABLE 2—ADDITIONAL PURGEABLES—Continued

Analyte	CAS Registry
2-Chlorotoluene	95–49–8
4-Chlorotoluene	106–43–4
Crotonaldehyde [1 2]	123–73–9
Cyclohexanone	108–94–1
1,2-Dibromo-3-chloropropane	96–12–8
1,2-Dibromoethane	106–93–4
Dibromomethane	74–95–3
cis-1,4-Dichloro-2-butene	1476–11–5
trans-1,4-Dichloro-2-butene	110–57–6
cis-1,2-Dichloroethene	156–59–2
Dichlorodifluoromethane	75–71–8
1,3-Dichloropropane	142–28–9
2,2-Dichloropropane	590–20–7
1,3-Dichloro-2-propanol [2]	96–23–1
1,1-Dichloropropene	563–58–6
cis-1,3-Dichloropropene	10061–01–5
1:2,3:4-Diepoxybutane	1464–53–5
Diethyl ether	60–29–7
Diisopropyl ether (DIPE)	108–20–3
1,4-Dioxane [2]	123–91–1
Epichlorohydrin [2]	106–89–8
Ethanol [2]	64–17–5
Ethyl acetate [2]	141–78–6
Ethyl methacrylate	97–63–2
Ethylene oxide [2]	75–21–8
Hexachlorobutadiene	87–63–3
Hexachloroethane	67–72–1
2-Hexanone [2]	591–78–6
Iodomethane	74–88–4
Isobutyl alcohol [1]	78–83–1
Isopropylbenzene	98–82–8

TABLE 2—ADDITIONAL PURGEABLES—Continued

Analyte	CAS Registry
p-Isopropyltoluene	99–87–6
Methacrylonitrile [2]	126–98–7
Methanol [2]	67–56–1
Malonitrile [2]	109–77–3
Methyl acetate	79–20–9
Methyl acrylate	96–33–3
Methyl cyclohexane	108–87–2
Methyl iodide	74–88–4
Methyl methacrylate	78–83–1
4-Methyl-2-pentanone (MIBK) [2]	108–10–1
Methyl-*t*-butyl ether (MTBE)	1634–04–4
Naphthalene	91–20–3
Nitrobenzene	98–95–3
N-Nitroso-di-*n*-butylamine [2]	924–16–3
2-Nitropropane	79–46–9
Paraldehyde [2]	123–63–7
Pentachloroethane [2]	76–01–7
Pentafluorobenzene	363–72–4
2-Pentanone [2]	107–19–7
2-Picoline [2]	109–06–8
1-Propanol [1]	71–23–8
2-Propanol [1]	67–63–0
Propargyl alcohol [2]	107–19–7
beta-Propiolactone [2]	57–58–8
Propionitrile (ethyl cyanide) [1]	107–12–0
n-Propylamine	107–10–8
n-Propylbenzene	103–65–1
Pyridine [2]	110–86–1
Styrene	100–42–5
1,1,1,2-Tetrachloroethane	630–20–6
Tetrahydrofuran	109–99–9
o-Toluidine [2]	95–53–4
1,2,3-Trichlorobenzene	87–61–6
Trichlorofluoromethane	75–69–4
1,2,3-Trichloropropane	96–18–4
1,2,3-Trimethylbenzene	526–73–8
1,2,4-Trimethylbenzene	95–63–6
1,3,5-Trimethylbenzene	108–67–8
Vinyl acetate	108–05–4
m-Xylene [3]	108–38–3
o-Xylene [3]	95–47–6
p-Xylene [3]	106–42–3
m+*o*-Xylene [3]	179601–22–0
m+*p*-Xylene [3]	179601–23–1
o+*p*-Xylene [3]	136777–61–2

[1] Determined at a purge temperature of 80 °C.
[2] May be detectable at a purge temperature of 80 °C.
[3] Determined in combination separated by GC column. Most GC columns will resolve *o*-xylene from *m*+*p*-xylene. Report using the CAS number for the individual xylene or the combination, as determined.

TABLE 3—EXAMPLE RETENTION TIMES

Analyte	Retention time (min)
Chloromethane	3.68
Vinyl chloride	3.92
Bromomethane	4.50
Chloroethane	4.65
Trichlorofluoromethane	5.25
Diethyl ether	5.88
Acrolein	6.12
1,1-Dichloroethene	6.30
Acetone	6.40
Iodomethane	6.58
Carbon disulfide	6.72
3-Chloropropene	6.98
Methylene chloride	7.22
Acrylonitrile	7.63
trans-1,2-Dichloroethene	7.73

TABLE 3—EXAMPLE RETENTION TIMES—Continued

Analyte	Retention time (min)
1,1-Dichloroethane	8.45
Vinyl acetate	8.55
Allyl alcohol	8.58
2-Chloro-1,3-butadiene	8.65
Methyl ethyl ketone	9.50
cis-1,2-Dichloroethene	9.50
Ethyl cyanide	9.57
Methacrylonitrile	9.83
Chloroform	10.05
1,1,1-Trichloroethane	10.37
Carbon tetrachloride	10.70
Isobutanol	10.77
Benzene	10.98
1,2-Dichloroethane	11.00
Crotonaldehyde	11.45
Trichloroethene	12.08
1,2-Dichloropropane	12.37
Methyl methacrylate	12.55
p-Dioxane	12.63
Dibromomethane	12.65
Bromodichloromethane	12.95
Chloroacetonitrile	13.27
2-Chloroethylvinyl ether	13.45
cis-1,3-Dichloropropene	13.65
4-Methyl-2-pentanone	13.83
Toluene	14.18
trans-1,3-Dichloropropene	14.57
Ethyl methacrylate	14.70
1,1,2-Trichloroethane	14.93
1,3-Dichloropropane	15.18
Tetrachloroethene	15.22
2-Hexanone	15.30
Dibromochloromethane	15.68
1,2-Dibromoethane	15.90
Chlorobenzene	16.78
Ethylbenzene	16.82
1,1,1,2-Tetrachloroethane	16.87
m+*p*-Xylene	17.08
o-Xylene	17.82
Bromoform	18.27
Bromofluorobenzene	18.80
1,1,2,2-Tetrachloroethane	18.98
1,2,3-Trichloropropane	19.08
trans-1,4-Dichloro-2-butene	19.12

Column: 75 m x 0.53 mm ID x 3.0 μm wide-bore DB–624
Conditions: 40 °C for 4 min, 9 °C/min to 200 °C, 20 °C/min (or higher) to 250 °C, hold for 20 min at 250 °C to remove water.
Carrier gas flow rate: 6–7 mL/min at 40 °C.
Inlet split ratio: 3:1.
Interface split ratio: 7:2.

TABLE 4—BFB KEY m/z ABUNDANCE CRITERIA [1]

m/z	Abundance criteria
50	15–40% of m/z 95.
75	30–60% of m/z 95.
95	Base Peak, 100% Relative Abundance.
96	5–9% of m/z 95.
173	<2% of m/z 174.
174	>50% of m/z 95.
175	5–9% of m/z 174.
176	>95% but <101% of m/z 174.

TABLE 4—BFB KEY m/z ABUNDANCE CRITERIA [1]—Continued

m/z	Abundance criteria
177	5–9% of m/z 176.

[1] Abundance criteria are for a quadrupole mass spectrometer. Alternative tuning criteria from other published EPA reference methods may be used, provided method performance is not adversely affected. Alternative tuning criteria specified by an instrument manufacturer may also be used for another type of mass spectrometer, or for an alternative carrier gas, provided method performance is not adversely affected.

TABLE 5—SUGGESTED SURROGATE AND INTERNAL STANDARDS

Analyte	Retention time (min) [1]	Primary m/z	Secondary m/z's
Benzene-d_6	10.95	84	
4-Bromofluorobenzene	18.80	95	174, 176
Bromochloromethane	9.88	128	49, 130, 51
2-Bromo-1-chloropropane	14.80	77	79, 156
2-Butanone-d_5	9.33	77	
Chloroethane-d_5	4.63	71	
Chloroform-^{13}C	10.00	86	
1,2-Dichlorobenzene-d_4	.....	152	
1,4-Dichlorobutane	18.57	55	90, 92
1,2-Dichloroethane-d_4	10.88	102	
1,1-Dichloroethene-d_2	6.30	65	
1,2-Dichloropropane-d_6	12.27	67	
trans-1,3-Dichloropropene-d_4	14.50	79	
1,4-Difluorobenzene	.....	114	63, 88
Ethylbenzene-d_{10}	16.77	98	
Fluorobenzene	.....	96	70
2-Hexanone-d_5	15.30	63	
Pentafluorobenzene	.....	168	
1,1,2,2-Tetrachloroethane-d_2	18.93	84	
Toluene-d_8	14.13	100	
Vinyl chloride-d_3	3.87	65	

[1] For chromatographic conditions, see the footnote to Table 3.

TABLE 6—CHARACTERISTIC m/z's FOR PURGEABLE ORGANICS

Analyte	Primary m/z	Secondary m/z's
Acrolein	56	55 and 58.
Acrylonitrile	53	52 and 51.
Chloromethane	50	52.
Bromomethane	94	96.
Vinyl chloride	62	64.
Chloroethane	64	66.
Methylene chloride	84	49, 51, and 86.
Trichlorofluoromethane	101	103.
1,1-Dichloroethene	96	61 and 98.
1,1-Dichloroethane	63	65, 83, 85, 98, and 100.
trans-1,2-Dichloroethene	96	61 and 98.
Chloroform	83	85.
1,2-Dichloroethane	98	62, 64, and 100.
1,1,1-Trichloroethane	97	99, 117, and 119.
Carbon tetrachloride	117	119 and 121.
Bromodichloromethane	83	127, 85, and 129.
1,2-Dichloropropane	63	112, 65, and 114.
trans-1,3-Dichloropropene	75	77.
Trichloroethene	130	95, 97, and 132.
Benzene	78	
Dibromochloromethane	127	129, 208, and 206.
1,1,2-Trichloroethane	97	83, 85, 99, 132, and 134.
cis-1,3-Dichloropropene	75	77.
2-Chloroethylvinyl ether	106	63 and 65.
Bromoform	173	171, 175, 250, 252, 254, and 256.
1,1,2,2-Tetrachloroethane	168	83, 85, 131, 133, and 166.
Tetrachloroethene	164	129, 131, and 166.
Toluene	92	91.
Chlorobenzene	112	114.

TABLE 6—CHARACTERISTIC m/z's FOR PURGEABLE ORGANICS—Continued

Analyte	Primary m/z	Secondary m/z's
Ethyl benzene	106	91.
1,3-Dichlorobenzene	146	148 and 111.
1,2-Dichlorobenzene	146	148 and 111.
1,4-Dichlorobenzene	146	148 and 111.

TABLE 7—LCS (Q), DOC (s AND $\overline{X}$), AND MS/MSD (P AND RPD) ACCEPTANCE CRITERIA [1]

Analyte	Range for Q (%)	Limit for s (%)	Range for $\overline{X}$ (%)	Range for P_1, P_2 (%)	Limit for RPD
Acrolein	60–140	30	50–150	40–160	60
Acrylonitrile	60–140	30	50–150	40–160	60
Benzene	65–135	33	75–125	37–151	61
Benzene-d_6	.....	.....	.....		
Bromodichloromethane	65–135	34	50–140	35–155	56
Bromoform	70–130	25	57–156	45–169	42
Bromomethane	15–185	90	D–206	D–242	61
2-Butanone-d_5	.....	.....	.....		
Carbon tetrachloride	70–130	26	65–125	70–140	41
Chlorobenzene	65–135	29	82–137	37–160	53
Chloroethane	40–160	47	42–202	14–230	78
Chloroethane-d_5	.....	.....	.....		
2-Chloroethylvinyl ether	D–225	130	D–252	D–305	71
Chloroform	70–135	32	68–121	51–138	54
Chloroform-^{13}C	.....	.....	.....		
Chloromethane	D–205	472	D–230	D–273	60
Dibromochloromethane	70–135	30	69–133	53–149	50
1,2-Dichlorobenzene	65–135	31	59–174	18–190	57
1,2-Dichlorobenzene-d_4	.....	.....	.....		
1,3-Dichlorobenzene	70–130	24	75–144	59–156	43
1,4-Dichlorobenzene	65–135	31	59–174	18–190	57
1,1-Dichloroethane	70–130	24	71–143	59–155	40
1,2-Dichloroethane	70–130	29	72–137	49–155	49
1,2-Dichloroethane-d_4	.....	.....	.....		
1,1-Dichloroethene	50–150	40	19–212	D–234	32
1,1-Dichloroethene-d_2	.....	.....	.....		
trans-1,2-Dichloroethene	70–130	27	68–143	54–156	45
1,2-Dichloropropane	35–165	69	19–181	D–210	55
1,2-Dichloropropane-d_6	.....	.....	.....		
cis-1,3-Dichloropropene	25–175	79	5–195	D–227	58
trans-1,3-Dichloropropene	50–150	52	38–162	17–183	86
trans-1,3-Dichloropropene-d_4	.....	.....	.....		
Ethyl benzene	60–140	34	75–134	37–162	63
2-Hexanone-d_5	.....	.....	.....		
Methylene chloride	60–140	192	D–205	D–221	28
1,1,2,2-Tetrachloroethane	60–140	36	68–136	46–157	61
1,1,2,2-Tetrachloroethane-d_2	.....	.....	.....		
Tetrachloroethene	70–130	23	65–133	64–148	39
Toluene	70–130	22	75–134	47–150	41
Toluene-d_8	.....	.....	.....		
1,1,1-Trichloroethane	70–130	21	69–151	52–162	36
1,1,2-Trichloroethane	70–130	27	75–136	52–150	45
Trichloroethene	65–135	29	75–138	70–157	48
Trichlorofluoromethane	50–150	50	45–158	17–181	84
Vinyl chloride	5–195	100	D–218	D–251	66
Vinyl chloride-d_3.					

[1] Criteria were calculated using an LCS concentration of 20 µg/L.
Q = Percent recovery in calibration verification/LCS (section 8.4).
s = Standard deviation of percent recovery for four recovery measurements (section 8.2.4).
$\overline{X}$ = Average percent recovery for four recovery measurements (section 8.2.4).
P = Percent recovery for the MS or MSD (section 8.3.3).
D = Detected; result must be greater than zero.

Notes:

1. Criteria for pollutants are based upon the method performance data in Reference 4. Where necessary, limits have been broadened to assure applicability to concentrations below those used to develop Table 7.
2. Criteria for surrogates are from EPA CLP SOM01.2D.

TABLE 8—RECOVERY AND PRECISION AS FUNCTIONS OF CONCENTRATION

Analyte	Recovery, X′ (μg/L)	Single analyst precision, s_r' (μg/L)	Overall precision, S′ (μg/L)
Benzene	0.93C+2.00	20.26 $\bar{X}$ − 1.74	0.25 $\bar{X}$ − 1.33
Bromodichloromethane	1.03C − 1.58	0.15 $\bar{X}$+0.59	0.20 $\bar{X}$+1.13
Bromoform	1.18C − 2.35	0.12 $\bar{X}$+0.36	0.17 $\bar{X}$+1.38
Bromomethane [a]	1.00C	0.43 $\bar{X}$	0.58 $\bar{X}$
Carbon tetrachloride	1.10C − 1.68	0.12 $\bar{X}$+0.25	0.11 $\bar{X}$+0.37
Chlorobenzene	0.98C+2.28	0.16 $\bar{X}$ − 0.09	0.26 $\bar{X}$ − 1.92
Chloroethane	1.18C+0.81	0.14 $\bar{X}$+2.78	0.29 $\bar{X}$+1.75
2-Chloroethylvinyl ether [a]	1.00C	0.62 $\bar{X}$	0.84 $\bar{X}$
Chloroform	0.93C+0.33	0.16 $\bar{X}$+0.22	0.18 $\bar{X}$+0.16
Chloromethane	1.03C+0.81	0.37 $\bar{X}$+2.14	0.58 $\bar{X}$+0.43
Dibromochloromethane	1.01C − 0.03	0.17 $\bar{X}$ − 0.18	0.17 $\bar{X}$+0.49
1,2-Dichlorobenzene [b]	0.94C+4.47	0.22 $\bar{X}$ − 1.45	0.30 $\bar{X}$ − 1.20
1,3-Dichlorobenzene	1.06C+1.68	0.14 $\bar{X}$ − 0.48	0.18 $\bar{X}$ − 0.82
1,4-Dichlorobenzene [b]	0.94C+4.47	0.22 $\bar{X}$ − 1.45	0.30 $\bar{X}$ − 1.20
1,1-Dichloroethane	1.05C+0.36	0.13 $\bar{X}$ − 0.05	0.16 $\bar{X}$+0.47
1,2-Dichloroethane	1.02C+0.45	0.17 $\bar{X}$ − 0.32	0.21 $\bar{X}$ − 0.38
1,1-Dichloroethene	1.12C+0.61	0.17 $\bar{X}$+1.06	0.43 $\bar{X}$ − 0.22
trans-1,2,-Dichloroethene	1.05C+0.03	0.14 $\bar{X}$ − +0.09	0.19 $\bar{X}$ − +0.17
1,2-Dichloropropane [a]	1.00C	0.33 $\bar{X}$	0.45 $\bar{X}$
cis-1,3-Dichloropropene [a]	1.00C	0.38 $\bar{X}$	0.52 $\bar{X}$
trans-1,3-Dichloropropene [a]	1.00C	0.25 $\bar{X}$	0.34 $\bar{X}$
Ethyl benzene	0.98C+2.48	0.14 $\bar{X}$+1.00	0.26 $\bar{X}$ − 1.72
Methylene chloride	0.87C+1.88	0.15 $\bar{X}$+1.07	0.32 $\bar{X}$+4.00
1,1,2,2-Tetrachloroethane	0.93C+1.76	0.16 $\bar{X}$+0.69	0.20 $\bar{X}$+0.41
Tetrachloroethene	1.06C+0.60	0.13 $\bar{X}$ − 0.18	0.16 $\bar{X}$ − 0.45
Toluene	0.98C+2.03	0.15 $\bar{X}$ − 0.71	0.22 $\bar{X}$ − 1.71
1,1,1-Trichloroethane	1.06C+0.73	0.12 $\bar{X}$ − 0.15	0.21 $\bar{X}$ − 0.39
1,1,2-Trichloroethane	0.95C+1.71	0.14 $\bar{X}$+0.02	0.18 $\bar{X}$+0.00
Trichloroethene	1.04C+2.27	0.13 $\bar{X}$+0.36	0.12 $\bar{X}$+0.59
Trichlorofluoromethane	0.99C+0.39	0.33 $\bar{X}$ − 1.48	0.34 $\bar{X}$ − 0.39
Vinyl chloride	1.00C	0.48 $\bar{X}$	0.65 $\bar{X}$

$\bar{X}'$ = Expected recovery for one or more measurements of a sample containing a concentration of C, in μg/L.
S_r' = Expected single analyst standard deviation of measurements at an average concentration found of $\bar{X}$, in μg/L.
S′ = Expected interlaboratory standard deviation of measurements at an average concentration found of $\bar{X}$, in μg/L.
C = True value for the concentration, in μg/L.
$\bar{X}$ = Average recovery found for measurements of samples containing a concentration of C, in μg/L.
[a] Estimates based upon the performance in a single laboratory (References 4 and 16).
[b] Due to coelutions, performance statements for these isomers are based upon the sums of their concentrations.

19. Glossary

These definitions and purposes are specific to this method, but have been conformed to common usage to the extent possible.

19.1 Units of weight and measure and their abbreviations.

19.1.1 Symbols.

°C degrees Celsius
μg microgram
μL microliter
< less than
> greater than
% percent

19.1.2 Abbreviations (in alphabetical order).

cm centimeter
g gram
h hour
ID inside diameter
in. inch
L liter
m mass
mg milligram
min minute
mL milliliter
mm millimeter
ms millisecond
m/z mass-to-charge ratio
N normal; gram molecular weight of solute divided by hydrogen equivalent of solute, per liter of solution
ng nanogram
pg picogram
ppb part-per-billion
ppm part-per-million
ppt part-per-trillion
psig pounds-per-square inch gauge
v/v volume per unit volume
w/v weight per unit volume

19.2 Definitions and acronyms (in alphabetical order).

Analyte—A compound tested for by this method. The analytes are listed in Tables 1 and 2.

Analyte of interest—An analyte of interest is an analyte required to be determined by a regulatory/control authority or in a permit, or by a client.

Analytical batch—The set of samples analyzed on a given instrument during a 12-hour period that begins with analysis of a calibration verification/LCS. See section 8.4.

Blank—An aliquot of reagent water that is treated exactly as a sample including exposure to all glassware, equipment, solvents, reagents, internal standards, and surrogates that are used with samples. The blank is used to determine if analytes or interferences are present in the laboratory environment, the reagents, or the apparatus. See section 8.5.

Calibration—The process of determining the relationship between the output or response of a measuring instrument and the value of an input standard. Historically, EPA has referred to a multi-point calibration as the ''initial calibration,'' to differentiate it from a single-point calibration verification.

Calibration standard—A solution prepared from stock solutions and/or a secondary standards and containing the analytes of interest, surrogates, and internal standards. The calibration standard is used to calibrate the response of the GC/MS instrument against analyte concentration.

Calibration verification standard—The laboratory control sample (LCS) used to verify calibration. See Section 8.4.

Descriptor—In SIM, the beginning and ending retention times for the RT window, the m/z's sampled in the RT window, and the dwell time at each m/z.

Extracted ion current profile (EICP)—The line described by the signal at a given m/z.

Field duplicates—Two samples collected at the same time and place under identical conditions, and treated identically throughout field and laboratory procedures. Results of analyses of field duplicates provide an estimate of the precision associated with sample collection, preservation, and storage, as well as with laboratory procedures.

Field blank—An aliquot of reagent water or other reference matrix that is placed in a sample container in the field, and treated as a sample in all respects, including exposure to sampling site conditions, storage, preservation, and all analytical procedures. The purpose of the field blank is to determine if the field or sample transporting procedures and environments have contaminated the sample.

GC—Gas chromatograph or gas chromatography.

Internal standard—A compound added to a sample in a known amount and used as a reference for quantitation of the analytes of interest and surrogates. Internal standards are listed in Table 5. Also see Internal standard quantitation.

Internal standard quantitation—A means of determining the concentration of an analyte of interest (Tables 1 and 2) by reference to a compound added to a sample and not expected to be found in the sample.

DOC—Initial demonstration of capability (DOC; section 8.2); four aliquots of reagent water spiked with the analytes of interest and analyzed to establish the ability of the laboratory to generate acceptable precision and recovery. A DOC is performed prior to the first time this method is used and any time the method or instrumentation is modified.

Laboratory control sample (LCS; laboratory fortified blank (LFB); on-going precision and recovery sample; OPR)—An aliquot of reagent water spiked with known quantities of the analytes of interest and surrogates. The LCS is analyzed exactly like a sample. Its purpose is to assure that the results produced by the laboratory remain within the limits specified in this method for precision and recovery. In this method, the LCS is synonymous with a calibration verification sample (See sections 7.4 and 8.4).

Laboratory fortified sample matrix—See Matrix spike.

Laboratory reagent blank—See Blank.

Matrix spike (MS) and matrix spike duplicate (MSD) (laboratory fortified sample matrix and duplicate)—Two aliquots of an environmental sample to which known quantities of the analytes of interest and surrogates are added in the laboratory. The MS/MSD are prepared and analyzed exactly like a field sample. Their purpose is to quantify any additional bias and imprecision caused by the sample matrix. The background concentrations of the analytes in the sample matrix must be determined in a separate aliquot and the measured values in the MS/MSD corrected for background concentrations.

May—This action, activity, or procedural step is neither required nor prohibited.

May not—This action, activity, or procedural step is prohibited.

Method blank (laboratory reagent blank)—See Blank.

Method detection limit (MDL)—A detection limit determined by the procedure at 40 CFR part 136, appendix B. The MDLs determined by EPA in the original version of the method are listed in Table 1. As noted in Sec. 1.4, use the MDLs in Table 1 in conjunction with current MDL data from the laboratory actually analyzing samples to assess the sensitivity of this procedure relative to project objectives and regulatory requirements (where applicable).

Minimum level (ML)—The term ''minimum level'' refers to either the sample concentration equivalent to the lowest calibration point in a method or a multiple of the method detection limit (MDL), whichever is higher. Minimum levels may be obtained in several ways: They may be published in a method; they may be based on the lowest acceptable calibration point used by a laboratory; or they may be calculated by multiplying the MDL in a method, or the MDL determined by a laboratory, by a factor of 3. For the purposes of NPDES compliance monitoring, EPA considers the following terms to

be synonymous: ''quantitation limit,'' ''reporting limit,'' and ''minimum level.''

MS—Mass spectrometer or mass spectrometry.

Must—This action, activity, or procedural step is required.

m/z—The ratio of the mass of an ion (m) detected in the mass spectrometer to the charge (z) of that ion.

Quality control sample (QCS)—A sample containing analytes of interest at known concentrations. The QCS is obtained from a source external to the laboratory or is prepared from standards obtained from a different source than the calibration standards.

The purpose is to check laboratory performance using test materials that have been prepared independent of the normal preparation process.

Reagent water—Water demonstrated to be free from the analytes of interest and potentially interfering substances at the MDLs for the analytes in this method.

Regulatory compliance limit (or regulatory concentration limit)—A limit on the concentration or amount of a pollutant or contaminant specified in a nationwide standard, in a permit, or otherwise established by a regulatory/control authority.

Relative retention time (RRT)—The ratio of the retention time of an analyte to the retention time of its associated internal standard. RRT compensates for small changes in the GC temperature program that can affect the absolute retention times of the analyte and internal standard. RRT is a unitless quantity.

Relative standard deviation (RSD)—The standard deviation times 100 divided by the mean. Also termed ''coefficient of variation.''

RF—Response factor. See section 7.3.3.

RSD—See relative standard deviation.

Safety Data Sheet (SDS)—Written information on a chemical's toxicity, health hazards, physical properties, fire, and reactivity, including storage, spill, and handling precautions that meet the requirements of OSHA, 29 CFR 1910.1200(g) and appendix D to §1910.1200. United Nations Globally Harmonized System of Classification and Labelling of Chemicals (GHS), third revised edition, United Nations, 2009.

Selected Ion Monitoring (SIM)—An MS technique in which a few m/z's are monitored. When used with gas chromatography, the m/z's monitored are usually changed periodically throughout the chromatographic run to correlate with the characteristic m/z's for the analytes, surrogates, and internal standards as they elute from the chromatographic column. The technique is often used to increase sensitivity and minimize interferences.

Signal-to-noise ratio (S/N)—The height of the signal as measured from the mean (average) of the noise to the peak maximum divided by the width of the noise.

SIM—See Selection Ion Monitoring.

Should—This action, activity, or procedural step is suggested but not required.

Stock solution—A solution containing an analyte that is prepared using a reference material traceable to EPA, the National Institute of Science and Technology (NIST), or a source that will attest to the purity and authenticity of the reference material.

Surrogate—A compound unlikely to be found in a sample, and which is spiked into sample in a known amount before purge-and-trap. The surrogate is quantitated with the same procedures used to quantitate the analytes of interest. The purpose of the surrogate is to monitor method performance with each sample.

VOA—Volatile organic analysis: e.g., the analysis performed by this method.

METHOD 625.1—BASE/NEUTRALS AND ACIDS BY GC/MS

1. Scope and Application

1.1 This method is for determination of semivolatile organic pollutants in industrial discharges and other environmental samples by gas chromatography combined with mass spectrometry (GC/MS), as provided under 40 CFR 136.1. This revision is based on a previous protocol (Reference 1), on the basic revision promulgated October 26, 1984, and on an interlaboratory method validation study (Reference 2). Although this method was validated through an interlaboratory study conducted in the early 1980s, the fundamental chemistry principles used in this method remain sound and continue to apply.

1.2 The analytes that may be qualitatively and quantitatively determined using this method and their CAS Registry numbers are listed in Tables 1 and 2. The method may be extended to determine the analytes listed in Table 3; however, extraction or gas chromatography of some of these analytes may make quantitative determination difficult. For example, benzidine is subject to oxidative losses during extraction and/or solvent concentration. Under the alkaline conditions of the extraction, *alpha*-BHC, *gamma*-BHC, endosulfan I and II, and endrin are subject to decomposition. Hexachlorocyclopentadiene is subject to thermal decomposition in the inlet of the gas chromatograph, chemical reaction in acetone solution, and photochemical decomposition. N-nitrosodiphenylamine and other nitrosoamines may decompose in the gas chromatographic inlet. The sample may be extracted at neutral pH if necessary to overcome these or other decomposition problems that could occur at alkaline or acidic pH. EPA also has provided other methods (e.g., Method 607—Nitrosamines) that may be used for determination of some of these analytes.

EPA encourages use of Method 625.1 to determine additional compounds amenable to extraction and GC/MS.

1.3 The large number of analytes in Tables 1–3 of this method makes testing difficult if all analytes are determined simultaneously. Therefore, it is necessary to determine and perform quality control (QC) tests for the ''analytes of interest'' only. Analytes of interest are those required to be determined by a regulatory/control authority or in a permit, or by a client. If a list of analytes is not specified, the analytes in Tables 1 and 2 must be determined, at a minimum, and QC testing must be performed for these analytes. The analytes in Tables 1 and 2, and some of the analytes in Table 3 have been identified as Toxic Pollutants (40 CFR 401.15), expanded to a list of Priority Pollutants (40 CFR part 423, appendix A).

1.4 In this revision to Method 625, the pesticides and polychlorinated biphenyls (PCBs) have been moved from Table 1 to Table 3 (Additional Analytes) to distinguish these analytes from the analytes required in quality control tests (Tables 1 and 2). QC acceptance criteria for pesticides and PCBs have been retained in Table 6 and may continue to be applied if desired, or if requested or required by a regulatory/control authority or in a permit. Method 608.3 should be used for determination of pesticides and PCBs. However, if pesticides and/or PCBs are to be determined, an additional sample must be collected and extracted using the pH adjustment and extraction procedures specified in Method 608.3. Method 1668C may be useful for determination of PCBs as individual chlorinated biphenyl congeners, and Method 1699 may be useful for determination of pesticides. At the time of writing of this revision, Methods 1668C and 1699 had not been approved for use at 40 CFR part 136. The screening procedure for 2,3,7,8-tetrachlorodibenzo-*p*-dioxin (2,3,7,8-TCDD) contained in the version of Method 625 promulgated October 26, 1984 has been replaced with procedures for selected ion monitoring (SIM), and 2,3,7,8-TCDD may be determined using the SIM procedures. However, EPA Method 613 or 1613B should be used for analyte-specific determination of 2,3,7,8-TCDD because of the focus of these methods on this compound. Methods 613 and 1613B are approved for use at 40 CFR part 136.

1.5 Method detection limits (MDLs; Reference 3) for the analytes in Tables 1, 2, and 3 are listed in those tables. These MDLs were determined in reagent water (Reference 4). Advances in analytical technology, particularly the use of capillary (open-tubular) columns, allowed laboratories to routinely achieve MDLs for the analytes in this method that are 2–10 times lower than those in the version promulgated in 1984. The MDL for an analyte in a specific wastewater may differ from those listed, depending upon the nature of interferences in the sample matrix.

1.5.1 EPA has promulgated this method at 40 CFR part 136 for use in wastewater compliance monitoring under the National Pollutant Discharge Elimination System (NPDES). The data reporting practices described in section 15.2 are focused on such monitoring needs and may not be relevant to other uses of the method.

1.5.2 This method includes ''reporting limits'' based on EPA's ''minimum level'' (ML) concept (see the glossary in section 22). Tables 1, 2, and 3 contain MDL values and ML values for many of the analytes.

1.6 This method is performance-based. It may be modified to improve performance (e.g., to overcome interferences or improve the accuracy of results) provided all performance requirements are met.

1.6.1 Examples of allowed method modifications are described at 40 CFR 136.6. Other examples of allowed modifications specific to this method, including solid-phase extraction (SPE) are described in section 8.1.2.

1.6.2 Any modification beyond those expressly permitted at 40 CFR 136.6 or in section 8.1.2 of this method shall be considered a major modification subject to application and approval of an alternate test procedure under 40 CFR 136.4 and 136.5.

1.6.3 For regulatory compliance, any modification must be demonstrated to produce results equivalent or superior to results produced by this method when applied to relevant wastewaters (section 8.3).

1.7 This method is restricted to use by or under the supervision of analysts experienced in the use of a gas chromatograph/mass spectrometer and in the interpretation of mass spectra. Each laboratory that uses this method must demonstrate the ability to generate acceptable results using the procedure in Section 8.2.

1.8 Terms and units of measure used in this method are given in the glossary at the end of the method.

2. Summary of Method

2.1 A measured volume of sample, sufficient to meet an MDL or reporting limit, is serially extracted with methylene chloride at pH 11–13 and again at a pH less than 2 using a separatory funnel or continuous liquid/liquid extractor.

2.2 The extract is concentrated to a volume necessary to meet the required compliance or detection limit, and analyzed by GC/MS. Qualitative identification of an analyte in the extract is performed using the retention time and the relative abundance of two or more characteristic masses (m/z's). Quantitative analysis is performed using the internal standard technique with a single characteristic m/z.

3. Contamination and Interferences

3.1 Solvents, reagents, glassware, and other sample processing labware may yield artifacts, elevated baselines, or matrix interferences causing misinterpretation of chromatograms and mass spectra. All materials used in the analysis must be demonstrated to be free from contamination and interferences by analyzing blanks initially and with each extraction batch (samples started through the extraction process in a given 24-hour period, to a maximum of 20 samples—see Glossary for detailed definition), as described in Section 8.5. Specific selection of reagents and purification of solvents by distillation in all-glass systems may be required. Where possible, labware is cleaned by extraction or solvent rinse, or baking in a kiln or oven.

3.2 Glassware must be scrupulously cleaned (Reference 5). Clean all glassware as soon as possible after use by rinsing with the last solvent used in it. Solvent rinsing should be followed by detergent washing with hot water, and rinses with tap water and reagent water. The glassware should then be drained dry, and heated at 400 °C for 15–30 minutes. Some thermally stable materials, such as PCBs, may require higher temperatures and longer baking times for removal. Solvent rinses with pesticide quality acetone, hexane, or other solvents may be substituted for heating. Do not heat volumetric labware above 90 °C. After drying and cooling, store inverted or capped with solvent-rinsed or baked aluminum foil in a clean environment to prevent accumulation of dust or other contaminants.

3.3 Matrix interferences may be caused by contaminants co-extracted from the sample. The extent of matrix interferences will vary considerably from source to source, depending upon the nature and diversity of the industrial complex or municipality being sampled. Interferences extracted from samples high in total organic carbon (TOC) may result in elevated baselines, or by enhancing or suppressing a signal at or near the retention time of an analyte of interest. Analyses of the matrix spike and duplicate (section 8.3) may be useful in identifying matrix interferences, and gel permeation chromatography (GPC; Section 11.1) and sulfur removal (section 11.2) may aid in eliminating these interferences. EPA has provided guidance that may aid in overcoming matrix interferences (Reference 6).

3.4 In samples that contain an inordinate number of interferences, the use of chemical ionization (CI) or triple quadrupole (MRM) mass spectrometry may make identification easier. Tables 4 and 5 give characteristic CI and MRM m/z's for many of the analytes covered by this method. The use of CI or MRM mass spectrometry may be utilized to support electron ionization (EI) mass spectrometry or as a primary method for identification and quantification. While the use of these enhanced techniques is encouraged, it is not required.

4. Safety

4.1 Hazards associated with each reagent used in this method have not been precisely defined; however, each chemical compound should be treated as a potential health hazard. From this viewpoint, exposure to these chemicals must be reduced to the lowest possible level by whatever means available. The laboratory is responsible for maintaining a current awareness file of OSHA regulations regarding the safe handling of the chemicals specified in this method. A reference file of safety data sheets (SDSs, OSHA, 29 CFR 1910.1200(g)) should also be made available to all personnel involved in sample handling and chemical analysis. Additional references to laboratory safety are available and have been identified (References 7–9) for the information of the analyst.

4.2 The following analytes covered by this method have been tentatively classified as known or suspected human or mammalian carcinogens: Benzo(a)anthracene, benzidine, 3,3′-dichlorobenzidine, benzo(a)pyrene, *alpha*-BHC, *beta*-BHC, *delta*-BHC, *gamma*-BHC, Dibenz(a,h)-anthracene, N-nitrosodimethylamine, 4,4′-DDT, and PCBs. Other compounds in Table 3 may also be toxic. Primary standards of toxic compounds should be prepared in a chemical fume hood, and a NIOSH/MESA approved toxic gas respirator should be worn when handling high concentrations of these compounds.

4.3 This method allows the use of hydrogen as a carrier gas in place of helium (section 5.6.1.2). The laboratory should take the necessary precautions in dealing with hydrogen, and should limit hydrogen flow at the source to prevent buildup of an explosive mixture of hydrogen in air.

5. Apparatus and Materials

NOTE: Brand names, suppliers, and part numbers are for illustration purposes only. No endorsement is implied. Equivalent performance may be achieved using equipment and materials other than those specified here. Demonstrating that the equipment and supplies used in the laboratory achieves the required performance is the responsibility of the laboratory. Suppliers for equipment and materials in this method may be found through an on-line search. Please do not contact EPA for supplier information.

5.1 Sampling equipment, for discrete or composite sampling.

5.1.1 Grab sample bottle—amber glass bottle large enough to contain the necessary sample volume, fitted with a fluoropolymer-lined screw cap. Foil may be substituted for fluoropolymer if the sample is not corrosive.

If amber bottles are not available, protect samples from light. Unless pre-cleaned, the bottle and cap liner must be washed, rinsed with acetone or methylene chloride, and dried before use to minimize contamination.

5.1.2 Automatic sampler (optional)—the sampler must incorporate a pre-cleaned glass sample container. Samples must be kept refrigerated at ≤6 °C and protected from light during compositing. If the sampler uses a peristaltic pump, a minimum length of compressible silicone rubber tubing may be used. Before use, however, rinse the compressible tubing with methanol, followed by repeated rinsing with reagent water, to minimize the potential for sample contamination. An integrating flow meter is required to collect flow-proportioned composites.

5.2 Glassware.

5.2.1 Separatory funnel—Size appropriate to hold sample volume and extraction solvent volume, and equipped with fluoropolymer stopcock.

5.2.2 Drying column—Chromatographic column, approximately 400 mm long by 19 mm ID, with coarse frit, or equivalent, sufficient to hold 15 g of anhydrous sodium sulfate.

5.2.3 Concentrator tube, Kuderna-Danish—10 mL, graduated (Kontes 570050–1025 or equivalent). Calibration must be checked at the volumes employed in the test. A ground glass stopper is used to prevent evaporation of extracts.

5.2.4 Evaporative flask, Kuderna-Danish—500 mL (Kontes 57001–0500 or equivalent). Attach to concentrator tube with springs.

NOTE: Use of a solvent recovery system with the K–D or other solvent evaporation apparatus is strongly recommended.

5.2.5 Snyder column, Kuderna-Danish—Three-ball macro (Kontes 503000–0121 or equivalent).

5.2.6 Snyder column, Kuderna-Danish—Two-ball micro (Kontes 569001–0219 or equivalent).

5.2.7 Vials—10–15 mL, amber glass, with Teflon-lined screw cap.

5.2.8 Continuous liquid-liquid extractor—Equipped with fluoropolymer or glass connecting joints and stopcocks requiring no lubrication. (Hershberg-Wolf Extractor, Ace Glass Company, Vineland, NJ, P/N 6848–20, or equivalent.)

5.2.9 In addition to the glassware listed above, the laboratory should be equipped with all necessary pipets, volumetric flasks, beakers, and other glassware listed in this method and necessary to perform analyses successfully.

5.3 Boiling chips—Approximately 10/40 mesh, glass, silicon carbide, or equivalent. Heat to 400 °C for 30 minutes, or solvent rinse or Soxhlet extract with methylene chloride.

5.4 Water bath—Heated, with concentric ring cover, capable of temperature control (±2 °C). The bath should be used in a hood.

5.5 Balances.

5.5.1 Analytical, capable of accurately weighing 0.1 mg.

5.5.2 Top loading, capable of accurately weighing 10 mg.

5.6 GC/MS system.

5.6.1 Gas chromatograph (GC)—An analytical system complete with a temperature programmable gas chromatograph and all required accessories, including syringes and analytical columns.

5.6.1.1 Injection port—Can be split, splitless, temperature programmable vaporization split/splitless (PTV), solvent-purge, large-volume, on-column, backflushed, or other. An autosampler is highly recommended because it injects volumes more precisely than volumes injected manually.

5.6.1.2 Carrier gas—Helium or hydrogen. Data in the tables in this method were obtained using helium carrier gas. If hydrogen is used, analytical conditions may need to be adjusted for optimum performance, and calibration and all QC tests must be performed with hydrogen carrier gas. See Section 4.3 for precautions regarding the use of hydrogen as a carrier gas.

5.6.2 GC column—See the footnotes to Tables 4 and 5. Other columns or column systems may be used provided all requirements in this method are met.

5.6.3 Mass spectrometer—Capable of repetitively scanning from 35–450 Daltons (amu) every two seconds or less, utilizing a 70 eV (nominal) electron energy in the electron impact ionization mode, and producing a mass spectrum which meets all the criteria in Table 9A or 9B when 50 ng or less of decafluorotriphenyl phosphine (DFTPP; CAS 5074–71–5; bis(pentafluorophenyl) phenyl phosphine) is injected into the GC.

5.6.4 GC/MS interface—Any GC to MS interface that meets all performance requirements in this method may be used.

5.6.5 Data system—A computer system must be interfaced to the mass spectrometer that allows the continuous acquisition and storage of mass spectra acquired throughout the chromatographic program. The computer must have software that allows searching any GC/MS data file for specific m/z's (masses) and plotting m/z abundances versus time or scan number. This type of plot is defined as an extracted ion current profile (EICP). Software must also be available that allows integrating the abundance at any EICP between specified time or scan number limits.

5.7 Automated gel permeation chromatograph (GPC).

5.7.1 GPC column—150–700 mm long × 21–25 mm ID, packed with 70 g of SX–3 Biobeads; Bio-Rad Labs, or equivalent.

5.7.2 Pump, injection valve, UV detector, and other apparatus necessary to meet the requirements in this method.

5.8 Nitrogen evaporation device—Equipped with a water bath than can be maintained at 30–45 °C; N-Evap, Organomation Associates, or equivalent.

5.9 Muffle furnace or kiln—Capable of baking glassware or sodium sulfate in the range of 400–450 °C.

6. Reagents

6.1 Reagent water—Reagent water is defined as water in which the analytes of interest and interfering compounds are not detected at the MDLs of the analytes of interest.

6.2 Sodium hydroxide solution (10 N)—Dissolve 40 g of NaOH (ACS) in reagent water and dilute to 100 mL.

6.3 Sodium thiosulfate—(ACS) granular.

6.4 Sulfuric acid (1+1)—Slowly add 50 mL of H_2SO_4 (ACS, sp. gr. 1.84) to 50 mL of reagent water.

6.5 Acetone, methanol, methylene chloride, 2-propanol—High purity pesticide quality, or equivalent, demonstrated to be free of the analytes of interest and interferences (Section 3). Purification of solvents by distillation in all-glass systems may be required.

6.6 Sodium sulfate—(ACS) granular, anhydrous, rinsed or Soxhlet extracted with methylene chloride (20 mL/g), baked in a shallow tray at 450 °C for one hour minimum, cooled in a desiccator, and stored in a precleaned glass bottle with screw cap that prevents moisture from entering.

6.7 Stock standard solutions (1.00 µg/µL)—Stock standard solutions may be prepared from pure materials, or purchased as certified solutions. Traceability must be to the National Institute of Standards and Technology (NIST) or other national or international standard, when available. Stock solution concentrations alternate to those below may be used. Because of the toxicity of some of the compounds, primary dilutions should be prepared in a hood, and a NIOSH/MESA approved toxic gas respirator should be worn when high concentrations of neat materials are handled. The following procedure may be used to prepare standards from neat materials.

6.7.1 Prepare stock standard solutions by accurately weighing about 0.0100 g of pure material. Dissolve the material in pesticide quality methanol or other suitable solvent and dilute to volume in a 10-mL volumetric flask. Larger volumes may be used at the convenience of the laboratory. When compound purity is assayed to be 96% or greater, the weight may be used without correction to calculate the concentration of the stock standard. Commercially prepared stock standards may be used at any concentration if they are certified by the manufacturer or by an independent source.

6.7.2 Unless stated otherwise in this method, store non-aqueous standards in fluoropolymer-lined screw-cap, or heat-sealed, glass containers, in the dark at −20 to −10 °C. Store aqueous standards; e.g., the aqueous LCS (section 8.4.1), in the dark at ≤ 6 °C, but do not freeze. Standards prepared by the laboratory may be stored for up to one year, except when comparison with QC check standards indicates that a standard has degraded or become more concentrated due to evaporation, or unless the laboratory has data on file to prove stability for a longer period. Commercially prepared standards may be stored until the expiration date provided by the vendor, except when comparison with QC check standards indicates that a standard has degraded or become more concentrated due to evaporation, or unless the laboratory has data from the vendor on file to prove stability for a longer period.

6.8 Surrogate standard spiking solution.

6.8.1 Select a minimum of three surrogate compounds from Table 8 that most closely match the recovery of the analytes of interest. For example, if all analytes tested are considered acids, use surrogates that have similar chemical attributes. Other compounds may be used as surrogates so long as they do not interfere in the analysis. If only one or two analytes are determined, one or two surrogates may be used.

6.8.2 Prepare a solution containing each selected surrogate such that the concentration in the sample would match the concentration in the mid-point calibration standard. For example, if the midpoint of the calibration is 100 µg/L, prepare the spiking solution at a concentration of 100 µg/mL in methanol. Addition of 1.00 mL of this solution to 1000 mL of sample will produce a concentration of 100 µg/L of the surrogate. Alternate volumes and concentrations appropriate to the response of the GC/MS instrument or for selective ion monitoring (SIM) may be used, if desired. Store per section 6.7.2.

6.9 Internal standard spiking solution.

6.9.1 Select three or more internal standards similar in chromatographic behavior to the analytes of interest. Internal standards are listed in Table 8. Suggested internal standards are: 1,4-dichlorobenzene-d_4; naphthalene-d_8; acenaphthene-d_{10}; phenanthrene-d_{10}; chrysene-d_{12}; and perylene-d_{12}. The laboratory must demonstrate that measurement of the internal standards is not affected by method or matrix interferences (see also section 7.3.4).

6.9.2 Prepare the internal standards at a concentration of 10 mg/mL in methylene chloride or other suitable solvent. When 10 µL of this solution is spiked into a 1-mL extract, the concentration of the internal standards will be 100 µg/mL. A lower concentration appropriate to the response of the GC/MS instrument or for SIM may be used, if desired. Store per section 6.7.3.

6.9.3 To assure accurate analyte identification, particularly when SIM is used, it may be advantageous to include more internal standards than those suggested in section 6.9.1. An analyte will be located most accurately if its retention time relative to an internal standard is in the range of 0.8 to 1.2.

6.10 DFTPP standard—Prepare a solution of DFTPP in methanol or other suitable solvent such that 50 ng or less will be injected (see section 13.2). An alternative concentration may be used to compensate for specific injection volumes or to assure that the operating range of the instrument is not exceeded, so long as the total injected is 50 ng or less. Include benzidine and pentachlorophenol in this solution such that ≤100 ng of benzidine and ≤50 ng of pentachlorophenol will be injected.

6.11 Quality control check sample concentrate—See section 8.2.1.

6.12 GPC calibration solution.

6.12.1 Prepare a methylene chloride solution to contain corn oil, bis(2-ethylhexyl) phthalate (BEHP), perylene, and sulfur at the concentrations in section 6.12.2, or at concentrations appropriate to the response of the detector.

NOTE: Sulfur does not readily dissolve in methylene chloride, but is soluble in warm corn oil. The following procedure is suggested for preparation of the solution.

6.12.2 Weigh 8 mg sulfur and 2.5 g corn oil into a 100-mL volumetric flask and warm to dissolve the sulfur. Separately weigh 100 mg BEHP, 20 mg pentachlorophenol, and 2 mg perylene and add to flask. Bring to volume with methylene chloride and mix thoroughly.

6.12.3 Store the solution in an amber glass bottle with a fluoropolymer-lined screw cap at 0–6 °C. Protect from light. Refrigeration may cause the corn oil to precipitate. Before use, allow the solution to stand at room temperature until the corn oil dissolves, or warm slightly to aid in dissolution. Replace the solution every year, or more frequently if the response of a component changes.

6.13 Sulfur removal—Copper foil or powder (bright, non-oxidized), or tetrabutylammonium sulfite (TBA sulfite).

6.13.1 Copper foil, or powder—Fisher, Alfa Aesar 42455–18, 625 mesh, or equivalent. Cut copper foil into approximately 1-cm squares. Copper must be activated before it may be used, as described below:

6.13.1.1 Place the quantity of copper needed for sulfur removal (section 11.2.1.3) in a ground-glass-stoppered Erlenmeyer flask or bottle. Cover the foil or powder with methanol.

6.13.1.2 Add HCl dropwise (0.5–1.0 mL) while swirling, until the copper brightens.

6.13.1.3 Pour off the methanol/HCl and rinse 3 times with reagent water to remove all traces of acid, then 3 times with acetone, then 3 times with hexane.

6.13.1.4 For copper foil, cover with hexane after the final rinse. Store in a stoppered flask under nitrogen until used. For the powder, dry on a rotary evaporator or under a stream of nitrogen. Store in a stoppered flask under nitrogen until used. Inspect the copper foil or powder before each use. It must have a bright, non-oxidized appearance to be effective. Copper foil or powder that has oxidized may be reactivated using the procedure described above.

6.13.2 Tetrabutylammonium sodium sulfite (TBA sodium sulfite).

6.13.2.1 Tetrabutylammonium hydrogen sulfate, $[CH_3(CH_2)_3]_4NHSO_4$.

6.13.2.2 Sodium sulfite, Na_2SO_3.

6.13.2.3 Dissolve approximately 3 g tetrabutylammonium hydrogen sulfate in 100 mL of reagent water in an amber bottle with fluoropolymer-lined screw cap. Extract with three 20-mL portions of hexane and discard the hexane extracts.

6.13.2.4 Add 25 g sodium sulfite to produce a saturated solution. Store at room temperature. Replace after 1 month.

6.14 DDT and endrin decomposition (breakdown) solution—Prepare a solution containing endrin at a concentration of 1 µg/mL and 4,4′-DDT at a concentration of 2 µg/mL, in isooctane or hexane. A 1-µL injection of this standard will contain 1 nanogram (ng) of endrin and 2 ng of DDT. The concentration of the solution may be adjusted by the laboratory to accommodate other injection volumes such that the same masses of the two analytes are introduced into the instrument.

7. Calibration

7.1 Establish operating conditions equivalent to those in the footnote to Table 4 or 5 for the base/neutral or acid fraction, respectively. If a combined base/neutral/acid fraction will be analyzed, use the conditions in the footnote to Table 4. Alternative temperature program and flow rate conditions may be used. It is necessary to calibrate the GC/MS for the analytes of interest (Section 1.3) only.

7.2 Internal standard calibration.

7.2.1 Prepare calibration standards for the analytes of interest and surrogates at a minimum of five concentration levels by adding appropriate volumes of one or more stock standards to volumetric flasks. One of the calibration standards should be at a concentration at or below the ML specified in Table 1, 2, or 3, or as specified by a regulatory/control authority or in a permit. The ML value may be rounded to a whole number that is more convenient for preparing the standard, but must not exceed the ML in Table 1, 2, or 3 for those analytes which list ML values. Alternatively, the laboratory may establish a laboratory ML for each analyte based on the concentration in a

nominal whole-volume sample that is equivalent to the concentration of the lowest calibration standard in a series of standards produced in the laboratory or obtained from a commercial vendor. The laboratory's ML must not exceed the ML in Table 1, 2, or 3, and the resulting calibration must meet the acceptance criteria in Section 7.2.3, based on the RSD, RSE, or R^2. The concentrations of the other calibration standards should correspond to the expected range of concentrations found in real samples or should define the working range of the GC/MS system for full-scan and/or SIM operation, as appropriate. A minimum of six concentration levels is required for a second order, non-linear (e.g., quadratic; $ax^2 + bx + c = 0$) calibration (section 7.2.3). Calibrations higher than second order are not allowed. To each calibration standard or standard mixture, add a known constant volume of the internal standard solution (section 6.9), and dilute to volume with methylene chloride.

NOTE: The large number of analytes in Tables 1 through 3 may not be soluble or stable in a single solution; multiple solutions may be required if a large number of analytes are to be determined simultaneously.

7.2.1.1 Prior to analysis of the calibration standards, inject the DFTPP standard (Section 6.10) and adjust the scan rate of the mass spectrometer to produce a minimum of 5 mass spectra across the DFTPP GC peak. Adjust instrument conditions until the DFTPP criteria in Table 9A or 9B are met. Calculate peak tailing factors for benzidine and pentachlorophenol. Calculation of the tailing factor is illustrated in Figure 1. The tailing factor for benzidine and pentachlorophenol must be <2; otherwise, adjust instrument conditions and either replace the column or break off a short section of the front end of the column, and repeat the test. Once the scan conditions are established, they must be used for analyses of all standards, blanks, and samples.

NOTE: The DFTPP spectrum may be evaluated by summing the intensities of the m/z's across the GC peak, subtracting the background at each m/z in a region of the chromatogram within 20 scans of but not including any part of, the DFTPP peak. The DFTPP spectrum may also be evaluated by fitting a Gaussian to each m/z and using the intensity at the maximum for each Gaussian or by integrating the area at each m/z and using the integrated areas. Other means may be used for evaluation of the DFTPP spectrum so long as the spectrum is not distorted to meet the criteria in Table 9A or 9B.

7.2.1.2 Analyze the mid-point combined base/neutral and acid calibration standard and enter or review the retention time, relative retention time, mass spectrum, and quantitation m/z in the data system for each analyte of interest, surrogate, and internal standard. If additional analytes (Table 3) are to be quantified, include these analytes in the standard. The mass spectrum for each analyte must be comprised of a minimum of 2 m/z's (Tables 4 and 5); 3 to 5 m/z's assure more reliable analyte identification. Suggested quantitation m/z's are shown in Tables 4 and 5 as the primary m/z. If an interference occurs at the primary m/z, use one of the secondary m/z's or an alternate m/z. A single m/z only is required for quantitation.

7.2.1.3 For SIM operation, determine the analytes in each descriptor, the quantitation m/z for each analyte (the quantitation m/z can be the same as for full-scan operation; section 7.2.1.2), the dwell time on each m/z for each analyte, and the beginning and ending retention time for each descriptor. Analyze the verification standard in scan mode to verify m/z's and establish retention times for the analytes. There must be a minimum of two m/z's for each analyte to assure analyte identification. To maintain sensitivity, the number of m/z's in a descriptor should be limited. For example, for a descriptor with 10 m/z's and a chromatographic peak width of 5 sec, a dwell time of 100 ms at each m/z would result in a scan time of 1 second and provide 5 scans across the GC peak. The quantitation m/z will usually be the most intense peak in the mass spectrum. The quantitation m/z and dwell time may be optimized for each analyte. The acquisition table used for SIM must take into account the mass defect (usually less than 0.2 Dalton) that can occur at each m/z monitored. Refer to the footnotes to Table 4 or 5 for establishing operating conditions and to section 7.2.1.1 for establishing scan conditions.

7.2.1.4 For combined scan and SIM operation, set up the scan segments and descriptors to meet requirements in sections 7.2.1.1–7.2.1.3. Analyze unfamiliar samples in the scan mode to assure that the analytes of interest are determined.

7.2.2 Analyze each calibration standard according to section 12 and tabulate the area at the quantitation m/z against concentration for each analyte of interest, surrogate, and internal standard. If an interference is encountered, use a secondary m/z (Table 4 or 5) for quantitation. Calculate a response factor (RF) for each analyte of interest at each concentration using Equation 1.

$$RF = \frac{(A_s x C_{is})}{(A_{is} x C_s)}$$

Equation 1

where:

A_s = Area of the characteristic m/z for the analyte of interest or surrogate.

A_{is} = Area of the characteristic m/z for the internal standard.

C_{is} = Concentration of the internal standard (µg/mL).

C_s = Concentration of the analyte of interest or surrogate (µg/mL).

7.2. Calculate the mean (average) and relative standard deviation (RSD) of the responses factors. If the RSD is less than 35%, the RF can be assumed to be invariant and the average RF can be used for calculations. Alternatively, the results can be used to fit a linear or quadratic regression of response ratios, As/Ais, vs. concentration ratios Cs/Cis. If used, the regression must be weighted inversely proportional to concentration. The coefficient of determination (R^2; Reference 10) of the weighted regression must be greater than 0.920 (this value roughly corresponds to the RSD limit of 35%). Alternatively, the relative standard error (Reference 11) may be used as an acceptance criterion. As with the RSD, the RSE must be less than 35%. If an RSE less than 35% cannot be achieved for a quadratic regression, system performance is unacceptable and the system must be adjusted and re-calibrated.

NOTE: Using capillary columns and current instrumentation, it is quite likely that a laboratory can calibrate the target analytes in this method and achieve a linearity metric (either RSD or RSE) well below 35%. Therefore, laboratories are permitted to use more stringent acceptance criteria for calibration than described here, for example, to harmonize their application of this method with those from other sources.

7.3 Calibration verification—The RF or calibration curve must be verified immediately after calibration and at the beginning of each 12-hour shift, by analysis of a standard at or near the concentration of the mid-point calibration standard (section 7.2.1). The standard(s) must be obtained from a second manufacturer or a manufacturer's batch prepared independently from the batch used for calibration. Traceability must be to a national standard, when available. Include the surrogates (section 6.8) in this solution. It is necessary to verify calibration for the analytes of interest (section 1.3) only.

NOTE: The 12-hour shift begins after the DFTPP (section 13.1) and DDT/endrin tests (if DDT and endrin are to be determined), and after analysis of the calibration verification standard. The 12-hour shift ends 12 hours later. The DFTPP, DDT/endrin, and calibration verification tests are outside of the 12-hour shift.

7.3.1 Analyze the calibration verification standard(s) beginning in section 12. Calculate the percent recovery of each analyte. Compare the recoveries for the analytes of interest against the acceptance criteria for recovery (Q) in Table 6, and the recoveries for the surrogates against the acceptance criteria in Table 8. If recovery of the analytes of interest and surrogates meet acceptance criteria, system performance is acceptable and analysis of samples may continue. If any individual recovery is outside its limit, system performance is unacceptable for that analyte.

NOTE: The large number of analytes in Tables 6 and 8 present a substantial probability that one or more will fail acceptance criteria when all analytes are tested simultaneously.

7.3.2 When one or more analytes fail acceptance criteria, analyze a second aliquot of the calibration verification standard and compare ONLY those analytes that failed the first test (section 7.3.1) with their respective acceptance criteria. If these analytes now pass, system performance is acceptable and analysis of samples may continue. A repeat failure of any analyte that failed the first test, however, will confirm a general problem with the measurement system. If this occurs, repair the system (section 7.2.1.1) and repeat the test (section 7.3.1), or prepare a fresh calibration standard and repeat the test. If calibration cannot be verified after maintenance or injection of the fresh calibration standard, re-calibrate the instrument.

NOTE: If it is necessary to perform a repeat verification test frequently; *i.e.*, perform two tests in order to pass, it may be prudent to perform two injections in succession and review the results, rather than perform one injection, review the results, then perform the second injection if results from the first injection fail. To maintain the validity of the test and re-test, system maintenance and/or adjustment is not permitted between the injections.

7.3.3 Many of the analytes in Table 3 do not have QC acceptance criteria in Table 6, and some of the surrogates in Table 8 do not have acceptance criteria. If calibration is to be verified and other QC tests are to be performed for these analytes, acceptance criteria must be developed and applied. EPA has provided guidance for development of QC acceptance criteria (References 12 and 13). Alternatively, analytes that do not have acceptance criteria in Table 6 or Table 8 may

be based on laboratory control charts, or 60 to 140% may be used.

7.3.4 Internal standard responses—Verify that detector sensitivity has not changed by comparing the response of each internal standard in the calibration verification standard (section 7.3) to the response of the respective internal standard in the midpoint calibration standard (section 7.2.1). The peak areas or heights of the internal standards in the calibration verification standard must be within 50% to 200% (1/2 to 2x) of their respective peak areas or heights in the mid-point calibration standard. If not, repeat the calibration verification test using a fresh calibration verification standard (7.3), or perform and document system repair. Subsequent to repair, repeat the calibration verification test (section 7.3.1). If the responses are still not within 50% to 200%, recalibrate the instrument (section 7.2.2) and repeat the calibration verification test.

8. Quality Control

8.1 Each laboratory that uses this method is required to operate a formal quality assurance program. The minimum requirements of this program consist of an initial demonstration of laboratory capability and ongoing analysis of spiked samples and blanks to evaluate and document data quality (40 CFR 136.7). The laboratory must maintain records to document the quality of data generated. Results of ongoing performance tests are compared with established QC acceptance criteria to determine if the results of analyses meet performance requirements of this method. When results of spiked samples do not meet the QC acceptance criteria in this method, a quality control check sample (laboratory control sample; LCS) must be analyzed to confirm that the measurements were performed in an in-control mode of operation. A laboratory may develop its own performance criteria (as QC acceptance criteria), provided such criteria are as or more restrictive than the criteria in this method.

8.1.1 The laboratory must make an initial demonstration of capability (DOC) to generate acceptable precision and recovery with this method. This demonstration is detailed in Section 8.2.

8.1.2 In recognition of advances that are occurring in analytical technology, and to overcome matrix interferences, the laboratory is permitted certain options (section 1.6 and 40 CFR 136.6(b)) to improve separations or lower the costs of measurements. These options may include alternate extraction, concentration, and cleanup procedures (e.g., solid-phase extraction; rotary-evaporator concentration; column chromatography cleanup), changes in column and type of mass spectrometer (40 CFR 136.6(b)(4)(xvi)). Alternate determinative techniques, such as substitution of spectroscopic or immunoassay techniques, and changes that degrade method performance, are not allowed. If an analytical technique other than GC/MS is used, that technique must have a specificity equal to or greater than the specificity of GC/MS for the analytes of interest. The laboratory is also encouraged to participate in inter-comparison and performance evaluation studies (see section 8.10).

8.1.2.1 Each time a modification is made to this method, the laboratory is required to repeat the procedure in section 8.2. If the detection limit of the method will be affected by the change, the laboratory must demonstrate that the MDLs (40 CFR part 136, appendix B) are lower than one-third the regulatory compliance limit or the MDLs in this method, whichever are greater. If calibration will be affected by the change, the instrument must be recalibrated per section 7. Once the modification is demonstrated to produce results equivalent or superior to results produced by this method, that modification may be used routinely thereafter, so long as the other requirements in this method are met (e.g., matrix spike/matrix spike duplicate recovery and relative percent difference).

8.1.2.1.1 If SPE, or another allowed method modification, is to be applied to a specific discharge, the laboratory must prepare and analyze matrix spike/matrix spike duplicate (MS/MSD) samples (section 8.3) and LCS samples (section 8.4). The laboratory must include surrogates (section 8.7) in each of the samples. The MS/MSD and LCS samples must be fortified with the analytes of interest (Section 1.3). If the modification is for nationwide use, MS/MSD samples must be prepared from a minimum of nine different discharges (See section 8.1.2.1.2), and all QC acceptance criteria in this method must be met. This evaluation only needs to be performed once other than for the routine QC required by this method (for example it could be performed by the vendor of the SPE materials) but any laboratory using that specific material must have the results of the study available. This includes a full data package with the raw data that will allow an independent reviewer to verify each determination and calculation performed by the laboratory (see section 8.1.2.2.5, items (a)–(q)).

8.1.2.1.2 Sample matrices on which MS/MSD tests must be performed for nationwide use of an allowed modification:

(a) Effluent from a POTW.

(b) ASTM D5905 Standard Specification for Substitute Wastewater.

(c) Sewage sludge, if sewage sludge will be in the permit.

(d) ASTM D1141 Standard Specification for Substitute Ocean Water, if ocean water will be in the permit.

(e) Untreated and treated wastewaters up to a total of nine matrix types (see *https://www.epa.gov/eg/industrial-effluent-guidelines*

for a list of industrial categories with existing effluent guidelines).

(i) At least one of the above wastewater matrix types must have at least one of the following characteristics:

(A) Total suspended solids greater than 40 mg/L.

(B) Total dissolved solids greater than 100 mg/L.

(C) Oil and grease greater than 20 mg/L.

(D) NaCl greater than 120 mg/L.

(E) $CaCO_3$ greater than 140 mg/L.

(ii) Results of MS/MSD tests must meet QC acceptance criteria in Section 8.3.

(f) A proficiency testing (PT) sample from a recognized provider, in addition to tests of the nine matrices (section 8.1.2.1.1).

8.1.2.2 The laboratory is required to maintain records of modifications made to this method. These records include the following, at a minimum:

8.1.2.2.1 The names, titles, and business street addresses, telephone numbers, and email addresses, of the analyst(s) that performed the analyses and modification, and of the quality control officer that witnessed and will verify the analyses and modifications.

8.1.2.2.2 A list of analytes, by name and CAS Registry Number.

8.1.2.2.3 A narrative stating reason(s) for the modifications.

8.1.2.2.4 Results from all quality control (QC) tests comparing the modified method to this method, including:

(a) Calibration (section 7).

(b) Calibration verification (section 7).

(c) Initial demonstration of capability (section 8.2).

(d) Analysis of blanks (section 8.5).

(e) Matrix spike/matrix spike duplicate analysis (section 8.3).

(f) Laboratory control sample analysis (section 8.4).

8.1.2.2.5 Data that will allow an independent reviewer to validate each determination by tracing the instrument output (peak height, area, or other signal) to the final result. These data are to include:

(a) Sample numbers and other identifiers.

(b) Extraction dates.

(c) Analysis dates and times.

(d) Analysis sequence/run chronology.

(e) Sample weight or volume (ssection 10).

(f) Extract volume prior to each cleanup step (sections 10 and 11).

(g) Extract volume after each cleanup step (section 11).

(h) Final extract volume prior to injection (sections 10 and 12).

(i) Injection volume (section 12.2.3).

(j) Sample or extract dilution (section 12.2.3.2).

(k) Instrument and operating conditions.

(l) Column (dimensions, material, etc).

(m) Operating conditions (temperature program, flow rate, etc).

(n) Detector (type, operating conditions, etc).

(o) Chromatograms, mass spectra, and other recordings of raw data.

(p) Quantitation reports, data system outputs, and other data to link the raw data to the results reported.

(q) A written Standard Operating Procedure (SOP).

8.1.2.2.6 Each individual laboratory wishing to use a given modification must perform the start-up tests in section 8.1.2 (e.g., DOC, MDL), with the modification as an integral part of this method prior to applying the modification to specific discharges. Results of the DOC must meet the QC acceptance criteria in Table 6 for the analytes of interest (section 1.3), and the MDLs must be equal to or lower than the MDLs in Tables 1, 2, or 3 for the analytes of interest.

8.1.3 Before analyzing samples, the laboratory must analyze a blank to demonstrate that interferences from the analytical system, labware, and reagents, are under control. Each time a batch of samples is extracted or reagents are changed, a blank must be extracted and analyzed as a safeguard against laboratory contamination. Requirements for the blank are given in section 8.5.

8.1.4 The laboratory must, on an ongoing basis, spike and analyze to monitor and evaluate method and laboratory performance on the sample matrix. The procedure for spiking and analysis is given in section 8.3.

8.1.5 The laboratory must, on an ongoing basis, demonstrate through analysis of a quality control check sample (laboratory control sample, LCS; on-going precision and recovery sample, OPR) that the measurement system is in control. This procedure is given in section 8.4.

8.1.6 The laboratory must maintain performance records to document the quality of data that is generated. This procedure is given in section 8.9.

8.1.7 The large number of analytes tested in performance tests in this method present a substantial probability that one or more will fail acceptance criteria when many analytes are tested simultaneously, and a retest is allowed if this situation should occur. If, however, continued re-testing results in further repeated failures, the laboratory must document and report the failures (e.g., as qualifiers on results), unless the failures are not required to be reported as determined by the regulatory/control authority. Results associated with a QC failure for an analyte regulated in a discharge cannot be used to demonstrate regulatory compliance. QC failures do not relieve a discharger or permittee of reporting timely results.

8.2 Initial demonstration of capability (DOC)—To establish the ability to generate acceptable recovery and precision, the laboratory must perform the DOC in sections

8.2.1 through 8.2.6 for the analytes of interest. The laboratory must also establish MDLs for the analytes of interest using the MDL procedure at 40 CFR part 136, appendix B. The laboratory's MDLs must be equal to or lower than those listed in Tables 1, 2, or 3 or lower than one third the regulatory compliance limit, whichever is greater. For MDLs not listed in Tables 4 and 5, the laboratory must determine the MDLs using the MDL procedure at 40 CFR part 136, appendix B under the same conditions used to determine the MDLs for the analytes listed in Tables 1, 2, and 3. All procedures used in the analysis, including cleanup procedures, must be included in the DOC.

8.2.1 For the DOC, a QC check sample concentrate (LCS concentrate) containing each analyte of interest (section 1.3) is prepared in a water-miscible solvent. The QC check sample concentrate must be prepared independently from those used for calibration, but may be from the same source as the second-source standard used for calibration verification (Section 7.3). The concentrate should produce concentrations of the analytes of interest in water at the midpoint of the calibration range, and may be at the same concentration as the LCS (section 8.4). Multiple solutions may be required.

NOTE: QC check sample concentrates are no longer available from EPA.

8.2.2 Using a pipet or micro-syringe, prepare four LCSs by adding an appropriate volume of the concentrate to each of four aliquots of reagent water, and mix well. The volume of reagent water must be the same as the volume that will be used for the sample, blank (section 8.5), and MS/MSD (section 8.3). A volume of 1–L and a concentration of 100 µg/L were used to develop the QC acceptance criteria in Table 6. Also add an aliquot of the surrogate spiking solution (section 6.8) to the reagent-water aliquots.

8.2.3 Extract and analyze the four LCSs according to the method beginning in Section 10.

8.2.4 Calculate the average percent recovery ($\bar{X}$) and the standard deviation of the percent recovery (s) for each analyte using the four results.

8.2.5 For each analyte, compare s and ($\bar{X}$) with the corresponding acceptance criteria for precision and recovery in Table 6. For analytes in Table 3 not listed in Table 6, DOC QC acceptance criteria must be developed by the laboratory. EPA has provided guidance for development of QC acceptance criteria (References 12 and 13). Alternatively, acceptance criteria for analytes not listed in Table 6 may be based on laboratory control charts. If s and ($\bar{X}$) for all analytes of interest meet the acceptance criteria, system performance is acceptable and analysis of blanks and samples may begin. If any individual s exceeds the precision limit or any individual ($\bar{X}$) falls outside the range for recovery, system performance is unacceptable for that analyte.

NOTE: The large number of analytes in Tables 1–3 present a substantial probability that one or more will fail at least one of the acceptance criteria when many or all analytes are determined simultaneously. Therefore, the analyst is permitted to conduct a ''re-test'' as described in section 8.2.6.

8.2.6 When one or more of the analytes tested fail at least one of the acceptance criteria, repeat the test for only the analytes that failed. If results for these analytes pass, system performance is acceptable and analysis of samples and blanks may proceed. If one or more of the analytes again fail, system performance is unacceptable for the analytes that failed the acceptance criteria. Correct the problem and repeat the test (section 8.2). See section 8.1.7 for disposition of repeated failures.

NOTE: To maintain the validity of the test and re-test, system maintenance and/or adjustment is not permitted between this pair of tests.

8.3 Matrix spike and matrix spike duplicate (MS/MSD)—The purpose of the MS/MSD requirement is to provide data that demonstrate the effectiveness of the method as applied to the samples in question by a given laboratory, and both the data user (discharger, permittee, regulated entity, regulatory/control authority, customer, other) and the laboratory share responsibility for provision of such data. The data user should identify the sample and the analytes of interest (section 1.3) to be spiked and provide sufficient sample volume to perform MS/MSD analyses. The laboratory must, on an ongoing basis, spike at least 5% of the samples in duplicate from each discharge being monitored to assess accuracy (recovery and precision). If direction cannot be obtained from the data user, the laboratory must spike at least one sample in duplicate per extraction batch of up to 20 samples with the analytes in Table 1. Spiked sample results should be reported only to the data user whose sample was spiked, or as requested or required by a regulatory/control authority, or in a permit.

8.3.1 If, as in compliance monitoring, the concentration of a specific analyte will be checked against a regulatory concentration limit, the concentration of the spike should be at that limit; otherwise, the concentration of the spike should be one to five times higher than the background concentration determined in section 8.3.2, at or near the midpoint of the calibration range, or at the concentration in the LCS (section 8.4) whichever concentration would be larger.

8.3.2 Analyze one sample aliquot to determine the background concentration (B) of the each analyte of interest. If necessary, prepare a new check sample concentrate (section 8.2.1) appropriate for the background

concentration. Spike and analyze two additional sample aliquots, and determine the concentration after spiking (A_1 and A_2) of each analyte. Calculate the percent recoveries (P_1 and P_2) as 100 (A_1 − B)/T and 100 (A_2 − B)/T, where T is the known true value of the spike. Also calculate the relative percent difference (RPD) between the concentrations (A_1 and A_2) as 200 $|A_1 - A_2|/(A_1 + A_2)$. If necessary, adjust the concentrations used to calculate the RPD to account for differences in the volumes of the spiked aliquots.

8.3.3 Compare the percent recoveries (P_1 and P_2) and the RPD for each analyte in the MS/MSD aliquots with the corresponding QC acceptance criteria in Table 6. A laboratory may develop and apply QC acceptance criteria more restrictive than the criteria in Table 6, if desired.

8.3.3.1 If any individual P falls outside the designated range for recovery in either aliquot, or the RPD limit is exceeded, the result for the analyte in the unspiked sample is suspect. See Section 8.1.7 for disposition of failures.

8.3.3.2 The acceptance criteria in Table 6 were calculated to include an allowance for error in measurement of both the background and spike concentrations, assuming a spike to background ratio of 5:1. This error will be accounted for to the extent that the spike to background ratio approaches 5:1 (Reference 14) and is applied to spike concentrations of 100 µg/L and higher. If spiking is performed at a concentration lower than 100 µg/L, the laboratory must use the QC acceptance criteria in Table 6, the optional QC acceptance criteria calculated for the specific spike concentration in Table 7, or optional in-house criteria (section 8.3.4). To use the acceptance criteria in Table 7: (1) Calculate recovery (X′) using the equation in Table 7, substituting the spike concentration (T) for C; (2) Calculate overall precision (S′) using the equation in Table 7, substituting X′ for $\bar{X}$; (3) Calculate the range for recovery at the spike concentration as (100 X′/T) ± 2.44(100 S′/T)% (Reference 14). For analytes in Table 3 not listed in Table 6, QC acceptance criteria must be developed by the laboratory. EPA has provided guidance for development of QC acceptance criteria (References 12 and 13). Alternatively, acceptance criteria may be based on laboratory control charts.

8.3.4 After analysis of a minimum of 20 MS/MSD samples for each target analyte and surrogate, and if the laboratory chooses to develop and apply the optional in-house QC limits (Section 8.3.3), the laboratory should calculate and apply the optional in-house QC limits for recovery and RPD of future MS/MSD samples (Section 8.3). The QC limits for recovery are calculated as the mean observed recovery ±3 standard deviations, and the upper QC limit for RPD is calculated as the mean RPD plus 3 standard deviations of the RPDs. The in-house QC limits must be updated at least every two years and re-established after any major change in the analytical instrumentation or process. If in-house QC limits are developed, at least 80% of the analytes tested in the MS/MSD must have in-house QC acceptance criteria that are tighter than those in Table 6, and the remaining analytes (those other than the analytes included in the 80%) must meet the acceptance criteria in Table 6. If an in-house QC limit for the RPD is greater than the limit in Table 6, then the limit in Table 6 must be used. Similarly, if an in-house lower limit for recovery is below the lower limit in Table 6, then the lower limit in Table 6 must be used, and if an in-house upper limit for recovery is above the upper limit in Table 6, then the upper limit in Table 6 must be used.

8.4 Laboratory control sample (LCS)—A QC check sample (laboratory control sample, LCS; on-going precision and recovery sample, OPR) containing each analyte of interest (Section 1.3) and surrogate must be prepared and analyzed with each extraction batch of up to 20 samples to demonstrate acceptable recovery of the analytes of interest from a clean sample matrix.

8.4.1 Prepare the LCS by adding QC check sample concentrate (section 8.2.1) to reagent water. Include all analytes of interest (section 1.3) in the LCS. The LCS may be the same sample prepared for the DOC (section 8.2.1). The volume of reagent water must be the same as the volume used for the sample, blank (section 8.5), and MS/MSD (Section 8.3). Also add an aliquot of the surrogate spiking solution (section 6.8). The concentration of the analytes in reagent water should be the same as the concentration in the DOC (section 8.2.2).

8.4.2 Analyze the LCS prior to analysis of field samples in the extraction batch. Determine the concentration (A) of each analyte. Calculate the percent recovery (PS) as 100 (A/T)%, where T is the true value of the concentration in the LCS.

8.4.3 Compare the percent recovery (PS) for each analyte with its corresponding QC acceptance criterion in Table 6. For analytes of interest in Table 3 not listed in Table 6, use the QC acceptance criteria developed for the LCS (section 8.4.5), or limits based on laboratory control charts. If the recoveries for all analytes of interest fall within their respective QC acceptance criteria, analysis of blanks and field samples may proceed. If any individual PS falls outside the range, proceed according to section 8.4.4.

NOTE: The large number of analytes in Tables 1–3 present a substantial probability that one or more will fail the acceptance criteria when all analytes are tested simultaneously. Because a re-test is allowed in event of failure (sections 8.1.7 and 8.4.3), it may be prudent to extract and analyze two LCSs together and evaluate results of the second

analysis against the QC acceptance criteria only if an analyte fails the first test.

8.4.4 Repeat the test only for those analytes that failed to meet the acceptance criteria (PS). If these analytes now pass, system performance is acceptable and analysis of blanks and samples may proceed. Repeated failure, however, will confirm a general problem with the measurement system. If this occurs, repeat the test using a fresh LCS (section 8.2.2) or an LCS prepared with a fresh QC check sample concentrate (section 8.2.1), or perform and document system repair. Subsequent to analysis of the LCS prepared with a fresh sample concentrate, or to system repair, repeat the LCS test (section 8.4). If failure of the LCS indicates a systemic problem with samples in the batch, re-extract and re-analyze the samples in the batch. See section 8.1.7 for disposition of repeated failures.

NOTE: To maintain the validity of the test and re-test, system maintenance and/or adjustment is not permitted between the pair of tests.

8.4.5 After analysis of 20 LCS samples, and if the laboratory chooses to develop and apply in-house QC limits, the laboratory should calculate and apply in-house QC limits for recovery to future LCS samples (section 8.4). Limits for recovery in the LCS should be calculated as the mean recovery ±3 standard deviations. A minimum of 80% of the analytes tested for in the LCS must have QC acceptance criteria tighter than those in Table 6, and the remaining analytes (those other than the analytes included in the 80%) must meet the acceptance criteria in Table 6. If an in-house lower limit for recovery is lower than the lower limit in Table 6, the lower limit in Table 6 must be used, and if an in-house upper limit for recovery is higher than the upper limit in Table 6, the upper limit in Table 6 must be used. Many of the analytes and surrogates do not contain acceptance criteria. The laboratory should use 60–140% as interim acceptance criteria for recoveries of spiked analytes and surrogates that do not have recovery limits specified in Table 8, and at least 80% of the surrogates must meet the 60–140% interim criteria until in-house LCS and surrogate limits are developed. Alternatively, acceptance criteria for analytes that do not have recovery limits in Table 6 may be based on laboratory control charts. In-house QC acceptance criteria must be updated at least every two years.

8.5 Blank—A blank must be extracted and analyzed with each extraction batch to demonstrate that the reagents and equipment used for preparation and analysis are free from contamination.

8.5.1 Spike the surrogates into the blank. Extract and concentrate the blank using the same procedures and reagents used for the samples, LCS, and MS/MSD in the batch. Analyze the blank immediately after analysis of the LCS (section 8.4) and prior to analysis of the MS/MSD and samples to demonstrate freedom from contamination.

8.5.2 If an analyte of interest is found in the blank: At a concentration greater than the MDL for the analyte, at a concentration greater than one-third the regulatory compliance limit, or at a concentration greater than one-tenth the concentration in a sample in the extraction batch, *whichever is greater*, analysis of samples must be halted, and the problem corrected. If the contamination is traceable to the extraction batch, samples affected by the blank must be re-extracted and the extracts re-analyzed. If, however, continued re-testing results in repeated blank contamination, the laboratory must document and report the failures (e.g., as qualifiers on results), unless the failures are not required to be reported as determined by the regulatory/control authority. Results associated with blank contamination for an analyte regulated in a discharge cannot be used to demonstrate regulatory compliance. QC failures do not relieve a discharger or permittee of reporting timely results.

8.6 Internal standards responses.

8.6.1 Calibration verification—The responses (GC peak heights or areas) of the internal standards in the calibration verification must be within 50% to 200% (1/2 to 2x) of their respective responses in the mid-point calibration standard. If they are not, repeat the calibration verification (Section 7.4) test or perform and document system repair. Subsequent to repair, repeat the calibration verification. If the responses are still not within 50% to 200%, re-calibrate the instrument (Section 7) and repeat the calibration verification test.

8.6.2 Samples, blanks, LCSs, and MS/MSDs—The responses (GC peak heights or areas) of each internal standard in each sample, blank, and MS/MSD must be within 50% to 200% (1/2 to 2x) of its respective response in the LCS for the extraction batch. If, as a group, all internal standards are not within this range, perform and document system repair, repeat the calibration verification (section 8.4), and re-analyze the affected samples. If a single internal standard is not within the 50% to 200% range, use an alternate internal standard for quantitation of the analyte referenced to the affected internal standard. It may be necessary to use the data system to calculate a new response factor from calibration data for the alternate internal standard/analyte pair. If an internal standard fails the 50–200% criteria and no analytes are detected in the sample, ignore the failure or report it if required by the regulatory/control authority.

8.7 Surrogate recoveries—The laboratory must evaluate surrogate recovery data in each sample against its in-house surrogate recovery limits. The laboratory may use 60–

140% as interim acceptance criteria for recoveries for surrogates not listed in Table 8. At least 80% of the surrogates must meet the 60–140% interim criteria until in-house limits are developed. Alternatively, surrogate recovery limits may be developed from laboratory control charts, but such limits must be at least as restrictive as those in Table 8. Spike the surrogates into all samples, blanks, LCSs, and MS/MSDs. Compare surrogate recoveries against the QC acceptance criteria in Table 8 and/or those developed in section 7.3.3 or 8.4.5. If any recovery fails its criteria, attempt to find and correct the cause of the failure. See section 8.1.7 for disposition of failures.

8.8 DDT and endrin decomposition (breakdown)—If DDT and/or endrin are to be analyzed using this method, the DDT/endrin decomposition test in section 13.8 must be performed to reliably quantify these two pesticides.

8.9 As part of the QC program for the laboratory, control charts or statements of accuracy for wastewater samples must be assessed and records maintained (40 CFR 136.7(c)(1)(viii)). After analysis of five or more spiked wastewater samples as in section 8.3, calculate the average percent recovery (P_X) and the standard deviation of the percent recovery (sp). Express the accuracy assessment as a percent interval from $P_X - 2sp$ to $P_X + 2sp$. For example, if $P_X = 90\%$ and sp = 10%, the accuracy interval is expressed as 70–110%. Update the accuracy assessment for each analyte on a regular basis (e.g., after each 5–10 new accuracy measurements). If desired, statements of accuracy for laboratory performance, independent of performance on samples, may be developed using LCSs.

8.10 It is recommended that the laboratory adopt additional quality assurance practices for use with this method. The specific practices that are most productive depend upon the needs of the laboratory and the nature of the samples. Field duplicates may be analyzed to assess the precision of environmental measurements. Whenever possible, the laboratory should analyze standard reference materials and participate in relevant performance evaluation studies.

9. Sample Collection, Preservation, and Handling

9.1 Collect samples as grab samples in amber or clear glass bottles, or in refrigerated bottles using automatic sampling equipment. If clear glass is used, protect samples from light. Collect 1–L of ambient waters, effluents, and other aqueous samples. If the sensitivity of the analytical system is sufficient, a smaller volume (e.g., 250 mL), but no less than 100 mL, may be used. Conventional sampling practices (Reference 15) should be followed, except that the bottle must not be pre-rinsed with sample before collection. Automatic sampling equipment must be as free as possible of polyvinyl chloride or other tubing or other potential sources of contamination. If needed, collect additional sample(s) for the MS/MSD (section 8.3).

9.2 Ice or refrigerate samples at ≤6 °C from the time of collection until extraction, but do not freeze. If residual chlorine is present, add 80 mg of sodium thiosulfate per liter of sample and mix well. Any method suitable for field use may be employed to test for residual chlorine (Reference 16). Add more sodium sulfate if 80 mg/L is insufficient but do not add excess sodium thiosulfate. If sodium thiosulfate interferes in the determination of the analytes, an alternate preservative (e.g., ascorbic acid or sodium sulfite) may be used. If preservative has been added, shake the sample vigorously for one minute. Maintain the hermetic seal on the sample bottle until time of analysis.

9.3 All samples must be extracted within 7 days of collection and sample extracts must be analyzed within 40 days of extraction.

10. Extraction

10.1 This section contains procedures for separatory funnel liquid-liquid extraction (SFLLE) and continuous liquid-liquid extraction (CLLE). SFLLE is faster, but may not be as effective as CLLE for recovery of polar analytes such as phenol. SFLLE is labor intensive and may result in formation of emulsions that are difficult to break. CLLE is less labor intensive, avoids emulsion formation, but requires more time (18–24 hours) and more hood space, and may require more solvent. The procedures assume base-neutral extraction followed by acid extraction. For some matrices and analytes of interest, improved results may be obtained by acid-neutral extraction followed by base extraction. A single acid or base extraction may also be performed. If an extraction scheme alternate to base-neutral followed by acid extraction is used, all QC tests must be performed and all QC acceptance criteria must be met with that extraction scheme as an integral part of this method. Solid-phase extraction (SPE) may be used provided requirements in section 8.1.2 are met.

10.2 Separatory funnel liquid-liquid extraction (SFLLE) and extract concentration.

10.2.1 The SFLLE procedure below assumes a sample volume of 1 L. When a different sample volume is extracted, adjust the volume of methylene chloride accordingly.

10.2.2 Mark the water meniscus on the side of the sample bottle for later determination of sample volume. Pour the entire sample into the separatory funnel. Pipet the surrogate standard spiking solution (section 6.8) into the separatory funnel. If the sample will be used for the LCS or MS or MSD, pipet the

appropriate check sample concentrate (section 8.2.1 or 8.3.2) into the separatory funnel. Mix well. Check the pH of the sample with wide-range pH paper and adjust to pH 11–13 with sodium hydroxide solution.

10.2.3 Add 60 mL of methylene chloride to the sample bottle, seal, and shake for approximately 30 seconds to rinse the inner surface. Transfer the solvent to the separatory funnel and extract the sample by shaking the funnel for two minutes with periodic venting to release excess pressure. Allow the organic layer to separate from the water phase for a minimum of 10 minutes. If the emulsion interface between layers is more than one-third the volume of the solvent layer, the analyst must employ mechanical techniques to complete the phase separation. The optimum technique depends upon the sample, but may include stirring, filtration of the emulsion through glass wool or phase-separation paper, salting, centrifugation, or other physical methods. Collect the methylene chloride extract in a flask. If the emulsion cannot be broken (recovery of <80% of the methylene chloride), transfer the sample, solvent, and emulsion into a continuous extractor and proceed as described in section 10.3.

10.2.4 Add a second 60-mL volume of methylene chloride to the sample bottle and repeat the extraction procedure a second time, combining the extracts in the Erlenmeyer flask. Perform a third extraction in the same manner.

10.2.5 Adjust the pH of the aqueous phase to less than 2 using sulfuric acid. Serially extract the acidified aqueous phase three times with 60 mL aliquots of methylene chloride. Collect and combine the extracts in a flask in the same manner as the base/neutral extracts.

NOTE: Base/neutral and acid extracts may be combined for concentration and analysis provided all QC tests are performed and all QC acceptance criteria met for the analytes of interest with the combined extract as an integral part of this method, and provided that the analytes of interest are as reliably identified and quantified as when the extracts are analyzed separately. If doubt exists as to whether identification and quantitation will be affected by use of a combined extract, the fractions must be analyzed separately.

10.2.6 For each fraction or the combined fractions, assemble a Kuderna-Danish (K–D) concentrator by attaching a 10-mL concentrator tube to a 500-mL evaporative flask. Other concentration devices or techniques may be used in place of the K–D concentrator so long as the requirements in section 8.2 are met.

10.2.7 For each fraction or the combined fractions, pour the extract through a solvent-rinsed drying column containing about 10 cm of anhydrous sodium sulfate, and collect the extract in the K–D concentrator. Rinse the Erlenmeyer flask and column with 20–30 mL of methylene chloride to complete the quantitative transfer.

10.2.8 Add one or two clean boiling chips and attach a three-ball Snyder column to the evaporative flask for each fraction (section 10.2.7). Pre-wet the Snyder column by adding about 1 mL of methylene chloride to the top. Place the K–D apparatus on a hot water bath (60–65 °C) so that the concentrator tube is partially immersed in the hot water, and the entire lower rounded surface of the flask is bathed with hot vapor. Adjust the vertical position of the apparatus and the water temperature as required to complete the concentration in 15–20 minutes. At the proper rate of distillation, the balls of the column will actively chatter but the chambers will not flood with condensed solvent. When the apparent volume of liquid reaches 1 mL or other determined amount, remove the K–D apparatus from the water bath and allow to drain and cool for at least 10 minutes. Remove the Snyder column and rinse the flask and its lower joint into the concentrator tube with 1–2 mL of methylene chloride. A 5-mL syringe is recommended for this operation. If the sample will be cleaned up, reserve the K–D apparatus for concentration of the cleaned up extract. Adjust the volume to 5 mL with methylene chloride and proceed to section 11 for cleanup; otherwise, further concentrate the extract for GC/MS analysis per section 10.2.9 or 10.2.10.

10.2.9 Micro Kuderna-Danish concentration—Add another one or two clean boiling chips to the concentrator tube for each fraction and attach a two-ball micro-Snyder column. Pre-wet the Snyder column by adding about 0.5 mL of methylene chloride to the top. Place the K–D apparatus on a hot water bath (60–65 °C) so that the concentrator tube is partially immersed in hot water. Adjust the vertical position of the apparatus and the water temperature as required to complete the concentration in 5–10 minutes. At the proper rate of distillation the balls of the column will actively chatter but the chambers will not flood with condensed solvent. When the apparent volume of liquid reaches about 1 mL or other determined amount, remove the K–D apparatus from the water bath and allow it to drain and cool for at least 10 minutes. Remove the Snyder column and rinse the flask and its lower joint into the concentrator tube with approximately 0.2 mL of or methylene chloride. Adjust the final volume to 1.0 mL or a volume appropriate to the sensitivity desired (e.g., to meet lower MDLs or for selected ion monitoring). Record the volume, stopper the concentrator tube and store refrigerated if further processing will not be performed immediately. If the extracts will be stored longer than two days, they should be transferred to

fluoropolymer-lined screw-cap vials and labeled base/neutral or acid fraction as appropriate. Mark the level of the extract on the vial so that solvent loss can be detected.

10.2.10 Nitrogen evaporation and solvent exchange—Extracts may be concentrated for analysis using nitrogen evaporation in place of micro K–D concentration (section 10.2.9). Extracts that have been cleaned up using sulfur removal (section 11.2) and are ready for analysis are exchanged into methylene chloride.

10.2.10.1 Transfer the vial containing the sample extract to the nitrogen evaporation (blowdown) device (section 5.8). Lower the vial into the water bath and begin concentrating. If the more volatile analytes (section 1.2) are to be concentrated, use room temperature for concentration; otherwise, a slightly elevated (e.g., 30–45 °C) may be used. During the solvent evaporation process, keep the solvent level below the water level of the bath and do not allow the extract to become dry. Adjust the flow of nitrogen so that the surface of the solvent is just visibly disturbed. A large vortex in the solvent may cause analyte loss.

10.2.10.2 Extracts to be solvent exchanged—When the volume of the liquid is approximately 200 µL, add 2 to 3 mL of methylene chloride and continue concentrating to approximately 100 µL. Repeat the addition of solvent and concentrate once more. Adjust the final extract volume to be consistent with the volume extracted and the sensitivity desired.

10.2.10.3 For extracts that have been cleaned up by GPC and that are to be concentrated to a nominal volume of 1 mL, adjust the final volume to compensate the GPC loss. For a 50% GPC loss, concentrate the extract to 1/2000 of the volume extracted. For example, if the volume extracted is 950 mL, adjust the final volume to 0.48 mL. For extracts that have not been cleaned up by GPC and are to be concentrated to a nominal volume of 1.0 mL, adjust the final extract volume to 1/1000 of the volume extracted. For example, if the volume extracted is 950 mL, adjust the final extract volume to 0.95 mL. Alternative means of compensating the loss during GPC are acceptable so long as they produce results as accurate as results produced using the procedure detailed in this Section. An alternative final volume may be used, if desired, and the calculations adjusted accordingly.

NOTE: The difference in the volume fraction for an extract cleaned up by GPC accounts for the loss in GPC cleanup. Also, by preserving the ratio between the volume extracted and the final extract volume, the concentrations and detection limits do not need to be adjusted for differences in the volume extracted and the extract volume.

10.2.11 Transfer the concentrated extract to a vial with fluoropolymer-lined cap. Seal the vial and label with the sample number. Store in the dark at room temperature until ready for GC analysis. If GC analysis will not be performed on the same day, store the vial in the dark at ≤6 °C. Analyze the extract by GC/MS per the procedure in section 12.

10.2.12 Determine the original sample volume by refilling the sample bottle to the mark and transferring the liquid to an appropriately sized graduated cylinder. For sample volumes on the order of 1000 mL, record the sample volume to the nearest 10 mL; for sample volumes on the order of 100 mL, record the volume to the nearest 1 mL. Sample volumes may also be determined by weighing the container before and after filling to the mark with water.

10.3 Continuous liquid/liquid extraction (CLLE).

NOTE: With CLLE, phenol, 2,4-dimethyl phenol, and some other analytes may be preferentially extracted into the base-neutral fraction. Determine an analyte in the fraction in which it is identified and quantified most reliably. Also, the short-chain phthalate esters (e.g., dimethyl phthalate, diethyl phthalate) and some other compounds may hydrolyze during prolonged exposure to basic conditions required for continuous extraction, resulting in low recovery of these analytes. When these analytes are of interest, their recovery may be improved by performing the acid extraction first.

10.3.1 Use CLLE when experience with a sample from a given source indicates an emulsion problem, or when an emulsion is encountered during SFLLE. CLLE may be used for all samples, if desired.

10.3.2 Mark the water meniscus on the side of the sample bottle for later determination of sample volume. Check the pH of the sample with wide-range pH paper and adjust to pH 11–13 with sodium hydroxide solution. Transfer the sample to the continuous extractor. Pipet surrogate standard spiking solution (section 6.8) into the sample. If the sample will be used for the LCS or MS or MSD, pipet the appropriate check sample concentrate (section 8.2.1 or 8.3.2) into the extractor. Mix well. Add 60 mL of methylene chloride to the sample bottle, seal, and shake for 30 seconds to rinse the inner surface. Transfer the solvent to the extractor.

10.3.3 Repeat the sample bottle rinse with an additional 50–100 mL portion of methylene chloride and add the rinse to the extractor.

10.3.4 Add a suitable volume of methylene chloride to the distilling flask (generally 200–500 mL), add sufficient reagent water to ensure proper operation, and extract for 18–24 hours. A shorter or longer extraction time may be used if all QC acceptance criteria are met. Test and, if necessary, adjust the pH of the water during the second or third hour of the extraction. After extraction, allow the apparatus to cool, then detach the distilling flask. Dry, concentrate, and seal the extract

per sections 10.2.6 through 10.2.11. See the note at section 10.2.5 regarding combining extracts of the base/neutral and acid fractions.

10.3.5 Charge the distilling flask with methylene chloride and attach it to the continuous extractor. Carefully, while stirring, adjust the pH of the aqueous phase to less than 2 using sulfuric acid. Extract for 18–24 hours. A shorter or longer extraction time may be used if all QC acceptance criteria are met. Test and, if necessary, adjust the pH of the water during the second or third hour of the extraction. After extraction, allow the apparatus to cool, then detach the distilling flask. Dry, concentrate, and seal the extract per sections 10.2.6 through 10.2.11. Determine the sample volume per section 10.2.12.

11. Extract Cleanup

NOTE: Cleanup may not be necessary for relatively clean samples (e.g., treated effluents, groundwater, drinking water). If particular circumstances require the use of a cleanup procedure, the laboratory may use any or all of the procedures below or any other appropriate procedure. Before using a cleanup procedure, the laboratory must demonstrate that the requirements of section 8.1.2 can be met using the cleanup procedure as an integral part of this method.

11.1 Gel permeation chromatography (GPC).

11.1.1 Calibration.

11.1.1.1 Load the calibration solution (section 6.12) into the sample loop.

11.1.1.2 Inject the calibration solution and record the signal from the detector. The elution pattern will be corn oil, bis(2-ethylhexyl) phthalate, pentachlorophenol, perylene, and sulfur.

11.1.1.3 Set the ''dump time'' to allow >85% removal of the corn oil and >85% collection of the phthalate.

11.1.1.4 Set the ''collect time'' to the peak minimum between perylene and sulfur.

11.1.1.5 Verify calibration with the calibration solution after every 20 or fewer extracts. Calibration is verified if the recovery of the pentachlorophenol is greater than 85%. If calibration is not verified, recalibrate using the calibration solution, and re-extract and clean up the preceding extracts using the calibrated GPC system.

11.1.2 Extract cleanup—GPC requires that the column not be overloaded. The column specified in this method is designed to handle a maximum of 0.5 g of high molecular weight material in a 5-mL extract. If the extract is known or expected to contain more than 0.5 g, the extract is split into fractions for GPC and the fractions are combined after elution from the column. The solids content of the extract may be obtained gravimetrically by evaporating the solvent from a 50-µL aliquot.

11.1.2.1 Filter the extract or load through the filter holder to remove particulates. Load the extract into the sample loop. The maximum capacity of the column is 0.5–1.0 g. If necessary, split the extract into multiple aliquots to prevent column overload.

11.1.2.2 Elute the extract using the calibration data determined in Section 11.1.1. Collect the eluate in the K–D apparatus reserved in section 10.2.8.

11.1.3 Concentrate the cleaned up extract per sections 10.2.8 and 10.2.9 or 10.2.10.

11.1.4 Rinse the sample loading tube thoroughly with methylene chloride between extracts to prepare for the next sample.

11.1.5 If a particularly dirty extract is encountered, run a methylene chloride blank through the system to check for carry-over.

11.2 Sulfur removal.

NOTE: Separate procedures using copper or TBA sulfite are provided in this section for sulfur removal. They may be used separately or in combination, if desired.

11.2.1 Removal with copper (Reference 17).

NOTE: If an additional compound (Table 3) is to be determined; sulfur is to be removed; copper will be used for sulfur removal; and a sulfur matrix is known or suspected to be present, the laboratory must demonstrate that the additional compound can be successfully extracted and treated with copper in the sulfur matrix. Some of the additional compounds (Table 3) are known not to be amenable to sulfur removal with copper (e.g., Atrazine and Diazinon).

11.2.1.1 Quantitatively transfer the extract from section 10.2.8 to a 40- to 50-mL flask or bottle. If there is evidence of water in the concentrator tube after the transfer, rinse the tube with small portions of hexane:acetone (40:60) and add to the flask or bottle. Mark and set aside the concentrator tube for use in re-concentrating the extract.

11.2.1.2 Add 10–20 g of granular anhydrous sodium sulfate to the flask. Swirl to dry the extract.

11.2.1.3 Add activated copper (section 6.13.1.4) and allow to stand for 30—60 minutes, swirling occasionally. If the copper does not remain bright, add more and swirl occasionally for another 30–60 minutes.

11.2.1.4 After drying and sulfur removal, quantitatively transfer the extract to a nitrogen-evaporation vial or tube and proceed to section 10.2.10 for nitrogen evaporation and solvent exchange, taking care to leave the sodium sulfate and copper in the flask.

11.2.2 Removal with TBA sulfite.

11.2.2.1 Using small volumes of hexane, quantitatively transfer the extract to a 40- to 50-mL centrifuge tube with fluoropolymer-lined screw cap.

11.2.2.2 Add 1–2 mL of TBA sulfite reagent (section 6.13.2.4), 2–3 mL of 2-propanol, and approximately 0.7 g of sodium sulfite (section 6.13.2.2) crystals to the tube. Cap and

shake for 1–2 minutes. If the sample is colorless or if the initial color is unchanged, and if clear crystals (precipitated sodium sulfite) are observed, sufficient sodium sulfite is present. If the precipitated sodium sulfite disappears, add more crystalline sodium sulfite in approximately 0.5 g portions until a solid residue remains after repeated shaking.

11.2.2.3 Add 5–10 mL of reagent water and shake for 1–2 minutes. Centrifuge to settle the solids.

11.2.2.4 Quantitatively transfer the hexane (top) layer through a small funnel containing a few grams of granular anhydrous sodium sulfate to a nitrogen-evaporation vial or tube and proceed to section 10.2.10 for nitrogen evaporation and solvent exchange.

12. Gas Chromatography/Mass Spectrometry

12.1 Establish the operating conditions in Table 4 or 5 for analysis of a base/neutral or acid extract, respectively. For analysis of a combined extract (section 10.2.5, note), use the operating conditions in Table 4 MDLs and MLs for the analytes are given in Tables 1, 2, and 3. Retention times for many of the analytes are given in Tables 4 and 5. Examples of the separations achieved are shown in Figure 2 for the combined extract. Alternative columns or chromatographic conditions may be used if the requirements of section 8.2 are met. Verify system performance per section 13.

12.2 Analysis of a standard or extract.

12.2.1 Bring the standard or concentrated extract (section 10.2.9 or 10.2.11) to room temperature and verify that any precipitate has redissolved. Verify the level on the extract and bring to the mark with solvent if required.

12.2.2 Add the internal standard solution (section 6.9) to the extract. Mix thoroughly.

12.2.3 Inject an appropriate volume of the sample extract or standard solution using split, splitless, solvent purge, large-volume, or on-column injection. If the sample is injected manually the solvent-flush technique should be used. The injection volume depends upon the technique used and the ability to meet MDLs or reporting limits for regulatory compliance. Injected volumes must be the same for standards and sample extracts. Record the volume injected to two significant figures.

12.2.3.1 Start the GC column oven program upon injection. Start MS data collection after the solvent peak elutes. Stop data collection after benzo(ghi)perylene elutes for the base/neutral or combined fractions, or after pentachlorophenol elutes for the acid fraction. Return the column to the initial temperature for analysis of the next standard solution or extract.

12.2.3.2 If the concentration of any analyte of interest exceeds the calibration range, either extract and analyze a smaller sample volume, or dilute and analyze the diluted extract after bringing the concentrations of the internal standards to the levels in the undiluted extract.

12.2.4 Perform all qualitative and quantitative measurements as described in Sections 14 and 15. When standards and extracts are not being used for analyses, store them refrigerated at ≤6 °C protected from light in screw-cap vials equipped with un-pierced fluoropolymer-lined septa.

13. Performance Tests

13.1 At the beginning of each 12-hour shift during which standards or extracts will be analyzed, perform the tests in sections 13.2–13.4 to verify system performance. If an extract is concentrated for greater sensitivity (e.g., by SIM), all tests must be performed at levels consistent with the reduced extract volume.

13.2 DFTPP—Inject the DFTPP standard (section 6.10) and verify that the criteria for DFTPP in section 7.2.1.1 and Table 9A (Reference 18) for a quadrupole MS, or Table 9B (Reference 19) for a time-of-flight MS, are met.

13.3 GC resolution—The resolution should be verified on the mid-point concentration of the initial calibration as well as the laboratory designated continuing calibration verification level if closely eluting isomers are to be reported (e.g., benzo(b)fluoranthene and benzo(k)fluoranthene). Sufficient gas chromatographic resolution is achieved if the height of the valley between two isomer peaks is less than 50% of the average of the two peak heights.

13.4 Calibration verification—Verify calibration per sections 7.3 and Table 6.

13.5 Peak tailing—Verify the tailing factor specifications are met per Section 7.2.1.1.

13.6 Laboratory control sample and blank—Analyze the extracts of the LCS and blank at the beginning of analyses of samples in the extraction batch (section 3.1). The LCS must meet the requirements in section 8.4, and the blank must meet the requirements in section 8.5 before sample extracts may be analyzed.

13.7 Analysis of DFTPP, the DDT/Endrin decomposition test (if used), the LCS, and the blank are outside of the 12-hour analysis shift (section 3.1). The total time for DFTPP, DDT/Endrin, the LCS, the blank, and the 12-hour shift must not exceed 15 hours.

13.8 Decomposition of DDT and endrin—If DDT and/or endrin are to be determined, this test must be performed prior to calibration verification (section 13.4). The QC acceptance criteria (section 13.8.3) must be met before analyzing samples for DDE and/or Endrin. DDT decomposes to DDE and DDD. Endrin decomposes to endrin aldehyde and endrin ketone.

13.8.1 Inject 1 μL of the DDT and endrin decomposition solution (section 6.14). As

noted in section 6.14, other injection volumes may be used as long as the concentrations of DDT and endrin in the solution are adjusted to introduce the masses of the two analytes into the instrument that are listed in section 6.14.

13.8.2 Measure the areas of the peaks for DDT, DDE, DDD, Endrin, Endrin aldehyde, and Endrin ketone. Calculate the percent breakdown as shown in the equations below:

$$\%\ \text{breakdown of DDT} = \frac{\text{sum of degradation peak areas (DDD + DDE)}}{\text{sum of all peak areas (DDT + DDE + DDD)}} \times 100$$

$$\%\ \text{breakdown of Endrin} = \frac{\text{sum of degradation peak areas (Endrin aldehyde + Endrin ketone)}}{\text{sum of all peak areas (Endrin + Endrin aldehyde + Endrin ketone)}} \times 100$$

13.8.3 Both the % breakdown of DDT and of Endrin must be less than 20%, otherwise the system is not performing acceptably for DDT and endrin. In this case, repair the GC column system that failed and repeat the performance tests (sections 13.2 to 13.6) until the specification is met.

NOTE: DDT and endrin decomposition are usually caused by accumulation of particulates in the injector and in the front end of the column. Cleaning and silanizing the injection port liner, and breaking off a short section of the front end of the column will usually eliminate the decomposition problem. Either of these corrective actions may affect retention times, GC resolution, and calibration linearity.

14. Qualitative Identification

14.1 Identification is accomplished by comparison of data from analysis of a sample or blank with data stored in the GC/MS data system (sections 5.6.5 and 7.2.1.2). Identification of an analyte is confirmed per sections 14.1.1 through 14.1.4.

14.1.1 The signals for the quantitation and secondary m/z's stored in the data system for each analyte of interest must be present and must maximize within the same two consecutive scans.

14.1.2 The retention time for the analyte should be within ± 10 seconds of the analyte in the calibration verification run at the beginning of the shift (section 7.3 or 13.4).

NOTE: Retention time windows other than ± 10 seconds may be appropriate depending on the performance of the gas chromatograph or observed retention time drifts due to certain types of matrix effects. Relative retention time (RRT) may be used as an alternative to absolute retention times if retention time drift is a concern. RRT is a unitless quantity (see Sec. 22.2), although some procedures refer to ''RRT units'' in providing the specification for the agreement between the RRT values in the sample and the calibration verification or other standard. When significant retention time drifts are observed, dilutions or spiked samples may help the analyst determine the effects of the matrix on elution of the target analytes and to assist in qualitative identification.

14.1.3 Either the background corrected EICP areas, or the corrected relative intensities of the mass spectral peaks at the GC peak maximum, must agree within 50% to 200% (1/2 to 2 times) for the quantitation and secondary m/z's in the reference mass spectrum stored in the data system (section 7.2.1.2), or from a reference library. For example, if a peak has an intensity of 20% relative to the base peak, the analyte is identified if the intensity of the peak in the sample is in the range of 10% to 40% of the base peak. If identification is ambiguous, an experienced spectrometrist (section 1.7) must determine the presence or absence of the compound.

14.2 Structural isomers that produce very similar mass spectra should be identified as individual isomers if they have sufficiently different gas chromatographic retention times. Sufficient gas chromatographic resolution is achieved if the height of the valley between two isomer peaks is less than 50% of the average of the two peak heights. Otherwise, structural isomers are identified as isomeric pairs.

15. Calculations

15.1 When an analyte has been identified, quantitation of that analyte is based on the integrated abundance from the EICP of the primary characteristic m/z in Table 4 or 5. Calculate the concentration in the extract

using the response factor (RF) determined in Section 7.2.2 and Equation 2. If the concentration of an analyte exceeds the calibration range, dilute the extract by the minimum amount to bring the concentration into the calibration range, and re-analyze the extract. Determine a dilution factor (DF) from the amount of the dilution. For example, if the extract is diluted by a factor of 2, DF = 2.

$$C_{ex}\ (\mu g/mL) = \frac{A_s \times C_{is}}{A_{is} \times RF} \qquad \text{Equation 2}$$

where:

C_{ex} = Concentration of the analyte in the extract, in µg/mL, and the other terms are as defined in section 7.2.2.

Calculate the concentration of the analyte in the sample using the concentration in the extract, the extract volume, the sample volume, and the dilution factor, per Equation 3:

$$C_{samp}\ (\mu g/L) = \frac{C_{ex} \times V_{ex} \times DF}{V_s} \qquad \text{Equation 3}$$

where:

C_{samp} = Concentration of the analyte in the sample

C_{ex} = Concentration of the analyte in the extract, in µg/mL

V_{ex} = Volume of extract (mL)

V_s = Volume of sample (L)

DF = Dilution factor

15.2 Reporting of results. As noted in section 1.4.1, EPA has promulgated this method at 40 CFR part 136 for use in wastewater compliance monitoring under the National Pollutant Discharge Elimination System (NPDES). The data reporting practices described here are focused on such monitoring needs and may not be relevant to other uses of the method.

15.2.1 Report results for wastewater samples in µg/L without correction for recovery. (Other units may be used if required by in a permit.) Report all QC data with the sample results.

15.2.2 Reporting level. Unless specified otherwise by a regulatory authority or in a discharge permit, results for analytes that meet the identification criteria are reported down to the concentration of the ML established by the laboratory through calibration of the instrument (see section 7.3.2 and the glossary for the derivation of the ML). EPA considers the terms ''reporting limit,'' ''quantitation limit,'' ''limit of quantitation,'' and ''minimum level'' to be synonymous.

15.2.2.1 Report a result for each analyte in each field sample or QC standard at or above the ML to 3 significant figures. Report a result for each analyte found in each field sample or QC standard below the ML as ''ML'' where ML is the concentration of the analyte at the ML, or as required by the regulatory/control authority or permit. Report a result for each analyte in a blank at or above the MDL to 2 significant figures. Report a result for each analyte found in a blank below the MDL as ''MDL,'' where MDL is the concentration of the analyte at the MDL, or as required by the regulatory/control authority or permit.

15.2.2.2 In addition to reporting results for samples and blanks separately, the concentration of each analyte in a blank associated with the sample may be subtracted from the result for that sample, but only if requested or required by a regulatory authority or in a permit. In this case, both the sample result and the blank results must be reported together.

15.2.2.3 Report a result for an analyte found in a sample or extract that has been diluted at the least dilute level at which the area at the quantitation m/z is within the calibration range (*i.e.*, above the ML for the analyte) and the MS/MSD recovery and RPD are within their respective QC acceptance criteria (Table 6). This may require reporting results for some analytes from different analyses.

15.2.3 Results from tests performed with an analytical system that is not in control (*i.e.*, that does not meet acceptance criteria for any QC test in this method) must be documented and reported (e.g., as a qualifier on results), unless the failure is not required to be reported as determined by the regulatory/control authority. Results associated with a QC failure cannot be used to demonstrate regulatory compliance. QC failures do not relieve a discharger or permittee of reporting

timely results. If the holding time would be exceeded for a re-analysis of the sample, the regulatory/control authority should be consulted for disposition.

16. Method Performance

16.1 The basic version of this method was tested by 15 laboratories using reagent water, drinking water, surface water, and industrial wastewaters spiked at six concentrations over the range 5–1300 µg/L (Reference 2). Single operator precision, overall precision, and method accuracy were found to be directly related to the concentration of the analyte and essentially independent of the sample matrix. Linear equations to describe these relationships are presented in Table 7.

16.2 As noted in section 1.1, this method was validated through an interlaboratory study in the early 1980s. However, the fundamental chemistry principles used in this method remain sound and continue to apply.

16.3 A chromatogram of the combined acid/base/neutral calibration standard is shown in Figure 2.

17. Pollution Prevention

17.1 Pollution prevention encompasses any technique that reduces or eliminates the quantity or toxicity of waste at the point of generation. Many opportunities for pollution prevention exist in laboratory operations. EPA has established a preferred hierarchy of environmental management techniques that places pollution prevention as the management option of first choice. Whenever feasible, the laboratory should use pollution prevention techniques to address waste generation. When wastes cannot be reduced at the source, the Agency recommends recycling as the next best option.

17.2 The analytes in this method are used in extremely small amounts and pose little threat to the environment when managed properly. Standards should be prepared in volumes consistent with laboratory use to minimize the disposal of excess volumes of expired standards. This method utilizes significant quantities of methylene chloride. Laboratories are encouraged to recover and recycle this and other solvents during extract concentration.

17.3 For information about pollution prevention that may be applied to laboratories and research institutions, consult Less is Better: Laboratory Chemical Management for Waste Reduction, available from the American Chemical Society's Department of Governmental Relations and Science Policy, 1155 16th Street NW., Washington DC 20036, 202–872–4477.

18. Waste Management

18.1 The laboratory is responsible for complying with all Federal, State, and local regulations governing waste management, particularly the hazardous waste identification rules and land disposal restrictions, and to protect the air, water, and land by minimizing and controlling all releases from fume hoods and bench operations. Compliance is also required with any sewage discharge permits and regulations. An overview of requirements can be found in Environmental Management Guide for Small Laboratories (EPA 233–B–98–001).

18.2 Samples at pH <2, or pH >12, are hazardous and must be handled and disposed of as hazardous waste, or neutralized and disposed of in accordance with all federal, state, and local regulations. It is the laboratory's responsibility to comply with all federal, state, and local regulations governing waste management, particularly the hazardous waste identification rules and land disposal restrictions. The laboratory using this method has the responsibility to protect the air, water, and land by minimizing and controlling all releases from fume hoods and bench operations. Compliance is also required with any sewage discharge permits and regulations. For further information on waste management, see ''The Waste Management Manual for Laboratory Personnel,'' also available from the American Chemical Society at the address in section 17.3.

18.3 Many analytes in this method decompose above 500 °C. Low-level waste such as absorbent paper, tissues, and plastic gloves may be burned in an appropriate incinerator. Gross quantities of neat or highly concentrated solutions of toxic or hazardous chemicals should be packaged securely and disposed of through commercial or governmental channels that are capable of handling these types of wastes.

18.4 For further information on waste management, consult The Waste Management Manual for Laboratory Personnel and Less is Better-Laboratory Chemical Management for Waste Reduction, available from the American Chemical Society's Department of Government Relations and Science Policy, 1155 16th Street NW., Washington, DC 20036, 202–872–4477.

19. References

1. ''Sampling and Analysis Procedures for Screening of Industrial Effluents for Priority Pollutants,'' U.S. Environmental Protection Agency, Environmental Monitoring and Support Laboratory, Cincinnati, Ohio 45268, March 1977, Revised April 1977.
2. ''EPA Method Study 30, Method 625, Base/Neutrals, Acids, and Pesticides,'' EPA 600/4–84–053, National Technical Information Service, PB84–206572, Springfield, Virginia 22161, June 1984.
3. 40 CFR part 136, appendix B.

4. Olynyk, P., Budde, W.L. and Eichelberger, J.W. ''Method Detection Limit for Methods 624 and 625,'' Unpublished report, May 14, 1980.
5. Annual Book of ASTM Standards, Volume 11.02, D3694–96, ''Standard Practices for Preparation of Sample Containers and for Preservation of Organic Constituents,'' American Society for Testing and Materials, Philadelphia.
6. Solutions to Analytical Chemistry Problems with Clean Water Act Methods, EPA 821–R–07–002, March 2007.
7. ''Carcinogens-Working With Carcinogens,'' Department of Health, Education, and Welfare, Public Health Service, Center for Disease Control, National Institute for Occupational Safety and Health, Publication No. 77–206, August 1977.
8. ''OSHA Safety and Health Standards, General Industry,'' (29 CFR part 1910), Occupational Safety and Health Administration, OSHA 2206 (Revised, January 1976).
9. ''Safety in Academic Chemistry Laboratories,'' American Chemical Society Publication, Committee on Chemical Safety, 7th Edition, 2003.
10. Johnson, R.A., and Wichern, D.W., ''Applied Multivariate Statistical Analysis,'' 3rd edition, Prentice Hall, Englewood Cliffs, NJ, 1992.
11. 40 CFR 136.6(b)(4)(x).
12. 40 CFR 136.6(b)(2)(i).
13. Protocol for EPA Approval of New Methods for Organic and Inorganic Analytes in Wastewater and Drinking Water (EPA–821–B–98–003) March 1999.
14. Provost, L.P. and Elder, R.S. ''Interpretation of Percent Recovery Data,'' American Laboratory, 15, 58–63 (1983). (The value 2.44 used in the equation in section 8.3.3 is two times the value 1.22 derived in this report.)
15. ASTM Annual Book of Standards, Part 31, D3370–76. ''Standard Practices for Sampling Water,'' American Society for Testing and Materials, Philadelphia.
16. 40 CFR 136.3(a), Table IB, Chlorine—Total Residual.
17. ''Manual of Analytical Methods for the Analysis of Pesticides in Human and Environmental Samples,'' EPA–600/8–80–038, U.S. Environmental Protection Agency, Health Effects Research Laboratory, Research Triangle Park, North Carolina.
18. Eichelberger, J.W., Harris, L.E., and Budde, W.L. ''Reference Compound to Calibrate Ion Abundance Measurement in Gas Chromatography-Mass Spectrometry,'' Analytical Chemistry, 47, 995 (1975).
19. Letter of approval of acceptance criteria for DFTPP for time-of-flight mass spectrometers from William A. Telliard and Herb Brass of EPA to Jack Cochran of LECO Corporation, February 9, 2005.

20. Tables

TABLE 1—NON PESTICIDE/PCB BASE/NEUTRAL EXTRACTABLES [1]

Analyte	CAS registry	MDL [4] (ug/L)	ML [5] (ug/L)
Acenaphthene	83–32–9	1.9	5.7
Acenaphthylene	208–96–8	3.5	10.5
Anthracene	120–12–7	1.9	5.7
Benzidine [2]	92–87–5	44	132
Benzo(a)anthracene	56–55–3	7.8	23.4
Benzo(a)pyrene	50–32–8	2.5	7.5
Benzo(b)fluoranthene	205–99–2	4.8	14.4
Benzo(k)fluoranthene	207–08–9	2.5	7.5
Benzo(ghi)perylene	191–24–2	4.1	12.3
Benzyl butyl phthalate	85–68–7	2.5	7.5
bis(2-Chloroethoxy)methane	111–91–1	5.3	15.9
bis(2-Ethylhexyl)phthalate	117–81–7	2.5	7.5
bis(2-Chloroisopropyl) ether (2,2'-Oxybis[1-chloropropane])	108–60–1	5.7	17.1
4-Bromophenyl phenyl ether	101–55–3	1.9	5.7
2-Chloronaphthalene	91–58–7	1.9	5.7
4-Chlorophenyl phenyl ether	7005–72–3	4.2	12.6
Chrysene	218–01–9	2.5	7.5
Dibenz(a,h)anthracene	53–70–3	2.5	7.5
Di-*n*-butylphthalate	84–74–2	2.5	7.5
3,3'-Dichlorobenzidine	91–94–1	16.5	49.5
Diethyl phthalate	84–66–2	1.9	5.7
Dimethyl phthalate	131–11–3	1.6	4.8
2,4-Dinitrotoluene	121–14–2	5.7	17.1
2,6-Dinitrotoluene	606–20–2	1.9	5.7
Di-n-octylphthalate	117–84–0	2.5	7.5
Fluoranthene	206–44–0	2.2	6.6
Fluorene	86–73–7	1.9	5.7
Hexachlorobenzene	118–74–1	1.9	5.7
Hexachlorobutadiene	87–68–3	0.9	2.7
Hexachloroethane	67–72–1	1.6	4.8
Indeno(1,2,3-cd)pyrene	193–39–5	3.7	11.1

TABLE 1—NON PESTICIDE/PCB BASE/NEUTRAL EXTRACTABLES [1]—Continued

Analyte	CAS registry	MDL [4] (ug/L)	ML [5] (ug/L)
Isophorone	78–59–1	2.2	6.6
Naphthalene	91–20–3	1.6	4.8
Nitrobenzene	98–95–3	1.9	5.7
N-Nitrosodi-*n*-propylamine [3]	621–64–7	—	—
Phenanthrene	85–01–8	5.4	16.2
Pyrene	129–00–0	1.9	5.7
1,2,4-Trichlorobenzene	120–82–1	1.9	5.7

[1] All analytes in this table are Priority Pollutants (40 CFR part 423, appendix A).
[2] Included for tailing factor testing.
[3] See section 1.2.
[4] MDL values from the 1984 promulgated version of Method 625.
[5] ML = Minimum Level—see Glossary for definition and derivation.

TABLE 2—ACID EXTRACTABLES [1]

Analyte	CAS registry	MDL [3] (ug/L)	ML [4] (ug/L)
4-Chloro-3-methylphenol	59–50–7	3.0	9.0
2-Chlorophenol	95–57–8	3.3	9.9
2,4-Dichlorophenol	120–83–2	2.7	8.1
2,4-Dimethylphenol	105–67–9	2.7	8.1
2,4-Dinitrophenol	51–28–5	42	126
2-Methyl-4,6-dinitrophenol	534–52–1	24	72
2-Nitrophenol	88–75–5	3.6	10.8
4-Nitrophenol	100–02–7	2.4	7.2
Pentachlorophenol [2]	87–86–5	3.6	10.8
Phenol	108–95–2	1.5	4.5
2,4,6-Trichlorophenol	88–06–2	2.7	8.1

[1] All analytes in this table are Priority Pollutants (40 CFR part 423, appendix A).
[2] See section 1.2; included for tailing factor testing.
[3] MDL values from the 1984 promulgated version of Method 625.
[4] ML = Minimum Level—see Glossary for definition and derivation.

TABLE 3—ADDITIONAL EXTRACTABLE ANALYTES [1 2]

Analyte	CAS registry	MDL [7] (ug/L)	ML [8] (ug/L)
Acetophenone	98–86–2		
2-Acetylaminofluorene	53–96–3		
1-Acetyl-2-thiourea	591–08–2		
Alachlor	15972–60–8		
Aldrin [3]	309–00–2	1.9	5.7
Ametryn	834–12–8		
2-Aminoanthraquinone	117–79–3		
Aminoazobenzene	60–09–3		
4-Aminobiphenyl	92–67–1		
3-Amino-9-ethylcarbazole	132–32–1		
Anilazine	101–05–3		
Aniline	62–53–3		
o-Anisidine	90–04–0		
Aramite	140–57–8		
Atraton	1610–17–9		
Atrazine	1912–24–9		
Azinphos-methyl	86–50–0		
Barban	101–27–9		
Benzanthrone	82–05–3		
Benzenethiol	108–98–5		
Benzoic acid	65–85–0		
2,3-Benzofluorene	243–17–4		
p-Benzoquinone	106–51–4		
Benzyl alcohol	100–51–6		
alpha-BHC [3 4]	319–84–6		
beta-BHC [3]	319–85–7	3.1	9.3
gamma-BHC (Lindane) [3 4]	58–89–8	4.2	12.6
delta-BHC [3]	319–86–8		
Biphenyl	92–52–4		
Bromacil	314–40–9		
2-Bromochlorobenzene	694–80–4		
3-Bromochlorobenzene	108–39–2		

TABLE 3—ADDITIONAL EXTRACTABLE ANALYTES [1 2]—Continued

Analyte	CAS registry	MDL [7] (ug/L)	ML [8] (ug/L)
Bromoxynil	1689–84–5		
Butachlor	2318–4669		
Butylate	2008–41–5		
n-C10 (*n*-decane)	124–18–5		
n-C12 (*n*-undecane)	112–40–2		
n-C14 (*n*-tetradecane)	629–59–4		
n-C16 (*n*-hexadecane)	544–76–3		
n-C18 (*n*-octadecane)	593–45–3		
n-C20 (*n*-eicosane)	112–95–8		
n-C22 (*n*-docosane)	629–97–0		
n-C24 (*n*-tetracosane)	646–31–1		
n-C26 (*n*-hexacosane)	630–01–3		
n-C28 (*n*-octacosane)	630–02–4		
n-C30 (*n*-triacontane)	638–68–6		
Captafol	2425–06–1		
Captan	133–06–2		
Carbaryl	63–25–2		
Carbazole	86–74–8		
Carbofuran	1563–66–2		
Carboxin	5234–68 –4		
Carbophenothion	786–19–6		
Chlordane [3 5]	57–74–9		
bis(2-Chloroethyl) ether [3 4]	111–44–4	5.7	17.1
Chloroneb	2675–77–6		
4-Chloroaniline	106–47–8		
Chlorobenzilate	510–15–6		
Chlorfenvinphos	470–90–6		
4-Chloro-2-methylaniline	95–69–2		
3-(Chloromethyl)pyridine hydrochloride	6959–48–4		
4-Chloro-2-nitroaniline	89–63–4		
Chlorpropham	101–21–3		
Chlorothalonil	1897–45–6		
1-Chloronaphthalene	90–13–1		
3-Chloronitrobenzene	121–73–3		
4-Chloro-1,2-phenylenediamine	95–83–0		
4-Chloro-1,3-phenylenediamine	5131–60–2		
2-Chlorobiphenyl	2051–60–7		
Chlorpyrifos	2921–88–2		
Coumaphos	56–72–4		
m + *p*-Cresol	65794–96–9		
o-Cresol	95–48–7		
p-Cresidine	120–71–8		
Crotoxyphos	7700–17–6		
2-Cyclohexyl-4,6-dinitro-phenol	131–89–5		
Cyanazine	21725–46–2		
Cycloate	1134–23–2		
p-Cymene	99–87–6		
Dacthal (DCPA)	1861–32–1		
4,4'-DDD [3]	72–54–8	2.8	8.4
4,4'-DDE [3]	72–55–9	5.6	16.8
4,4'-DDT [3]	50–29–3	4.7	14.1
Demeton-O	298–03–3		
Demeton-S	126–75–0		
Diallate (*cis* or *trans*)	2303–16–4		
2,4-Diaminotoluene	95–80–7		
Diazinon	333–41–5		
Dibenz(a,j)acridine	224–42–0		
Dibenzofuran	132–64–9		
Dibenzo(a,e)pyrene	192–65–4		
Dibenzothiophene	132–65–0		
1,2-Dibromo-3-chloropropane	96–12–8		
3,5-Dibromo-4-hydroxybenzonitrile	1689–84–5		
2,6-Di-*tert*-butyl-p-benzoquinone	719–22–2		
Dichlone	117–80–6		
2,3-Dichloroaniline	608–27–5		
2,3-Dichlorobiphenyl	16605–91–7		
2,6-Dichloro-4-nitroaniline	99–30–9		
2,3-Dichloronitrobenzene	3209–22–1		
1,3-Dichloro-2-propanol	96–23–1		
2,6-Dichlorophenol	120–83–2		
Dichlorvos	62–73–7		

TABLE 3—ADDITIONAL EXTRACTABLE ANALYTES [1 2]—Continued

Analyte	CAS registry	MDL [7] (ug/L)	ML [8] (ug/L)
Dicrotophos	141–66–2		
Dieldrin [3]	60–57–1	2.5	7.5
1,2:3,4-Diepoxybutane	1464–53–5		
Di(2-ethylhexyl) adipate	103–23–1		
Diethylstilbestrol	56–53–1		
Diethyl sulfate	64–67–5		
Dilantin (5,5-Diphenylhydantoin)	57–41–0		
Dimethoate	60–51–5		
3,3′-Dimethoxybenzidine	119–90–4		
Dimethylaminoazobenzene	60–11–7		
7,12-Dimethylbenz(a)anthracene	57–97–6		
3,3′-Dimethylbenzidine	119–93–7		
N,N-Dimethylformamide	68–12–2		
3,6-Dimethylphenathrene	1576–67–6		
alpha, alpha-Dimethylphenethylamine	122–09–8		
Dimethyl sulfone	67–71–0		
1,2-Dinitrobenzene	528–29–0		
1,3-Dinitrobenzene	99–65–0		
1,4-Dinitrobenzene	100–25–4		
Dinocap	39300–45–3		
Dinoseb	88–85–7		
Diphenylamine	122–39–4		
Diphenyl ether	101–84–8		
1,2-Diphenylhydrazine	122–66–7		
Diphenamid	957–51–7		
Diphenyldisulfide	882–33–7		
Disulfoton	298–04–4		
Disulfoton sulfoxide	2497–07–6		
Disulfoton sulfone	2497–06–5		
Endosulfan I [4]	959–98–8		
Endosulfan II [3 4]	33213–65–9		
Endosulfan sulfate [3]	1031–07–8	5.6	16.8
Endrin [3 4]	72–20–8		
Endrin aldehyde [3 4]	7421–93–4		
Endrin ketone [3 4]	53494–70–5		
EPN	2104–64–5		
EPTC	759–94–4		
Ethion	563–12–2		
Ethoprop	13194–48–4		
Ethyl carbamate	51–79–6		
Ethyl methanesulfonate	65–50–0		
Ethylenethiourea	96–45–7		
Etridiazole	2593–15–9		
Ethynylestradiol-3-methyl ether	72–33–3		
Famphur	52–85–7		
Fenamiphos	22224–92–6		
Fenarimol	60168–88–9		
Fensulfothion	115–90–2		
Fenthion	55–38–9		
Fluchloralin	33245–39–5		
Fluridone	59756–60–4		
Heptachlor [3]	76–44–8	1.9	5.7
Heptachlor epoxide [3]	1024–57–3	2.2	6.6
2,2′,3,3′,4,4′,6-Heptachlorobiphenyl	52663–71–5		
2,2′,4,4′,5′,6-Hexachlorobiphenyl	60145–22–4		
Hexachlorocyclopentadiene [3 4]	77–47–4		
Hexachlorophene	70–30–4		
Hexachloropropene	1888–71–7		
Hexamethylphosphoramide	680–31–9		
Hexanoic acid	142–62–1		
Hexazinone	51235–04–2		
Hydroquinone	123–31–9		
Isodrin	465–73–6		
2-Isopropylnaphthalene	2027–17–0		
Isosafrole	120–58–1		
Kepone	143–50–0		
Leptophos	21609–90–5		
Longifolene	475–20–7		
Malachite green	569–64–2		
Malathion	121–75–5		
Maleic anhydride	108–31–6		

TABLE 3—ADDITIONAL EXTRACTABLE ANALYTES [1 2]—Continued

Analyte	CAS registry	MDL [7] (ug/L)	ML [8] (ug/L)
Merphos	150–50–5		
Mestranol	72–33–3		
Methapyrilene	91–80–5		
Methoxychlor	72–43–5		
2-Methylbenzothioazole	120–75–2		
3-Methylcholanthrene	56–49–5		
4,4′-Methylenebis(2-chloroaniline)	101–14–4		
4,4′-Methylenebis(N,N-dimethylaniline)	101–61–1		
4,5-Methylenephenanthrene	203–64–5		
1-Methylfluorene	1730–37–6		
Methyl methanesulfonate	66–27–3		
2-Methylnaphthalene	91–57–6		
Methylparaoxon	950–35–6		
Methyl parathion	298–00–0		
1-Methylphenanthrene	832–69–9		
2-(Methylthio)benzothiazole	615–22–5		
Metolachlor	5218–45–2		
Metribuzin	21087–64–9		
Mevinphos	7786–34–7		
Mexacarbate	315–18–4		
MGK 264	113–48–4		
Mirex	2385–85–5		
Molinate	2212–67–1		
Monocrotophos	6923–22–4		
Naled	300–76–5		
Napropamide	15299–99–7		
1,4-Naphthoquinone	130–15–4		
1-Naphthylamine	134–32–7		
2-Naphthylamine	91–59–8		
1,5-Naphthalenediamine	2243–62–1		
Nicotine	54–11–5		
5-Nitroacenaphthene	602–87–9		
2-Nitroaniline	88–74–4		
3-Nitroaniline	99–09–2		
4-Nitroaniline	100–01–6		
5-Nitro-*o*-anisidine	99–59–2		
4-Nitrobiphenyl	92–93–3		
Nitrofen	1836–75–5		
5-Nitro-*o*-toluidine	99–55–8		
Nitroquinoline-1-oxide	56–57–5		
N-Nitrosodi-*n*-butylamine [4]	924–16–3		
N-Nitrosodiethylamine [4]	55–18–5		
N-Nitrosodimethylamine [3 4]	62–75–9		
N-Nitrosodiphenylamine [3 4]	86–30–6		
N-Nitrosomethylethylamine [4]	10595–95–6		
N-Nitrosomethylphenylamine [4]	614–00–6		
N-Nitrosomorpholine [4]	59–89–2		
N-Nitrosopiperidine [4]	100–75–5		
N-Nitrosopyrrolidine [4]	930–55–2		
trans-Nonachlor	39765–80–5		
Norflurazon	27314–13–2		
2,2′,3,3′,4,5′,6,6′-Octachlorobiphenyl	40186–71–8		
Octamethyl pyrophosphoramide	152–16–9		
4,4'-Oxydianiline	101–80–4		
Parathion	56–38–2		
PCB–1016 [3 5]	12674–11–2		
PCB–1221 [3 5]	11104–28–2	30	90
PCB–1232 [3 5]	11141–16–5		
PCB–1242 [3 5]	53469–21–9		
PCB–1248 [3 5]	12672–29–6		
PCB–1254 [3 5]	11097–69–1	36	108
PCB–1260 [3 5]	11098–82–5		
PCB–1268 [3 5]	11100–14–4		
Pebulate	1114–71–2		
Pentachlorobenzene	608–93–5		
Pentachloronitrobenzene	82–68–8		
2,2′,3,4′,6-Pentachlorobiphenyl	68194–05–8		
Pentachloroethane	76–01–7		
Pentamethylbenzene	700–12–9		
Perylene	198–55–0		
Phenacetin	62–44–2		

TABLE 3—ADDITIONAL EXTRACTABLE ANALYTES [1] [2]—Continued

Analyte	CAS registry	MDL [7] (ug/L)	ML [8] (ug/L)
cis-Permethrin	61949–76–6		
trans-Permethrin	61949–77–7		
Phenobarbital	50–06–6		
Phenothiazene	92–84–2		
1,4-Phenylenediamine	624–18–0		
1-Phenylnaphthalene	605–02–7		
2-Phenylnaphthalene	612–94–2		
Phorate	298–02–2		
Phosalone	2310–18–0		
Phosmet	732–11–6		
Phosphamidon	13171–21–6		
Phthalic anhydride	85–44–9		
alpha-Picoline (2-Methylpyridine)	109–06–8		
Piperonyl sulfoxide	120–62–7		
Prometon	1610–18–0		
Prometryn	7287–19–6		
Pronamide	23950–58–5		
Propachlor	1918–16–7		
Propazine	139–40–2		
Propylthiouracil	51–52–5		
Pyridine	110–86–1		
Resorcinol (1,3-Benzenediol)	108–46–3		
Safrole	94–59–7		
Simazine	122–34–9		
Simetryn	1014–70–6		
Squalene	7683–64–9		
Stirofos	22248–79–9		
Strychnine	57–24–9		
Styrene [9]	100–42–5		
Sulfallate	95–06–7		
Tebuthiuron	34014–18–1		
Terbacil	5902–51–2		
Terbufos	13071–79–9		
Terbutryn	886–50–0		
alpha-Terpineol	98–55–5		
1,2,4,5-Tetrachlorobenzene	95–94–3		
2,2′,4,4′-Tetrachlorobiphenyl	2437–79–8		
2,3,7,8-Tetrachlorodibenzo-*p*-dioxin	1746–01–6		
2,3,4,6-Tetrachlorophenol	58–90–2		
Tetrachlorvinphos	22248–79–9		
Tetraethyl dithiopyrophosphate	3689–24–5		
Tetraethyl pyrophosphate	107–49–3		
Thianaphthene (2,3-Benzothiophene)	95–15–8		
Thioacetamide	62–55–5		
Thionazin	297–97–2		
Thiophenol (Benzenethiol)	108–98–5		
Thioxanthone	492–22–8		
Toluene-1,3-diisocyanate	26471–62–5		
Toluene-2,4-diisocyanate	584–84–9		
o-Toluidine	95–53–4		
Toxaphene [3] [5]	8001–35–2		
Triadimefon	43121–43–3		
1,2,3-Trichlorobenzene	87–61–6		
2,4,5-Trichlorobiphenyl	15862–07–4		
2,3,6-Trichlorophenol	933–75–5		
2,4,5-Trichlorophenol	95–95–4		
Tricyclazole	41814–78–2		
Trifluralin	1582–09–8		
1,2,3-Trimethoxybenzene	634–36–6		
2,4,5-Trimethylaniline	137–17–7		
Trimethyl phosphate	512–56–1		
Triphenylene	217–59–4		
Tripropyleneglycolmethyl ether	20324–33–8		
1,3,5-Trinitrobenzene	99–35–4		
Tris(2,3-dibromopropyl) phosphate	126–72–7		
Tri-*p*-tolyl phosphate	78–32–0		
O,O,O-Triethyl phosphorothioate	126–68–1		
Trithiane	291–29–4		
Vernolate	1929–77–7		

[1] Compounds that have been demonstrated amenable to extraction and gas chromatography.
[2] Determine each analyte in the fraction that gives the most accurate result.

[3] Priority Pollutant (40 CFR part 423, appendix A).
[4] See section 1.2.
[5] These compounds are mixtures of various isomers.
[6] Detected as azobenzene.
[7] MDL values from the 1984 promulgated version of Method 625.
[8] ML = Minimum Level—see Glossary for definition and derivation.
[9] Styrene may be susceptible to losses during sampling, preservation, and/or extraction of full-volume (1 L) water samples. However, styrene is not regulated at 40 CFR part 136, and it is also listed as an analyte in EPA Method 624.1 and EPA Method 1625C, where such losses may be less than using Method 625.1.

TABLE 4—CHROMATOGRAPHIC CONDITIONS AND CHARACTERISTIC m/z's FOR BASE/NEUTRAL EXTRACTABLES

Analyte	Retention time (sec) [1]	Characteristic m/z's					
		Electron impact ionization			Chemical ionization		
		Primary	Second	Second	Methane	Methane	Methane
N-Nitrosodimethylamine	385	42	74	44	.....		
bis(2-Chloroethyl) ether	704	93	63	95	63	107	109
bis(2-Chloroisopropyl) ether	799	45	77	79	77	135	137
Hexachloroethane	823	117	201	199	199	201	203
N-Nitrosodi-*n*-propylamine	830	130	42	101	.....		
Nitrobenzene	849	77	123	65	124	152	164
Isophorone	889	82	95	138	139	167	178
bis(2-Chloroethoxy) methane	939	93	95	123	65	107	137
1,2,4-Trichlorobenzene	958	180	182	145	181	183	209
Naphthalene	967	128	129	127	129	157	169
Hexachlorobutadiene	1006	225	223	227	223	225	227
Hexachlorocyclopentadiene	1142	237	235	272	235	237	239
2-Chloronaphthalene	1200	162	164	127	163	191	203
Acenaphthylene	1247	152	151	153	152	153	181
Dimethyl phthalate	1273	163	194	164	151	163	164
2,6-Dinitrotoluene	1300	165	89	121	183	211	223
Acenaphthene	1304	154	153	152	154	155	183
2,4-Dinitrotoluene	1364	165	63	182	183	211	223
Fluorene	1401	166	165	167	166	167	195
4-Chlorophenyl phenyl ether	1409	204	206	141	.....		
Diethyl phthalate	1414	149	177	150	177	223	251
N-Nitrosodiphenylamine	1464	169	168	167	169	170	198
4-Bromophenyl phenyl ether	1498	248	250	141	249	251	277
alpha-BHC	1514	183	181	109	.....		
Hexachlorobenzene	1522	284	142	249	284	286	288
beta-BHC	1544	183	181	109	.....		
gamma-BHC	1557	181	183	109	.....		
Phenanthrene	1583	178	179	176	178	179	207
Anthracene	1592	178	179	176	178	179	207
delta-BHC	1599	183	109	181	.....		
Heptachlor	1683	100	272	274	.....		
Di-*n*-butyl phthalate	1723	149	150	104	149	205	279
Aldrin	1753	66	263	220	.....		
Fluoranthene	1817	202	101	100	203	231	243
Heptachlor epoxide	1820	353	355	351	.....		
gamma-Chlordane	1834	373	375	377	.....		
Pyrene	1852	202	101	100	203	231	243
Benzidine[2]	1853	184	92	185	185	213	225
alpha-Chlordane	1854	373	375	377	.....		
Endosulfan I	1855	237	339	341	.....		
4,4′-DDE	1892	246	248	176	.....		
Dieldrin	1907	79	263	279	.....		
Endrin	1935	81	263	82	.....		
Endosulfan II	2014	237	339	341	.....		
4,4′-DDD	2019	235	237	165	.....		
Endrin aldehyde	2031	67	345	250	.....		
Butyl benzyl phthalate	2060	149	91	206	149	299	327
Endosulfan sulfate	2068	272	387	422	.....		
4,4′-DDT	2073	235	237	165	.....		
Chrysene	2083	228	226	229	228	229	257
3,3′-Dichlorobenzidine	2086	252	254	126	.....		
Benzo(a)anthracene	2090	228	229	226	228	229	257

TABLE 4—CHROMATOGRAPHIC CONDITIONS AND CHARACTERISTIC m/z's FOR BASE/NEUTRAL EXTRACTABLES—Continued

Analyte	Retention time (sec) [1]	Characteristic m/z's					
		Electron impact ionization			Chemical ionization		
		Primary	Second	Second	Methane	Methane	Methane
bis(2-Ethylhexyl) phthalate	2124	149	167	279	149		
Di-*n*-octyl phthalate	2240	149	43	57	.....		
Benzo(b)fluoranthene	2286	252	253	125	252	253	281
Benzo(k)fluoranthene	2293	252	253	125	252	253	281
Benzo(a)pyrene	2350	252	253	125	252	253	281
Indeno(1,2,3-cd) pyrene	2650	276	138	277	276	277	305
Dibenz(a,h)anthracene	2660	278	139	279	278	279	307
Benzo(ghi)perylene	2750	276	138	277	276	277	305
Toxaphene	.....	159	231	233	.....		
PCB 1016	.....	224	260	294	.....		
PCB 1221	.....	190	224	260	.....		
PCB 1232	.....	190	224	260	.....		
PCB 1242	.....	224	260	294	.....		
PCB 1248	.....	294	330	262	.....		
PCB 1254	.....	294	330	362	.....		
PCB 1260	.....	330	362	394			

[1] Column: 30 m x 0.25 mm ID; 94% methyl, 5% phenyl, 1% vinyl bonded phase fused silica capillary.
Conditions: 5 min at 30 °C; 30–280 at 8 °C per min; isothermal at 280 °C until benzo(ghi)perylene elutes.
Gas velocity: 30 cm/sec at 30 °C (at constant pressure).
[2] See section 1.2; included for tailing factor testing.

TABLE 5—CHROMATOGRAPHIC CONDITIONS AND CHARACTERISTIC m/z's FOR ACID EXTRACTABLES

Analyte	Retention Time (sec) [1]	Characteristic m/z's					
		Electron impact ionization			Chemical ionization		
		Prime	Second	Second	Methane	Methane	Methane
2-Chlorophenol	705	128	64	130	129	131	157
Phenol	700	94	65	66	95	123	135
2-Nitrophenol	900	139	65	109	140	168	122
2,4-Dimethylphenol	924	122	107	121	123	151	163
2,4-Dichlorophenol	947	162	164	98	163	165	167
4-Chloro-3-methylphenol	1091	142	107	144	143	171	183
2,4,6-Trichlorophenol	1165	196	198	200	197	199	201
2,4-Dinitrophenol	1325	184	63	154	185	213	225
4-Nitrophenol	1354	65	139	109	140	168	122
2-Methyl-4,6-dinitrophenol	1435	198	182	77	199	227	239
Pentachlorophenol	1561	266	264	268	267	265	269

Column: 30 m x 0.25 mm ID; 94% methyl, 5% phenyl, 1% vinyl bonded phase fused silica capillary.
Conditions: 5 min at 30 °C; 30–250 at 8 °C per min; isothermal at 280 °C until pentachlorophenol elutes.
Gas velocity: 30 cm/sec at 30 °C (at constant pressure).

TABLE 6—QC ACCEPTANCE CRITERIA—METHOD 625 [1]

Analyte	Range for Q (%) [2]	Limit for s (%) [3]	Range for $\bar{X}$ (%) [3]	Range for P_1, P_2(%) [3]	Limit for RPD (%)
Acenaphthene	70–130	29	60–132	47–145	48
Acenaphthylene	60–130	45	54–126	33–145	74
Aldrin	7–152	39	7–152	D–166	81
Anthracene	58–130	40	43–120	27–133	66
Benzo(a)anthracene	42–133	32	42–133	33–143	53
Benzo(b)fluoranthene	42–140	43	42–140	24–159	71
Benzo(k)fluoranthene	25–146	38	25–146	11–162	63
Benzo(a)pyrene	32–148	43	32–148	17–163	72
Benzo(ghi)perylene	13–195	61	D–195	D–219	97
Benzyl butyl phthalate	43–140	36	D–140	D–152	60
beta-BHC	42–131	37	42–131	24–149	61
delta-BHC	D–130	77	D–120	D–120	129
bis(2-Chloroethyl)ether	52–130	65	43–126	12–158	108
bis(2-Chloroethoxy)methane	52–164	32	49–165	33–184	54
bis(2-Chloroisopropyl) ether	63–139	46	63–139	36–166	76
bis(2-Ethylhexyl) phthalate	43–137	50	29–137	8–158	82

TABLE 6—QC ACCEPTANCE CRITERIA—METHOD 625 [1]—Continued

Analyte	Range for Q (%) [2]	Limit for s (%) [3]	Range for $\bar{X}$ (%) [3]	Range for P_1, P_2(%) [3]	Limit for RPD (%)
4-Bromophenyl phenyl ether	70–130	26	65–120	53–127	43
2-Chloronaphthalene	70–130	15	65–120	60–120	24
4-Chlorophenyl phenyl ether	57–145	36	38–145	25–158	61
Chrysene	44–140	53	44–140	17–168	87
4,4′-DDD	D–135	56	D–135	D–145	93
4,4′-DDE	19–130	46	19–120	4–136	77
4,4′-DDT	D–171	81	D–171	D–203	135
Dibenz(a,h)anthracene	13–200	75	D–200	D–227	126
Di-*n*-butyl phthalate	52–130	28	8–120	1–120	47
3,3′-Dichlorobenzidine	18–213	65	8–213	D–262	108
Dieldrin	70–130	38	44–119	29–136	62
Diethyl phthalate	47–130	60	D–120	D–120	100
Dimethyl phthalate	50–130	110	D–120	D–120	183
2,4-Dinitrotoluene	53–130	25	48–127	39–139	42
2,6-Dinitrotoluene	68–137	29	68–137	50–158	48
Di-*n*-octyl phthalate	21–132	42	19–132	4–146	69
Endosulfan sulfate	D–130	42	D–120	D–120	70
Endrin aldehyde	D–189	45	D–189	D–209	75
Fluoranthene	47–130	40	43–121	26–137	66
Fluorene	70–130	23	70–120	59–121	38
Heptachlor	D–172	44	D–172	D–192	74
Heptachlor epoxide	70–130	61	71–120	26–155	101
Hexachlorobenzene	38–142	33	8–142	D–152	55
Hexachlorobutadiene	68–130	38	38–120	24–120	62
Hexachloroethane	55–130	32	55–120	40–120	52
Indeno(1,2,3-cd)pyrene	13–151	60	D–151	D–171	99
Isophorone	52–180	56	47–180	21–196	93
Naphthalene	70–130	39	36–120	21–133	65
Nitrobenzene	54–158	37	54–158	35–180	62
N-Nitrosodi-*n*-propylamine	59–170	52	14–198	D–230	87
PCB–1260	19–130	77	19–130	D–164	128
Phenanthrene	67–130	24	65–120	54–120	39
Pyrene	70–130	30	70–120	52–120	49
1,2,4-Trichlorobenzene	61–130	30	57–130	44–142	50
4-Chloro-3-methylphenol	68–130	44	41–128	22–147	73
2-Chlorophenol	55–130	37	36–120	23–134	61
2,4-Dichlorophenol	64–130	30	53–122	39–135	50
2,4-Dimethylphenol	58–130	35	42–120	32–120	58
2,4-Dinitrophenol	39–173	79	D–173	D–191	132
2-Methyl-4,6-dinitrophenol	56–130	122	53–130	D–181	203
2-Nitrophenol	61–163	33	45–167	29–182	55
4-Nitrophenol	35–130	79	13–129	D–132	131
Pentachlorophenol	42–152	52	38–152	14–176	86
Phenol	48–130	39	17–120	5–120	64
2,4,6-Trichlorophenol	69–130	35	52–129	37–144	58

[1] Acceptance criteria are based upon method performance data in Table 7 and from EPA Method 1625. Where necessary, limits for recovery have been broadened to assure applicability to concentrations below those used to develop Table 7.
[2] Test concentration = 100 μg/mL.
[3] Test concentration = 100 μg/L.
Q = Calibration verification (sections 7.3.1 and 13.4).
s = Standard deviation for four recovery measurements in the DOC test (section 8.2.4).
$\bar{X}$ = Average recovery for four recovery measurements in the DOC test (section 8.2.4).
P_1, P_2 = MS/MSD recovery (section 8.3.2, section 8.4.2).
RPD = MS/MSD relative percent difference (RPD; section 8.3.3).
D = Detected; result must be greater than zero.

TABLE 7—PRECISION AND RECOVERY AS FUNCTIONS OF CONCENTRATION—METHOD 625 [1]

Analyte	Recovery, X′ (μg/L)	Single analyst precision, s_r' (μg/L)	Overall precision, S′ (μg/L)
Acenaphthene	0.96C + 0.19	0.15 $\bar{X}$ − 0.12	0.21 $\bar{X}$ − 0.67
Acenaphthylene	0.89C + 0.74	0.24 $\bar{X}$ − 1.06	0.26 $\bar{X}$ − 0.54
Aldrin	0.78C + 1.66	0.27 $\bar{X}$ − 1.28	0.43 $\bar{X}$ + 1.13
Anthracene	0.80C + 0.68	0.21 $\bar{X}$ − 0.32	0.27 $\bar{X}$ − 0.64
Benzo(a)anthracene	0.88C − 0.60	0.15 $\bar{X}$ + 0.93	0.26 $\bar{X}$ − 0.28
Benzo(b)fluoranthene	0.93C − 1.80	0.22 $\bar{X}$ + 0.43	0.29 $\bar{X}$ + 0.96
Benzo(k)fluoranthene	0.87C − 1.56	0.19 $\bar{X}$ + 1.03	0.35 $\bar{X}$ + 0.40
Benzo(a)pyrene	0.90C − 0.13	0.22 $\bar{X}$ + 0.48	0.32 $\bar{X}$ + 1.35
Benzo(ghi)perylene	0.98C − 0.86	0.29 $\bar{X}$ + 2.40	0.51 $\bar{X}$ − 0.44
Benzyl butyl phthalate	0.66C − 1.68	0.18 $\bar{X}$ + 0.94	0.53 $\bar{X}$ + 0.92

TABLE 7—PRECISION AND RECOVERY AS FUNCTIONS OF CONCENTRATION—METHOD 625 [1]—Continued

Analyte	Recovery, X′ (μg/L)	Single analyst precision, s_r' (μg/L)	Overall precision, S′ (μg/L)
beta-BHC	0.87C − 0.94	0.20 $\overline{X}$ − 0.58	0.30 $\overline{X}$ − 1.94
delta-BHC	0.29C − 1.09	0.34 $\overline{X}$ + 0.86	0.93 $\overline{X}$ − 0.17
bis(2-Chloroethyl) ether	0.86C − 1.54	0.35 $\overline{X}$ − 0.99	0.35 $\overline{X}$ + 0.10
bis(2-Chloroethoxy) methane	1.12C − 5.04	0.16 $\overline{X}$ + 1.34	0.26 $\overline{X}$ + 2.01
bis(2-Chloroisopropyl) ether	1.03C − 2.31	0.24 $\overline{X}$ + 0.28	0.25 $\overline{X}$ + 1.04
bis(2-Ethylhexyl) phthalate	0.84C − 1.18	0.26 $\overline{X}$ + 0.73	0.36 $\overline{X}$ + 0.67
4-Bromophenyl phenyl ether	0.91C − 1.34	0.13 $\overline{X}$ + 0.66	0.16 $\overline{X}$ + 0.66
2-Chloronaphthalene	0.89C + 0.01	0.07 $\overline{X}$ + 0.52	0.13 $\overline{X}$ + 0.34
4-Chlorophenyl phenyl ether	0.91C + 0.53	0.20 $\overline{X}$ − 0.94	0.30 $\overline{X}$ − 0.46
Chrysene	0.93C − 1.00	0.28 $\overline{X}$ + 0.13	0.33 $\overline{X}$ − 0.09
4,4′-DDD	0.56C − 0.40	0.29 $\overline{X}$ − 0.32	0.66 $\overline{X}$ − 0.96
4,4′-DDE	0.70C − 0.54	0.26 $\overline{X}$ − 1.17	0.39 $\overline{X}$ − 1.04
4,4′-DDT	0.79C − 3.28	0.42 $\overline{X}$ + 0.19	0.65 $\overline{X}$ − 0.58
Dibenz(a,h)anthracene	0.88C + 4.72	0.30 $\overline{X}$ + 8.51	0.59 $\overline{X}$ + 0.25
Di-*n*-butyl phthalate	0.59C + 0.71	0.13 $\overline{X}$ + 1.16	0.39 $\overline{X}$ + 0.60
3,3'-Dichlorobenzidine	1.23C − 12.65	0.28 $\overline{X}$ + 7.33	0.47 $\overline{X}$ + 3.45
Dieldrin	0.82C − 0.16	0.20 $\overline{X}$ − 0.16	0.26 $\overline{X}$ − 0.07
Diethyl phthalate	0.43C + 1.00	0.28 $\overline{X}$ + 1.44	0.52 $\overline{X}$ + 0.22
Dimethyl phthalate	0.20C + 1.03	0.54 $\overline{X}$ + 0.19	1.05 $\overline{X}$ − 0.92
2,4-Dinitrotoluene	0.92C − 4.81	0.12 $\overline{X}$ + 1.06	0.21 $\overline{X}$ + 1.50
2,6-Dinitrotoluene	1.06C − 3.60	0.14 $\overline{X}$ + 1.26	0.19 $\overline{X}$ + 0.35
Di-*n*-octyl phthalate	0.76C − 0.79	0.21 $\overline{X}$ + 1.19	0.37 $\overline{X}$ + 1.19
Endosulfan sulfate	0.39C + 0.41	0.12 $\overline{X}$ + 2.47	0.63 $\overline{X}$ − 1.03
Endrin aldehyde	0.76C − 3.86	0.18 $\overline{X}$ + 3.91	0.73 $\overline{X}$ − 0.62
Fluoranthene	0.81C + 1.10	0.22 $\overline{X}$ + 0.73	0.28 $\overline{X}$ − 0.60
Fluorene	0.90C − 0.00	0.12 $\overline{X}$ + 0.26	0.13 $\overline{X}$ + 0.61
Heptachlor	0.87C − 2.97	0.24 $\overline{X}$ − 0.56	0.50 $\overline{X}$ − 0.23
Heptachlor epoxide	0.92C − 1.87	0.33 $\overline{X}$ − 0.46	0.28 $\overline{X}$ + 0.64
Hexachlorobenzene	0.74C + 0.66	0.18 $\overline{X}$ − 0.10	0.43 $\overline{X}$ − 0.52
Hexachlorobutadiene	0.71C − 1.01	0.19 $\overline{X}$ + 0.92	0.26 $\overline{X}$ + 0.49
Hexachloroethane	0.73C − 0.83	0.17 $\overline{X}$ + 0.67	0.17 $\overline{X}$ + 0.80
Indeno(1,2,3-cd)pyrene	0.78C − 3.10	0.29 $\overline{X}$ + 1.46	0.50 $\overline{X}$ + 0.44
Isophorone	1.12C + 1.41	0.27 $\overline{X}$ + 0.77	0.33 $\overline{X}$ + 0.26
Naphthalene	0.76C + 1.58	0.21 $\overline{X}$ − 0.41	0.30 $\overline{X}$ − 0.68
Nitrobenzene	1.09C − 3.05	0.19 $\overline{X}$ + 0.92	0.27 $\overline{X}$ + 0.21
N-Nitrosodi-*n*-propylamine	1.12C − 6.22	0.27 $\overline{X}$ + 0.68	0.44 $\overline{X}$ + 0.47
PCB–1260	0.81C − 10.86	0.35 $\overline{X}$ + 3.61	0.43 $\overline{X}$ + 1.82
Phenanthrene	0.87C − 0.06	0.12 $\overline{X}$ + 0.57	0.15 $\overline{X}$ + 0.25
Pyrene	0.84C − 0.16	0.16 $\overline{X}$ + 0.06	0.15 $\overline{X}$ + 0.31
1,2,4-Trichlorobenzene	0.94C − 0.79	0.15 $\overline{X}$ + 0.85	0.21 $\overline{X}$ + 0.39
4-Chloro-3-methylphenol	0.84C + 0.35	0.23 $\overline{X}$ + 0.75	0.29 $\overline{X}$ + 1.31
2-Chlorophenol	0.78C + 0.29	0.18 $\overline{X}$ + 1.46	0.28 $\overline{X}$ + 0.97
2,4-Dichlorophenol	0.87C + 0.13	0.15 $\overline{X}$ + 1.25	0.21 $\overline{X}$ + 1.28
2,4-Dimethylphenol	0.71C + 4.41	0.16 $\overline{X}$ + 1.21	0.22 $\overline{X}$ + 1.31
2,4-Dinitrophenol	0.81C − 18.04	0.38 $\overline{X}$ + 2.36	0.42 $\overline{X}$ + 26.29
2-Methyl-4,6-Dinitrophenol	1.04C − 28.04	0.05 $\overline{X}$ + 42.29	0.26 $\overline{X}$ + 23.10
2-Nitrophenol	1.07C − 1.15	0.16 $\overline{X}$ + 1.94	0.27 $\overline{X}$ + 2.60
4-Nitrophenol	0.61C − 1.22	0.38 $\overline{X}$ + 2.57	0.44 $\overline{X}$ + 3.24
Pentachlorophenol	0.93C + 1.99	0.24 $\overline{X}$ + 3.03	0.30 $\overline{X}$ + 4.33
Phenol	0.43C + 1.26	0.26 $\overline{X}$ + 0.73	0.35 $\overline{X}$ + 0.58
2,4,6-Trichlorophenol	0.91C − 0.18	0.16 $\overline{X}$ + 2.22	0.22 $\overline{X}$ + 1.81

[1] Regressions based on data from Reference 2.
X′ = Expected recovery for one or more measurements of a sample containing a concentration of C, in μg/L.
s_r' = Expected single analyst standard deviation of measurements at an average concentration found of $\overline{X}$, in μg/L.
S′ = Expected interlaboratory standard deviation of measurements at an average concentration found of $\overline{X}$, in μg/L.
C = True value for the concentration, in μg/L.
$\overline{X}$ = Average recovery found for measurements of samples containing a concentration of C, in μg/L.

TABLE 8—SUGGESTED INTERNAL AND SURROGATE STANDARDS

Base/neutral fraction	Range for surrogate recovery (%) [1]	
	Calibration verification	Recovery from samples
Acenaphthalene-d_8	66–152	33–168
Acenaphthene-d_{10}	71–141	30–180
Aniline-d_5.		
Anthracene-d_{10}	58–171	23–142

TABLE 8—SUGGESTED INTERNAL AND SURROGATE STANDARDS—Continued

Base/neutral fraction	Range for surrogate recovery (%) [1]	
	Calibration verification	Recovery from samples
Benzo(a)anthracene-d_{12}	28–357	22–329
Benzo(a)pyrene-d_{12}	32–194	32–194
4-Chloroaniline-d_4	1–145	1–145
bis(2-Chloroethyl) ether-d_8	52–194	25–222
Chrysene-d_{12}	23–290	23–290
Decafluorobiphenyl.		
4,4′-Dibromobiphenyl.		
4,4′-Dibromooctafluorobiphenyl.		
1,4-Dichlorobenzene-d_4	65–153	11–245
2,2′-Difluorobiphenyl.		
Dimethyl phthalate-d_6	47–211	1–500
Fluoranthene-d_{10}	47–215	30–187
Fluorene-d_{10}	61–164	38–172
4-Fluoroaniline.		
1-Fluoronaphthalene.		
2-Fluoronaphthalene.		
2-Methylnaphthalene-d_{10}	50–150	50–150
Naphthalene-d_8	71–141	22–192
Nitrobenzene-d_5	46–219	15–314
2,3,4,5,6-Pentafluorobiphenyl.		
Perylene-d_{12}.		
Phenanthrene-d_{10}	67–149	34–168
Pyrene-d_{10}	48–210	28–196
Pyridine-d_5.		
Acid fraction.		
2-Chlorophenol-d_4	55–180	33–180
2,4-Dichlorophenol-d_3	64–157	34–182
4,6-Dinitro-2-methylphenol-d_2	56–177	22–307
2-Fluorophenol.		
4-Methylphenol-d_8	25–111	25–111
2-Nitrophenol-d_4	61–163	37–163
4-Nitrophenol-d_4	35–287	6–500
Pentafluorophenol.		
2-Perfluoromethylphenol.		
Phenol-d_5	48–208	8–424

[1] Recovery from samples is the wider of the criteria in the CLP SOW for organics or in Method 1625.

TABLE 9A—DFTPP KEY m/z's AND ABUNDANCE CRITERIA FOR QUADRUPOLE INSTRUMENTS [1]

m/z	Abundance criteria
51	30–60 percent of m/z 198.
68	Less than 2 percent of m/z 69.
70	Less than 2 percent of m/z 69.
127	40–60 percent of base peak m/z 198.
197	Less than 1 percent of m/z 198.
198	Base peak, 100 percent relative abundance.
199	5–9 percent of m/z 198.
275	10–30 percent of m/z 198.
365	Greater than 1 percent of m/z 198.
441	Present but less than m/z 443.
442	40–100 percent of m/z 198.
443	17–23 percent of m/z 442.

[1] Criteria in these tables are for quadrupole and time-of-flight instruments. Alternative tuning criteria from other published EPA reference methods may be used provided method performance is not adversely affected. Alternative tuning criteria specified by an instrument manufacturer may also be used for another type of mass spectrometer, provided method performance is not adversely affected.

TABLE 9B—DFTPP KEY m/z's AND ABUNDANCE CRITERIA FOR TIME-OF-FLIGHT INSTRUMENTS [1]

m/z	Abundance criteria
51	10–85 percent of the base peak.
68	Less than 2 percent of m/z 69.
70	Less than 2 percent of m/z 69.
127	10–80 percent of the base peak.
197	Less than 2 percent of Mass 198.

TABLE 9B—DFTPP KEY m/z's AND ABUNDANCE CRITERIA FOR TIME-OF-FLIGHT INSTRUMENTS [1]—Continued

m/z	Abundance criteria
198	Base peak, or greater than 50% of m/z 442.
199	5–9 percent of m/z 198.
275	10–60 percent of the base peak.
365	Greater than 0.5 percent of m/z 198.
441	Less than 150 percent of m/z 443.
442	Base peak or greater than 30 percent of m/z 198.
443	15–24 percent of m/z 442.

[1] Criteria in these tables are for quadrupole and time-of-flight instruments. Alternative tuning criteria from other published EPA reference methods may be used provided method performance is not adversely affected. Alternative tuning criteria specified by an instrument manufacturer may also be used for another type of mass spectrometer, or for an alternative carrier gas, provided method performance is not adversely affected.

21. FIGURES

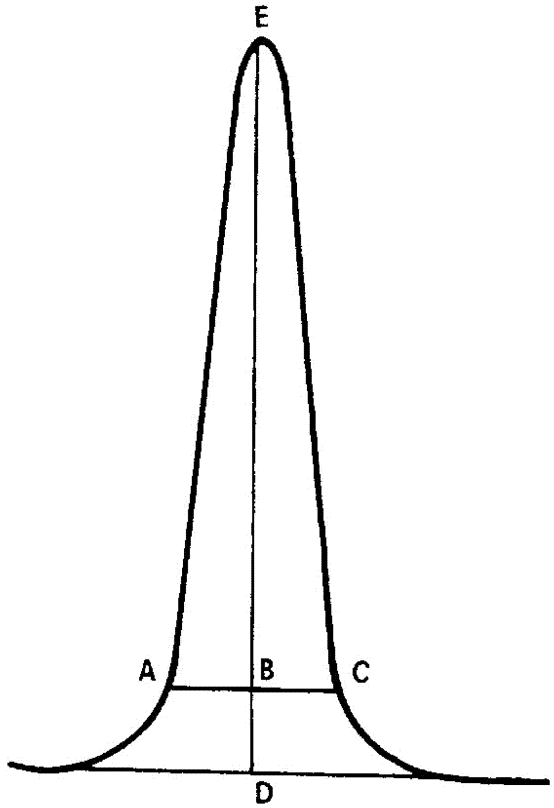

$$\text{TAILING FACTOR} = \frac{BC}{AB}$$

Example calculation: Peak Height = DE = 100 mm
10% Peak Height = BD = 10 mm
Peak Width at 10% Peak Height = AC = 23 mm
AB = 11 mm
BC = 12 mm

$$\text{Therefore: Tailing Factor} = \frac{12}{11} = 1.1$$

Figure 1 Tailing factor calculation

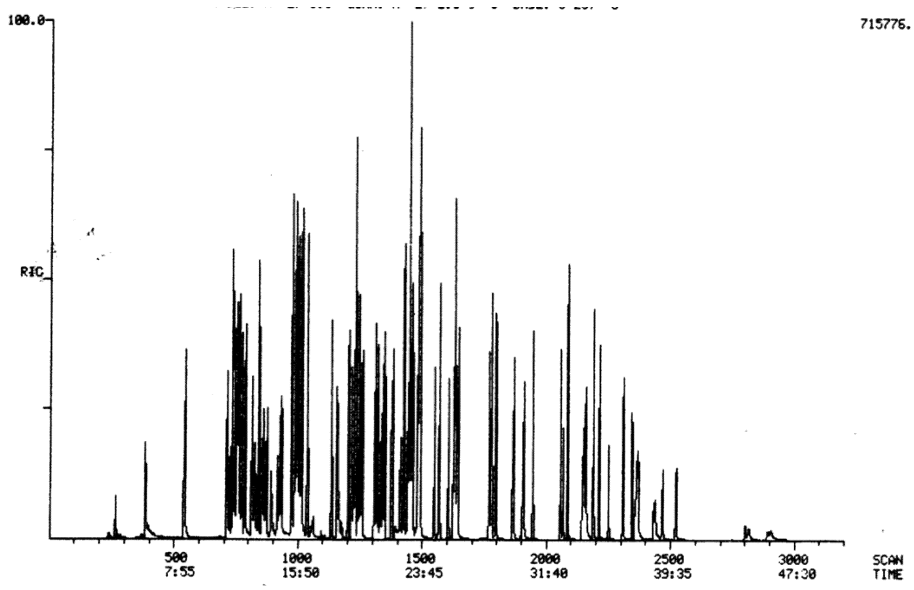

Figure 2 Chromatogram of combined acid/base/neutral standard

22. Glossary

These definitions and purposes are specific to this method but have been conformed to common usage to the extent possible.

22.1 Units of weight and measure and their abbreviations.

22.1.1 Symbols.

°C degrees Celsius
µg microgram
µL microliter
< less than
> greater than
≤ less than or equal to
% percent

22.1.2 Abbreviations (in alphabetical order).

cm centimeter
g gram
h hour
ID inside diameter
in. inch
L liter
m mass or meter
mg milligram
min minute
mL milliliter
mm millimeter
ms millisecond
m/z mass-to-charge ratio
N normal; gram molecular weight of solute divided by hydrogen equivalent of solute, per liter of solution
ng nanogram
pg picogram
ppb part-per-billion
ppm part-per-million
ppt part-per-trillion
psig pounds-per-square inch gauge

22.2 Definitions and acronyms (in alphabetical order).

Analyte—A compound or mixture of compounds (e.g., PCBs) tested for by this method. The analytes are listed in Tables 1–3.

Batch—See Extraction.

Blank—An aliquot of reagent water that is treated exactly as a sample including exposure to all glassware, equipment, solvents, reagents, internal standards, and surrogates that are used with samples. The blank is used to determine if analytes or interferences are present in the laboratory environment, the reagents, or the apparatus.

Calibration—The process of determining the relationship between the output or response of a measuring instrument and the value of an input standard. Historically, EPA has referred to a multi-point calibration as the ''initial calibration,'' to differentiate it from a single-point calibration verification.

Calibration standard—A solution prepared from stock solutions and/or a secondary standards and containing the analytes of interest, surrogates, and internal standards. The calibration standard is used to calibrate the response of the GC/MS instrument against analyte concentration.

Calibration verification standard—The mid-point calibration standard used to verify calibration. See sections 7.3 and 13.4.

Descriptor—In SIM, the beginning and ending retention times for the RT window, the m/z's sampled in the RT window, and the dwell time at each m/z.

Extracted ion current profile (EICP)—The line described by the signal at a given m/z.

Extraction Batch—A set of up to 20 field samples (not including QC samples) started through the extraction process on a given 24-hour shift (section 3.1). Each extraction batch must be accompanied by a blank (section 8.5), a laboratory control sample (LCS, section 8.4), and a matrix spike and duplicate (MS/MSD; Section 8.3), resulting in a minimum of five analyses (1 sample, 1 blank, 1 LCS, 1 MS, and 1 MSD) and a maximum of 24 analyses (20 field samples, 1 blank, 1 LCS, 1 MS, and 1 MSD) for the batch. If greater than 20 samples are to be extracted in a 24-hour shift, the samples must be separated into extraction batches of 20 or fewer samples.

Field Duplicates—Two samples collected at the same time and placed under identical conditions, and treated identically throughout field and laboratory procedures. Results of analyses of the field duplicates provide an estimate of the precision associated with sample collection, preservation, and storage, as well as with laboratory procedures.

Field blank—An aliquot of reagent water or other reference matrix that is placed in a sample container in the field, and treated as a sample in all respects, including exposure to sampling site conditions, storage, preservation, and all analytical procedures. The purpose of the field blank is to determine if the field or sample transporting procedures and environments have contaminated the sample.

GC—Gas chromatograph or gas chromatography.

Internal standard—A compound added to an extract or standard solution in a known amount and used as a reference for quantitation of the analytes of interest and surrogates. In this method the internal standards are stable isotopically labeled analogs of selected method analytes (Table 8). Also see Internal standard quantitation.

Internal standard quantitation—A means of determining the concentration of an analyte of interest (Tables 1–3) by reference to a compound not expected to be found in a sample.

DOC—Initial demonstration of capability (section 8.2); four aliquots of reagent water spiked with the analytes of interest and analyzed to establish the ability of the laboratory to generate acceptable precision and recovery. A DOC is performed prior to the first time this method is used and any time the method or instrumentation is modified.

Laboratory Control Sample (LCS; laboratory fortified blank; section 8.4)—An aliquot of reagent water spiked with known quantities of the analytes of interest and surrogates. The LCS is analyzed exactly like a sample. Its purpose is to assure that the results produced by the laboratory remain within the limits specified in this method for precision and recovery.

Laboratory fortified sample matrix—See Matrix spike.

Laboratory reagent blank—A blank run on laboratory reagents; e.g., methylene chloride (section 11.1.5).

Matrix spike (MS) and matrix spike duplicate (MSD) (laboratory fortified sample matrix and duplicate)—Two aliquots of an environmental sample to which known quantities of the analytes of interest and surrogates are added in the laboratory. The MS/MSD are prepared and analyzed exactly like a field sample. Their purpose is to quantify any additional bias and imprecision caused by the sample matrix. The background concentrations of the analytes in the sample matrix must be determined in a separate aliquot and the measured values in the MS/MSD corrected for background concentrations.

May—This action, activity, or procedural step is neither required nor prohibited.

May not—This action, activity, or procedural step is prohibited.

Method blank—See blank.

Method detection limit (MDL)—A detection limit determined by the procedure at 40 CFR part 136, appendix B. The MDLs determined by EPA in the original version of the method are listed in Tables 1, 2 and 3. As noted in section 1.5, use the MDLs in Tables 1, 2, and 3 in conjunction with current MDL data from the laboratory actually analyzing samples to assess the sensitivity of this procedure relative to project objectives and regulatory requirements (where applicable).

Minimum level (ML)—The term ''minimum level'' refers to either the sample concentration equivalent to the lowest calibration point in a method or a multiple of the method detection limit (MDL), whichever is higher. Minimum levels may be obtained in several ways: They may be published in a method; they may be based on the lowest acceptable calibration point used by a laboratory; or they may be calculated by multiplying the MDL in a method, or the MDL determined by a laboratory, by a factor of 3. For the purposes of NPDES compliance monitoring, EPA considers the following terms to be synonymous: ''quantitation limit,'' ''reporting limit,'' and ''minimum level.''

MS—Mass spectrometer or mass spectrometry, or matrix spike (a QC sample type).

MSD—Matrix spike duplicate (a QC sample type).

Must—This action, activity, or procedural step is required.

m/z—The ratio of the mass of an ion (m) detected in the mass spectrometer to the charge (z) of that ion.

Preparation blank—See blank.

Quality control check sample (QCS)—See Laboratory Control Sample.

Reagent water—Water demonstrated to be free from the analytes of interest and potentially interfering substances at the MDLs for the analytes in this method.

Regulatory compliance limit (or regulatory concentration limit)—A limit on the concentration or amount of a pollutant or contaminant specified in a nationwide standard, in a permit, or otherwise established by a regulatory/control authority.

Relative retention time (RRT)—The ratio of the retention time of an analyte to the retention time of its associated internal standard. RRT compensates for small changes in the GC temperature program that can affect the absolute retention times of the analyte and internal standard. RRT is a unitless quantity.

Relative standard deviation (RSD)—The standard deviation times 100 divided by the mean. Also termed ''coefficient of variation.''

RF—Response factor. See section 7.2.2.

RSD—See relative standard deviation.

Safety Data Sheet (SDS)—Written information on a chemical's toxicity, health hazards, physical properties, fire, and reactivity, including storage, spill, and handling precautions that meet the requirements of OSHA, 29 CFR 1910.1200(g) and appendix D to §1910.1200. United Nations Globally Harmonized System of Classification and Labelling of Chemicals (GHS), third revised edition, United Nations, 2009.

Selected Ion Monitoring (SIM)—An MS technique in which a few m/z's are monitored. When used with gas chromatography, the m/z's monitored are usually changed periodically throughout the chromatographic run, to correlate with the characteristic m/z's of the analytes, surrogates, and internal standards as they elute from the chromatographic column. The technique is often used to increase sensitivity and minimize interferences.

Signal-to-noise ratio (S/N)—The height of the signal as measured from the mean (average) of the noise to the peak maximum divided by the width of the noise.

Should—This action, activity, or procedural step is suggested but not required.

SPE—Solid-phase extraction; an extraction technique in which an analyte is extracted from an aqueous solution by passage over or through a material capable of reversibly adsorbing the analyte. Also termed liquid-solid extraction.

Stock solution—A solution containing an analyte that is prepared using a reference material traceable to EPA, the National Institute of Science and Technology (NIST), or a source that will attest to the purity, authenticity, and concentration of the standard.

Surrogate—A compound unlikely to be found in a sample, and which is spiked into sample in a known amount before extraction or other processing, and is quantitated with the same procedures used to quantify other sample components. The purpose of the surrogate is to monitor method performance with each sample.

METHOD 1613, REVISION B

Tetra- Through Octa-Chlorinated Dioxins and Furans by Isotope Dilution HRGC/HRMS

1.0 Scope and Application

1.1 This method is for determination of tetra- through octa-chlorinated dibenzo-p-dioxins (CDDs) and dibenzofurans (CDFs) in water, soil, sediment, sludge, tissue, and other sample matrices by high resolution gas chromatography/high resolution mass spectrometry (HRGC/HRMS). The method is for use in EPA's data gathering and monitoring programs associated with the Clean Water Act, the Resource Conservation and Recovery Act, the Comprehensive Environmental Response, Compensation and Liability Act, and the Safe Drinking Water Act. The method is based on a compilation of EPA, industry, commercial laboratory, and academic methods (References 1–6).

1.2 The seventeen 2,3,7,8-substituted CDDs/CDFs listed in Table 1 may be determined by this method. Specifications are also provided for separate determination of 2,3,7,8-tetrachloro-dibenzo-p-dioxin (2,3,7,8-TCDD) and 2,3,7,8-tetrachloro-dibenzofuran (2,3,7,8-TCDF).

1.3 The detection limits and quantitation levels in this method are usually dependent on the level of interferences rather than instrumental limitations. The minimum levels (MLs) in Table 2 are the levels at which the CDDs/CDFs can be determined with no interferences present. The Method Detection Limit (MDL) for 2,3,7,8-TCDD has been determined as 4.4 pg/L (parts-per-quadrillion) using this method.

1.4 The GC/MS portions of this method are for use only by analysts experienced with HRGC/HRMS or under the close supervision of such qualified persons. Each laboratory that uses this method must demonstrate the ability to generate acceptable results using the procedure in Section 9.2.

1.5 This method is ''performance-based''. The analyst is permitted to modify the method to overcome interferences or lower the cost of measurements, provided that all performance criteria in this method are met. The requirements for establishing method equivalency are given in Section 9.1.2.

1.6 Any modification of this method, beyond those expressly permitted, shall be considered a major modification subject to application and approval of alternate test procedures under 40 CFR 136.4 and 136.5.

2.0 Summary of Method

Flow charts that summarize procedures for sample preparation, extraction, and analysis are given in Figure 1 for aqueous and solid samples, Figure 2 for multi-phase samples, and Figure 3 for tissue samples.

2.1 Extraction.

2.1.1 Aqueous samples (samples containing less than 1% solids)—Stable isotopically labeled analogs of 15 of the 2,3,7,8-substituted CDDs/CDFs are spiked into a 1 L sample, and the sample is extracted by one of three procedures:

2.1.1.1 Samples containing no visible particles are extracted with methylene chloride in a separatory funnel or by the solid-phase extraction technique summarized in Section 2.1.1.3. The extract is concentrated for cleanup.

2.1.1.2 Samples containing visible particles are vacuum filtered through a glass-fiber filter. The filter is extracted in a Soxhlet/Dean-Stark (SDS) extractor (Reference 7), and the filtrate is extracted with methylene chloride in a separatory funnel. The methylene chloride extract is concentrated and combined with the SDS extract prior to cleanup.

2.1.1.3 The sample is vacuum filtered through a glass-fiber filter on top of a solid-phase extraction (SPE) disk. The filter and disk are extracted in an SDS extractor, and the extract is concentrated for cleanup.

2.1.2 Solid, semi-solid, and multi-phase samples (but not tissue)—The labeled compounds are spiked into a sample containing 10 g (dry weight) of solids. Samples containing multiple phases are pressure filtered and any aqueous liquid is discarded. Coarse solids are ground or homogenized. Any non-aqueous liquid from multi-phase samples is combined with the solids and extracted in an SDS extractor. The extract is concentrated for cleanup.

2.1.3 Fish and other tissue—The sample is extracted by one of two procedures:

2.1.3.1 Soxhlet or SDS extraction—A 20 g aliquot of sample is homogenized, and a 10 g aliquot is spiked with the labeled compounds. The sample is mixed with sodium sulfate, allowed to dry for 12–24 hours, and extracted for 18–24 hours using methylene chloride:hexane (1:1) in a Soxhlet extractor. The extract is evaporated to dryness, and the lipid content is determined.

2.1.3.2 HCl digestion—A 20 g aliquot is homogenized, and a 10 g aliquot is placed in a bottle and spiked with the labeled compounds. After equilibration, 200 mL of hydrochloric acid and 200 mL of methylene chloride:hexane (1:1) are added, and the bottle is agitated for 12–24 hours. The extract is evaporated to dryness, and the lipid content is determined.

2.2 After extraction, $^{37}Cl_4$-labeled 2,3,7,8-TCDD is added to each extract to measure the efficiency of the cleanup process. Sample cleanups may include back-extraction with acid and/or base, and gel permeation, alumina, silica gel, Florisil and activated carbon chromatography. High-performance liquid chromatography (HPLC) can be used for further isolation of the 2,3,7,8-isomers or other specific isomers or congeners. Prior to the cleanup procedures cited above, tissue extracts are cleaned up using an anthropogenic isolation column, a batch silica gel adsorption, or sulfuric acid and base back-extraction, depending on the tissue extraction procedure used.

2.3 After cleanup, the extract is concentrated to near dryness. Immediately prior to injection, internal standards are added to each extract, and an aliquot of the extract is injected into the gas chromatograph. The analytes are separated by the GC and detected by a high-resolution (≥10,000) mass spectrometer. Two exact m/z's are monitored for each analyte.

2.4 An individual CDD/CDF is identified by comparing the GC retention time and ion-abundance ratio of two exact m/z's with the corresponding retention time of an authentic standard and the theoretical or acquired ion-abundance ratio of the two exact m/z's. The non-2,3,7,8 substituted isomers and congeners are identified when retention times and ion-abundance ratios agree within predefined limits. Isomer specificity for 2,3,7,8-TCDD and 2,3,7,8-TCDF is achieved using GC columns that resolve these isomers from the other tetra-isomers.

2.5 Quantitative analysis is performed using selected ion current profile (SICP) areas, in one of three ways:

2.5.1 For the 15 2,3,7,8-substituted CDDs/CDFs with labeled analogs (see Table 1), the GC/MS system is calibrated, and the concentration of each compound is determined using the isotope dilution technique.

2.5.2 For 1,2,3,7,8,9-HxCDD, OCDF, and the labeled compounds, the GC/MS system is calibrated and the concentration of each compound is determined using the internal standard technique.

2.5.3 For non-2,3,7,8-substituted isomers and for all isomers at a given level of chlorination (*i.e.*, total TCDD), concentrations are determined using response factors from calibration of the CDDs/CDFs at the same level of chlorination.

2.6 The quality of the analysis is assured through reproducible calibration and testing of the extraction, cleanup, and GC/MS systems.

3.0 Definitions

Definitions are given in the glossary at the end of this method.

4.0 Contamination and Interferences

4.1 Solvents, reagents, glassware, and other sample processing hardware may yield artifacts and/or elevated baselines causing misinterpretation of chromatograms (References 8–9). Specific selection of reagents and purification of solvents by distillation in all-glass systems may be required. Where possible, reagents are cleaned by extraction or solvent rinse.

4.2 Proper cleaning of glassware is extremely important, because glassware may not only contaminate the samples but may also remove the analytes of interest by adsorption on the glass surface.

4.2.1 Glassware should be rinsed with solvent and washed with a detergent solution as soon after use as is practical. Sonication of glassware containing a detergent solution for approximately 30 seconds may aid in cleaning. Glassware with removable parts, particularly separatory funnels with fluoropolymer stopcocks, must be disassembled prior to detergent washing.

4.2.2 After detergent washing, glassware should be rinsed immediately, first with methanol, then with hot tap water. The tap water rinse is followed by another methanol rinse, then acetone, and then methylene chloride.

4.2.3 Do not bake reusable glassware in an oven as a routine part of cleaning. Baking may be warranted after particularly dirty samples are encountered but should be minimized, as repeated baking of glassware may cause active sites on the glass surface that will irreversibly adsorb CDDs/CDFs.

4.2.4 Immediately prior to use, the Soxhlet apparatus should be pre-extracted with toluene for approximately three hours (see Sections 12.3.1 through 12.3.3). Separatory funnels should be shaken with methylene chloride/toluene (80/20 mixture) for two minutes, drained, and then shaken with pure methylene chloride for two minutes.

4.3 All materials used in the analysis shall be demonstrated to be free from interferences by running reference matrix method blanks initially and with each sample batch (samples started through the extraction process on a given 12-hour shift, to a maximum of 20 samples).

4.3.1 The reference matrix must simulate, as closely as possible, the sample matrix under test. Ideally, the reference matrix should not contain the CDDs/CDFs in detectable amounts, but should contain potential interferents in the concentrations expected to be found in the samples to be analyzed. For example, a reference sample of human adipose tissue containing pentachloronaphthalene can be used to exercise the cleanup systems when samples containing pentachloronaphthalene are expected.

4.3.2 When a reference matrix that simulates the sample matrix under test is not available, reagent water (Section 7.6.1) can be used to simulate water samples; playground sand (Section 7.6.2) or white quartz sand (Section 7.3.2) can be used to simulate soils; filter paper (Section 7.6.3) can be used to simulate papers and similar materials; and corn oil (Section 7.6.4) can be used to simulate tissues.

4.4 Interferences coextracted from samples will vary considerably from source to source, depending on the diversity of the site being sampled. Interfering compounds may be present at concentrations several orders of magnitude higher than the CDDs/CDFs. The most frequently encountered interferences are chlorinated biphenyls, methoxy biphenyls, hydroxydiphenyl ethers, benzylphenyl ethers, polynuclear aromatics, and pesticides. Because very low levels of CDDs/CDFs are measured by this method, the elimination of interferences is essential. The cleanup steps given in Section 13 can be used to reduce or eliminate these interferences and thereby permit reliable determination of the CDDs/CDFs at the levels shown in Table 2.

4.5 Each piece of reusable glassware should be numbered to associate that glassware with the processing of a particular sample. This will assist the laboratory in tracking possible sources of contamination for individual samples, identifying glassware associated with highly contaminated samples that may require extra cleaning, and determining when glassware should be discarded.

4.6 Cleanup of tissue—The natural lipid content of tissue can interfere in the analysis of tissue samples for the CDDs/CDFs. The lipid contents of different species and portions of tissue can vary widely. Lipids are soluble to varying degrees in various organic solvents and may be present in sufficient quantity to overwhelm the column chromatographic cleanup procedures used for cleanup of sample extracts. Lipids must be removed by the lipid removal procedures in Section 13.7, followed by alumina (Section 13.4) or Florisil (Section 13.8), and carbon (Section 13.5) as minimum additional cleanup steps. If chlorodiphenyl ethers are detected, as indicated by the presence of peaks at the exact m/z's monitored for these interferents, alumina and/or Florisil cleanup must be employed to eliminate these interferences.

5.0 Safety

5.1 The toxicity or carcinogenicity of each compound or reagent used in this method has not been precisely determined; however, each chemical compound should be

treated as a potential health hazard. Exposure to these compounds should be reduced to the lowest possible level.

5.1.1 The 2,3,7,8-TCDD isomer has been found to be acnegenic, carcinogenic, and teratogenic in laboratory animal studies. It is soluble in water to approximately 200 ppt and in organic solvents to 0.14%. On the basis of the available toxicological and physical properties of 2,3,7,8-TCDD, all of the CDDs/CDFs should be handled only by highly trained personnel thoroughly familiar with handling and cautionary procedures and the associated risks.

5.1.2 It is recommended that the laboratory purchase dilute standard solutions of the analytes in this method. However, if primary solutions are prepared, they shall be prepared in a hood, and a NIOSH/MESA approved toxic gas respirator shall be worn when high concentrations are handled.

5.2 The laboratory is responsible for maintaining a current awareness file of OSHA regulations regarding the safe handling of the chemicals specified in this method. A reference file of material safety data sheets (MSDSs) should also be made available to all personnel involved in these analyses. It is also suggested that the laboratory perform personal hygiene monitoring of each analyst who uses this method and that the results of this monitoring be made available to the analyst. Additional information on laboratory safety can be found in References 10–13. The references and bibliography at the end of Reference 13 are particularly comprehensive in dealing with the general subject of laboratory safety.

5.3 The CDDs/CDFs and samples suspected to contain these compounds are handled using essentially the same techniques employed in handling radioactive or infectious materials. Well-ventilated, controlled access laboratories are required. Assistance in evaluating the health hazards of particular laboratory conditions may be obtained from certain consulting laboratories and from State Departments of Health or Labor, many of which have an industrial health service. The CDDs/CDFs are extremely toxic to laboratory animals. Each laboratory must develop a strict safety program for handling these compounds. The practices in References 2 and 14 are highly recommended.

5.3.1 Facility—When finely divided samples (dusts, soils, dry chemicals) are handled, all operations (including removal of samples from sample containers, weighing, transferring, and mixing) should be performed in a glove box demonstrated to be leak tight or in a fume hood demonstrated to have adequate air flow. Gross losses to the laboratory ventilation system must not be allowed. Handling of the dilute solutions normally used in analytical and animal work presents no inhalation hazards except in the case of an accident.

5.3.2 Protective equipment—Disposable plastic gloves, apron or lab coat, safety glasses or mask, and a glove box or fume hood adequate for radioactive work should be used. During analytical operations that may give rise to aerosols or dusts, personnel should wear respirators equipped with activated carbon filters. Eye protection equipment (preferably full face shields) must be worn while working with exposed samples or pure analytical standards. Latex gloves are commonly used to reduce exposure of the hands. When handling samples suspected or known to contain high concentrations of the CDDs/CDFs, an additional set of gloves can also be worn beneath the latex gloves.

5.3.3 Training—Workers must be trained in the proper method of removing contaminated gloves and clothing without contacting the exterior surfaces.

5.3.4 Personal hygiene—Hands and forearms should be washed thoroughly after each manipulation and before breaks (coffee, lunch, and shift).

5.3.5 Confinement—Isolated work areas posted with signs, segregated glassware and tools, and plastic absorbent paper on bench tops will aid in confining contamination.

5.3.6 Effluent vapors—The effluents of sample splitters from the gas chromatograph (GC) and from roughing pumps on the mass spectrometer (MS) should pass through either a column of activated charcoal or be bubbled through a trap containing oil or high-boiling alcohols to condense CDD/CDF vapors.

5.3.7 Waste Handling—Good technique includes minimizing contaminated waste. Plastic bag liners should be used in waste cans. Janitors and other personnel must be trained in the safe handling of waste.

5.3.8 Decontamination

5.3.8.1 Decontamination of personnel—Use any mild soap with plenty of scrubbing action.

5.3.8.2 Glassware, tools, and surfaces—Chlorothene NU Solvent is the least toxic solvent shown to be effective. Satisfactory cleaning may be accomplished by rinsing with Chlorothene, then washing with any detergent and water. If glassware is first rinsed with solvent, then the dish water may be disposed of in the sewer. Given the cost of disposal, it is prudent to minimize solvent wastes.

5.3.9 Laundry—Clothing known to be contaminated should be collected in plastic bags. Persons who convey the bags and launder the clothing should be advised of the hazard and trained in proper handling. The clothing may be put into a washer without contact if the launderer knows of the potential problem. The washer should be run through a cycle before being used again for other clothing.

5.3.10 Wipe tests—A useful method of determining cleanliness of work surfaces and

tools is to wipe the surface with a piece of filter paper. Extraction and analysis by GC with an electron capture detector (ECD) can achieve a limit of detection of 0.1 µg per wipe; analysis using this method can achieve an even lower detection limit. Less than 0.1 µg per wipe indicates acceptable cleanliness; anything higher warrants further cleaning. More than 10 µg on a wipe constitutes an acute hazard and requires prompt cleaning before further use of the equipment or work space, and indicates that unacceptable work practices have been employed.

5.3.11 Table or wrist-action shaker—The use of a table or wrist-action shaker for extraction of tissues presents the possibility of breakage of the extraction bottle and spillage of acid and flammable organic solvent. A secondary containment system around the shaker is suggested to prevent the spread of acid and solvents in the event of such a breakage. The speed and intensity of shaking action should also be adjusted to minimize the possibility of breakage.

6.0 Apparatus and Materials

NOTE: Brand names, suppliers, and part numbers are for illustration purposes only and no endorsement is implied. Equivalent performance may be achieved using apparatus and materials other than those specified here. Meeting the performance requirements of this method is the responsibility of the laboratory.

6.1 Sampling Equipment for Discrete or Composite Sampling

6.1.1 Sample bottles and caps

6.1.1.1 Liquid samples (waters, sludges and similar materials containing 5% solids or less)—Sample bottle, amber glass, 1.1 L minimum, with screw cap.

6.1.1.2 Solid samples (soils, sediments, sludges, paper pulps, filter cake, compost, and similar materials that contain more than 5% solids)—Sample bottle, wide mouth, amber glass, 500 mL minimum.

6.1.1.3 If amber bottles are not available, samples shall be protected from light.

6.1.1.4 Bottle caps—Threaded to fit sample bottles. Caps shall be lined with fluoropolymer.

6.1.1.5 Cleaning

6.1.1.5.1 Bottles are detergent water washed, then solvent rinsed before use.

6.1.1.5.2 Liners are detergent water washed, rinsed with reagent water (Section 7.6.1) followed by solvent, and baked at approximately 200 °C for a minimum of 1 hour prior to use.

6.1.2 Compositing equipment—Automatic or manual compositing system incorporating glass containers cleaned per bottle cleaning procedure above. Only glass or fluoropolymer tubing shall be used. If the sampler uses a peristaltic pump, a minimum length of compressible silicone rubber tubing may be used in the pump only. Before use, the tubing shall be thoroughly rinsed with methanol, followed by repeated rinsing with reagent water to minimize sample contamination. An integrating flow meter is used to collect proportional composite samples.

6.2 Equipment for Glassware Cleaning—Laboratory sink with overhead fume hood.

6.3 Equipment for Sample Preparation

6.3.1 Laboratory fume hood of sufficient size to contain the sample preparation equipment listed below.

6.3.2 Glove box (optional).

6.3.3 Tissue homogenizer—VirTis Model 45 Macro homogenizer (American Scientific Products H–3515, or equivalent) with stainless steel Macro-shaft and Turbo-shear blade.

6.3.4 Meat grinder—Hobart, or equivalent, with 3–5 mm holes in inner plate.

6.3.5 Equipment for determining percent moisture

6.3.5.1 Oven—Capable of maintaining a temperature of 110 ±5 °C.

6.3.5.2 Dessicator.

6.3.6 Balances

6.3.6.1 Analytical—Capable of weighing 0.1 mg.

6.3.6.2 Top loading—Capable of weighing 10 mg.

6.4 Extraction Apparatus

6.4.1 Water samples

6.4.1.1 pH meter, with combination glass electrode.

6.4.1.2 pH paper, wide range (Hydrion Papers, or equivalent).

6.4.1.3 Graduated cylinder, 1 L capacity.

6.4.1.4 Liquid/liquid extraction—Separatory funnels, 250 mL, 500 mL, and 2000 mL, with fluoropolymer stopcocks.

6.4.1.5 Solid-phase extraction

6.4.1.5.1 One liter filtration apparatus, including glass funnel, glass frit support, clamp, adapter, stopper, filtration flask, and vacuum tubing (Figure 4). For wastewater samples, the apparatus should accept 90 or 144 mm disks. For drinking water or other samples containing low solids, smaller disks may be used.

6.4.1.5.2 Vacuum source capable of maintaining 25 in. Hg, equipped with shutoff valve and vacuum gauge.

6.4.1.5.3 Glass-fiber filter—Whatman GMF 150 (or equivalent), 1 micron pore size, to fit filtration apparatus in Section 6.4.1.5.1.

6.4.1.5.4 Solid-phase extraction disk containing octadecyl (C_{18}) bonded silica uniformly enmeshed in an inert matrix—Fisher Scientific 14–378F (or equivalent), to fit filtration apparatus in Section 6.4.1.5.1.

6.4.2 Soxhlet/Dean-Stark (SDS) extractor (Figure 5)—For filters and solid/sludge samples.

6.4.2.1 Soxhlet—50 mm ID, 200 mL capacity with 500 mL flask (Cal-Glass LG–6900, or equivalent, except substitute 500 mL round-bottom flask for 300 mL flat-bottom flask).

6.4.2.2 Thimble—43 × 123 to fit Soxhlet (Cal-Glass LG–6901–122, or equivalent).

6.4.2.3 Moisture trap—Dean Stark or Barret with fluoropolymer stopcock, to fit Soxhlet.

6.4.2.4 Heating mantle—Hemispherical, to fit 500 mL round-bottom flask (Cal-Glass LG–8801–112, or equivalent).

6.4.2.5 Variable transformer—Powerstat (or equivalent), 110 volt, 10 amp.

6.4.3 Apparatus for extraction of tissue.

6.4.3.1 Bottle for extraction (if digestion/extraction using HCl is used)'' 500–600 mL wide-mouth clear glass, with fluoropolymer-lined cap.

6.4.3.2 Bottle for back-extraction—100–200 mL narrow-mouth clear glass with fluoropolymer-lined cap.

6.4.3.3 Mechanical shaker—Wrist-action or platform-type rotary shaker that produces vigorous agitation (Sybron Thermolyne Model LE ''Big Bill'' rotator/shaker, or equivalent).

6.4.3.4 Rack attached to shaker table to permit agitation of four to nine samples simultaneously.

6.4.4 Beakers—400–500 mL.

6.4.5 Spatulas—Stainless steel.

6.5 Filtration Apparatus.

6.5.1 Pyrex glass wool—Solvent-extracted by SDS for three hours minimum.

NOTE: Baking glass wool may cause active sites that will irreversibly adsorb CDDs/CDFs.

6.5.2 Glass funnel—125–250 mL.

6.5.3 Glass-fiber filter paper—Whatman GF/D (or equivalent), to fit glass funnel in Section 6.5.2.

6.5.4 Drying column—15–20 mm ID Pyrex chromatographic column equipped with coarse-glass frit or glass-wool plug.

6.5.5 Buchner funnel—15 cm.

6.5.6 Glass-fiber filter paper—to fit Buchner funnel in Section 6.5.5.

6.5.7 Filtration flasks—1.5–2.0 L, with side arm.

6.5.8 Pressure filtration apparatus—Millipore YT30 142 HW, or equivalent.

6.6 Centrifuge Apparatus.

6.6.1 Centrifuge—Capable of rotating 500 mL centrifuge bottles or 15 mL centrifuge tubes at 5,000 rpm minimum.

6.6.2 Centrifuge bottles—500 mL, with screw-caps, to fit centrifuge.

6.6.3 Centrifuge tubes—12–15 mL, with screw-caps, to fit centrifuge.

6.7 Cleanup Apparatus.

6.7.1 Automated gel permeation chromatograph (Analytical Biochemical Labs, Inc, Columbia, MO, Model GPC Autoprep 1002, or equivalent).

6.7.1.1 Column—600–700 mm long × 25 mm ID, packed with 70 g of SX–3 Bio-beads (Bio-Rad Laboratories, Richmond, CA, or equivalent).

6.7.1.2 Syringe—10 mL, with Luer fitting.

6.7.1.3 Syringe filter holder—stainless steel, and glass-fiber or fluoropolymer filters (Gelman 4310, or equivalent).

6.7.1.4 UV detectors—254 nm, preparative or semi-preparative flow cell (Isco, Inc., Type 6; Schmadzu, 5 mm path length; Beckman-Altex 152W, 8 μL micro-prep flow cell, 2 mm path; Pharmacia UV–1, 3 mm flow cell; LDC Milton-Roy UV–3, monitor #1203; or equivalent).

6.7.2 Reverse-phase high-performance liquid chromatograph.

6.7.2.1 Column oven and detector—Perkin-Elmer Model LC–65T (or equivalent) operated at 0.02 AUFS at 235 nm.

6.7.2.2 Injector—Rheodyne 7120 (or equivalent) with 50 μL sample loop.

6.7.2.3 Column—Two 6.2 mm × 250 mm Zorbax-ODS columns in series (DuPont Instruments Division, Wilmington, DE, or equivalent), operated at 50 °C with 2.0 mL/min methanol isocratic effluent.

6.7.2.4 Pump—Altex 110A (or equivalent).

6.7.3 Pipets.

6.7.3.1 Disposable, pasteur—150 mm long × 5-mm ID (Fisher Scientific 13–678–6A, or equivalent).

6.7.3.2 Disposable, serological—10 mL (6 mm ID).

6.7.4 Glass chromatographic columns.

6.7.4.1 150 mm long × 8-mm ID, (Kontes K–420155, or equivalent) with coarse-glass frit or glass-wool plug and 250 mL reservoir.

6.7.4.2 200 mm long × 15 mm ID, with coarse-glass frit or glass-wool plug and 250 mL reservoir.

6.7.4.3 300 mm long × 25 mm ID, with 300 mL reservoir and glass or fluoropolymer stopcock.

6.7.5 Stirring apparatus for batch silica cleanup of tissue extracts.

6.7.5.1 Mechanical stirrer—Corning Model 320, or equivalent.

6.7.5.2 Bottle—500–600 mL wide-mouth clear glass.

6.7.6 Oven—For baking and storage of adsorbents, capable of maintaining a constant temperature (±5 °C) in the range of 105–250 °C.

6.8 Concentration Apparatus.

6.8.1 Rotary evaporator—Buchi/Brinkman-American Scientific No. E5045–10 or equivalent, equipped with a variable temperature water bath.

6.8.1.1 Vacuum source for rotary evaporator equipped with shutoff valve at the evaporator and vacuum gauge.

6.8.1.2 A recirculating water pump and chiller are recommended, as use of tap water for cooling the evaporator wastes large volumes of water and can lead to inconsistent performance as water temperatures and pressures vary.

6.8.1.3 Round-bottom flask—100 mL and 500 mL or larger, with ground-glass fitting compatible with the rotary evaporator.

6.8.2 Kuderna-Danish (K-D) Concentrator.

6.8.2.1 Concentrator tube—10 mL, graduated (Kontes K–570050–1025, or equivalent) with calibration verified. Ground-glass stopper (size 19/22 joint) is used to prevent evaporation of extracts.

6.8.2.2 Evaporation flask—500 mL (Kontes K–570001–0500, or equivalent), attached to concentrator tube with springs (Kontes K–662750–0012 or equivalent).

6.8.2.3 Snyder column—Three-ball macro (Kontes K–503000–0232, or equivalent).

6.8.2.4 Boiling chips.

6.8.2.4.1 Glass or silicon carbide—Approximately 10/40 mesh, extracted with methylene chloride and baked at 450 °C for one hour minimum.

6.8.2.4.2 Fluoropolymer (optional)—Extracted with methylene chloride.

6.8.2.5 Water bath—Heated, with concentric ring cover, capable of maintaining a temperature within ±2 °C, installed in a fume hood.

6.8.3 Nitrogen blowdown apparatus—Equipped with water bath controlled in the range of 30–60 °C (N-Evap, Organomation Associates, Inc., South Berlin, MA, or equivalent), installed in a fume hood.

6.8.4 Sample vials.

6.8.4.1 Amber glass—2–5 mL with fluoropolymer-lined screw-cap.

6.8.4.2 Glass—0.3 mL, conical, with fluoropolymer-lined screw or crimp cap.

6.9 Gas Chromatograph—Shall have splitless or on-column injection port for capillary column, temperature program with isothermal hold, and shall meet all of the performance specifications in Section 10.

6.9.1 GC column for CDDs/CDFs and for isomer specificity for 2,3,7,8-TCDD—60 ±5 m long × 0.32 ±0.02 mm ID; 0.25 µm 5% phenyl, 94% methyl, 1% vinyl silicone bonded-phase fused-silica capillary column (J&W DB–5, or equivalent).

6.9.2 GC column for isomer specificity for 2,3,7,8-TCDF—30 ±5 m long × 0.32 ±0.02 mm ID; 0.25 µm bonded-phase fused-silica capillary column (J&W DB–225, or equivalent).

6.10 Mass Spectrometer—28–40 eV electron impact ionization, shall be capable of repetitively selectively monitoring 12 exact m/z's minimum at high resolution (≥10,000) during a period of approximately one second, and shall meet all of the performance specifications in Section 10.

6.11 GC/MS Interface—The mass spectrometer (MS) shall be interfaced to the GC such that the end of the capillary column terminates within 1 cm of the ion source but does not intercept the electron or ion beams.

6.12 Data System—Capable of collecting, recording, and storing MS data.

7.0 Reagents and Standards

7.1 pH Adjustment and Back-Extraction.

7.1.1 Potassium hydroxide—Dissolve 20 g reagent grade KOH in 100 mL reagent water.

7.1.2 Sulfuric acid—Reagent grade (specific gravity 1.84).

7.1.3 Hydrochloric acid—Reagent grade, 6N.

7.1.4 Sodium chloride—Reagent grade, prepare at 5% (w/v) solution in reagent water.

7.2 Solution Drying and Evaporation.

7.2.1 Solution drying—Sodium sulfate, reagent grade, granular, anhydrous (Baker 3375, or equivalent), rinsed with methylene chloride (20 mL/g), baked at 400 °C for one hour minimum, cooled in a dessicator, and stored in a pre-cleaned glass bottle with screw-cap that prevents moisture from entering. If, after heating, the sodium sulfate develops a noticeable grayish cast (due to the presence of carbon in the crystal matrix), that batch of reagent is not suitable for use and should be discarded. Extraction with methylene chloride (as opposed to simple rinsing) and baking at a lower temperature may produce sodium sulfate that is suitable for use.

7.2.2 Tissue drying—Sodium sulfate, reagent grade, powdered, treated and stored as above.

7.2.3 Prepurified nitrogen.

7.3 Extraction.

7.3.1 Solvents—Acetone, toluene, cyclohexane, hexane, methanol, methylene chloride, and nonane; distilled in glass, pesticide quality, lot-certified to be free of interferences.

7.3.2 White quartz sand, 60/70 mesh—For Soxhlet/Dean-Stark extraction (Aldrich Chemical, Cat. No. 27–437–9, or equivalent). Bake at 450 °C for four hours minimum.

7.4 GPC Calibration Solution—Prepare a solution containing 300 mg/mL corn oil, 15 mg/mL bis(2-ethylhexyl) phthalate, 1.4 mg/mL pentachlorophenol, 0.1 mg/mL perylene, and 0.5 mg/mL sulfur.

7.5 Adsorbents for Sample Cleanup.

7.5.1 Silica gel.

7.5.1.1 Activated silica gel—100–200 mesh, Supelco 1–3651 (or equivalent), rinsed with methylene chloride, baked at 180 °C for a minimum of one hour, cooled in a dessicator, and stored in a precleaned glass bottle with screw-cap that prevents moisture from entering.

7.5.1.2 Acid silica gel (30% w/w)—Thoroughly mix 44.0 g of concentrated sulfuric acid with 100.0 g of activated silica gel in a clean container. Break up aggregates with a stirring rod until a uniform mixture is obtained. Store in a bottle with a fluoropolymer-lined screw-cap.

7.5.1.3 Basic silica gel—Thoroughly mix 30 g of 1N sodium hydroxide with 100 g of activated silica gel in a clean container. Break up aggregates with a stirring rod until a uniform mixture is obtained. Store in a bottle with a fluoropolymer-lined screw-cap.

7.5.1.4 Potassium silicate.

7.5.1.4.1 Dissolve 56 g of high purity potassium hydroxide (Aldrich, or equivalent) in 300 mL of methanol in a 750–1000 mL flat-bottom flask.

7.5.1.4.2 Add 100 g of silica gel and a stirring bar, and stir on a hot plate at 60–70 °C for one to two hours.

7.5.1.4.3 Decant the liquid and rinse the potassium silicate twice with 100 mL portions of methanol, followed by a single rinse with 100 mL of methylene chloride.

7.5.1.4.4 Spread the potassium silicate on solvent-rinsed aluminum foil and dry for two to four hours in a hood.

7.5.1.4.5 Activate overnight at 200–250 °C.

7.5.2 Alumina—Either one of two types of alumina, acid or basic, may be used in the cleanup of sample extracts, provided that the laboratory can meet the performance specifications for the recovery of labeled compounds described in Section 9.3. The same type of alumina must be used for all samples, including those used to demonstrate initial precision and recovery (Section 9.2) and ongoing precision and recovery (Section 15.5).

7.5.2.1 Acid alumina—Supelco 19996–6C (or equivalent). Activate by heating to 130 °C for a minimum of 12 hours.

7.5.2.2 Basic alumina—Supelco 19944–6C (or equivalent). Activate by heating to 600 °C for a minimum of 24 hours. Alternatively, activate by heating in a tube furnace at 650–700 °C under an air flow rate of approximately 400 cc/minute. Do not heat over 700 °C, as this can lead to reduced capacity for retaining the analytes. Store at 130 °C in a covered flask. Use within five days of baking.

7.5.3 Carbon.

7.5.3.1 Carbopak C—(Supelco 1–0258, or equivalent).

7.5.3.2 Celite 545—(Supelco 2–0199, or equivalent).

7.5.3.3 Thoroughly mix 9.0 g Carbopak C and 41.0 g Celite 545 to produce an 18% w/w mixture. Activate the mixture at 130 °C for a minimum of six hours. Store in a dessicator.

7.5.4 Anthropogenic isolation column—Pack the column in Section 6.7.4.3 from bottom to top with the following:

7.5.4.1 2 g silica gel (Section 7.5.1.1).

7.5.4.2 2 g potassium silicate (Section 7.5.1.4).

7.5.4.3 2 g granular anhydrous sodium sulfate (Section 7.2.1).

7.5.4.4 10 g acid silica gel (Section 7.5.1.2).

7.5.4.5 2 g granular anhydrous sodium sulfate.

7.5.5 Florisil column.

7.5.5.1 Florisil—60–100 mesh, Floridin Corp (or equivalent). Soxhlet extract in 500 g portions for 24 hours.

7.5.5.2 Insert a glass wool plug into the tapered end of a graduated serological pipet (Section 6.7.3.2). Pack with 1.5 g (approx 2 mL) of Florisil topped with approx 1 mL of sodium sulfate (Section 7.2.1) and a glass wool plug.

7.5.5.3 Activate in an oven at 130–150 °C for a minimum of 24 hours and cool for 30 minutes. Use within 90 minutes of cooling.

7.6 Reference Matrices—Matrices in which the CDDs/CDFs and interfering compounds are not detected by this method.

7.6.1 Reagent water—Bottled water purchased locally, or prepared by passage through activated carbon.

7.6.2 High-solids reference matrix—Playground sand or similar material. Prepared by extraction with methylene chloride and/or baking at 450 °C for a minimum of four hours.

7.6.3 Paper reference matrix—Glass-fiber filter, Gelman Type A, or equivalent. Cut paper to simulate the surface area of the paper sample being tested.

7.6.4 Tissue reference matrix—Corn or other vegetable oil. May be prepared by extraction with methylene chloride.

7.6.5 Other matrices—This method may be verified on any reference matrix by performing the tests given in Section 9.2. Ideally, the matrix should be free of the CDDs/CDFs, but in no case shall the background level of the CDDs/CDFs in the reference matrix exceed three times the minimum levels in Table 2. If low background levels of the CDDs/CDFs are present in the reference matrix, the spike level of the analytes used in Section 9.2 should be increased to provide a spike-to-background ratio in the range of 1:1 to 5:1 (Reference 15).

7.7 Standard Solutions—Purchased as solutions or mixtures with certification to their purity, concentration, and authenticity, or prepared from materials of known purity and composition. If the chemical purity is 98% or greater, the weight may be used without correction to compute the concentration of the standard. When not being used, standards are stored in the dark at room temperature in screw-capped vials with fluoropolymer-lined caps. A mark is placed on the vial at the level of the solution so that solvent loss by evaporation can be detected. If solvent loss has occurred, the solution should be replaced.

7.8 Stock Solutions.

7.8.1 Preparation—Prepare in nonane per the steps below or purchase as dilute solutions (Cambridge Isotope Laboratories (CIL), Woburn, MA, or equivalent). Observe the safety precautions in Section 5, and the recommendation in Section 5.1.2.

7.8.2 Dissolve an appropriate amount of assayed reference material in solvent. For example, weigh 1–2 mg of 2,3,7,8-TCDD to three significant figures in a 10 mL ground-glass-stoppered volumetric flask and fill to the mark with nonane. After the TCDD is completely dissolved, transfer the solution to a clean 15 mL vial with fluoropolymer-lined cap.

7.8.3 Stock standard solutions should be checked for signs of degradation prior to the

preparation of calibration or performance test standards. Reference standards that can be used to determine the accuracy of calibration standards are available from CIL and may be available from other vendors.

7.9 PAR Stock Solution

7.9.1 All CDDs/CDFs—Using the solutions in Section 7.8, prepare the PAR stock solution to contain the CDDs/CDFs at the concentrations shown in Table 3. When diluted, the solution will become the PAR (Section 7.14).

7.9.2 If only 2,3,7,8-TCDD and 2,3,7,8-TCDF are to be determined, prepare the PAR stock solution to contain these compounds only.

7.10 Labeled-Compound Spiking Solution.

7.10.1 All CDDs/CDFs—From stock solutions, or from purchased mixtures, prepare this solution to contain the labeled compounds in nonane at the concentrations shown in Table 3. This solution is diluted with acetone prior to use (Section 7.10.3).

7.10.2 If only 2,3,7,8-TCDD and 2,3,7,8-TCDF are to be determined, prepare the labeled-compound solution to contain these compounds only. This solution is diluted with acetone prior to use (Section 7.10.3).

7.10.3 Dilute a sufficient volume of the labeled compound solution (Section 7.10.1 or 7.10.2) by a factor of 50 with acetone to prepare a diluted spiking solution. Each sample requires 1.0 mL of the diluted solution, but no more solution should be prepared than can be used in one day.

7.11 Cleanup Standard—Prepare $^{37}Cl^{4}$-2,3,7,8-TCDD in nonane at the concentration shown in Table 3. The cleanup standard is added to all extracts prior to cleanup to measure the efficiency of the cleanup process.

7.12 Internal Standard(s).

7.12.1 All CDDs/CDFs—Prepare the internal standard solution to contain $^{13}C^{12}$-1,2,3,4-TCDD and $^{13}C^{2}$-1,2,3,7,8,9-HxCDD in nonane at the concentration shown in Table 3.

7.12.2 If only 2,3,7,8-TCDD and 2,3,7,8-TCDF are to be determined, prepare the internal standard solution to contain $^{13}C^{12}$-1,2,3,4-TCDD only.

7.13 Calibration Standards (CS1 through CS5)—Combine the solutions in Sections 7.9 through 7.12 to produce the five calibration solutions shown in Table 4 in nonane. These solutions permit the relative response (labeled to native) and response factor to be measured as a function of concentration. The CS3 standard is used for calibration verification (VER). If only 2,3,7,8-TCDD and 2,3,7,8-TCDF are to be determined, combine the solutions appropriate to these compounds.

7.14 Precision and Recovery (PAR) Standard—Used for determination of initial (Section 9.2) and ongoing (Section 15.5) precision and recovery. Dilute 10 µL of the precision and recovery standard (Section 7.9.1 or 7.9.2) to 2.0 mL with acetone for each sample matrix for each sample batch. One mL each are required for the blank and OPR with each matrix in each batch.

7.15 GC Retention Time Window Defining Solution and Isomer Specificity Test Standard—Used to define the beginning and ending retention times for the dioxin and furan isomers and to demonstrate isomer specificity of the GC columns employed for determination of 2,3,7,8-TCDD and 2,3,7,8-TCDF. The standard must contain the compounds listed in Table 5 (CIL EDF—4006, or equivalent), at a minimum. It is not necessary to monitor the window-defining compounds if only 2,3,7,8-TCDD and 2,3,7,8-TCDF are to be determined. In this case, an isomer-specificity test standard containing the most closely eluted isomers listed in Table 5 (CIL EDF-4033, or equivalent) may be used.

7.16 QC Check Sample—A QC Check Sample should be obtained from a source independent of the calibration standards. Ideally, this check sample would be a certified reference material containing the CDDs/CDFs in known concentrations in a sample matrix similar to the matrix under test.

7.17 Stability of Solutions—Standard solutions used for quantitative purposes (Sections 7.9 through 7.15) should be analyzed periodically, and should be assayed against reference standards (Section 7.8.3) before further use.

8.0 Sample Collection, Preservation, Storage, and Holding Times

8.1 Collect samples in amber glass containers following conventional sampling practices (Reference 16). Aqueous samples that flow freely are collected in refrigerated bottles using automatic sampling equipment. Solid samples are collected as grab samples using wide-mouth jars.

8.2 Maintain aqueous samples in the dark at 0–4 °C from the time of collection until receipt at the laboratory. If residual chlorine is present in aqueous samples, add 80 mg sodium thiosulfate per liter of water. EPA Methods 330.4 and 330.5 may be used to measure residual chlorine (Reference 17). If sample pH is greater than 9, adjust to pH 7–9 with sulfuric acid.

Maintain solid, semi-solid, oily, and mixed-phase samples in the dark at <4 °C from the time of collection until receipt at the laboratory.

Store aqueous samples in the dark at 0–4 °C. Store solid, semi-solid, oily, mixed-phase, and tissue samples in the dark at < −10 °C.

8.3 Fish and Tissue Samples.

8.3.1 Fish may be cleaned, filleted, or processed in other ways in the field, such that the laboratory may expect to receive whole fish, fish fillets, or other tissues for analysis.

8.3.2 Fish collected in the field should be wrapped in aluminum foil, and must be maintained at a temperature less than 4 °C

from the time of collection until receipt at the laboratory.

8.3.3 Samples must be frozen upon receipt at the laboratory and maintained in the dark at <−10 °C until prepared. Maintain unused sample in the dark at <−10 °C.

8.4 Holding Times.

8.4.1 There are no demonstrated maximum holding times associated with CDDs/CDFs in aqueous, solid, semi-solid, tissues, or other sample matrices. If stored in the dark at 0–4 °C and preserved as given above (if required), aqueous samples may be stored for up to one year. Similarly, if stored in the dark at <−10 °C, solid, semi-solid, multiphase, and tissue samples may be stored for up to one year.

8.4.2 Store sample extracts in the dark at <−10 °C until analyzed. If stored in the dark at <−10 °C, sample extracts may be stored for up to one year.

9.0 Quality Assurance/Quality Control

9.1 Each laboratory that uses this method is required to operate a formal quality assurance program (Reference 18). The minimum requirements of this program consist of an initial demonstration of laboratory capability, analysis of samples spiked with labeled compounds to evaluate and document data quality, and analysis of standards and blanks as tests of continued performance. Laboratory performance is compared to established performance criteria to determine if the results of analyses meet the performance characteristics of the method.

If the method is to be applied to sample matrix other than water (e.g., soils, filter cake, compost, tissue) the most appropriate alternate matrix (Sections 7.6.2 through 7.6.5) is substituted for the reagent water matrix (Section 7.6.1) in all performance tests.

9.1.1 The analyst shall make an initial demonstration of the ability to generate acceptable accuracy and precision with this method. This ability is established as described in Section 9.2.

9.1.2 In recognition of advances that are occurring in analytical technology, and to allow the analyst to overcome sample matrix interferences, the analyst is permitted certain options to improve separations or lower the costs of measurements. These options include alternate extraction, concentration, cleanup procedures, and changes in columns and detectors. Alternate determinative techniques, such as the substitution of spectroscopic or immuno-assay techniques, and changes that degrade method performance, are not allowed. If an analytical technique other than the techniques specified in this method is used, that technique must have a specificity equal to or better than the specificity of the techniques in this method for the analytes of interest.

9.1.2.1 Each time a modification is made to this method, the analyst is required to repeat the procedure in Section 9.2. If the detection limit of the method will be affected by the change, the laboratory is required to demonstrate that the MDL (40 CFR part 136, appendix B) is lower than one-third the regulatory compliance level or one-third the ML in this method, whichever is higher. If calibration will be affected by the change, the analyst must recalibrate the instrument per Section 10.

9.1.2.2 The laboratory is required to maintain records of modifications made to this method. These records include the following, at a minimum:

9.1.2.2.1 The names, titles, addresses, and telephone numbers of the analyst(s) who performed the analyses and modification, and of the quality control officer who witnessed and will verify the analyses and modifications.

9.1.2.2.2 A listing of pollutant(s) measured, by name and CAS Registry number.

9.1.2.2.3 A narrative stating reason(s) for the modifications.

9.1.2.2.4 Results from all quality control (QC) tests comparing the modified method to this method, including:

(a) Calibration (Section 10.5 through 10.7).

(b) Calibration verification (Section 15.3).

(c) Initial precision and recovery (Section 9.2).

(d) Labeled compound recovery (Section 9.3).

(e) Analysis of blanks (Section 9.5).

(f) Accuracy assessment (Section 9.4).

9.1.2.2.5 Data that will allow an independent reviewer to validate each determination by tracing the instrument output (peak height, area, or other signal) to the final result. These data are to include:

(a) Sample numbers and other identifiers.

(b) Extraction dates.

(c) Analysis dates and times.

(d) Analysis sequence/run chronology.

(e) Sample weight or volume (Section 11).

(f) Extract volume prior to each cleanup step (Section 13).

(g) Extract volume after each cleanup step (Section 13).

(h) Final extract volume prior to injection (Section 14).

(i) Injection volume (Section 14.3).

(j) Dilution data, differentiating between dilution of a sample or extract (Section 17.5).

(k) Instrument and operating conditions.

(l) Column (dimensions, liquid phase, solid support, film thickness, etc).

(m) Operating conditions (temperatures, temperature program, flow rates).

(n) Detector (type, operating conditions, etc).

(o) Chromatograms, printer tapes, and other recordings of raw data.

(p) Quantitation reports, data system outputs, and other data to link the raw data to the results reported.

9.1.3 Analyses of method blanks are required to demonstrate freedom from contamination (Section 4.3). The procedures and criteria for analysis of a method blank are described in Sections 9.5 and 15.6.

9.1.4 The laboratory shall spike all samples with labeled compounds to monitor method performance. This test is described in Section 9.3. When results of these spikes indicate atypical method performance for samples, the samples are diluted to bring method performance within acceptable limits. Procedures for dilution are given in Section 17.5.

9.1.5 The laboratory shall, on an ongoing basis, demonstrate through calibration verification and the analysis of the ongoing precision and recovery aliquot that the analytical system is in control. These procedures are described in Sections 15.1 through 15.5.

9.1.6 The laboratory shall maintain records to define the quality of data that is generated. Development of accuracy statements is described in Section 9.4.

9.2 Initial Precision and Recovery (IPR)—To establish the ability to generate acceptable precision and recovery, the analyst shall perform the following operations.

9.2.1 For low solids (aqueous) samples, extract, concentrate, and analyze four 1 L aliquots of reagent water spiked with the diluted labeled compound spiking solution (Section 7.10.3) and the precision and recovery standard (Section 7.14) according to the procedures in Sections 11 through 18. For an alternative sample matrix, four aliquots of the alternative reference matrix (Section 7.6) are used. All sample processing steps that are to be used for processing samples, including preparation (Section 11), extraction (Section 12), and cleanup (Section 13), shall be included in this test.

9.2.2 Using results of the set of four analyses, compute the average concentration (X) of the extracts in ng/mL and the standard deviation of the concentration (s) in ng/mL for each compound, by isotope dilution for CDDs/CDFs with a labeled analog, and by internal standard for 1,2,3,7,8,9-HxCDD, OCDF, and the labeled compounds.

9.2.3 For each CDD/CDF and labeled compound, compare s and X with the corresponding limits for initial precision and recovery in Table 6. If only 2,3,7,8-TCDD and 2,3,7,8-TCDF are to be determined, compare s and X with the corresponding limits for initial precision and recovery in Table 6a. If s and X for all compounds meet the acceptance criteria, system performance is acceptable and analysis of blanks and samples may begin. If, however, any individual s exceeds the precision limit or any individual X falls outside the range for accuracy, system performance is unacceptable for that compound. Correct the problem and repeat the test (Section 9.2).

9.3 The laboratory shall spike all samples with the diluted labeled compound spiking solution (Section 7.10.3) to assess method performance on the sample matrix.

9.3.1 Analyze each sample according to the procedures in Sections 11 through 18.

9.3.2 Compute the percent recovery of the labeled compounds and the cleanup standard using the internal standard method (Section 17.2).

9.3.3 The recovery of each labeled compound must be within the limits in Table 7 when all 2,3,7,8-substituted CDDs/CDFs are determined, and within the limits in Table 7a when only 2,3,7,8-TCDD and 2,3,7,8-TCDF are determined. If the recovery of any compound falls outside of these limits, method performance is unacceptable for that compound in that sample. To overcome such difficulties, water samples are diluted and smaller amounts of soils, sludges, sediments, and other matrices are reanalyzed per Section 18.4.

9.4 Recovery of labeled compounds from samples should be assessed and records should be maintained.

9.4.1 After the analysis of five samples of a given matrix type (water, soil, sludge, pulp, etc.) for which the labeled compounds pass the tests in Section 9.3, compute the average percent recovery (R) and the standard deviation of the percent recovery (SR) for the labeled compounds only. Express the assessment as a percent recovery interval from $R-2S_R$ to $R = 2S_R$ for each matrix. For example, if R = 90% and S_R = 10% for five analyses of pulp, the recovery interval is expressed as 70–110%.

9.4.2 Update the accuracy assessment for each labeled compound in each matrix on a regular basis (e.g., after each 5–10 new measurements).

9.5 Method Blanks—Reference matrix method blanks are analyzed to demonstrate freedom from contamination (Section 4.3).

9.5.1 Prepare, extract, clean up, and concentrate a method blank with each sample batch (samples of the same matrix started through the extraction process on the same 12-hour shift, to a maximum of 20 samples). The matrix for the method blank shall be similar to sample matrix for the batch, e.g., a 1 L reagent water blank (Section 7.6.1), high-solids reference matrix blank (Section 7.6.2), paper matrix blank (Section 7.6.3); tissue blank (Section 7.6.4) or alternative reference matrix blank (Section 7.6.5). Analyze the blank immediately after analysis of the OPR (Section 15.5) to demonstrate freedom from contamination.

9.5.2 If any 2,3,7,8-substituted CDD/CDF (Table 1) is found in the blank at greater than the minimum level (Table 2) or one-third the regulatory compliance level, whichever is greater; or if any potentially interfering compound is found in the blank at the minimum level for each level of

chlorination given in Table 2 (assuming a response factor of 1 relative to the $^{13}C_{12}$-1,2,3,4-TCDD internal standard for compounds not listed in Table 1), analysis of samples is halted until the blank associated with the sample batch shows no evidence of contamination at this level. All samples must be associated with an uncontaminated method blank before the results for those samples may be reported for regulatory compliance purposes.

9.6 QC Check Sample—Analyze the QC Check Sample (Section 7.16) periodically to assure the accuracy of calibration standards and the overall reliability of the analytical process. It is suggested that the QC Check Sample be analyzed at least quarterly.

9.7 The specifications contained in this method can be met if the apparatus used is calibrated properly and then maintained in a calibrated state. The standards used for calibration (Section 10), calibration verification (Section 15.3), and for initial (Section 9.2) and ongoing (Section 15.5) precision and recovery should be identical, so that the most precise results will be obtained. A GC/MS instrument will provide the most reproducible results if dedicated to the settings and conditions required for the analyses of CDDs/CDFs by this method.

9.8 Depending on specific program requirements, field replicates may be collected to determine the precision of the sampling technique, and spiked samples may be required to determine the accuracy of the analysis when the internal standard method is used.

10.0 Calibration

10.1 Establish the operating conditions necessary to meet the minimum retention times for the internal standards in Section 10.2.4 and the relative retention times for the CDDs/CDFs in Table 2.

10.1.1 Suggested GC operating conditions:

Injector temperature: 270 °C
Interface temperature: 290 °C
Initial temperature: 200 °C
Initial time: Two minutes
Temperature program:
200–220 °C, at 5 °C/minute
220 °C for 16 minutes
220–235 °C, at 5 °C/minute
235 °C for seven minutes
235–330 °C, at 5 °C/minute

NOTE: All portions of the column that connect the GC to the ion source shall remain at or above the interface temperature specified above during analysis to preclude condensation of less volatile compounds.

Optimize GC conditions for compound separation and sensitivity. Once optimized, the same GC conditions must be used for the analysis of all standards, blanks, IPR and OPR aliquots, and samples.

10.1.2 Mass spectrometer (MS) resolution—Obtain a selected ion current profile (SICP) of each analyte in Table 3 at the two exact m/z's specified in Table 8 and at ≥10,000 resolving power by injecting an authentic standard of the CDDs/CDFs either singly or as part of a mixture in which there is no interference between closely eluted components.

10.1.2.1 The analysis time for CDDs/CDFs may exceed the long-term mass stability of the mass spectrometer. Because the instrument is operated in the high-resolution mode, mass drifts of a few ppm (e.g., 5 ppm in mass) can have serious adverse effects on instrument performance. Therefore, a mass-drift correction is mandatory and a lock-mass m/z from PFK is used for drift correction. The lock-mass m/z is dependent on the exact m/z's monitored within each descriptor, as shown in Table 8. The level of PFK metered into the HRMS during analyses should be adjusted so that the amplitude of the most intense selected lock-mass m/z signal (regardless of the descriptor number) does not exceed 10% of the full-scale deflection for a given set of detector parameters. Under those conditions, sensitivity changes that might occur during the analysis can be more effectively monitored.

NOTE: Excessive PFK (or any other reference substance) may cause noise problems and contamination of the ion source necessitating increased frequency of source cleaning.

10.1.2.2 If the HRMS has the capability to monitor resolution during the analysis, it is acceptable to terminate the analysis when the resolution falls below 10,000 to save reanalysis time.

10.1.2.3 Using a PFK molecular leak, tune the instrument to meet the minimum required resolving power of 10,000 (10% valley) at m/z 304.9824 (PFK) or any other reference signal close to m/z 304 (from TCDF). For each descriptor (Table 8), monitor and record the resolution and exact m/z's of three to five reference peaks covering the mass range of the descriptor. The resolution must be greater than or equal to 10,000, and the deviation between the exact m/z and the theoretical m/z (Table 8) for each exact m/z monitored must be less than 5 ppm.

10.2 Ion Abundance Ratios, Minimum Levels, Signal-to-Noise Ratios, and Absolute Retention Times—Choose an injection volume of either 1 µL or 2 µL, consistent with the capability of the HRGC/HRMS instrument. Inject a 1 µL or 2 µL aliquot of the CS1 calibration solution (Table 4) using the GC conditions from Section 10.1.1. If only 2,3,7,8-TCDD and 2,3,7,8-TCDF are to be determined, the operating conditions and specifications below apply to analysis of those compounds only.

10.2.1 Measure the SICP areas for each analyte, and compute the ion abundance ratios at the exact m/z's specified in Table 8. Compare the computed ratio to the theoretical ratio given in Table 9.

10.2.1.1 The exact m/z's to be monitored in each descriptor are shown in Table 8. Each group or descriptor shall be monitored in succession as a function of GC retention time to ensure that all CDDs/CDFs are detected. Additional m/z's may be monitored in each descriptor, and the m/z's may be divided among more than the five descriptors listed in Table 8, provided that the laboratory is able to monitor the m/z's of all the CDDs/CDFs that may elute from the GC in a given retention-time window. If only 2,3,7,8-TCDD and 2,3,7,8-TCDF are to be determined, the descriptors may be modified to include only the exact m/z's for the tetra-and penta-isomers, the diphenyl ethers, and the lock m/z's.

10.2.1.2 The mass spectrometer shall be operated in a mass-drift correction mode, using perfluorokerosene (PFK) to provide lock m/z's. The lock-mass for each group of m/z's is shown in Table 8. Each lock mass shall be monitored and shall not vary by more than ±20% throughout its respective retention time window. Variations of the lock mass by more than 20% indicate the presence of coeluting interferences that may significantly reduce the sensitivity of the mass spectrometer. Reinjection of another aliquot of the sample extract will not resolve the problem. Additional cleanup of the extract may be required to remove the interferences.

10.2.2 All CDDs/CDFs and labeled compounds in the CS1 standard shall be within the QC limits in Table 9 for their respective ion abundance ratios; otherwise, the mass spectrometer shall be adjusted and this test repeated until the m/z ratios fall within the limits specified. If the adjustment alters the resolution of the mass spectrometer, resolution shall be verified (Section 10.1.2) prior to repeat of the test.

10.2.3 Verify that the HRGC/HRMS instrument meets the minimum levels in Table 2. The peaks representing the CDDs/CDFs and labeled compounds in the CS1 calibration standard must have signal-to-noise ratios (S/N) greater than or equal to 10.0. Otherwise, the mass spectrometer shall be adjusted and this test repeated until the minimum levels in Table 2 are met.

10.2.4 The absolute retention time of $^{13}C_{12}$-1,2,3,4–TCDD (Section 7.12) shall exceed 25.0 minutes on the DB–5 column, and the retention time of $^{13}C_{12}$-1,2,3,4–TCDD shall exceed 15.0 minutes on the DB–225 column; otherwise, the GC temperature program shall be adjusted and this test repeated until the above-stated minimum retention time criteria are met.

2010.3 Retention-Time Windows—Analyze the window defining mixtures (Section 7.15) using the optimized temperature program in Section 10.1. Table 5 gives the elution order (first/last) of the window-defining compounds. If 2,3,7,8-TCDD and 2,3,7,8-TCDF only are to be analyzed, this test is not required.

10.4 Isomer Specificity.

10.4.1 Analyze the isomer specificity test standards (Section 7.15) using the procedure in Section 14 and the optimized conditions for sample analysis (Section 10.1.1).

10.4.2 Compute the percent valley between the GC peaks that elute most closely to the 2,3,7,8-TCDD and TCDF isomers, on their respective columns, per Figures 6 and 7.

10.4.3 Verify that the height of the valley between the most closely eluted isomers and the 2,3,7,8-substituted isomers is less than 25% (computed as 100 x/y in Figures 6 and 7). If the valley exceeds 25%, adjust the analytical conditions and repeat the test or replace the GC column and recalibrate (Sections 10.1.2 through 10.7).

10.5 Calibration by Isotope Dilution—Isotope dilution calibration is used for the 15 2,3,7,8-substituted CDDs/CDFs for which labeled compounds are added to samples prior to extraction. The reference compound for each CDD/CDF compound is shown in Table 2.

10.5.1 A calibration curve encompassing the concentration range is prepared for each compound to be determined. The relative response (RR) (labeled to native) vs. concentration in standard solutions is plotted or computed using a linear regression. Relative response is determined according to the procedures described below. Five calibration points are employed.

10.5.2 The response of each CDD/CDF relative to its labeled analog is determined using the area responses of both the primary and secondary exact m/z's specified in Table 8, for each calibration standard, as follows:

$$RR = \frac{(A1_n + A2_n)\,C_l}{(A1_l + A2_l)\,C_n}$$

where:

$A1_n$ and $A2_n$ = The areas of the primary and secondary m/z's for the CDD/CDF.

$A1_l$ and $A2_l$ = The areas of the primary and secondary m/z's for the labeled compound.

C_l = The concentration of the labeled compound in the calibration standard (Table 4).

C_n = The concentration of the native compound in the calibration standard (Table 4).

10.5.3 To calibrate the analytical system by isotope dilution, inject a volume of calibration standards CS1 through CS5 (Section 7.13 and Table 4) identical to the volume chosen in Section 10.2, using the procedure in Section 14 and the conditions in Section

10.1.1 and Table 2. Compute the relative response (RR) at each concentration.

10.5.4 Linearity—If the relative response for any compound is constant (less than 20% coefficient of variation) over the five-point calibration range, an averaged relative response may be used for that compound; otherwise, the complete calibration curve for that compound shall be used over the five-point calibration range.

10.6 Calibration by Internal Standard—The internal standard method is applied to determination of 1,2,3,7,8,9-HxCDD (Section 17.1.2), OCDF (Section 17.1.1), the non 2,3,7,8-substituted compounds, and to the determination of labeled compounds for intralaboratory statistics (Sections 9.4 and 15.5.4).

10.6.1 Response factors—Calibration requires the determination of response factors (RF) defined by the following equation:

$$RF = \frac{(A1_s + A2_s)\,C_{is}}{(A1_{is} + A2_{is})\,C_s}$$

where:

$A1_s$ and $A2_s$ = The areas of the primary and secondary m/z's for the CDD/CDF.

$A1_{is}$ and $A2_{is}$ = The areas of the primary and secondary m/z's for the internal standard.

C_{is} = The concentration of the internal standard (Table 4).

C_s = The concentration of the compound in the calibration standard (Table 4).

NOTE: There is only one m/z for $^{37}Cl_4$-2,3,7,8-TCDD. See Table 8.

10.6.2 To calibrate the analytical system by internal standard, inject 1.0 µL or 2.0 µL of calibration standards CS1 through CS5 (Section 7.13 and Table 4) using the procedure in Section 14 and the conditions in Section 10.1.1 and Table 2. Compute the response factor (RF) at each concentration.

10.6.3 Linearity—If the response factor (RF) for any compound is constant (less than 35% coefficient of variation) over the five-point calibration range, an averaged response factor may be used for that compound; otherwise, the complete calibration curve for that compound shall be used over the five-point range.

10.7 Combined Calibration—By using calibration solutions (Section 7.13 and Table 4) containing the CDDs/CDFs and labeled compounds and the internal standards, a single set of analyses can be used to produce calibration curves for the isotope dilution and internal standard methods. These curves are verified each shift (Section 15.3) by analyzing the calibration verification standard (VER, Table 4). Recalibration is required if any of the calibration verification criteria (Section 15.3) cannot be met.

10.8 Data Storage—MS data shall be collected, recorded, and stored.

10.8.1 Data acquisition—The signal at each exact m/z shall be collected repetitively throughout the monitoring period and stored on a mass storage device.

10.8.2 Response factors and multipoint calibrations—The data system shall be used to record and maintain lists of response factors (response ratios for isotope dilution) and multipoint calibration curves. Computations of relative standard deviation (coefficient of variation) shall be used to test calibration linearity. Statistics on initial performance (Section 9.2) and ongoing performance (Section 15.5) should be computed and maintained, either on the instrument data system, or on a separate computer system.

11.0 Sample Preparation

11.1 Sample preparation involves modifying the physical form of the sample so that the CDDs/CDFs can be extracted efficiently. In general, the samples must be in a liquid form or in the form of finely divided solids in order for efficient extraction to take place. Table 10 lists the phases and suggested quantities for extraction of various sample matrices.

For samples known or expected to contain high levels of the CDDs/CDFs, the smallest sample size representative of the entire sample should be used (see Section 17.5).

For all samples, the blank and IPR/OPR aliquots must be processed through the same steps as the sample to check for contamination and losses in the preparation processes.

11.1.1 For samples that contain particles, percent solids and particle size are determined using the procedures in Sections 11.2 and 11.3, respectively.

11.1.2 Aqueous samples—Because CDDs/CDFs may be bound to suspended particles, the preparation of aqueous samples is dependent on the solids content of the sample.

11.1.2.1 Aqueous samples visibly absent particles are prepared per Section 11.4 and extracted directly using the separatory funnel or SPE techniques in Sections 12.1 or 12.2, respectively.

11.1.2.2 Aqueous samples containing visible particles and containing one percent suspended solids or less are prepared using the procedure in Section 11.4. After preparation, the sample is extracted directly using the SPE technique in 12.2 or filtered per Section 11.4.3. After filtration, the particles and filter are extracted using the SDS procedure in Section 12.3 and the filtrate is extracted using the separatory funnel procedure in Section 12.1.

11.1.2.3 For aqueous samples containing greater than one percent solids, a sample aliquot sufficient to provide 10 g of dry solids is used, as described in Section 11.5.

11.1.3 Solid samples are prepared using the procedure described in Section 11.5 followed by extraction via the SDS procedure in Section 12.3.

11.1.4 Multiphase samples—The phase(s) containing the CDDs/CDFs is separated from the non-CDD/CDF phase using pressure filtration and centrifugation, as described in Section 11.6. The CDDs/CDFs will be in the organic phase in a multiphase sample in which an organic phase exists.

11.1.5 Procedures for grinding, homogenization, and blending of various sample phases are given in Section 11.7.

11.1.6 Tissue samples—Preparation procedures for fish and other tissues are given in Section 11.8.

11.2 Determination of Percent Suspended Solids.

NOTE: This aliquot is used for determining the solids content of the sample, not for determination of CDDs/CDFs.

11.2.1 Aqueous liquids and multi-phase samples consisting of mainly an aqueous phase.

11.2.1.1 Dessicate and weigh a GF/D filter (Section 6.5.3) to three significant figures.

11.2.1.2 Filter 10.0 ±0.02 mL of well-mixed sample through the filter.

11.2.1.3 Dry the filter a minimum of 12 hours at 110 ±5 °C and cool in a dessicator.

11.2.1.4 Calculate percent solids as follows:

$$\%\ \text{solids} = \frac{\text{weight of sample aliquot after drying (g)} - \text{weight of filter (g)}}{10\ \text{g}} \times 100$$

11.2.2 Non-aqueous liquids, solids, semi-solid samples, and multi-phase samples in which the main phase is not aqueous; but not tissues.

11.2.2.1 Weigh 5–10 g of sample to three significant figures in a tared beaker.

11.2.2.2 Dry a minimum of 12 hours at 110 ±5 °C, and cool in a dessicator.

11.2.2.3 Calculate percent solids as follows:

$$\%\ \text{solids} = \frac{\text{weight of sample aliquot after drying}}{\text{weight of sample aliquot before drying}} \times 100$$

11.3 Determination of Particle Size.

11.3.1 Spread the dried sample from Section 11.2.2.2 on a piece of filter paper or aluminum foil in a fume hood or glove box.

11.3.2 Estimate the size of the particles in the sample. If the size of the largest particles is greater than 1 mm, the particle size must be reduced to 1 mm or less prior to extraction using the procedures in Section 11.7.

11.4 Preparation of Aqueous Samples Containing 1% Suspended Solids or Less.

11.4.1 Aqueous samples visibly absent particles are prepared per the procedure below and extracted directly using the separatory funnel or SPE techniques in Sections 12.1 or 12.2, respectively. Aqueous samples containing visible particles and one percent suspended solids or less are prepared using the procedure below and extracted using either the SPE technique in Section 12.2 or further prepared using the filtration procedure in Section 11.4.3. The filtration procedure is followed by SDS extraction of the filter and particles (Section 12.3) and separatory funnel extraction of the filtrate (Section 12.1). The SPE procedure is followed by SDS extraction of the filter and disk.

11.4.2 Preparation of sample and QC aliquots.

11.4.2.1 Mark the original level of the sample on the sample bottle for reference. Weigh the sample plus bottle to ±1.

11.4.2.2 Spike 1.0 mL of the diluted labeled-compound spiking solution (Section 7.10.3) into the sample bottle. Cap the bottle and mix the sample by careful shaking. Allow the sample to equilibrate for one to two hours, with occasional shaking.

11.4.2.3 For each sample or sample batch (to a maximum of 20 samples) to be extracted during the same 12-hour shift, place two 1.0 L aliquots of reagent water in clean sample bottles or flasks.

11.4.2.4 Spike 1.0 mL of the diluted labeled-compound spiking solution (Section 7.10.3) into both reagent water aliquots. One of these aliquots will serve as the method blank.

11.4.2.5 Spike 1.0 mL of the PAR standard (Section 7.14) into the remaining reagent water aliquot. This aliquot will serve as the OPR (Section 15.5).

11.4.2.6 If SPE is to be used, add 5 mL of methanol to the sample, cap and shake the

sample to mix thoroughly, and proceed to Section 12.2 for extraction. If SPE is not to be used, and the sample is visibly absent particles, proceed to Section 12.1 for extraction. If SPE is not to be used and the sample contains visible particles, proceed to the following section for filtration of particles.

11.4.3 Filtration of particles.

11.4.3.1 Assemble a Buchner funnel (Section 6.5.5) on top of a clean filtration flask. Apply vacuum to the flask, and pour the entire contents of the sample bottle through a glass-fiber filter (Section 6.5.6) in the Buchner funnel, swirling the sample remaining in the bottle to suspend any particles.

11.4.3.2 Rinse the sample bottle twice with approximately 5 mL portions of reagent water to transfer any remaining particles onto the filter.

11.4.3.3 Rinse any particles off the sides of the Buchner funnel with small quantities of reagent water.

11.4.3.4 Weigh the empty sample bottle to ±1 g. Determine the weight of the sample by difference. Save the bottle for further use.

11.4.3.5 Extract the filtrate using the separatory funnel procedure in Section 12.1.

11.4.3.6 Extract the filter containing the particles using the SDS procedure in Section 12.3.

11.5 Preparation of Samples Containing Greater Than 1% Solids.

11.5.1 Weigh a well-mixed aliquot of each sample (of the same matrix type) sufficient to provide 10 g of dry solids (based on the solids determination in Section 11.2) into a clean beaker or glass jar.

11.5.2 Spike 1.0 mL of the diluted labeled compound spiking solution (Section 7.10.3) into the sample.

11.5.3 For each sample or sample batch (to a maximum of 20 samples) to be extracted during the same 12-hour shift, weigh two 10 g aliquots of the appropriate reference matrix (Section 7.6) into clean beakers or glass jars.

11.5.4 Spike 1.0 mL of the diluted labeled compound spiking solution (Section 7.10.3) into each reference matrix aliquot. One aliquot will serve as the method blank. Spike 1.0 mL of the PAR standard (Section 7.14) into the other reference matrix aliquot. This aliquot will serve as the OPR (Section 15.5).

11.5.5 Stir or tumble and equilibrate the aliquots for one to two hours.

11.5.6 Decant excess water. If necessary to remove water, filter the sample through a glass-fiber filter and discard the aqueous liquid.

11.5.7 If particles >1mm are present in the sample (as determined in Section 11.3.2), spread the sample on clean aluminum foil in a hood. After the sample is dry, grind to reduce the particle size (Section 11.7).

11.5.8 Extract the sample and QC aliquots using the SDS procedure in Section 12.3.

11.6 Multiphase Samples.

11.6.1 Using the percent solids determined in Section 11.2.1 or 11.2.2, determine the volume of sample that will provide 10 g of solids, up to 1 L of sample.

11.6.2 Pressure filter the amount of sample determined in Section 11.6.1 through Whatman GF/D glass-fiber filter paper (Section 6.5.3). Pressure filter the blank and OPR aliquots through GF/D papers also. If necessary to separate the phases and/or settle the solids, centrifuge these aliquots prior to filtration.

11.6.3 Discard any aqueous phase (if present). Remove any non-aqueous liquid present and reserve the maximum amount filtered from the sample (Section 11.6.1) or 10 g, whichever is less, for combination with the solid phase (Section 12.3.5).

11.6.4 If particles >1mm are present in the sample (as determined in Section 11.3.2) and the sample is capable of being dried, spread the sample and QC aliquots on clean aluminum foil in a hood. After the aliquots are dry or if the sample cannot be dried, reduce the particle size using the procedures in Section 11.7 and extract the reduced particles using the SDS procedure in Section 12.3. If particles >1mm are not present, extract the particles and filter in the sample and QC aliquots directly using the SDS procedure in Section 12.3.

11.7 Sample grinding, homogenization, or blending—Samples with particle sizes greater than 1 mm (as determined in Section 11.3.2) are subjected to grinding, homogenization, or blending. The method of reducing particle size to less than 1 mm is matrix-dependent. In general, hard particles can be reduced by grinding with a mortar and pestle. Softer particles can be reduced by grinding in a Wiley mill or meat grinder, by homogenization, or in a blender.

11.7.1 Each size-reducing preparation procedure on each matrix shall be verified by running the tests in Section 9.2 before the procedure is employed routinely.

11.7.2 The grinding, homogenization, or blending procedures shall be carried out in a glove box or fume hood to prevent particles from contaminating the work environment.

11.7.3 Grinding—Certain papers and pulps, slurries, and amorphous solids can be ground in a Wiley mill or heavy duty meat grinder. In some cases, reducing the temperature of the sample to freezing or to dry ice or liquid nitrogen temperatures can aid in the grinding process. Grind the sample aliquots from Section 11.5.7 or 11.6.4 in a clean grinder. Do not allow the sample temperature to exceed 50 °C. Grind the blank and reference matrix aliquots using a clean grinder.

11.7.4 Homogenization or blending—Particles that are not ground effectively, or particles greater than 1 mm in size after grinding, can often be reduced in size by high speed homogenization or blending. Homogenize and/or blend the particles or filter from

Section 11.5.7 or 11.6.4 for the sample, blank, and OPR aliquots.

11.7.5 Extract the aliquots using the SDS procedure in Section 12.3.

11.8 Fish and Other Tissues—Prior to processing tissue samples, the laboratory must determine the exact tissue to be analyzed. Common requests for analysis of fish tissue include whole fish—skin on, whole fish—skin removed, edible fish fillets (filleted in the field or by the laboratory), specific organs, and other portions. Once the appropriate tissue has been determined, the sample must be homogenized.

11.8.1 Homogenization.

11.8.1.1 Samples are homogenized while still frozen, where practical. If the laboratory must dissect the whole fish to obtain the appropriate tissue for analysis, the unused tissues may be rapidly refrozen and stored in a clean glass jar for subsequent use.

11.8.1.2 Each analysis requires 10 g of tissue (wet weight). Therefore, the laboratory should homogenize at least 20 g of tissue to allow for re-extraction of a second aliquot of the same homogenized sample, if re-analysis is required. When whole fish analysis is necessary, the entire fish is homogenized.

11.8.1.3 Homogenize the sample in a tissue homogenizer (Section 6.3.3) or grind in a meat grinder (Section 6.3.4). Cut tissue too large to feed into the grinder into smaller pieces. To assure homogeneity, grind three times.

11.8.1.4 Transfer approximately 10 g (wet weight) of homogenized tissue to a clean, tared, 400–500 mL beaker. For the alternate HCl digestion/extraction, transfer the tissue to a clean, tared 500–600 mL wide-mouth bottle. Record the weight to the nearest 10 mg.

11.8.1.5 Transfer the remaining homogenized tissue to a clean jar with a fluoropolymer-lined lid. Seal the jar and store the tissue at <-10 °C. Return any tissue that was not homogenized to its original container and store at <-10 °C.

11.8.2 QC aliquots.

11.8.2.1 Prepare a method blank by adding approximately 10 g of the oily liquid reference matrix (Section 7.6.4) to a 400–500 mL beaker. For the alternate HCl digestion/extraction, add the reference matrix to a 500–600 mL wide-mouth bottle. Record the weight to the nearest 10 mg.

11.8.2.2 Prepare a precision and recovery aliquot by adding approximately 10 g of the oily liquid reference matrix (Section 7.6.4) to a separate 400–500 mL beaker or wide-mouth bottle, depending on the extraction procedure to be used. Record the weight to the nearest 10 mg. If the initial precision and recovery test is to be performed, use four aliquots; if the ongoing precision and recovery test is to be performed, use a single aliquot.

11.8.3 Spiking

11.8.3.1 Spike 1.0 mL of the labeled compound spiking solution (Section 7.10.3) into the sample, blank, and OPR aliquot.

11.8.3.2 Spike 1.0 mL of the PAR standard (Section 7.14) into the OPR aliquot.

11.8.4 Extract the aliquots using the procedures in Section 12.4.

12.0 Extraction and Concentration

Extraction procedures include separatory funnel (Section 12.1) and solid phase (Section 12.2) for aqueous liquids; Soxhlet/Dean-Stark (Section 12.3) for solids, filters, and SPE disks; and Soxhlet extraction (Section 12.4.1) and HCl digestion (Section 12.4.2) for tissues. Acid/base back-extraction (Section 12.5) is used for initial cleanup of extracts.

Macro-concentration procedures include rotary evaporation (Section 12.6.1), heating mantle (Section 12.6.2), and Kuderna-Danish (K-D) evaporation (Section 12.6.3). Micro-concentration uses nitrogen blowdown (Section 12.7).

12.1 Separatory funnel extraction of filtrates and of aqueous samples visibly absent particles.

12.1.1 Pour the spiked sample (Section 11.4.2.2) or filtrate (Section 11.4.3.5) into a 2 L separatory funnel. Rinse the bottle or flask twice with 5 mL of reagent water and add these rinses to the separatory funnel.

12.1.2 Add 60 mL methylene chloride to the empty sample bottle (Section 12.1.1), seal, and shake 60 seconds to rinse the inner surface. Transfer the solvent to the separatory funnel, and extract the sample by shaking the funnel for two minutes with periodic venting. Allow the organic layer to separate from the aqueous phase for a minimum of 10 minutes. If an emulsion forms and is more than one-third the volume of the solvent layer, employ mechanical techniques to complete the phase separation (see note below). Drain the methylene chloride extract through a solvent-rinsed glass funnel approximately one-half full of granular anhydrous sodium sulfate (Section 7.2.1) supported on clean glass-fiber paper into a solvent-rinsed concentration device (Section 12.6).

NOTE: If an emulsion forms, the analyst must employ mechanical techniques to complete the phase separation. The optimum technique depends upon the sample, but may include stirring, filtration through glass wool, use of phase separation paper, centrifugation, use of an ultrasonic bath with ice, addition of NaCl, or other physical methods. Alternatively, solid-phase or other extraction techniques may be used to prevent emulsion formation. Any alternative technique is acceptable so long as the requirements in Section 9 are met.

Experience with aqueous samples high in dissolved organic materials (e.g., paper mill effluents) has shown that acidification of the

sample prior to extraction may reduce the formation of emulsions. Paper industry methods suggest that the addition of up to 400 mL of ethanol to a 1 L effluent sample may also reduce emulsion formation. However, studies by EPA suggest that the effect may be a result of sample dilution, and that the addition of reagent water may serve the same function. Mechanical techniques may still be necessary to complete the phase separation. If either acidification or addition of ethanol is utilized, the laboratory must perform the startup tests described in Section 9.2 using the same techniques.

12.1.3 Extract the water sample two more times with 60 mL portions of methylene chloride. Drain each portion through the sodium sulfate into the concentrator. After the third extraction, rinse the separatory funnel with at least 20 mL of methylene chloride, and drain this rinse through the sodium sulfate into the concentrator. Repeat this rinse at least twice. Set aside the funnel with sodium sulfate if the extract is to be combined with the extract from the particles.

12.1.4 Concentrate the extract using one of the macro-concentration procedures in Section 12.6.

12.1.4.1 If the extract is from a sample visibly absent particles (Section 11.1.2.1), adjust the final volume of the concentrated extract to approximately 10 mL with hexane, transfer to a 250 mL separatory funnel, and back-extract using the procedure in Section 12.5.

12.1.4.2 If the extract is from the aqueous filtrate (Section 11.4.3.5), set aside the concentration apparatus for addition of the SDS extract from the particles (Section 12.3.9.1.2).

12.2 SPE of Samples Containing Less Than 1% Solids (References 19–20).

12.2.1 Disk preparation.

12.2.1.1 Place an SPE disk on the base of the filter holder (Figure 4) and wet with toluene. While holding a GMF 150 filter above the SPE disk with tweezers, wet the filter with toluene and lay the filter on the SPE disk, making sure that air is not trapped between the filter and disk. Clamp the filter and SPE disk between the 1 L glass reservoir and the vacuum filtration flask.

12.2.1.2 Rinse the sides of the filtration flask with approx 15 mL of toluene using a squeeze bottle or syringe. Apply vacuum momentarily until a few drops appear at the drip tip. Release the vacuum and allow the filter/disk to soak for approx one minute. Apply vacuum and draw all of the toluene through the filter/disk. Repeat the wash step with approx 15 mL of acetone and allow the filter/disk to air dry.

12.2.1.3 Re-wet the filter/disk with approximately 15 mL of methanol, allowing the filter/disk to soak for approximately one minute. Pull the methanol through the filter/disk using the vacuum, but retain a layer of methanol approximately 1 mm thick on the filter. Do not allow the disk to go dry from this point until the end of the extraction.

12.2.1.4 Rinse the filter/disk with two 50-mL portions of reagent water by adding the water to the reservoir and pulling most through, leaving a layer of water on the surface of the filter.

12.2.2 Extraction.

12.2.2.1 Pour the spiked sample (Section 11.4.2.2), blank (Section 11.4.2.4), or IPR/OPR aliquot (Section 11.4.2.5) into the reservoir and turn on the vacuum to begin the extraction. Adjust the vacuum to complete the extraction in no less than 10 minutes. For samples containing a high concentration of particles (suspended solids), filtration times may be eight hours or longer.

12.2.2.2 Before all of the sample has been pulled through the filter/disk, rinse the sample bottle with approximately 50 mL of reagent water to remove any solids, and pour into the reservoir. Pull through the filter/disk. Use additional reagent water rinses until all visible solids are removed.

12.2.2.3 Before all of the sample and rinses have been pulled through the filter/disk, rinse the sides of the reservoir with small portions of reagent water.

12.2.2.4 Allow the filter/disk to dry, then remove the filter and disk and place in a glass Petri dish. Extract the filter and disk per Section 12.3.

12.3 SDS Extraction of Samples Containing Particles, and of Filters and/or Disks.

12.3.1 Charge a clean extraction thimble (Section 6.4.2.2) with 5.0 g of 100/200 mesh silica (Section 7.5.1.1) topped with 100 g of quartz sand (Section 7.3.2).

NOTE: Do not disturb the silica layer throughout the extraction process.

12.3.2 Place the thimble in a clean extractor. Place 30–40 mL of toluene in the receiver and 200–250 mL of toluene in the flask.

12.3.3 Pre-extract the glassware by heating the flask until the toluene is boiling. When properly adjusted, one to two drops of toluene will fall per second from the condenser tip into the receiver. Extract the apparatus for a minimum of three hours.

12.3.4 After pre-extraction, cool and disassemble the apparatus. Rinse the thimble with toluene and allow to air dry.

12.3.5 Load the wet sample, filter, and/or disk from Section 11.4.3.6, 11.5.8, 11.6.4, 11.7.3, 11.7.4, or 12.2.2.4 and any nonaqueous liquid from Section 11.6.3 into the thimble and manually mix into the sand layer with a clean metal spatula, carefully breaking up any large lumps of sample.

12.3.6 Reassemble the pre-extracted SDS apparatus, and add a fresh charge of toluene to the receiver and reflux flask. Apply power

to the heating mantle to begin refluxing. Adjust the reflux rate to match the rate of percolation through the sand and silica beds until water removal lessens the restriction to toluene flow. Frequently check the apparatus for foaming during the first two hours of extraction. If foaming occurs, reduce the reflux rate until foaming subsides.

12.3.7 Drain the water from the receiver at one to two hours and eight to nine hours, or sooner if the receiver fills with water. Reflux the sample for a total of 16–24 hours. Cool and disassemble the apparatus. Record the total volume of water collected.

12.3.8 Remove the distilling flask. Drain the water from the Dean-Stark receiver and add any toluene in the receiver to the extract in the flask.

12.3.9 Concentrate the extract using one of the macro-concentration procedures in Section 12.6 per the following:

12.3.9.1 Extracts from the particles in an aqueous sample containing less than 1% solids (Section 11.4.3.6).

12.3.9.1.1 Concentrate the extract to approximately 5 mL using the rotary evaporator or heating mantle procedures in Section 12.6.1 or 12.6.2.

12.3.9.1.2 Quantitatively transfer the extract through the sodium sulfate (Section 12.1.3) into the apparatus that was set aside (Section 12.1.4.2) and reconcentrate to the level of the toluene.

12.3.9.1.3 Adjust to approximately 10 mL with hexane, transfer to a 250 mL separatory funnel, and proceed with back-extraction (Section 12.5).

12.3.9.2 Extracts from particles (Sections 11.5 through 11.6) or from the SPE filter and disk (Section 12.2.2.4)—Concentrate to approximately 10 mL using the rotary evaporator or heating mantle (Section 12.6.1 or 12.6.2), transfer to a 250 mL separatory funnel, and proceed with back-extraction (Section 12.5).

12.4 Extraction of Tissue—Two procedures are provided for tissue extraction.

12.4.1 Soxhlet extraction (Reference 21).

12.4.1.1 Add 30–40 g of powdered anhydrous sodium sulfate to each of the beakers (Section 11.8.4) and mix thoroughly. Cover the beakers with aluminum foil and allow to equilibrate for 12–24 hours. Remix prior to extraction to prevent clumping.

12.4.1.2 Assemble and pre-extract the Soxhlet apparatus per Sections 12.3.1 through 12.3.4, except use the methylene chloride:hexane (1:1) mixture for the pre-extraction and rinsing and omit the quartz sand. The Dean-Stark moisture trap may also be omitted, if desired.

12.4.1.3 Reassemble the pre-extracted Soxhlet apparatus and add a fresh charge of methylene chloride:hexane to the reflux flask.

12.4.1.4 Transfer the sample/sodium sulfate mixture (Section 12.4.1.1) to the Soxhlet thimble, and install the thimble in the Soxhlet apparatus.

12.4.1.5 Rinse the beaker with several portions of solvent mixture and add to the thimble. Fill the thimble/receiver with solvent. Extract for 18–24 hours.

12.4.1.6 After extraction, cool and disassemble the apparatus.

12.4.1.7 Quantitatively transfer the extract to a macro-concentration device (Section 12.6), and concentrate to near dryness. Set aside the concentration apparatus for reuse.

12.4.1.8 Complete the removal of the solvent using the nitrogen blowdown procedure (Section 12.7) and a water bath temperature of 60 °C. Weigh the receiver, record the weight, and return the receiver to the blowdown apparatus, concentrating the residue until a constant weight is obtained.

12.4.1.9 Percent lipid determination—The lipid content is determined by extraction of tissue with the same solvent system (methylene chloride:hexane) that was used in EPA's National Dioxin Study (Reference 22) so that lipid contents are consistent with that study.

12.4.1.9.1 Redissolve the residue in the receiver in hexane and spike 1.0 mL of the cleanup standard (Section 7.11) into the solution.

12.4.1.9.2 Transfer the residue/hexane to the anthropogenic isolation column (Section 13.7.1) or bottle for the acidified silica gel batch cleanup (Section 13.7.2), retaining the boiling chips in the concentration apparatus. Use several rinses to assure that all material is transferred. If necessary, sonicate or heat the receiver slightly to assure that all material is re-dissolved. Allow the receiver to dry. Weigh the receiver and boiling chips.

12.4.1.9.3 Calculate the lipid content to the nearest three significant figures as follows:

$$\text{Percent lipid} = \frac{\text{Weight of residue (g)}}{\text{Weight of tissue (g)}} \times 100$$

12.4.1.9.4 It is not necessary to determine the lipid content of the blank, IPR, or OPR aliquots.

12.4.2 HCl digestion/extraction and concentration (References 23–26).

12.4.2.1 Add 200 mL of 6 N HCl and 200 mL of methylene chloride:hexane (1:1) to the sample and QC aliquots (Section 11.8.4).

12.4.2.2 Cap and shake each bottle one to three times. Loosen the cap in a hood to vent excess pressure. Shake each bottle for 10–30 seconds and vent.

12.4.2.3 Tightly cap and place on shaker. Adjust the shaker action and speed so that the acid, solvent, and tissue are in constant motion. However, take care to avoid such violent action that the bottle may be dislodged from the shaker. Shake for 12–24 hours.

12.4.2.4 After digestion, remove the bottles from the shaker. Allow the bottles to stand so that the solvent and acid layers separate.

12.4.2.5 Decant the solvent through a glass funnel with glass-fiber filter (Sections 6.5.2 through 6.5.3) containing approximately 10 g of granular anhydrous sodium sulfate (Section 7.2.1) into a macro-concentration apparatus (Section 12.6). Rinse the contents of the bottle with two 25 mL portions of hexane and pour through the sodium sulfate into the apparatus.

12.4.2.6 Concentrate the solvent to near dryness using a macro-concentration procedure (Section 12.6).

12.4.2.7 Complete the removal of the solvent using the nitrogen blowdown apparatus (Section 12.7) and a water bath temperature of 60 °C. Weigh the receiver, record the weight, and return the receiver to the blowdown apparatus, concentrating the residue until a constant weight is obtained.

12.4.2.8 Percent lipid determination—The lipid content is determined in the same solvent system [methylene chloride:hexane (1:1)] that was used in EPA's National Dioxin Study (Reference 22) so that lipid contents are consistent with that study.

12.4.2.8.1 Redissolve the residue in the receiver in hexane and spike 1.0 mL of the cleanup standard (Section 7.11) into the solution.

12.4.2.8.2 Transfer the residue/hexane to the narrow-mouth 100–200 mL bottle retaining the boiling chips in the receiver. Use several rinses to assure that all material is transferred, to a maximum hexane volume of approximately 70 mL. Allow the receiver to dry. Weigh the receiver and boiling chips.

12.4.2.8.3 Calculate the percent lipid per Section 12.4.1.9.3. It is not necessary to determine the lipid content of the blank, IPR, or OPR aliquots.

12.4.2.9 Clean up the extract per Section 13.7.3.

12.5 Back-Extraction with Base and Acid.

12.5.1 Spike 1.0 mL of the cleanup standard (Section 7.11) into the separatory funnels containing the sample and QC extracts from Section 12.1.4.1, 12.3.9.1.3, or 12.3.9.2.

12.5.2 Partition the extract against 50 mL of potassium hydroxide solution (Section 7.1.1). Shake for two minutes with periodic venting into a hood. Remove and discard the aqueous layer. Repeat the base washing until no color is visible in the aqueous layer, to a maximum of four washings. Minimize contact time between the extract and the base to prevent degradation of the CDDs/CDFs. Stronger potassium hydroxide solutions may be employed for back-extraction, provided that the laboratory meets the specifications for labeled compound recovery and demonstrates acceptable performance using the procedure in Section 9.2.

12.5.3 Partition the extract against 50 mL of sodium chloride solution (Section 7.1.4) in the same way as with base. Discard the aqueous layer.

12.5.4 Partition the extract against 50 mL of sulfuric acid (Section 7.1.2) in the same way as with base. Repeat the acid washing until no color is visible in the aqueous layer, to a maximum of four washings.

12.5.5 Repeat the partitioning against sodium chloride solution and discard the aqueous layer.

12.5.6 Pour each extract through a drying column containing 7–10 cm of granular anhydrous sodium sulfate (Section 7.2.1). Rinse the separatory funnel with 30–50 mL of solvent, and pour through the drying column. Collect each extract in a round-bottom flask. Re-concentrate the sample and QC aliquots per Sections 12.6 through 12.7, and clean up the samples and QC aliquots per Section 13.

12.6 Macro-Concentration—Extracts in toluene are concentrated using a rotary evaporator or a heating mantle; extracts in methylene chloride or hexane are concentrated using a rotary evaporator, heating mantle, or Kuderna-Danish apparatus.

12.6.1 Rotary evaporation—Concentrate the extracts in separate round-bottom flasks.

12.6.1.1 Assemble the rotary evaporator according to manufacturer's instructions, and warm the water bath to 45 °C. On a daily basis, preclean the rotary evaporator by concentrating 100 mL of clean extraction solvent through the system. Archive both the concentrated solvent and the solvent in the catch flask for a contamination check if necessary. Between samples, three 2–3 mL aliquots of solvent should be rinsed down the feed tube into a waste beaker.

12.6.1.2 Attach the round-bottom flask containing the sample extract to the rotary evaporator. Slowly apply vacuum to the system, and begin rotating the sample flask.

12.6.1.3 Lower the flask into the water bath, and adjust the speed of rotation and the temperature as required to complete concentration in 15–20 minutes. At the proper rate of concentration, the flow of solvent into the receiving flask will be steady, but no bumping or visible boiling of the extract will occur.

NOTE: If the rate of concentration is too fast, analyte loss may occur.

12.6.1.4 When the liquid in the concentration flask has reached an apparent volume of approximately 2 mL, remove the flask from the water bath and stop the rotation. Slowly and carefully admit air into the system. Be sure not to open the valve so quickly that the sample is blown out of the flask. Rinse the feed tube with approximately 2 mL of solvent.

12.6.1.5 Proceed to Section 12.6.4 for preparation for back-extraction or micro-concentration and solvent exchange.

12.6.2 Heating mantle—Concentrate the extracts in separate round-bottom flasks.

12.6.2.1 Add one or two clean boiling chips to the round-bottom flask, and attach a three-ball macro Snyder column. Prewet the column by adding approximately 1 mL of solvent through the top. Place the round-bottom flask in a heating mantle, and apply heat as required to complete the concentration in 15–20 minutes. At the proper rate of distillation, the balls of the column will actively chatter, but the chambers will not flood.

12.6.2.2 When the liquid has reached an apparent volume of approximately 10 mL, remove the round-bottom flask from the heating mantle and allow the solvent to drain and cool for at least 10 minutes. Remove the Snyder column and rinse the glass joint into the receiver with small portions of solvent.

12.6.2.3 Proceed to Section 12.6.4 for preparation for back-extraction or micro-concentration and solvent exchange.

12.6.3 Kuderna-Danish (K-D)—Concentrate the extracts in separate 500 mL K-D flasks equipped with 10 mL concentrator tubes. The K-D technique is used for solvents such as methylene chloride and hexane. Toluene is difficult to concentrate using the K-D technique unless a water bath fed by a steam generator is used.

12.6.3.1 Add one to two clean boiling chips to the receiver. Attach a three-ball macro Snyder column. Prewet the column by adding approximately 1 mL of solvent through the top. Place the K-D apparatus in a hot water bath so that the entire lower rounded surface of the flask is bathed with steam.

12.6.3.2 Adjust the vertical position of the apparatus and the water temperature as required to complete the concentration in 15–20 minutes. At the proper rate of distillation, the balls of the column will actively chatter but the chambers will not flood.

12.6.3.3 When the liquid has reached an apparent volume of 1 mL, remove the K-D apparatus from the bath and allow the solvent to drain and cool for at least 10 minutes. Remove the Snyder column and rinse the flask and its lower joint into the concentrator tube with 1–2 mL of solvent. A 5 mL syringe is recommended for this operation.

12.6.3.4 Remove the three-ball Snyder column, add a fresh boiling chip, and attach a two-ball micro Snyder column to the concentrator tube. Prewet the column by adding approximately 0.5 mL of solvent through the top. Place the apparatus in the hot water bath.

12.6.3.5 Adjust the vertical position and the water temperature as required to complete the concentration in 5–10 minutes. At the proper rate of distillation, the balls of the column will actively chatter but the chambers will not flood.

12.6.3.6 When the liquid reaches an apparent volume of 0.5 mL, remove the apparatus from the water bath and allow to drain and cool for at least 10 minutes.

12.6.3.7 Proceed to 12.6.4 for preparation for back-extraction or micro-concentration and solvent exchange.

12.6.4 Preparation for back-extraction or micro-concentration and solvent exchange.

12.6.4.1 For back-extraction (Section 12.5), transfer the extract to a 250 mL separatory funnel. Rinse the concentration vessel with small portions of hexane, adjust the hexane volume in the separatory funnel to 10–20 mL, and proceed to back-extraction (Section 12.5).

12.6.4.2 For determination of the weight of residue in the extract, or for clean-up procedures other than back-extraction, transfer the extract to a blowdown vial using two to three rinses of solvent. Proceed with micro-concentration and solvent exchange (Section 12.7).

12.7 Micro-Concentration and Solvent Exchange.

12.7.1 Extracts to be subjected to GPC or HPLC cleanup are exchanged into methylene chloride. Extracts to be cleaned up using silica gel, alumina, carbon, and/or Florisil are exchanged into hexane.

12.7.2 Transfer the vial containing the sample extract to a nitrogen blowdown device. Adjust the flow of nitrogen so that the surface of the solvent is just visibly disturbed.

NOTE: A large vortex in the solvent may cause analyte loss.

12.7.3 Lower the vial into a 45 °C water bath and continue concentrating.

12.7.3.1 If the extract is to be concentrated to dryness for weight determination (Sections 12.4.1.8, 12.4.2.7, and 13.7.1.4), blow dry until a constant weight is obtained.

12.7.3.2 If the extract is to be concentrated for injection into the GC/MS or the solvent is to be exchanged for extract cleanup, proceed as follows:

12.7.4 When the volume of the liquid is approximately 100 L, add 2–3 mL of the desired solvent (methylene chloride for GPC and HPLC, or hexane for the other cleanups) and continue concentration to approximately 100 µL. Repeat the addition of solvent and concentrate once more.

12.7.5 If the extract is to be cleaned up by GPC, adjust the volume of the extract to 5.0 mL with methylene chloride. If the extract is to be cleaned up by HPLC, further concentrate the extract to 30 µL. Proceed with GPC or HPLC cleanup (Section 13.2 or 13.6, respectively).

12.7.6 If the extract is to be cleaned up by column chromatography (alumina, silica gel, Carbopak/Celite, or Florisil), bring the final

volume to 1.0 mL with hexane. Proceed with column cleanups (Sections 13.3 through 13.5 and 13.8).

12.7.7 If the extract is to be concentrated for injection into the GC/MS (Section 14), quantitatively transfer the extract to a 0.3 mL conical vial for final concentration, rinsing the larger vial with hexane and adding the rinse to the conical vial. Reduce the volume to approximately 100 µL. Add 10 µL of nonane to the vial, and evaporate the solvent to the level of the nonane. Seal the vial and label with the sample number. Store in the dark at room temperature until ready for GC/MS analysis. If GC/MS analysis will not be performed on the same day, store the vial at < −10 °C.

13.0 Extract Cleanup

13.1 Cleanup may not be necessary for relatively clean samples (e.g., treated effluents, groundwater, drinking water). If particular circumstances require the use of a cleanup procedure, the analyst may use any or all of the procedures below or any other appropriate procedure. Before using a cleanup procedure, the analyst must demonstrate that the requirements of Section 9.2 can be met using the cleanup procedure. If only 2,3,7,8-TCDD and 2,3,7,8-TCDF are to be determined, the cleanup procedures may be optimized for isolation of these two compounds.

13.1.1 Gel permeation chromatography (Section 13.2) removes high molecular weight interferences that cause GC column performance to degrade. It should be used for all soil and sediment extracts and may be used for water extracts that are expected to contain high molecular weight organic compounds (e.g., polymeric materials, humic acids).

13.1.2 Acid, neutral, and basic silica gel (Section 13.3), alumina (Section 13.4), and Florisil (Section 13.8) are used to remove nonpolar and polar interferences. Alumina and Florisil are used to remove chlorodiphenyl ethers.

13.1.3 Carbopak/Celite (Section 13.5) is used to remove nonpolar interferences.

13.1.4 HPLC (Section 13.6) is used to provide specificity for the 2,3,7,8-substituted and other CDD and CDF isomers.

13.1.5 The anthropogenic isolation column (Section 13.7.1), acidified silica gel batch adsorption procedure (Section 13.7.2), and sulfuric acid and base back-extraction (Section 13.7.3) are used for removal of lipids from tissue samples.

13.2 Gel Permeation Chromatography (GPC).

13.2.1 Column packing.

13.2.1.1 Place 70–75 g of SX–3 Bio-beads (Section 6.7.1.1) in a 400–500 mL beaker.

13.2.1.2 Cover the beads with methylene chloride and allow to swell overnight (a minimum of 12 hours).

13.2.1.3 Transfer the swelled beads to the column (Section 6.7.1.1) and pump solvent through the column, from bottom to top, at 4.5–5.5 mL/minute prior to connecting the column to the detector.

13.2.1.4 After purging the column with solvent for one to two hours, adjust the column head pressure to 7–10 psig and purge for four to five hours to remove air. Maintain a head pressure of 7–10 psig. Connect the column to the detector (Section 6.7.1.4).

13.2.2 Column calibration.

13.2.2.1 Load 5 mL of the calibration solution (Section 7.4) into the sample loop.

13.2.2.2 Inject the calibration solution and record the signal from the detector. The elution pattern will be corn oil, bis(2-ethyl hexyl)phthalate, pentachlorophenol, perylene, and sulfur.

13.2.2.3 Set the ''dump time'' to allow >85% removal of the corn oil and >85% collection of the phthalate.

13.2.2.4 Set the ''collect time'' to the peak minimum between perylene and sulfur.

13.2.2.5 Verify the calibration with the calibration solution after every 20 extracts. Calibration is verified if the recovery of the pentachlorophenol is greater than 85%. If calibration is not verified, the system shall be recalibrated using the calibration solution, and the previous 20 samples shall be re-extracted and cleaned up using the calibrated GPC system.

13.2.3 Extract cleanup—GPC requires that the column not be overloaded. The column specified in this method is designed to handle a maximum of 0.5 g of high molecular weight material in a 5 mL extract. If the extract is known or expected to contain more than 0.5 g, the extract is split into aliquots for GPC, and the aliquots are combined after elution from the column. The residue content of the extract may be obtained gravimetrically by evaporating the solvent from a 50 µL aliquot.

13.2.3.1 Filter the extract or load through the filter holder (Section 6.7.1.3) to remove the particles. Load the 5.0 mL extract onto the column.

13.2.3.2 Elute the extract using the calibration data determined in Section 13.2.2. Collect the eluate in a clean 400–500 mL beaker.

13.2.3.3 Rinse the sample loading tube thoroughly with methylene chloride between extracts to prepare for the next sample.

13.2.3.4 If a particularly dirty extract is encountered, a 5.0 mL methylene chloride blank shall be run through the system to check for carry-over.

13.2.3.5 Concentrate the eluate per Sections 12.6 and 12.7 for further cleanup or injection into the GC/MS.

13.3 Silica Gel Cleanup.

13.3.1 Place a glass-wool plug in a 15 mm ID chromatography column (Section 6.7.4.2). Pack the column bottom to top with: 1 g silica gel (Section 7.5.1.1), 4 g basic silica gel (Section 7.5.1.3), 1 g silica gel, 8 g acid silica

gel (Section 7.5.1.2), 2 g silica gel, and 4 g granular anhydrous sodium sulfate (Section 7.2.1). Tap the column to settle the adsorbents.

13.3.2 Pre-elute the column with 50–100 mL of hexane. Close the stopcock when the hexane is within 1 mm of the sodium sulfate. Discard the eluate. Check the column for channeling. If channeling is present, discard the column and prepare another.

13.3.3 Apply the concentrated extract to the column. Open the stopcock until the extract is within 1 mm of the sodium sulfate.

13.3.4 Rinse the receiver twice with 1 mL portions of hexane, and apply separately to the column. Elute the CDDs/CDFs with 100 mL hexane, and collect the eluate.

13.3.5 Concentrate the eluate per Sections 12.6 and 12.7 for further cleanup or injection into the HPLC or GC/MS.

13.3.6 For extracts of samples known to contain large quantities of other organic compounds (such as paper mill effluents), it may be advisable to increase the capacity of the silica gel column. This may be accomplished by increasing the strengths of the acid and basic silica gels. The acid silica gel (Section 7.5.1.2) may be increased in strength to as much as 44% w/w (7.9 g sulfuric acid added to 10 g silica gel). The basic silica gel (Section 7.5.1.3) may be increased in strength to as much as 33% w/w (50 mL 1N NaOH added to 100 g silica gel), or the potassium silicate (Section 7.5.1.4) may be used.

NOTE: The use of stronger acid silica gel (44% w/w) may lead to charring of organic compounds in some extracts. The charred material may retain some of the analytes and lead to lower recoveries of CDDs/CDFs. Increasing the strengths of the acid and basic silica gel may also require different volumes of hexane than those specified above to elute the analytes off the column. Therefore, the performance of the method after such modifications must be verified by the procedure in Section 9.2.

13.4 Alumina Cleanup.

13.4.1 Place a glass-wool plug in a 15 mm ID chromatography column (Section 6.7.4.2).

13.4.2 If using acid alumina, pack the column by adding 6 g acid alumina (Section 7.5.2.1). If using basic alumina, substitute 6 g basic alumina (Section 7.5.2.2). Tap the column to settle the adsorbents.

13.4.3 Pre-elute the column with 50–100 mL of hexane. Close the stopcock when the hexane is within 1 mm of the alumina.

13.4.4 Discard the eluate. Check the column for channeling. If channeling is present, discard the column and prepare another.

13.4.5 Apply the concentrated extract to the column. Open the stopcock until the extract is within 1 mm of the alumina.

13.4.6 Rinse the receiver twice with 1 mL portions of hexane and apply separately to the column. Elute the interfering compounds with 100 mL hexane and discard the eluate.

13.4.7 The choice of eluting solvents will depend on the choice of alumina (acid or basic) made in Section 13.4.2.

13.4.7.1 If using acid alumina, elute the CDDs/CDFs from the column with 20 mL methylene chloride:hexane (20:80 v/v). Collect the eluate.

13.4.7.2 If using basic alumina, elute the CDDs/CDFs from the column with 20 mL methylene chloride:hexane (50:50 v/v). Collect the eluate.

13.4.8 Concentrate the eluate per Sections 12.6 and 12.7 for further cleanup or injection into the HPLC or GC/MS.

13.5 Carbon Column.

13.5.1 Cut both ends from a 10 mL disposable serological pipet (Section 6.7.3.2) to produce a 10 cm column. Fire-polish both ends and flare both ends if desired. Insert a glass-wool plug at one end, and pack the column with 0.55 g of Carbopak/Celite (Section 7.5.3.3) to form an adsorbent bed approximately 2 cm long. Insert a glass-wool plug on top of the bed to hold the adsorbent in place.

13.5.2 Pre-elute the column with 5 mL of toluene followed by 2 mL of methylene chloride: methanol:toluene (15:4:1 v/v), 1 mL of methylene chloride:cyclohexane (1:1 v/v), and 5 mL of hexane. If the flow rate of eluate exceeds 0.5 mL/minute, discard the column.

13.5.3 When the solvent is within 1 mm of the column packing, apply the sample extract to the column. Rinse the sample container twice with 1 mL portions of hexane and apply separately to the column. Apply 2 mL of hexane to complete the transfer.

13.5.4 Elute the interfering compounds with two 3 mL portions of hexane, 2 mL of methylene chloride:cyclohexane (1:1 v/v), and 2 mL of methylene chloride:methanol:toluene (15:4:1 v/v). Discard the eluate.

13.5.5 Invert the column, and elute the CDDs/CDFs with 20 mL of toluene. If carbon particles are present in the eluate, filter through glass-fiber filter paper.

13.5.6 Concentrate the eluate per Sections 12.6 and 12.7 for further cleanup or injection into the HPLC or GC/MS.

13.6 HPLC (Reference 6).

13.6.1 Column calibration.

13.6.1.1 Prepare a calibration standard containing the 2,3,7,8-substituted isomers and/or other isomers of interest at a concentration of approximately 500 pg/μL in methylene chloride.

13.6.1.2 Inject 30 μL of the calibration solution into the HPLC and record the signal from the detector. Collect the eluant for reuse. The elution order will be the tetra-through octa-isomers.

13.6.1.3 Establish the collection time for the tetra-isomers and for the other isomers of interest. Following calibration, flush the injection system with copious quantities of

methylene chloride, including a minimum of five 50 µL injections while the detector is monitored, to ensure that residual CDDs/CDFs are removed from the system.

13.6.1.4 Verify the calibration with the calibration solution after every 20 extracts. Calibration is verified if the recovery of the CDDs/CDFs from the calibration standard (Section 13.6.1.1) is 75–125% compared to the calibration (Section 13.6.1.2). If calibration is not verified, the system shall be recalibrated using the calibration solution, and the previous 20 samples shall be re-extracted and cleaned up using the calibrated system.

13.6.2 Extract cleanup—HPLC requires that the column not be overloaded. The column specified in this method is designed to handle a maximum of 30 µL of extract. If the extract cannot be concentrated to less than 30 µL, it is split into fractions and the fractions are combined after elution from the column.

13.6.2.1 Rinse the sides of the vial twice with 30 µL of methylene chloride and reduce to 30 µL with the evaporation apparatus (Section 12.7).

13.6.2.2 Inject the 30 µL extract into the HPLC.

13.6.2.3 Elute the extract using the calibration data determined in Section 13.6.1. Collect the fraction(s) in a clean 20 mL concentrator tube containing 5 mL of hexane:acetone (1:1 v/v).

13.6.2.4 If an extract containing greater than 100 ng/mL of total CDD or CDF is encountered, a 30 µL methylene chloride blank shall be run through the system to check for carry-over.

13.6.2.5 Concentrate the eluate per Section 12.7 for injection into the GC/MS.

13.7 Cleanup of Tissue Lipids—Lipids are removed from the Soxhlet extract using either the anthropogenic isolation column (Section 13.7.1) or acidified silica gel (Section 13.7.2), or are removed from the HCl digested extract using sulfuric acid and base back-extraction (Section 13.7.3).

13.7.1 Anthropogenic isolation column (References 22 and 27)—Used for removal of lipids from the Soxhlet/SDS extraction (Section 12.4.1).

13.7.1.1 Prepare the column as given in Section 7.5.4.

13.7.1.2 Pre-elute the column with 100 mL of hexane. Drain the hexane layer to the top of the column, but do not expose the sodium sulfate.

13.7.1.3 Load the sample and rinses (Section 12.4.1.9.2) onto the column by draining each portion to the top of the bed. Elute the CDDs/CDFs from the column into the apparatus used for concentration (Section 12.4.1.7) using 200 mL of hexane.

13.7.1.4 Concentrate the cleaned up extract (Sections 12.6 through 12.7) to constant weight per Section 12.7.3.1. If more than 500 mg of material remains, repeat the cleanup using a fresh anthropogenic isolation column.

13.7.1.5 Redissolve the extract in a solvent suitable for the additional cleanups to be used (Sections 13.2 through 13.6 and 13.8).

13.7.1.6 Spike 1.0 mL of the cleanup standard (Section 7.11) into the residue/solvent.

13.7.1.7 Clean up the extract using the procedures in Sections 13.2 through 13.6 and 13.8. Alumina (Section 13.4) or Florisil (Section 13.8) and carbon (Section 13.5) are recommended as minimum additional cleanup steps.

13.7.1.8 Following cleanup, concentrate the extract to 10 µL as described in Section 12.7 and proceed with the analysis in Section 14.

13.7.2 Acidified silica gel (Reference 28)—Procedure alternate to the anthropogenic isolation column (Section 13.7.1) that is used for removal of lipids from the Soxhlet/SDS extraction (Section 12.4.1).

13.7.2.1 Adjust the volume of hexane in the bottle (Section 12.4.1.9.2) to approximately 200 mL.

13.7.2.2 Spike 1.0 mL of the cleanup standard (Section 7.11) into the residue/solvent.

13.7.2.3 Drop the stirring bar into the bottle, place the bottle on the stirring plate, and begin stirring.

13.7.2.4 Add 30–100 g of acid silica gel (Section 7.5.1.2) to the bottle while stirring, keeping the silica gel in motion. Stir for two to three hours.

NOTE: 30 grams of silica gel should be adequate for most samples and will minimize contamination from this source.

13.7.2.5 After stirring, pour the extract through approximately 10 g of granular anhydrous sodium sulfate (Section 7.2.1) contained in a funnel with glass-fiber filter into a macro contration device (Section 12.6). Rinse the bottle and sodium sulfate with hexane to complete the transfer.

13.7.2.6 Concentrate the extract per Sections 12.6 through 12.7 and clean up the extract using the procedures in Sections 13.2 through 13.6 and 13.8. Alumina (Section 13.4) or Florisil (Section 13.8) and carbon (Section 13.5) are recommended as minimum additional cleanup steps.

13.7.3 Sulfuric acid and base back-extraction. Used with HCl digested extracts (Section 12.4.2).

13.7.3.1 Spike 1.0 mL of the cleanup standard (Section 7.11) into the residue/solvent (Section 12.4.2.8.2).

13.7.3.2 Add 10 mL of concentrated sulfuric acid to the bottle. Immediately cap and shake one to three times. Loosen cap in a hood to vent excess pressure. Cap and shake the bottle so that the residue/solvent is exposed to the acid for a total time of approximately 45 seconds.

13.7.3.3 Decant the hexane into a 250 mL separatory funnel making sure that no acid

is transferred. Complete the quantitative transfer with several hexane rinses.

13.7.3.4 Back extract the solvent/residue with 50 mL of potassium hydroxide solution per Section 12.5.2, followed by two reagent water rinses.

13.7.3.5 Drain the extract through a filter funnel containing approximately 10 g of granular anhydrous sodium sulfate in a glass-fiber filter into a macro concentration device (Section 12.6).

13.7.3.6 Concentrate the cleaned up extract to a volume suitable for the additional cleanups given in Sections 13.2 through 13.6 and 13.8. Gel permeation chromatography (Section 13.2), alumina (Section 13.4) or Florisil (Section 13.8), and Carbopak/Celite (Section 13.5) are recommended as minimum additional cleanup steps.

13.7.3.7 Following cleanup, concentrate the extract to 10 L as described in Section 12.7 and proceed with analysis per Section 14.

13.8 Florisil Cleanup (Reference 29).

13.8.1 Pre-elute the activated Florisil column (Section 7.5.3) with 10 mL of methylene chloride followed by 10 mL of hexane:methylene chloride (98:2 v/v) and discard the solvents.

13.8.2 When the solvent is within 1 mm of the packing, apply the sample extract (in hexane) to the column. Rinse the sample container twice with 1 mL portions of hexane and apply to the column.

13.8.3 Elute the interfering compounds with 20 mL of hexane:methylene chloride (98:2) and discard the eluate.

13.8.4 Elute the CDDs/CDFs with 35 mL of methylene chloride and collect the eluate. Concentrate the eluate per Sections 12.6 through 12.7 for further cleanup or for injection into the HPLC or GC/MS.

14.0 HRGC/HRMS Analysis

14.1 Establish the operating conditions given in Section 10.1.

14.2 Add 10 uL of the appropriate internal standard solution (Section 7.12) to the sample extract immediately prior to injection to minimize the possibility of loss by evaporation, adsorption, or reaction. If an extract is to be reanalyzed and evaporation has occurred, do not add more instrument internal standard solution. Rather, bring the extract back to its previous volume (e.g., 19 L) with pure nonane only (18 L if 2 L injections are used).

14.3 Inject 1.0 µL or 2.0 µL of the concentrated extract containing the internal standard solution, using on-column or splitless injection. The volume injected must be identical to the volume used for calibration (Section 10). Start the GC column initial isothermal hold upon injection. Start MS data collection after the solvent peak elutes. Stop data collection after the OCDD and OCDF have eluted. If only 2,3,7,8-TCDD and 2,3,7,8-TCDF are to be determined, stop data collection after elution of these compounds. Return the column to the initial temperature for analysis of the next extract or standard.

15.0 System and Laboratory Performance

15.1 At the beginning of each 12-hour shift during which analyses are performed, GC/MS system performance and calibration are verified for all CDDs/CDFs and labeled compounds. For these tests, analysis of the CS3 calibration verification (VER) standard (Section 7.13 and Table 4) and the isomer specificity test standards (Section 7.15 and Table 5) shall be used to verify all performance criteria. Adjustment and/or recalibration (Section 10) shall be performed until all performance criteria are met. Only after all performance criteria are met may samples, blanks, IPRs, and OPRs be analyzed.

15.2 MS Resolution—A static resolving power of at least 10,000 (10% valley definition) must be demonstrated at the appropriate m/z before any analysis is performed. Static resolving power checks must be performed at the beginning and at the end of each 12-hour shift according to procedures in Section 10.1.2. Corrective actions must be implemented whenever the resolving power does not meet the requirement.

15.3 Calibration Verification.

15.3.1 Inject the VER standard using the procedure in Section 14.

15.3.2 The m/z abundance ratios for all CDDs/CDFs shall be within the limits in Table 9; otherwise, the mass spectrometer shall be adjusted until the m/z abundance ratios fall within the limits specified, and the verification test shall be repeated. If the adjustment alters the resolution of the mass spectrometer, resolution shall be verified (Section 10.1.2) prior to repeat of the verification test.

15.3.3 The peaks representing each CDD/CDF and labeled compound in the VER standard must be present with S/N of at least 10; otherwise, the mass spectrometer shall be adjusted and the verification test repeated.

15.3.4 Compute the concentration of each CDD/CDF compound by isotope dilution (Section 10.5) for those compounds that have labeled analogs (Table 1). Compute the concentration of the labeled compounds by the internal standard method (Section 10.6). These concentrations are computed based on the calibration data in Section 10.

15.3.5 For each compound, compare the concentration with the calibration verification limit in Table 6. If only 2,3,7,8-TCDD and 2,3,7,8-TCDF are to be determined, compare the concentration to the limit in Table 6a. If all compounds meet the acceptance criteria, calibration has been verified and analysis of standards and sample extracts may proceed. If, however, any compound fails its respective limit, the measurement system is not performing properly for

that compound. In this event, prepare a fresh calibration standard or correct the problem causing the failure and repeat the resolution (Section 15.2) and verification (Section 15.3) tests, or recalibrate (Section 10).

15.4 Retention Times and GC Resolution.

15.4.1 Retention times.

15.4.1.1 Absolute—The absolute retention times of the $^{13}C_{12}$-1,2,3,4–TCDD and $^{13}C_{12}$-1,2,3,7,8,9-HxCDD GCMS internal standards in the verification test (Section 15.3) shall be within ±15 seconds of the retention times obtained during calibration (Sections 10.2.1 and 10.2.4).

15.4.1.2 Relative—The relative retention times of CDDs/CDFs and labeled compounds in the verification test (Section 15.3) shall be within the limits given in Table 2.

15.4.2 GC resolution.

15.4.2.1 Inject the isomer specificity standards (Section 7.15) on their respective columns.

15.4.2.2 The valley height between 2,3,7,8-TCDD and the other tetra-dioxin isomers at m/z 319.8965, and between 2,3,7,8-TCDF and the other tetra-furan isomers at m/z 303.9016 shall not exceed 25% on their respective columns (Figures 6 and 7).

15.4.3 If the absolute retention time of any compound is not within the limits specified or if the 2,3,7,8-isomers are not resolved, the GC is not performing properly. In this event, adjust the GC and repeat the verification test (Section 15.3) or recalibrate (Section 10), or replace the GC column and either verify calibration or recalibrate.

15.5 Ongoing Precision and Recovery.

15.5.1 Analyze the extract of the ongoing precision and recovery (OPR) aliquot (Section 11.4.2.5, 11.5.4, 11.6.2, 11.7.4, or 11.8.3.2) prior to analysis of samples from the same batch.

15.5.2 Compute the concentration of each CDD/CDF by isotope dilution for those compounds that have labeled analogs (Section 10.5). Compute the concentration of 1,2,3,7,8,9-HxCDD, OCDF, and each labeled compound by the internal standard method (Section 10.6).

15.5.3 For each CDD/CDF and labeled compound, compare the concentration to the OPR limits given in Table 6. If only 2,3,7,8-TCDD and 2,3,7,8-TCDF are to be determined, compare the concentration to the limits in Table 6a. If all compounds meet the acceptance criteria, system performance is acceptable and analysis of blanks and samples may proceed. If, however, any individual concentration falls outside of the range given, the extraction/concentration processes are not being performed properly for that compound. In this event, correct the problem, reprepare, extract, and clean up the sample batch and repeat the ongoing precision and recovery test (Section 15.5).

15.5.4 Add results that pass the specifications in Section 15.5.3 to initial and previous ongoing data for each compound in each matrix. Update QC charts to form a graphic representation of continued laboratory performance. Develop a statement of laboratory accuracy for each CDD/CDF in each matrix type by calculating the average percent recovery (R) and the standard deviation of percent recovery (S_R). Express the accuracy as a recovery interval from $R-2S_R$ to $R = 2S_R$. For example, if R = 95% and S_R = 5%, the accuracy is 85–105%.

15.6 Blank—Analyze the method blank extracted with each sample batch immediately following analysis of the OPR aliquot to demonstrate freedom from contamination and freedom from carryover from the OPR analysis. The results of the analysis of the blank must meet the specifications in Section 9.5.2 before sample analyses may proceed.

16.0 Qualitative Determination

A CDD, CDF, or labeled compound is identified in a standard, blank, or sample when all of the criteria in Sections 16.1 through 16.4 are met.

16.1 The signals for the two exact m/z's in Table 8 must be present and must maximize within the same two seconds.

16.2 The signal-to-noise ratio (S/N) for the GC peak at each exact m/z must be greater than or equal to 2.5 for each CDD or CDF detected in a sample extract, and greater than or equal to 10 for all CDDs/CDFs in the calibration standard (Sections 10.2.3 and 15.3.3).

16.3 The ratio of the integrated areas of the two exact m/z's specified in Table 8 must be within the limit in Table 9, or within ±10% of the ratio in the midpoint (CS3) calibration or calibration verification (VER), whichever is most recent.

16.4 The relative retention time of the peak for a 2,3,7,8-substituted CDD or CDF must be within the limit in Table 2. The retention time of peaks representing non-2,3,7,8-substituted CDDs/CDFs must be within the retention time windows established in Section 10.3.

16.5 Confirmatory Analysis—Isomer specificity for 2,3,7,8-TCDF cannot be achieved on the DB–5 column. Therefore, any sample in which 2,3,7,8-TCDF is identified by analysis on a DB–5 column must have a confirmatory analysis performed on a DB–225, SP–2330, or equivalent GC column. The operating conditions in Section 10.1.1 may be adjusted to optimize the analysis on the second GC column, but the GC/MS must meet the mass resolution and calibration specifications in Section 10.

16.6 If the criteria for identification in Sections 16.1 through 16.5 are not met, the CDD or CDF has not been identified and the results may not be reported for regulatory compliance purposes. If interferences preclude identification, a new aliquot of sample

must be extracted, further cleaned up, and analyzed.

17.0 Quantitative Determination

17.1 Isotope Dilution Quantitation—By adding a known amount of a labeled compound to every sample prior to extraction, correction for recovery of the CDD/CDF can be made because the CDD/CDF and its labeled analog exhibit similar effects upon extraction, concentration, and gas chromatography. Relative response (RR) values are used in conjunction with the initial calibration data described in Section 10.5 to determine concentrations directly, so long as labeled compound spiking levels are constant, using the following equation:

$$C_{ex}\ (\text{ng/mL}) = \frac{\left(A1_n + A2_n\right) C_l}{\left(A1_l + A2_l\right) RR}$$

where:

C_{ex} = The concentration of the CDD/CDF in the extract, and the other terms are as defined in Section 10.5.2.

17.1.1 Because of a potential interference, the labeled analog of OCDF is not added to the sample. Therefore, OCDF is quantitated against labeled OCDD. As a result, the concentration of OCDF is corrected for the recovery of the labeled OCDD. In instances where OCDD and OCDF behave differently during sample extraction, concentration, and cleanup procedures, this may decrease the accuracy of the OCDF results. However, given the low toxicity of this compound relative to the other dioxins and furans, the potential decrease in accuracy is not considered significant.

17.1.2 Because $^{13}C_{12}$-1,2,3,7,8,9-HxCDD is used as an instrument internal standard (*i.e.*, not added before extraction of the sample), it cannot be used to quantitate the 1,2,3,7,8,9-HxCDD by strict isotope dilution procedures. Therefore, 1,2,3,7,8,9-HxCDD is quantitated using the averaged response of the labeled analogs of the other two 2,3,7,8-substituted HxCDD's: 1,2,3,4,7,8-HxCDD and 1,2,3,6,7,8-HxCDD. As a result, the concentration of 1,2,3,7,8,9-HxCDD is corrected for the average recovery of the other two HxCDD's.

17.1.3 Any peaks representing non-2,3,7,8-substituted CDDs/CDFs are quantitated using an average of the response factors from all of the labeled 2,3,7,8-isomers at the same level of chlorination.

17.2 Internal Standard Quantitation and Labeled Compound Recovery.

17.2.1 Compute the concentrations of 1,2,3,7,8,9-HxCDD, OCDF, the ^{13}C-labeled analogs and the ^{37}C-labeled cleanup standard in the extract using the response factors determined from the initial calibration data (Section 10.6) and the following equation:

$$C_{ex}\ (\text{ng/mL}) = \frac{\left(A1_s + A2_s\right) C_{is}}{\left(A1_{is} + A2_{is}\right) RF}$$

where:

C_{ex} = The concentration of the CDD/CDF in the extract, and the other terms are as defined in Section 10.6.1.

NOTE: There is only one m/z for the ^{37}Cl-labeled standard.

17.2.2 Using the concentration in the extract determined above, compute the percent recovery of the ^{13}C-labeled compounds and the ^{37}C-labeled cleanup standard using the following equation:

$$\text{Recovery (\%)} = \frac{\text{Concentration found (}\mu\text{g/mL)}}{\text{Concentration spiked (}\mu\text{g/mL)}} \times 100$$

17.3 The concentration of a CDD/CDF in the solid phase of the sample is computed using the concentration of the compound in the extract and the weight of the solids (Section 11.5.1), as follows:

$$\text{Concentration in solid (ng/kg)} = \frac{\left(C_{ex} \times V_{ex}\right)}{W_s}$$

where:

C_{ex} = The concentration of the compound in the extract.

V_{ex} = The extract volume in mL.

W_s = The sample weight (dry weight) in kg.

17.4 The concentration of a CDD/CDF in the aqueous phase of the sample is computed using the concentration of the compound in

the extract and the volume of water extracted (Section 11.4 or 11.5), as follows:

$$\text{Concentration in aqueous phase (pg/L)} = \frac{\left(C_{ex} \times V_{ex}\right)}{V_s}$$

where:

C_{ex} = The concentration of the compound in the extract.

V_{ex} = The extract volume in mL.

V_s = The sample volume in liters.

17.5 If the SICP area at either quantitation m/z for any compound exceeds the calibration range of the system, a smaller sample aliquot is extracted.

17.5.1 For aqueous samples containing 1% solids or less, dilute 100 mL, 10 mL, etc., of sample to 1 L with reagent water and re-prepare, extract, clean up, and analyze per Sections 11 through 14.

17.5.2 For samples containing greater than 1% solids, extract an amount of sample equal to 1/10, 1/100, etc., of the amount used in Section 11.5.1. Re-prepare, extract, clean up, and analyze per Sections 11 through 14.

17.5.3 If a smaller sample size will not be representative of the entire sample, dilute the sample extract by a factor of 10, adjust the concentration of the instrument internal standard to 100 pg/µL in the extract, and analyze an aliquot of this diluted extract by the internal standard method.

17.6 Results are reported to three significant figures for the CDDs/CDFs and labeled compounds found in all standards, blanks, and samples.

17.6.1 Reporting units and levels.

17.6.1.1 Aqueous samples—Report results in pg/L (parts-per-quadrillion).

17.6.1.2 Samples containing greater than 1% solids (soils, sediments, filter cake, compost)—Report results in ng/kg based on the dry weight of the sample. Report the percent solids so that the result may be corrected.

17.6.1.3 Tissues—Report results in ng/kg of wet tissue, not on the basis of the lipid content of the sample. Report the percent lipid content, so that the data user can calculate the concentration on a lipid basis if desired.

17.6.1.4 Reporting level.

17.6.1.4.1 Standards (VER, IPR, OPR) and samples—Report results at or above the minimum level (Table 2). Report results below the minimum level as not detected or as required by the regulatory authority.

17.6.1.4.2 Blanks—Report results above one-third the ML.

17.6.2 Results for CDDs/CDFs in samples that have been diluted are reported at the least dilute level at which the areas at the quantitation m/z's are within the calibration range (Section 17.5).

17.6.3 For CDDs/CDFs having a labeled analog, results are reported at the least dilute level at which the area at the quantitation m/z is within the calibration range (Section 17.5) and the labeled compound recovery is within the normal range for the method (Section 9.3 and Tables 6, 6a, 7, and 7a).

17.6.4 Additionally, if requested, the total concentration of all isomers in an individual level of chlorination (*i.e.*, total TCDD, total TCDF, total Paced, etc.) may be reported by summing the concentrations of all isomers identified in that level of chlorination, including both 2,3,7,8-substituted and non-2,3,7,8-substituted isomers.

18.0 Analysis of Complex Samples

18.1 Some samples may contain high levels (>10 ng/L; >1000 ng/kg) of the compounds of interest, interfering compounds, and/or polymeric materials. Some extracts will not concentrate to 10 µL (Section 12.7); others may overload the GC column and/or mass spectrometer.

18.2 Analyze a smaller aliquot of the sample (Section 17.5) when the extract will not concentrate to 10 µL after all cleanup procedures have been exhausted.

18.3 Chlorodiphenyl Ethers—If chromatographic peaks are detected at the retention time of any CDDs/CDFs in any of the m/z channels being monitored for the chlorodiphenyl ethers (Table 8), cleanup procedures must be employed until these interferences are removed. Alumina (Section 13.4) and Florisil (Section 13.8) are recommended for removal of chlorodiphenyl ethers.

18.4 Recovery of Labeled Compounds—In most samples, recoveries of the labeled compounds will be similar to those from reagent water or from the alternate matrix (Section 7.6).

18.4.1 If the recovery of any of the labeled compounds is outside of the normal range (Table 7), a diluted sample shall be analyzed (Section 17.5).

18.4.2 If the recovery of any of the labeled compounds in the diluted sample is outside of normal range, the calibration verification standard (Section 7.13) shall be analyzed and calibration verified (Section 15.3).

18.4.3 If the calibration cannot be verified, a new calibration must be performed and the original sample extract reanalyzed.

18.4.4 If the calibration is verified and the diluted sample does not meet the limits for labeled compound recovery, the method does not apply to the sample being analyzed and the result may not be reported for regulatory compliance purposes. In this case, alternate extraction and cleanup procedures in this method must be employed to resolve the interference. If all cleanup procedures in this method have been employed and labeled compound recovery remains outside of the normal range, extraction and/or cleanup procedures that are beyond this scope of this method will be required to analyze these samples.

19.0 Pollution Prevention

19.1 The solvents used in this method pose little threat to the environment when managed properly. The solvent evaporation techniques used in this method are amenable to solvent recovery, and it is recommended that the laboratory recover solvents wherever feasible.

19.2 Standards should be prepared in volumes consistent with laboratory use to minimize disposal of standards.

20.0 Waste Management

20.1 It is the laboratory's responsibility to comply with all federal, state, and local regulations governing waste management, particularly the hazardous waste identification rules and land disposal restrictions, and to protect the air, water, and land by minimizing and controlling all releases from fume hoods and bench operations. Compliance is also required with any sewage discharge permits and regulations.

20.2 Samples containing HCl to pH <2 are hazardous and must be neutralized before being poured down a drain or must be handled as hazardous waste.

20.3 The CDDs/CDFs decompose above 800 °C. Low-level waste such as absorbent paper, tissues, animal remains, and plastic gloves may be burned in an appropriate incinerator. Gross quantities (milligrams) should be packaged securely and disposed of through commercial or governmental channels that are capable of handling extremely toxic wastes.

20.4 Liquid or soluble waste should be dissolved in methanol or ethanol and irradiated with ultraviolet light with a wavelength shorter than 290 nm for several days. Use F40 BL or equivalent lamps. Analyze liquid wastes, and dispose of the solutions when the CDDs/CDFs can no longer be detected.

20.5 For further information on waste management, consult ''The Waste Management Manual for Laboratory Personnel'' and ''Less is Better—Laboratory Chemical Management for Waste Reduction,'' available from the American Chemical Society's Department of Government Relations and Science Policy, 1155 16th Street N.W., Washington, D.C. 20036.

21.0 Method Performance

Method performance was validated and performance specifications were developed using data from EPA's international interlaboratory validation study (References 30–31) and the EPA/paper industry Long-Term Variability Study of discharges from the pulp and paper industry (58 FR 66078).

22.0 References

1. Tondeur, Yves. ''Method 8290: Analytical Procedures and Quality Assurance for Multimedia Analysis of Polychlorinated Dibenzo-*p*-dioxins and Dibenzofurans by High Resolution Gas Chromatography/High Resolution Mass Spectrometry,'' USEPA EMSL, Las Vegas, Nevada, June 1987.

2. ''Measurement of 2,3,7,8-Tetrachlorinated Dibenzo-*p*-dioxin (TCDD) and 2,3,7,8-Tetrachlorinated Dibenzofuran (TCDF) in Pulp, Sludges, Process Samples and Wastewaters from Pulp and Paper Mills,'' Wright State University, Dayton, OH 45435, June 1988.

3. ''NCASI Procedures for the Preparation and Isomer Specific Analysis of Pulp and Paper Industry Samples for 2,3,7,8-TCDD and 2,3,7,8-TCDF,'' National Council of the Paper Industry for Air and Stream Improvement Inc., 260 Madison Avenue, New York, NY 10016, Technical Bulletin No. 551, Pre-Release Copy, July 1988.

4. ''Analytical Procedures and Quality Assurance Plan for the Determination of PCDD/PCDF in Fish,'' USEPA, Environmental Research Laboratory, 6201 Congdon Boulevard, Duluth, MN 55804, April 1988.

5. Tondeur, Yves. ''Proposed GC/MS Methodology for the Analysis of PCDDs and PCDFs in Special Analytical Services Samples,'' Triangle Laboratories, Inc., 801–10 Capitola Dr, Research Triangle Park, NC 27713, January 1988; updated by personal communication September 1988.

6. Lamparski, L.L. and Nestrick, T.J. ''Determination of Tetra-, Hexa-, Hepta-, and Octachlorodibenzo-*p*-dioxin Isomers in Particulate Samples at Parts per Trillion Levels,'' Analytical Chemistry, 52: 2045–2054, 1980.

7. Lamparski, L.L. and Nestrick, T.J. ''Novel Extraction Device for the Determination of Chlorinated Dibenzo-*p*-dioxins (PCDDs) and Dibenzofurans (PCDFs) in Matrices Containing Water,'' Chemosphere, 19:27–31, 1989.

8. Patterson, D.G., et. al. ''Control of Interferences in the Analysis of Human Adipose Tissue for 2,3,7,8-Tetrachlorodibenzo-*p*-

dioxin,'' Environmental Toxicological Chemistry, 5:355–360, 1986.

9. Stanley, John S. and Sack, Thomas M. ''Protocol for the Analysis of 2,3,7,8-Tetrachlorodibenzo-*p*-dioxin by High Resolution Gas Chromatography/High Resolution Mass Spectrometry,'' USEPA EMSL, Las Vegas, Nevada 89114, EPA 600/4–86–004, January 1986.

10. ''Working with Carcinogens,'' Department of Health, Education, & Welfare, Public Health Service, Centers for Disease Control, NIOSH, Publication 77–206, August 1977, NTIS PB–277256.

11. ''OSHA Safety and Health Standards, General Industry,'' OSHA 2206, 29 CFR 1910.

12. ''Safety in Academic Chemistry Laboratories,'' ACS Committee on Chemical Safety, 1979.

13. ''Standard Methods for the Examination of Water and Wastewater,'' 18th edition and later revisions, American Public Health Association, 1015 15th St, N.W., Washington, DC 20005, 1–35: Section 1090 (Safety), 1992.

14. ''Method 613—2,3,7,8-Tetrachlorodibenzo-p-dioxin,'' 40 CFR 136 (49 FR 43234), October 26, 1984, Section 4.1.

15. Provost, L.P. and Elder, R.S. ''Interpretation of Percent Recovery Data,'' American Laboratory, 15: 56–83, 1983.

16. ''Standard Practice for Sampling Water,'' ASTM Annual Book of Standards, ASTM, 1916 Race Street, Philadelphia, PA 19103–1187, 1980.

17. ''Methods 330.4 and 330.5 for Total Residual Chlorine,'' USEPA, EMSL, Cincinnati, OH 45268, EPA 600/4–79–020, March 1979.

18. ''Handbook of Analytical Quality Control in Water and Wastewater Laboratories,'' USEPA EMSL, Cincinnati, OH 45268, EPA–600/4–79–019, March 1979.

19. Williams, Rick. Letter to Bill Telliard, June 4, 1993, available from the EPA Sample Control Center operated by DynCorp Viar, Inc., 300 N Lee St, Alexandria, VA 22314, 703–519–1140.

20. Barkowski, Sarah. Fax to Sue Price, August 6, 1992, available from the EPA Sample Control Center operated by DynCorp Viar, Inc., 300 N Lee St, Alexandria VA 22314, 703–519–1140.

21. ''Analysis of Multi-media, Multi-concentration Samples for Dioxins and Furans, PCDD/PCDF Analyses Data Package'', Narrative for Episode 4419, MRI Project No. 3091-A, op.cit. February 12, 1993, Available from the EPA Sample Control Center operated by DynCorp Viar Inc, 300 N Lee St, Alexandria, VA 22314 (703–519–1140).

22. ''Analytical Procedures and Quality Assurance Plan for the Determination of PCDD/PCDF in Fish'', U.S. Environmental Protection Agency, Environmental Research Laboratory, Duluth, MN 55804, EPA/600/3–90/022, March 1990.

23. Afghan, B.K., Carron, J., Goulden, P.D., Lawrence, J., Leger, D., Onuska, F., Sherry, J., and Wilkenson, R.J., ''Recent Advances in Ultratrace Analysis of Dioxins and Related Halogenated Hydrocarbons'', Can J. Chem., 65: 1086–1097, 1987.

24. Sherry, J.P. and Tse, H. ''A Procedure for the Determination of Polychlorinated Dibenzo-p-dioxins in Fish'', Chemosphere, 20: 865–872, 1990.

25. ''Preliminary Fish Tissue Study'', Results of Episode 4419, available from the EPA Sample Control Center operated by DynCorp Viar, Inc., 300 N Lee St, Alexandria, VA 22314, 703–519–1140.

26. Nestrick, Terry L. DOW Chemical Co., personal communication with D.R. Rushneck, April 8, 1993. Details available from the U.S. Environmental Protection Agency Sample Control Center operated by DynCorp Viar Inc, 300 N Lee St, Alexandria, VA 22314, 703–519–1140.

27. Barnstadt, Michael. ''Big Fish Column'', Triangle Laboratories of RTP, Inc., SOP 129–90, 27 March 27, 1992.

28. ''Determination of Polychlorinated Dibenzo-p-Dioxins (PCDD) and Dibenzofurans (PCDF) in Environmental Samples Using EPA Method 1613'', Chemical Sciences Department, Midwest Research Institute, 425 Volker Boulevard, Kansas City, MO 44110–2299, Standard Operating Procedure No. CS–153, January 15, 1992.

29. Ryan, John J. Raymonde Lizotte and William H. Newsome, J. Chromatog. 303 (1984) 351-360.

30. Telliard, William A., McCarty, Harry B., and Riddick, Lynn S. ''Results of the Interlaboratory Validation Study of USEPA Method 1613 for the Analysis of Tetra- through Octachlorinated Dioxins and Furans by Isotope Dilution GC/MS,'' Chemosphere, 27, 41–46 (1993).

31. ''Results of the International Interlaboratory Validation Study of USEPA Method 1613'', October 1994, available from the EPA Sample Control Center operated by DynCorp Viar, Inc., 300 N Lee St, Alexandria, VA 22314, 703–519–1140.

23.0 Tables and Figures

TABLE 1—CHLORINATED DIBENZO-P-DIOXINS AND FURANS DETERMINED BY ISOTOPE DILUTION AND INTERNAL STANDARD HIGH RESOLUTION GAS CHROMATOGRAPHY (HRGC)/HIGH RESOLUTION MASS SPECTROMETRY (HRMS)

CDDs/CDFs [1]	CAS registry	Labeled analog	CAS registry
2,3,7,8-TCDD	1746–01–6	$^{13}C_{12}$-2,3,7,8-TCDD	76523–40–5
		$^{37}Cl_4$-2,3,7,8-TCDD	85508–50–5
Total TCDD	41903–57–5		
2,3,7,8-TCDF	51207–31–9	$^{13}C_{12}$-2,3,7,8-TCDF	89059–46–1
Total-TCDF	55722–27–5		
1,2,3,7,8-PeCDD	40321–76–4	$^{13}C_{12}$-1,2,3,7,8-PeCDD	109719–79–1
Total-PeCDD	36088–22–9		
1,2,3,7,8-PeCDF	57117–41–6	$^{13}C_{12}$-1,2,3,7,8-PeCDF	109719–77–9
2,3,4,7,8-PeCDF	57117–31–4	$^{13}C_{12}$-2,3,4,7,8-PeCDF	116843–02–8
Total-PeCDF	30402–15–4		
1,2,3,4,7,8-HxCDD	39227–28–6	$^{13}C_{12}$-1,2,3,4,7,8-HxCDD	109719–80–4
1,2,3,6,7,8-HxCDD	57653–85–7	$^{13}C_{12}$-1,2,3,6,7,8-HxCDD	109719–81–5
1,2,3,7,8,9-HxCDD	19408–74–3	$^{13}C_{12}$-1,2,3,7,8,9-HxCDD	109719–82–6
Total-HxCDD	34465–46–8		
1,2,3,4,7,8-HxCDF	70648–26–9	$^{13}C_{12}$-1,2,3,4,7,8-HxCDF	114423–98–2
1,2,3,6,7,8-HxCDF	57117–44–9	$^{13}C_{12}$-1,2,3,6,7,8-HxCDF	116843–03–9
1,2,3,7,8,9-HxCDF	72918–21–9	$^{13}C_{12}$-1,2,3,7,8,9-HxCDF	116843–04–0
2,3,4,6,7,8-HxCDF	60851–34–5	$^{13}C_{12}$-2,3,4,6,7,8-HxCDF	116843–05–1
Total-HxCDF	55684–94–1		
1,2,3,4,6,7,8-HpCDD	35822–46–9	$^{13}C_{12}$-1,2,3,4,6,7,8-HpCDD	109719–83–7
Total-HpCDD	37871–00–4		
1,2,3,4,6,7,8-HpCDF	67562–39–4	$^{13}C_{12}$-1,2,3,4,6,7,8-HpCDF	109719–84–8
1,2,3,4,7,8,9-HpCDF	55673–89–7	$^{13}C_{12}$-1,2,3,4,7,8,9-HpCDF	109719–94–0
Total-HpCDF	38998–75–3		
OCDD	3268–87–9	$^{13}C_{12}$-OCDD	114423–97–1
OCDF	39001–02–0	Not used.	

[1] Chlorinated dibenzo-p-dioxins and chlorinated dibenzofurans.
TCDD = Tetrachlorodibenzo-p-dioxin.
TCDF = Tetrachlorodibenzofuran.
PeCDD = Pentachlorodibenzo-p-dioxin.
PeCDF = Pentachlorodibenzofuran.
HxCDD = Hexachlorodibenzo-p-dioxin.
HxCDF = Hexachlorodibenzofuran.
HpCDD = Heptachlorodibenzo-p-dioxin.
HpCDF = Heptachlorodibenzofuran.
OCDD = Octachlorodibenzo-p-dioxin.
OCDF = Octachlorodibenzofuran.

TABLE 2—RETENTION TIME REFERENCES, QUANTITATION REFERENCES, RELATIVE RETENTION TIMES, AND MINIMUM LEVELS FOR CDDS AND DCFS

CDD/CDF	Retention time and quantitation reference	Relative retention time	Minimum level [1]		
			Water (pg/L; ppq)	Solid (ng/kg; ppt)	Extract (pg/µL; ppb)
Compounds using ^{13}C12–1,2,3,4-TCDD as the Injection Internal Standard					
2,3,7,8-TCDF	$^{13}C_{12}$-2,3,7,8-TCDF	0.999–1.003	10	1	0.5
2,3,7,8-TCDD	$^{13}C_{12}$-2,3,7,8-TCDD	0.999–1.002	10	1	0.5
1,2,3,7,8-Pe	$^{13}C_{12}$-1,2,3,7,8-PeCDF	0.999–1.002	50	5	2.5
2,3,4,7,8-PeCDF	$^{13}C_{12}$-2,3,4,7,8-PeCDF	0.999–1.002	50	5	2.5
1,2,3,7,8-PeCDD	$^{13}C_{12}$-1,2,3,7,8-PeCDD	0.999–1.002	50	5	2.5
$^{13}C_{12}$-2,3,7,8-TCDF	$^{13}C_{12}$-1,2,3,4-TCDD	0.923–1.103			
$^{13}C_{12}$-2,3,7,8-TCDD	$^{13}C_{12}$-1,2,3,4-TCDD	0.976–1.043			
$^{13}C_{12}$-2,3,7,8-TCDD	$^{13}C_{12}$-1,2,3,4-TCDD	0.989–1.052			
$^{13}C_{12}$-1,2,3,7,8-PeCDF	$^{13}C_{12}$-1,2,3,4-TCDD	1.000–1.425			
$^{13}C_{12}$-2,3,4,7,8-PeCDF	$^{13}C_{12}$-1,2,3,4-TCDD	1.001–1.526			
$^{13}C_{12}$-1,2,3,7,8-PeCDF	$^{13}C_{12}$-1,2,3,4-TCDD	1.000–1.567			
Compounds using ^{13}C12–1,2,3,7,8,9-HxCDD as the Injection Internal Standard					
1,2,3,4,7,8-HxCDF	$^{13}C_{12}$-1,2,3,4,7,8-HxCDF	0.999–1.001	50	5	2.5
1,2,3,6,7,8-HxCDF	$^{13}C_{12}$-1,2,3,6,7,8-HxCDF	0.997–1.005	50	5	2.5
1,2,3,7,8,9-HxCDF	$^{13}C_{12}$-1,2,3,7,8,9-HxCDF	0.999–1.001	50	5	2.5
2,3,4,6,7,8-HxCDF	$^{13}C_{12}$-2,3,4,6,7,8-HxCDF	0.999–1.001	50	5	2.5
1,2,3,4,7,8-HxCDD	$^{13}C_{12}$-1,2,3,4,7,8-HxCDD	0.999–1.001	50	5	2.5
1,2,3,6,7,8-HxCDD	$^{13}C_{12}$-1,2,3,6,7,8-HxCDD	0.998–1.004	50	5	2.5
1,2,3,7,8,9-HxCDD	([2])	1.000–1.019	50	5	2.5
1,2,3,4,6,7,8-HpCDF	$^{13}C_{12}$-1,2,3,4,6,7,8-HpCDF	0.999–1.001	50	5	2.5

TABLE 2—RETENTION TIME REFERENCES, QUANTITATION REFERENCES, RELATIVE RETENTION TIMES, AND MINIMUM LEVELS FOR CDDS AND DCFS—Continued

CDD/CDF	Retention time and quantitation reference	Relative retention time	Minimum level [1]		
			Water (pg/L; ppq)	Solid (ng/kg; ppt)	Extract (pg/µL; ppb)
1,2,3,4,7,8,9-HpCDF	$^{13}C_{12}$-1,2,3,4,7,8,9-HpCDF	0.999–1.001	50	5	2.5
1,2,3,4,6,7,8-HpCDD	$^{13}C_{12}$-1,2,3,4,6,7,8-HpCDD	0.999–1.001	50	5	2.5
OCDF	$^{13}C_{12}$-OCDD	0.999–1.001	100	10	5.0
OCDD	$^{13}C_{12}$-OCDD	0.999–1.001	100	10	5.0
1,2,3,4,6,7,8,-HxCDF	$^{13}C_{12}$-1,2,3,7,8,9-HpCDD	0.949–0.975			
$^{13}C_{12}$1,2,3,7,8,9-HxCDF	$^{13}C_{12}$-1,2,3,7,8,9-HpCDD	0.977–1.047			
$^{13}C_{12}$2,3,4,6,7,8,-HxCDF	$^{13}C_{12}$-1,2,3,7,8,9-HpCDD	0.959–1.021			
$^{13}C_{12}$1,2,3,4,7,8,-HxCDF	$^{13}C_{12}$-1,2,3,7,8,9-HpCDD	0.977–1.000			
$^{13}C_{12}$1,2,3,6,7,8,-HxCDF	$^{13}C_{12}$-1,2,3,7,8,9-HpCDD	0.981–1.003			
$^{13}C_{12}$1,2,3,4,6,7,8-HxCDF	$^{13}C_{12}$-1,2,3,7,8,9-HpCDD	1.043–1.085			
$^{13}C_{12}$1,2,3,4,7,8,9-HxCDF	$^{13}C_{12}$-1,2,3,7,8,9-HpCDD	1.057–1.151			
$^{13}C_{12}$1,2,3,4,6,7,8-HxCDF	$^{13}C_{12}$-1,2,3,7,8,9-HpCDD	1.086–1.110			
$^{13}C_{12}$OCDD	$^{13}C_{12}$-1,2,3,7,8,9-HpCDD	1.032–1.311			

[1] The Minimum Level (ML) for each analyte is defined as the level at which the entire analytical system must give a recognizable signal and acceptable calibration point. It is equivalent to the concentration of the lowest calibration standard, assuming that all method-specified sample weights, volumes, and cleanup procedures have been employed.

[2] The retention time reference for 1,2,3,7,8,9-HxCDD is $^{13}C_{12}$-1,2,3,6,7,8-HxCDD, and 1,2,3,7,8,9-HxCDD is quantified using the averaged responses for $^{13}C_{12}$-1,2,3,4,7,8-HxCDD and $^{13}C_{12}$-1,2,3,6,7,8-HxCDD.

TABLE 3—CONCENTRATION OF STOCK AND SPIKING SOLUTIONS CONTAINING CDDS/CDFS AND LABELED COMPOUNDS

CDD/CDF	Labeled compound stock solution [1] (ng/mL)	Labeled compound spiking solution [2] (ng/mL)	PAR stock solution [3] (ng/mL)	PAR spiking solution [4] (ng/mL)
2,3,7,8-TCDD			40	0.8
2,3,7,8-TCDF			40	0.8
1,2,3,7,8-PeCDD			200	4
1,2,3,7,8-PeCDF			200	4
2,3,4,7,8-PeCDF			200	4
1,2,3,4,7,8-HxCDD			200	4
1,2,3,6,7,8-HxCDD			200	4
1,2,3,7,8,9-HxCDD			200	4
1,2,3,4,7,8-HxCDF			200	4
1,2,3,6,7,8-HxCDF			200	4
1,2,3,7,8,9-HxCDF			200	4
2,3,4,6,7,8-HxCDF			200	4
1,2,3,4,6,7,8-HpCDD			200	4
1,2,3,4,6,7,8-HpCDF			200	4
1,2,3,4,7,8,9-HpCDF			200	4
OCDD			400	8
OCDF			400	8
$^{13}C_{12}$-2,3,7,8-TCDD	100	2		
$^{13}C_{12}$-2,3,7,8-TCDF	100	2		
$^{13}C_{12}$-1,2,3,7,8-PeCDD	100	2		
$^{13}C_{12}$-1,2,3,7,8-PeCDF	100	2		
$^{13}C_{12}$-2,3,4,7,8-PeCDF	100	2		
$^{13}C_{12}$-1,2,3,4,7,8-HxCDD	100	2		
$^{13}C_{12}$-1,2,3,6,7,8-HxCDD	100	2		
$^{13}C_{12}$-1,2,3,4,7,8-HxCDF	100	2		
$^{13}C_{12}$-1,2,3,6,7,8-HxCDF	100	2		
$^{13}C_{12}$-1,2,3,7,8,9-HxCDF	100	2		
$^{13}C_{12}$-2,3,4,6,7,8-HxCDF	100	2		
$^{13}C_{12}$-1,2,3,4,6,7,8-HpCDD	100	2		
$^{13}C_{12}$-1,2,3,4,6,7,8-HpCDF	100	2		
$^{13}C_{12}$-1,2,3,4,7,8,9-HpCDF	100	2		
$^{13}C_{12}$-OCDD	200	4		
Cleanup Standard [5]				
$^{37}Cl_4$-2,3,7,8-TCDD	0.8			
Internal Standards [6]				
$^{13}C_{12}$-1,2,3,4-TCDD	200			
$^{13}C_{12}$-1,2,3,7,8,9-HxCDD	200			

[1] Section 7.10—prepared in nonane and diluted to prepare spiking solution.

[2] Section 7.10.3—prepared in acetone from stock solution daily.

[3] Section 7.9—prepared in nonane and diluted to prepare spiking solution.
[4] Section 7.14—prepared in acetone from stock solution daily.
[5] Section 7.11—prepared in nonane and added to extract prior to cleanup.
[6] Section 7.12—prepared in nonane and added to the concentrated extract immediately prior to injection into the GC (Section 14.2).

TABLE 4—CONCENTRATION OF CDDS/CDFS IN CALIBRATION AND CALIBRATION VERIFICATION SOLUTIONS[1] (SECTION 15.3)

CDD/CDF	CS2 (ng/mL)	CS3 (ng/mL)	CS4 (ng/mL)	CS5 (ng/mL)
2,3,7,8-TCDD	0.5	2	10	40	200
2,3,7,8-TCDF	0.5	2	10	40	200
1,2,3,7,8-PeCDD	2.5	10	50	200	1000
1,2,3,7,8-PeCDF	2.5	10	50	200	1000
2,3,4,7,8-PeCDF	2.5	10	50	200	1000
1,2,3,4,7,8-HxCDD	2.5	10	50	200	1000
1,2,3,6,7,8-HxCDD	2.5	10	50	200	1000
1,2,3,7,8,9-HxCDD	2.5	10	50	200	1000
1,2,3,4,7,8-HxCDF	2.5	10	50	200	1000
1,2,3,6,7,8-HxCDF	2.5	10	50	200	1000
1,2,3,7,8,9-HxCDF	2.5	10	50	200	1000
2,3,4,6,7,8-HxCDF	2.5	10	50	200	1000
1,2,3,4,6,7,8-HpCDD	2.5	10	50	200	1000
1,2,3,4,6,7,8-HpCDF	2.5	10	50	200	1000
1,2,3,4,7,8,9-HpCDF	2.5	10	50	200	1000
OCDD	5.0	20	100	400	2000
OCDF	5.0	20	100	400	2000
$^{13}C_{12}$-2,3,7,8-TCDD	100	100	100	100	100
$^{13}C_{12}$-2,3,7,8-TCDF	100	100	100	100	100
$^{13}C_{12}$-1,2,3,7,8-PeCDD	100	100	100	100	100
$^{13}C_{12}$-PeCDF	100	100	100	100	100
$^{13}C_{12}$-2,3,4,7,8-PeCDF	100	100	100	100	100
$^{13}C_{12}$-1,2,3,4,7,8-HxCDD	100	100	100	100	100
$^{13}C_{12}$-1,2,3,6,7,8-HxCDD	100	100	100	100	100
$^{13}C_{12}$-1,2,3,4,7,8-HxCDF	100	100	100	100	100
$^{13}C_{12}$-1,2,3,6,7,8-HxCDF	100	100	100	100	100
$^{13}C_{12}$-1,2,3,7,8,9-HxCDF	100	100	100	100	100
$^{13}C_{12}$-1,2,3,4,6,7,8-HpCDD	100	100	100	100	100
$^{13}C_{12}$-1,2,3,4,6,7,8-HpCDF	100	100	100	100	100
$^{13}C_{12}$-1,2,3,4,7,8,9-Hp CDF	100	100	100	100	100
$^{13}C_{12}$-OCDD	200	200	200	200	200
Cleanup Standard:					
$^{37}C1_4$-2,3,7,8-TCDD	0.5	2	10	40	200
Internal Standards:					
$^{13}C_{12}$-1,2,3,4-TCDD	100	100	100	100	100
$^{13}C_{12}$-1,2,3,7,8,9-HxCDD	100	100	100	100	100

TABLE 5—GC RETENTION TIME WINDOW DEFINING SOLUTION AND ISOMER SPECIFICITY TEST STANDARD (SECTION 7.15)

DB–5 column GC retention-time window defining solution		
CDD/CDF	First eluted	Last eluted
TCDF	1,3,6,8-	1,2,8,9-
TCDD	1,3,6,8-	1,2,8,9-
PeCDF	1,3,4,6,8-	1,2,3,8,9-
PeCDD	1,2,4,7,9-	1,2,3,8,9-
HxCDF	1,2,3,4,6,8-	1,2,3,4,8,9-
HxCDD	1,2,4,6,7,9-	1,2,3,4,6,7-
HpCDF	1,2,3,4,6,7,8-	1,2,3,4,7,8,9-
HpCDD	1,2,3,4,6,7,9-	1,2,3,4,6,7,8-

DB–5 Column TCDD Specificity Test Standard

1,2,3,7 = 1,2,3,8-TCDD
2,3,7,8-TCDD
1,2,3,9-TCDD

DB–225 Column TCDF Isomer Specificity Test Standard

2,3,4,7-TCDF
2,3,7,8-TCDF
1,2,3,9-TCDF

TABLE 6—ACCEPTANCE CRITERIA FOR PERFORMANCE TESTS WHEN ALL CDDS/CDFS ARE TESTED [1]

CDD/CDF	Test conc. (ng/mL)	IPR [2 3]		OPR (ng/mL)	VER (ng/mL)
		s (ng/mL)	X (ng/mL)		
2,3,7,8-TCDD	10	2.8	8.3–12.9	6.7–15.8	7.8–12.9
2,3,7,8-TCDF	10	2.0	8.7–13.7	7.5–15.8	8.4–12.0
1,2,3,7,8-PeCDD	50	7.5	38–66	35–71	39–65
1,2,3,7,8-PeCDF	50	7.5	43–62	40–67	41–60
2,3,4,7,8-PeCDF	50	8.6	36–75	34–80	41–61
1,2,3,4,7,8-HxCDD	50	9.4	39–76	35–82	39–64
1,2,3,6,7,8-HxCDD	50	7.7	42–62	38–67	39–64
1,2,3,7,8,9-HxCDD	50	11.1	37–71	32–81	41–61
1,2,3,4,7,8-HxCDF	50	8.7	41–59	36–67	45–56
1,2,3,6,7,8-HxCDF	50	6.7	46–60	42–65	44–57
1,2,3,7,8,9-HxCDF	50	6.4	42–61	39–65	45–56
2,3,4,6,7,8-HxCDF	50	7.4	37–74	35–78	44–57
1,2,3,4,6,7,8-HpCDD	50	7.7	38–65	35–70	43–58
1,2,3,4,6,7,8-HpCDF	50	6.3	45–56	41–61	45–55
1,2,3,4,7,8,9-HpCDF	50	8.1	43–63	39–69	43–58
OCDD	100	19	89–127	78–144	79–126
OCDF	100	27	74–146	63–170	63–159
$^{13}C_{12}$-2,3,7,8-TCDD	100	37	28–134	20–175	82–121
$^{13}C_{12}$-2,3,7,8-TCDF	100	35	31–113	22–152	71–140
$^{13}C_{12}$-1,2,3,7,8-PeCDD	100	39	27–184	21–227	62–160
$^{13}C_{12}$-1,2,3,7,8-PeCDF	100	34	27–156	21–192	76–130
$^{13}C_{12}$-2,3,4,7,8-PeCDF	100	38	16–279	13–328	77–130
$^{13}C_{12}$-1,2,3,4,7,8-HxCDD	100	41	29–147	21–193	85–117
$^{13}C_{12}$-1,2,3,6,7,8-HxCDD	100	38	34–122	25–163	85–118
$^{13}C_{12}$-1,2,3,4,7,8-HxCDF	100	43	27–152	19–202	76–131
$^{13}C_{12}$-1,2,3,6,7,8-HxCDF	100	35	30–122	21–159	70–143
$^{13}C_{12}$-1,2,3,7,8,9-HxCDF	100	40	24–157	17–205	74–135
$^{13}C_{12}$-2,3,4,6,7,8,-HxCDF	100	37	29–136	22–176	73–137
$^{13}C_{12}$-1,2,3,4,6,7,8-HpCDD	100	35	34–129	26–166	72–138
$^{13}C_{12}$-1,2,3,4,6,7,8-HpCDF	100	41	32–110	21–158	78–129
$^{13}C_{12}$-1,2,3,4,7,8,9-HpCDF	100	40	28–141	20–186	77–129
$^{13}C_{12}$-OCDD	200	95	41–276	26–397	96–415
$^{37}Cl_4$-2,3,7,8-TCDD	10	3.6	3.9–15.4	3.1–19.1	7.9–12.7

[1] All specifications are given as concentration in the final extract, assuming a 20 μL volume.
[2] s = standard deviation of the concentration.
[3] X = average concentration.

TABLE 6A—ACCEPTANCE CRITERIA FOR PERFORMANCE TESTS WHEN ONLY TETRA COMPOUNDS ARE TESTED [1]

CDD/CDF	Test Conc. (ng/mL)	IPR [2 3]		OPR (ng/mL)	VER (ng/mL)
		s (ng/mL)	X (ng/mL)		
2,3,7,8-TCDD	10	2.7	8.7–12.4	7.314.6	8.2–12.3
2,3,7,8-TCDF	10	2.0	9.1–13.1	8.0–14.7	8.6–11.6
$^{13}C_{12}$-2,3,7,8-TCDD	100	35	32–115	25–141	85–117
$^{13}C_{12}$-2,3,7,8-TCDF	100	34	35–99	26–126	76–131
$^{37}C_{14}$-2,3,7,8-TCDD	10	3.4	4.5–13.4	3.7–15.8	8.3–12.1

[1] All specifications are given as concentration in the final extract, assuming a 20 μL volume.
[2] s = standard deviation of the concentration.
[3] X = average concentration.

TABLE 7—LABELED COMPOUNDS RECOVERY IN SAMPLES WHEN ALL CDDS/CDFS ARE TESTED

Compound	Test conc. (ng/mL)	Labeled compound recovery	
		(ng/mL) [1]	(%)
$^{13}C_{12}$-2,3,7,8-TCDD	100	25–164	25–164
$^{13}C_{12}$-2,3,7,8-TCDF	100	24–169	24–169
$^{13}C_{12}$-1,2,3,7,8-PeCDD	100	25–181	25–181
$^{13}C_{12}$-1,2,3,7,8-PeCDF	100	24–185	24–185
$^{13}C_{12}$-2,3,4,7,8-PeCDF	100	21–178	21–178
$^{13}C_{12}$-1,2,3,4,7,8-HxCDD	100	32–141	32–141
$^{13}C_{12}$-1,2,3,6,7,8-HxCDD	100	28–130	28–130
$^{13}C_{12}$-1,2,3,4,7,8-HxCDF	100	26–152	26–152
$^{13}C_{12}$-1,2,3,6,7,8-HxCDF	100	26–123	26–123

TABLE 7—LABELED COMPOUNDS RECOVERY IN SAMPLES WHEN ALL CDDS/CDFS ARE TESTED—Continued

Compound	Test conc. (ng/mL)	Labeled compound recovery	
		(ng/mL) [1]	(%)
$^{13}C_{12}$-1,2,3,7,8,9-HxCDF	100	29–147	29–147
$^{13}C_{12}$-2,3,4,6,7,8-HxCDF	100	28–136	28–136
$^{13}C_{12}$-1,2,3,4,6,7,8-HpCDD	100	23–140	23–140
$^{13}C_{12}$-1,2,3,4,6,7,8-HpCDF	100	28–143	28–143
$^{13}C_{12}$-1,2,3,4,7,8,9-HpCDF	100	26–138	26–138
$^{13}C_{12}$-OCDD	200	34-313	17–157
$^{37}Cl_4$-2,3,7,8-TCDD	10	3.5–19.7	35–197

[1] Specification given as concentration in the final extract, assuming a 20-μL volume.

TABLE 7A—LABELED COMPOUND RECOVERY IN SAMPLES WHEN ONLY TETRA COMPOUNDS ARE TESTED

Compound	Test conc. (ng/mL)	Labeled compound recovery	
		(ng/mL) [1]	(%)
$^{13}C_{12}$-2,3,7,8-TCDD	100	31–137	31–137
$^{13}C_{12}$-2,3,7,8-TCDF	100	29–140	29–140
$^{37}Cl_4$-2,3,7,8-TCDD	10	4.2–16.4	42–164

[1] Specification given as concentration in the final extract, assuming a 20 μL volume.

TABLE 8—DESCRIPTORS, EXACT M/Z'S, M/Z TYPES, AND ELEMENTAL COMPOSITIONS OF THE CDDS AND CDFS

Descriptor	Exact M/Z [1]	M/Z type	Elemental composition	Substance [2]
1	292.9825	Lock	C_7F_{11}	PFK
	303.9016	M	$C_{12}H_4{}^{35}Cl_4O$	TCDF
	305.8987	M = 2	$C_{12}H_4{}^{35}Cl_3{}^{37}ClO$	TCDF
	315.9419	M	$^{13}C_{12}H_4{}^{35}Cl_4O$	TCDF [3]
	317.9389	M = 2	$^{13}C_{12}H_4{}^{35}Cl_3{}^{37}ClO$	TCDF [3]
	319.8965	M	$C_{12}H_4{}^{35}Cl_4O_2$	TCDD
	321.8936	M = 2	$C_{12}H_4{}^{35}Cl_3{}^{37}ClO_2$	TCDD
	327.8847	M	$C_{12}H_4{}^{37}Cl_4O_2$	TCDD [4]
	330.9792	QC	C_7F_{13}	PFK
	331.9368	M	$^{13}C_{12}H_4{}^{35}Cl_4O_2$	TCDD [3]
	333.9339	M = 2	$^{13}C_{12}H_4{}^{35}Cl_3{}^{37}ClO_2$	TCDD [3]
	375.8364	M = 2	$C_{12}H_4{}^{35}Cl_5{}^{37}ClO$	HxCDPE
2	339.8597	M = 2	$C_{12}H_3{}^{35}Cl_4{}^{37}ClO$	PeCDF
	341.8567	M = 4	$C_{12}H_3{}^{35}Cl_3{}^{37}Cl_2O$	PeCDF
	351.9000	M = 2	$^{13}C_{12}H_3{}^{35}Cl_4{}^{37}ClO$	PeCDF
	353.8970	M = 4	$^{13}C_{12}H_3{}^{35}Cl_3{}^{37}Cl_2O$	PeCDF [3]
	354.9792	Lock	C_9F_{13}	PFK
	355.8546	M = 2	$C_{12}H_3{}^{35}Cl_4{}^{37}ClO_2$	PeCDD
	357.8516	M = 4	$C_{12}H_3{}^{35}Cl_3{}^{37}Cl_2O_2$	PeCDD
	367.8949	M = 2	$^{13}C_{12}H_3{}^{35}Cl_4{}^{37}ClO_2$	PeCDD [3]
	369.8919	M = 4	$^{13}C_{12}H_3{}^{35}Cl_3{}^{37}Cl_2O_2$	PeCDD [3]
	409.7974	M = 2	$C_{12}H_3{}^{35}Cl_6{}^{37}ClO$	HpCDPE
3	373.8208	M = 2	$C_{12}H_2{}^{35}Cl_5{}^{37}ClO$	HxCDF
	375.8178	M = 4	$C_{12}H_2{}^{35}Cl_4{}^{37}Cl_2O$	HxCDF
	383.8639	M	$^{13}C_{12}H_2{}^{35}Cl_6O$	HxCDF [3]
	385.8610	M = 2	$^{13}C_{12}H_2{}^{35}Cl_5{}^{37}ClO$	HxCDF [3]
	389.8157	M = 2	$C_{12}H_2{}^{35}Cl_5{}^{37}ClO_2$	HxCDD
	391.8127	M = 4	$C_{12}H_2{}^{35}Cl_4{}^{37}Cl_2O_2$	HxCDD
	392.9760	Lock	C_9F_{15}	PFK
	401.8559	M = 2	$^{13}C_{12}H_2{}^{35}Cl_5{}^{37}ClO_2$	HxCDD [3]
	403.8529	M = 4	$^{13}C_{12}H_2{}^{35}Cl_4{}^{37}Cl_2O_2$	HxCDD [3]
	430.9729	QC	C_9F_{17}	PFK
	445.7555	M = 4	$C_{12}H_2{}^{35}Cl_6{}^{37}Cl_2O$	OCDPE
4	407.7818	M = 2	$C_{12}H^{35}Cl_6{}^{37}ClO$	HpCDF
	409.7789	M = 4	$C_{12}H^{35}Cl_5{}^{37}Cl_2O$	HpCDF
	417.8253	M	$^{13}C_{12}H^{35}Cl_7O$	HpCDF [3]
	419.8220	M = 2	$^{13}C_{12}H^{35}Cl_6{}^{37}ClO$	HpCDF [3]
	423.7766	M = 2	$C_{12}H^{35}Cl_6{}^{37}ClO_2$	HpCDD
	425.7737	M = 4	$C_{12}H^{35}Cl_5{}^{37}Cl_2O_2$	HpCDD

TABLE 8—DESCRIPTORS, EXACT M/Z'S, M/Z TYPES, AND ELEMENTAL COMPOSITIONS OF THE CDDS AND CDFS—Continued

Descriptor	Exact M/Z [1]	M/Z type	Elemental composition	Substance [2]
	430.9729	Lock	C_9F_{17}	PFK
	435.8169	M = 2	$^{13}C_{12}H^{35}Cl_6{}^{37}ClO_2$	HpCDD [3]
	437.8140	M = 4	$^{13}C_{12}H^{35}Cl_5{}^{37}Cl_2O_2$	HpCDD [3]
	479.7165	M = 4	$C_{12}H^{35}Cl_7{}^{37}Cl_2O$	NCDPE
5	441.7428	M = 2	$C_{12}{}^{35}Cl_7{}^{37}ClO$	OCDF
	442.9728	Lock	$C_{10}F_{17}$	PFK
	443.7399	M = 4	$C_{12}{}^{35}Cl_6{}^{37}Cl_2O$	OCDF
	457.7377	M = 2	$C_{12}{}^{35}Cl_7{}^{37}ClO_2$	OCDD
	459.7348	M = 4	$C_{12}{}^{35}Cl_6{}^{37}Cl_2O_2$	OCDD
	469.7779	M = 2	$^{13}C_{12}{}^{35}Cl_7{}^{37}ClO_2$	OCDD [3]
	471.7750	M = 4	$^{13}C_{12}{}^{35}Cl_6{}^{37}Cl_2O_2$	OCDD [3]
	513.6775	M = 4	$C_{12}{}^{35}Cl_8{}^{37}Cl_2O$	DCDPE

[1] Nuclidic masses used:
H = 1.007825.
O = 15.994915.
C = 12.00000.
^{35}Cl = 34.968853.
^{13}C = 13.003355.
^{37}Cl = 36.965903.
F = 18.9984.

[2] TCDD = Tetrachlorodibenzo-p-dioxin.
PeCDD = Pentachlorodibenzo-p-dioxin.
HxCDD = Hexachlorodibenzo-p-dioxin.
HpCDD = Heptachlorodibenzo-p-dioxin.
OCDD = Octachlorodibenzo-p-dioxin.
HxCDPE = Hexachlorodiphenyl ether.
OCDPE = Octachlorodiphenyl ether.
DCDPE = Decachlorodiphenyl ether.
TCDF = Tetrachlorodibenzofuran.
PeCDF = Pentachlorodibenzofuran.
HxCDF = Hexachlorodibenzofuran.
HpCDF = Heptachlorodibenzofuran.
OCDF = Octachlorodibenzofuran.
HpCDPE = Heptachlorodiphenyl ether.
NCDPE = Nonachlorodiphenyl ether.
PFK = Perfluorokerosene.

[3] Labeled compound.

[4] There is only one m/z for $^{37}Cl_4$-2,3,7,8,-TCDD (cleanup standard).

TABLE 9—THEORETICAL ION ABUNDANCE RATIOS AND QC LIMITS

Number of chlorine atoms	M/Z's forming ratio	Theoretical ratio	QC limit [1]	
			Lower	Upper
4 [2]	M/(M = 2)	0.77	0.65	0.89
5	(M = 2)/(M = 4)	1.55	1.32	1.78
6	(M = 2)/(M = 4)	1.24	1.05	1.43
6 [3]	M/(M = 2)	0.51	0.43	0.59
7	(M = 2)/(M = 4)	1.05	0.88	1.20
7 [4]	M/(M = 2)	0.44	0.37	0.51
8	(M = 2)/(M = 4)	0.89	0.76	1.02

[1] QC limits represent ±15% windows around the theoretical ion abundance ratios.

[2] Does not apply to $^{37}Cl_4$-2,3,7,8-TCDD (cleanup standard).

[3] Used for $^{13}C_{12}$-HxCDF only.

[4] Used for $^{13}C_{12}$-HpCDF only.

TABLE 10—SUGGESTED SAMPLE QUANTITIES TO BE EXTRACTED FOR VARIOUS MATRICES [1]

Sample Matrix [2]	Example	Percent solids	Phase	Quantity extracted
Single-phase:				
Aqueous	Drinking water Groundwater Treated wastewater	<1	([3])	1000 mL.
Solid	Dry soil Compost Ash	>20	Solid	10 g.
Organic	Waste solvent Waste oil Organic polymer	<1	Organic	10 g.
Tissue	Fish Human adipose		Organic	10 g.

TABLE 10—SUGGESTED SAMPLE QUANTITIES TO BE EXTRACTED FOR VARIOUS MATRICES [1]—Continued

Sample Matrix [2]	Example	Percent solids	Phase	Quantity extracted
Multi-phase:				
Liquid/Solid:				
Aqueous/Solid	Wet soil Untreated effluent. Digested municipal sludge. Filter cake. Paper pulp.	1–30	Solid	10 g.
Organic/solid	Industrial sludge Oily waste	1–100	Both	10 g.
Liquid/Liquid:				
Aqueous/organic	In-process effluent Untreated effluent Drum waste	<1	Organic	10 g.
Aqueous/organic/solid.	Untreated effluent Drum waste	>1	Organic and solid	10 g.

[1] The quantity of sample to be extracted is adjusted to provide 10 g of solids (dry weight). One liter of aqueous samples containing 1% solids will contain 10 g of solids. For aqueous samples containing greater than 1% solids, a lesser volume is used so that 10 g of solids (dry weight) will be extracted.

[2] The sample matrix may be amorphous for some samples. In general, when the CDDs/CDFs are in contact with a multiphase system in which one of the phases is water, they will be preferentially dispersed in or adsorbed on the alternate phase because of their low solubility in water.

[3] Aqueous samples are filtered after spiking with the labeled compounds. The filtrate and the materials trapped on the filter are extracted separately, and the extracts are combined for cleanup and analysis.

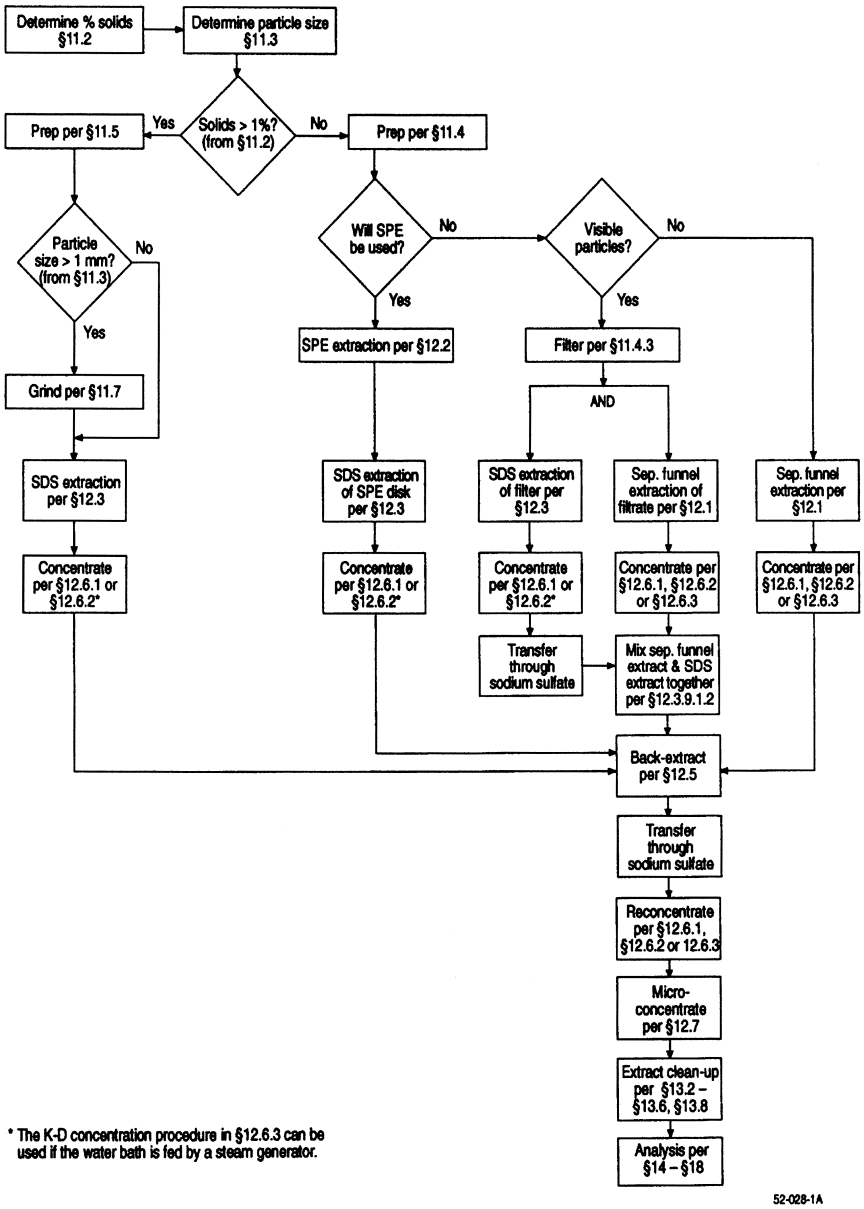

Figure 1. Flow Chart for Analysis of Aqueous and Solid Samples

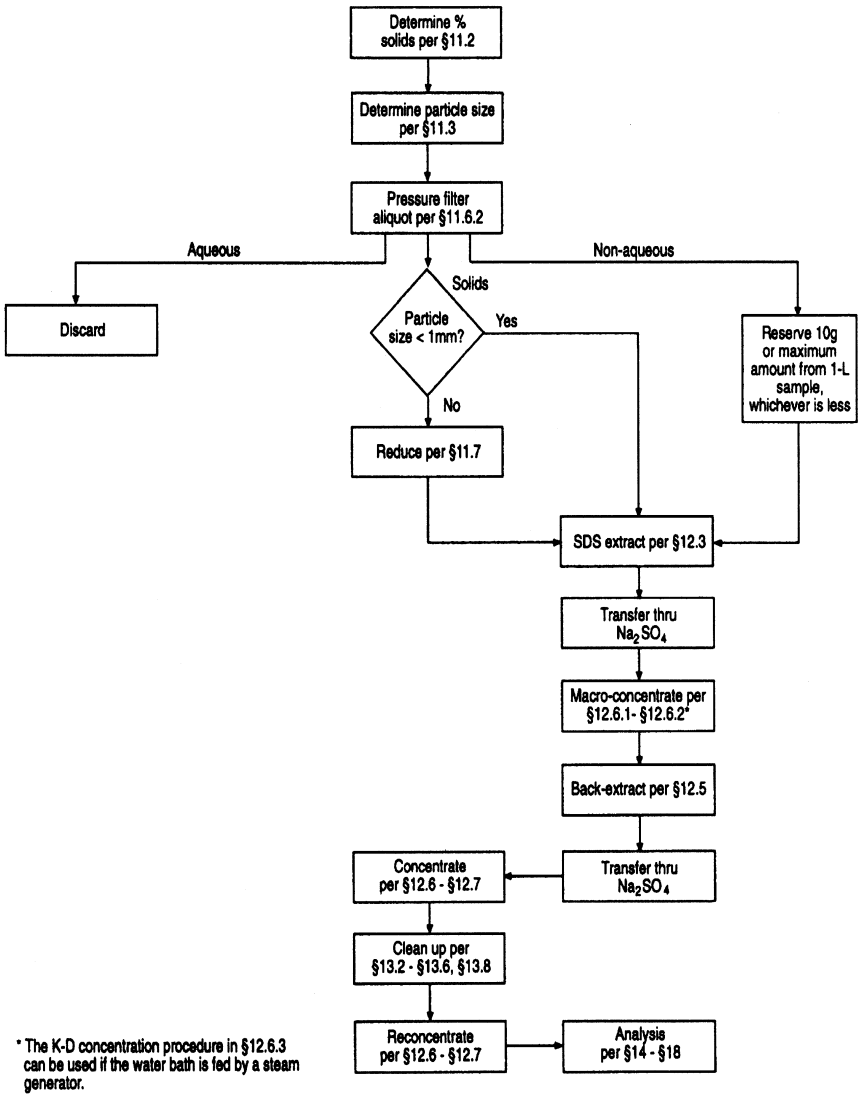

Figure 2. Flow Chart for Analysis of Multi-Phase Samples

52-028-2A

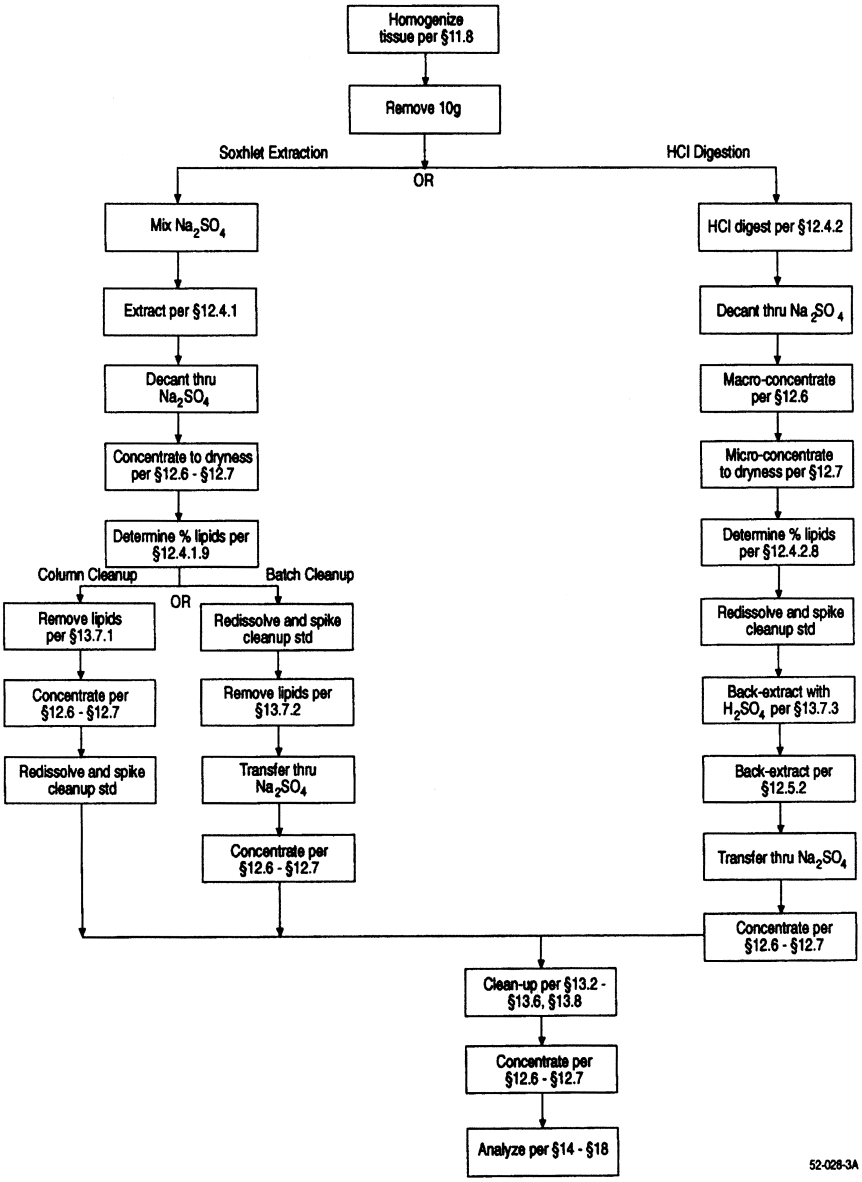

Figure 3. Flow Chart for Analysis of Tissue Samples

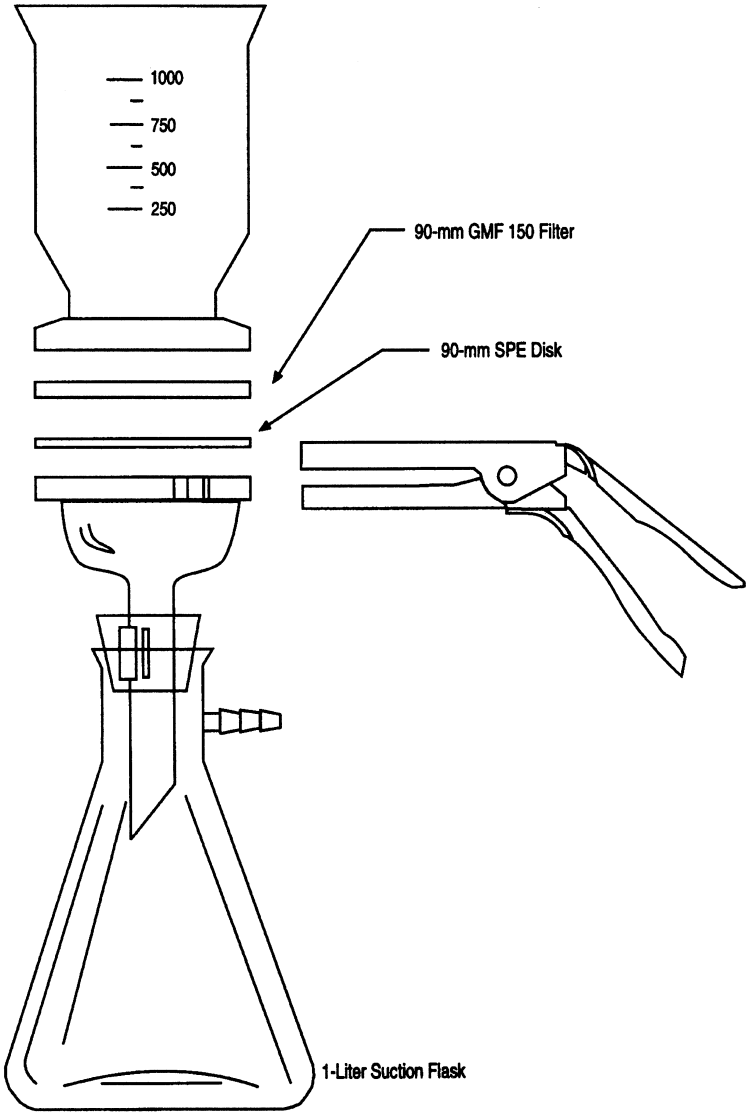

Figure 4. Solid-Phase Extraction Apparatus

52-027-1A

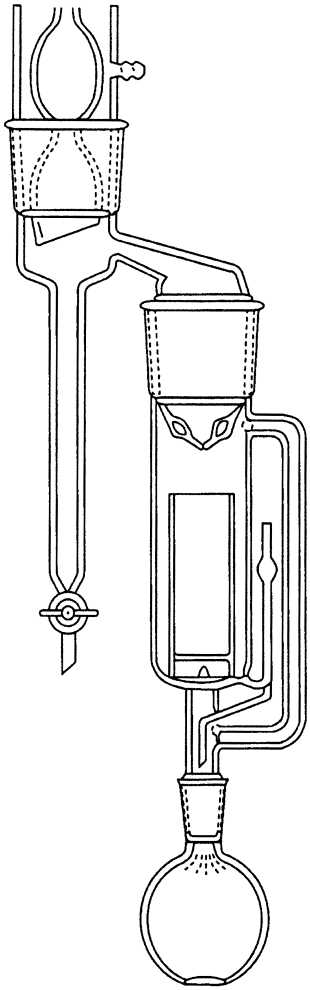

52-027-2A

Figure 5. Soxhlet/Dean-Stark Extractor

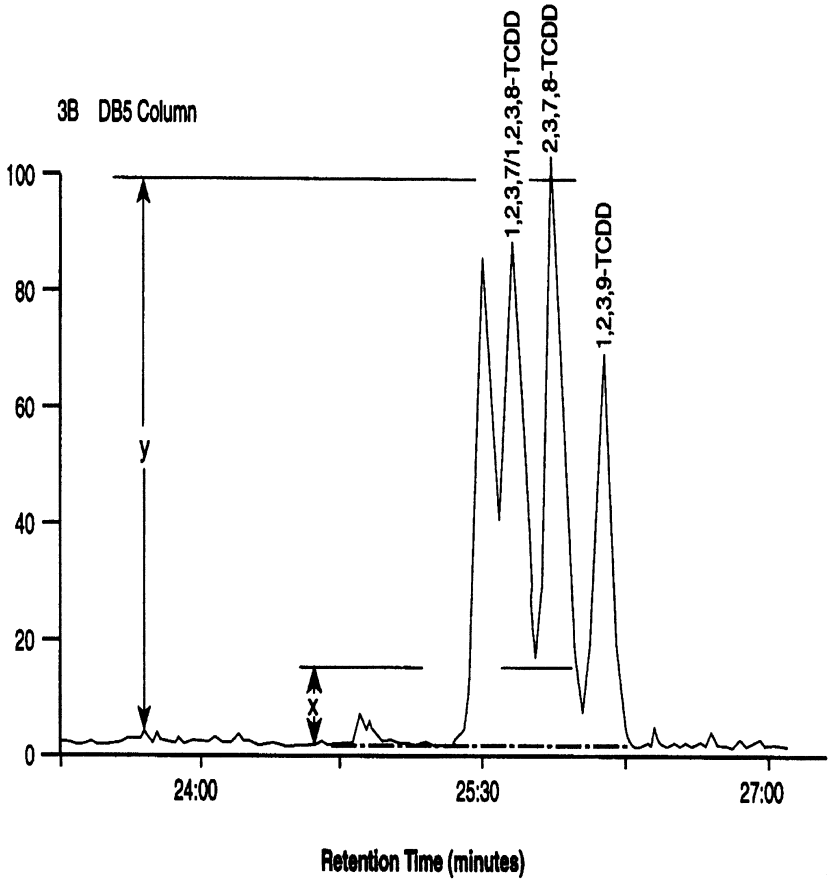

Figure 6. Isomer-Specific Separation of 2,3,7,8-TCDD on DB-5 Column

52-027-03

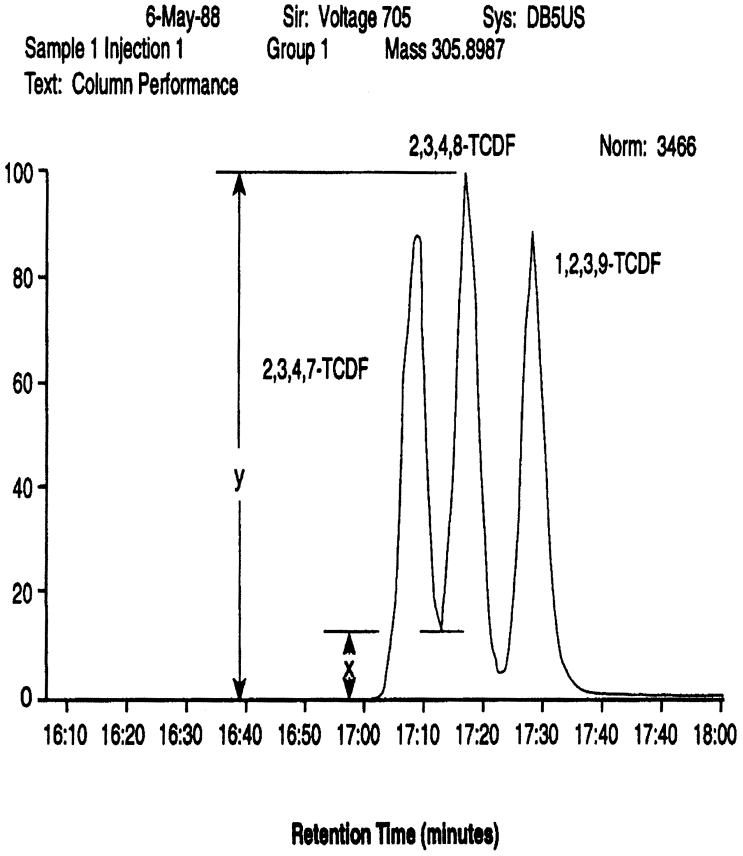

Figure 7. Isomer-Specific Separation of 2,3,7,8-TCDF on DB-5 Column

52-027-4A

24.0 Glossary of Definitions and Purposes

These definitions and purposes are specific to this method but have been conformed to common usage as much as possible.

24.1 Units of weight and Measure and Their Abbreviations.

24.1.1 Symbols:

°C—degrees Celsius
µL—microliter
µm—micrometer
<—less than
>—greater than
%—percent

24.1.2 Alphabetical abbreviations:

amp—ampere
cm—centimeter
g—gram
h—hour
D—inside diameter
in.—inch
L—liter
M—Molecular ion
m—meter
mg—milligram
min—minute
mL—milliliter
mm—millimeter
m/z—mass-to-charge ratio

N—normal; gram molecular weight of solute divided by hydrogen equivalent of solute, per liter of solution
OD—outside diameter
pg—picogram
ppb—part-per-billion
ppm—part-per-million
ppq—part-per-quadrillion
ppt—part-per-trillion
psig—pounds-per-square inch gauge
v/v—volume per unit volume
w/v—weight per unit volume

24.2 Definitions and Acronyms (in Alphabetical Order).

Analyte—A CDD or CDF tested for by this method. The analytes are listed in Table 1.

Calibration Standard (CAL)—A solution prepared from a secondary standard and/or stock solutions and used to calibrate the response of the instrument with respect to analyte concentration.

Calibration Verification Standard (VER)—The mid-point calibration standard (CS3) that is used in to verify calibration. See Table 4.

CDD—Chlorinated Dibenzo-p-ioxin—The isomers and congeners of tetra-through octachlorodibenzo-p-dioxin.

CDF—Chlorinated Dibenzofuran—The isomers and congeners of tetra-through octachlorodibenzofuran.

CS1, CS2, CS3, CS4, CS5—See Calibration standards and Table 4.

Field Blank—An aliquot of reagent water or other reference matrix that is placed in a sample container in the laboratory or the field, and treated as a sample in all respects, including exposure to sampling site conditions, storage, preservation, and all analytical procedures. The purpose of the field blank is to determine if the field or sample transporting procedures and environments have contaminated the sample.

GC—Gas chromatograph or gas chromatography.

GPC—Gel permeation chromatograph or gel permeation chromatography.

HPLC—High performance liquid chromatograph or high performance liquid chromatography.

HRGC—High resolution GC.

HRMS—High resolution MS.

IPR—Initial precision and recovery; four aliquots of the diluted PAR standard analyzed to establish the ability to generate acceptable precision and accuracy. An IPR is performed prior to the first time this method is used and any time the method or instrumentation is modified.

K-D—Kuderna-Danish concentrator; a device used to concentrate the analytes in a solvent.

Laboratory Blank—See method blank.

Laboratory Control sample (LCS)—See ongoing precision and recovery standard (OPR).

Laboratory Reagent Blank—See method blank.

May—This action, activity, or procedural step is neither required nor prohibited.

May Not—This action, activity, or procedural step is prohibited.

Method Blank—An aliquot of reagent water that is treated exactly as a sample including exposure to all glassware, equipment, solvents, reagents, internal standards, and surrogates that are used with samples. The method blank is used to determine if analytes or interferences are present in the laboratory environment, the reagents, or the apparatus.

Minimum Level (ML)—The level at which the entire analytical system must give a recognizable signal and acceptable calibration point for the analyte. It is equivalent to the concentration of the lowest calibration standard, assuming that all method-specified sample weights, volumes, and cleanup procedures have been employed.

MS—Mass spectrometer or mass spectrometry.

Must—This action, activity, or procedural step is required.

OPR—Ongoing precision and recovery standard (OPR); a laboratory blank spiked with known quantities of analytes. The OPR is analyzed exactly like a sample. Its purpose is to assure that the results produced by the laboratory remain within the limits specified in this method for precision and recovery.

PAR—Precision and recovery standard; secondary standard that is diluted and spiked to form the IPR and OPR.

PFK—Perfluorokerosene; the mixture of compounds used to calibrate the exact m/z scale in the HRMS.

Preparation Blank—See method blank.

Primary Dilution Standard—A solution containing the specified analytes that is purchased or prepared from stock solutions and diluted as needed to prepare calibration solutions and other solutions.

Quality Control Check Sample (QCS)—A sample containing all or a subset of the analytes at known concentrations. The QCS is obtained from a source external to the laboratory or is prepared from a source of standards different from the source of calibration standards. It is used to check laboratory performance with test materials prepared external to the normal preparation process.

Reagent Water—Water demonstrated to be free from the analytes of interest and potentially interfering substances at the method detection limit for the analyte.

Relative Standard Deviation (RSD)—The standard deviation times 100 divided by the mean. Also termed ''coefficient of variation.''

RF—Response factor. See Section 10.6.1.

RR—Relative response. See Section 10.5.2.

RSD—See relative standard deviation.

SDS—Soxhlet/Dean-Stark extractor; an extraction device applied to the extraction of solid and semi-solid materials (Reference 7).

Should—This action, activity, or procedural step is suggested but not required.

SICP—Selected ion current profile; the line described by the signal at an exact m/z.

SPE—Solid-phase extraction; an extraction technique in which an analyte is extracted from an aqueous sample by passage over or through a material capable of reversibly adsorbing the analyte. Also termed liquid-solid extraction.

Stock Solution—A solution containing an analyte that is prepared using a reference material traceable to EPA, the National Institute of Science and Technology (NIST), or a source that will attest to the purity and authenticity of the reference material.

TCDD—Tetrachlorodibenzo-p-dioxin.

TCDF—Tetrachlorodibenzofuran.

VER—See calibration verification standard.

METHOD 1624 REVISION B—VOLATILE ORGANIC COMPOUNDS BY ISOTOPE DILUTION GC/MS

1. Scope and Application

1.1 This method is designed to determine the volatile toxic organic pollutants associated with the 1976 Consent Decree and additional compounds amenable to purge and trap gas chromatography-mass spectrometry (GC/MS).

1.2 The chemical compounds listed in table 1 may be determined in municipal and industrial discharges by this method. The methmd is designed to meet the survey requirements of Effluent Guidelines Division (EGD) and the National Pollutants Discharge Elimination System (NPDES) under 40 CFR 136.1 and 136.5. Any modifications of this method, beyond those expressly permitted, shall be considered as major modifications subject to application and approval of alternate test procedures under 40 CFR 136.4 and 136.5.

1.3 The detection limit of this method is usually dependent on the level of interferences rather than instrumental limitations. The limits in table 2 represent the minimum quantity that can be detected with no interferences present.

1.4 The GC/MS portions of this method are for use only by analysts experienced with GC/MS or under the close supervision of such qualified persons. Laboratories unfamiliar with the analyses of environmental samples by GC/MS should run the performance tests in reference 1 before beginning.

2. Summary of Method

2.1 Stable isotopically labeled analogs of the compounds of interest are added to a 5 mL water sample. The sample is purged at 20–25 °C with an inert gas in a specially designed chamber. The volatile organic compounds are transferred from the aqueous phase into the gaseous phase where they are passed into a sorbent column and trapped. After purging is completed, the trap is backflushed and heated rapidly to desorb the compounds into a gas chromatograph (GC). The compounds are separated by the GC and detected by a mass spectrometer (MS) (references 2 and 3). The labeled compounds serve to correct the variability of the analytical technique.

2.2 Identification of a compound (qualitative analysis) is performed by comparing the GC retention time and the background corrected characteristic spectral masses with those of authentic standards.

2.3 Quantitative analysis is performed by GC/MS using extracted ion current profile (EICP) areas. Isotope dilution is used when labeled compounds are available; otherwise, an internal standard method is used.

2.4 Quality is assured through reproducible calibration and testing of the purge and trap and GC/MS systems.

3. Contamination and Interferences

3.1 Impurities in the purge gas, organic compounds out-gassing from the plumbing upstream of the trap, and solvent vapors in the laboratory account for the majority of contamination problems. The analytical system is demonstrated to be free from interferences under conditions of the analysis by analyzing blanks initially and with each sample lot (samples analyzed on the same 8 hr shift), as described in Section 8.5.

3.2 Samples can be contaminated by diffusion of volatile organic compounds (particularly methylene chloride) through the bottle seal during shipment and storage. A field blank prepared from reagent water and carried through the sampling and handling protocol serves as a check on such contamination.

3.3 Contamination by carry-over can occur when high level and low level samples are analyzed sequentially. To reduce carry-over, the purging device and sample syringe are rinsed between samples with reagent water. When an unusually concentrated sample is encountered, it is followed by analysis of a reagent water blank to check for carry-over. For samples containing large amounts of water soluble materials, suspended solids, high boiling compounds, or high levels or purgeable compounds, the purge device is washed with soap solution, rinsed with tap and distilled water, and dried in an oven at 100–125 °C. The trap and other parts of the system are also subject to contamination; therefore, frequent bakeout and purging of the entire system may be required.

3.4 Interferences resulting from samples will vary considerably from source to source, depending on the diversity of the industrial complex or municipality being sampled.

4. Safety

4.1 The toxicity or carcinogenicity of each compound or reagent used in this method has not been precisely determined; however, each chemical compound should be treated as a potential health hazard. Exposure to these compounds should be reduced to the lowest possible level. The laboratory is responsible for maintaining a current awareness file of OSHA regulations regarding the safe handling of the chemicals specified in this method. A reference file of data handling sheets should also be made available to all personnel involved in these analyses. Additional information on laboratory safety can be found in references 4–6.

4.2 The following compounds covered by this method have been tentatively classified as known or suspected human or mammalian carcinogens: benzene, carbon tetrachloride, chloroform, and vinyl chloride. Primary standards of these toxic compounds should be prepared in a hood, and a NIOSH/MESA approved toxic gas respirator should be worn when high concentrations are handled.

5. Apparatus and Materials

5.1 Sample bottles for discrete sampling.

5.1.1 Bottle—25 to 40 mL with screw cap (Pierce 13075, or equivalent). Detergent wash, rinse with tap and distilled water, and dry at >105 °C for one hr minimum before use.

5.1.2 Septum—Teflon-faced silicone (Pierce 12722, or equivalent), cleaned as above and baked at 100–200 °C, for one hour minimum.

5.2 Purge and trap device—consists of purging device, trap, and desorber. Complete devices are commercially available.

5.2.1 Purging device—designed to accept 5 mL samples with water column at least 3 cm deep. The volume of the gaseous head space between the water and trap shall be less than 15 mL. The purge gas shall be introduced less than 5 mm from the base of the water column and shall pass through the water as bubbles with a diameter less than 3 mm. The purging device shown in Figure 1 meets these criteria.

5.2.2 Trap—25 to 30 cm × 2.5 mm i.d. minimum, containing the following:

5.2.2.1 Methyl silicone packing—one ±0.2 cm, 3 percent OV–1 on 60/80 mesh Chromosorb W, or equivalent.

5.2.2.2 Porous polymer—15 ±1.0 cm, Tenax GC (2,6-diphenylene oxide polymer), 60/80 mesh, chromatographic grade, or equivalent.

5.2.2.3 Silica gel—8 ±1.0 cm, Davison Chemical, 35/60 mesh, grade 15, or equivalent. The trap shown in Figure 2 meets these specifications.

5.2.3 Desorber—shall heat the trap to 175 ±5 °C in 45 seconds or less. The polymer section of the trap shall not exceed 180 °C, and the remaining sections shall not exceed 220 °C. The desorber shown in Figure 2 meets these specifications.

5.2.4 The purge and trap device may be a separate unit or coupled to a GC as shown in Figures 3 and 4.

5.3 Gas chromatograph—shall be linearly temperature programmable with initial and final holds, shall contain a glass jet separator as the MS interface, and shall produce results which meet the calibration (Section 7), quality assurance (Section 8), and performance tests (Section 11) of this method.

5.3.1 Column—2.8 ±0.4 m × 2 ±0.5 mm i. d. glass, packekd with one percent SP–1000 on Carbopak B, 60/80 mesh, or equivalent.

5.4 Mass spectrometer—70 eV electron impact ionization; shall repetitively scan from 20 to 250 amu every 2–3 seconds, and produce a unit resolution (valleys between m/z 174–176 less than 10 percent of the height of the m/z 175 peak), background corrected mass spectrum from 50 ng 4-bromo-fluorobenzene (BFB) injected into the GC. The BFB spectrum shall meet the mass-intensity criteria in Table 3. All portions of the GC column, transfer lines, and separator which connect the GC column to the ion source shall remain at or above the column temperature during analysis to preclude condensation of less volatile compounds.

5.5 Data system—shall collect and record MS data, store mass intensity data in spectral libraries, process GC/MS data and generate reports, and shall calculate and record response factors.

5.5.1 Data acquisition—mass spectra shall be collected continuously throughout the analysis and stored on a mass storage device.

5.5.2 Mass spectral libraries—user created libraries containing mass spectra obtained from analysis of authentic standards shall be employed to reverse search GC/MS runs for the compounds of interest (Section 7.2).

5.5.3 Data processing—the data system shall be used to search, locate, identify, and quantify the compounds of interest in each GC/MS analysis. Software routines shall be employed to compute retention times and EICP areas. Displays of spectra, mass chromatograms, and library comparisons are required to verify results.

5.5.4 Response factors and multipoint calibrations—the data system shall be used to record and maintain lists of response factors (response ratios for isotope dilution) and generate multi-point calibration curves (Section 7). Computations of relative standard deviation (coefficient of variation) are useful for testing calibration linearity. Statistics on initial and on-going performance shall be maintained (Sections 8 and 11).

5.6 Syringes—5 mL glass hypodermic, with Luer-lok tips.

5.7 Micro syringes—10, 25, and 100 uL.

5.8 Syringe valves—2-way, with Luer ends (Telfon or Kel-F).

5.9 Syringe—5 mL, gas-tight, with shut-off valve.

5.10 Bottles—15 mL., screw-cap with Telfon liner.

5.11 Balance—analytical, capable of weighing 0.1 mg.

6. Reagents and Standards

6.1 Reagent water—water in which the compounds of interest and interfering compounds are not detected by this method (Section 11.7). It may be generated by any of the following methods:

6.1.1 Activated carbon—pass tap water through a carbon bed (Calgon Filtrasorb-300, or equivalent).

6.1.2 Water purifier—pass tap water through a purifier (Millipore Super Q, or equivalent).

6.1.3 Boil and purge—heat tap water to 90–100 °C and bubble contaminant free inert gas through it for approx one hour. While still hot, transfer the water to screw-cap bottles and seal with a Teflon-lined cap.

6.2 Sodium thiosulfate—ACS granular.

6.3 Methanol—pesticide quality or equivalent.

6.4 Standard solutions—purchased as solution or mixtures with certification to their purity, concentration, and authenticity, or prepared from materials of known purity and composition. If compound purity is 96 percent or greater, the weight may be used without correction to calculate the concentration of the standard.

6.5 Preparation of stock solutions—prepare in methanol using liquid or gaseous standards per the steps below. Observe the safety precautions given in Section 4.

6.5.1 Place approx 9.8 mL of methanol in a 10 mL ground glass stoppered volumetric flask. Allow the flask to stand unstoppered for approximately 10 minutes or until all methanol wetted surfaces have dried. In each case, weigh the flask, immediately add the compound, then immediately reweigh to prevent evaporation losses from affecting the measurement.

6.5.1.1 Liquids—using a 100 µL syringe, permit 2 drops of liquid to fall into the methanol without contacting the leck of the flask. Alternatively, inject a known volume of the compound into the methanol in the flask using a micro-syringe.

6.5.1.2 Gases (chloromethane, bromomethane, chloroethane, vinyl chloride)—fill a valved 5 mL gas-tight syringe with the compound. Lower the needle to approximately 5 mm above the methanol meniscus. Slowly introduce the compound above the surface of the meniscus. The gas will dissolve rapidly in the methanol.

6.5.2 Fill the flask to volume, stopper, then mix by inverting several times. Calculate the concentration in mg/mL (µg/µL) from the weight gain (or density if a known volume was injected).

6.5.3 Transfer the stock solution to a Teflon sealed screw-cap-bottle. Store, with minimal headspace, in the dark at −10 to −20 °C.

6.5.4 Prepare fresh standards weekly for the gases and 2-chloroethylvinyl ether. All other standards are replaced after one month, or sooner if comparison with check standards indicate a change in concentration. Quality control check standards that can be used to determine the accuracy of calibration standards are available from the US Environmental Protection Agency, Environmental Monitoring and Support Laboratory, Cincinnati, Ohio.

6.6 Labeled compound spiking solution—from stock standard solutions prepared as above, or from mixtures, prepare the spiking solution to contain a concentration such that a 5–10 µL spike into each 5 mL sample, blank, or aqueous standard analyzed will result in a concentration of 20 µg/L of each labeled compound. For the gases and for the water soluble compounds (acrolein, acrylonitrile, acetone, diethyl ether, and MEK), a concentration of 100 µg/L may be used. Include the internal standards (Section 7.5) in this solution so that a concentration of 20 µg/L in each sample, blank, or aqueous standard will be produced.

6.7 Secondary standards—using stock solutions, prepare a secondary standard in methanol to contain each pollutant at a concentration of 500 µg/mL For the gases and water soluble compounds (Section 6.6), a concentration of 2.5 mg/mL may be used.

6.7.1 Aqueous calibration standards—using a 25 µL syringe, add 20 µL of the secondary standard (Section 6.7) to 50, 100, 200, 500, and 1000 mL of reagent water to produce concentrations of 200, 100, 50, 20, and 10 µg/L, respectively. If the higher concentration standard for the gases and water soluble compounds was chosen (Section 6.6), these compounds will be at concentrations of 1000, 500, 250, 100, and 50 µg/L in the aqueous calibration standards.

6.7.2 Aqueous performance standard—an aqueous standard containing all pollutants, internal standards, labeled compounds, and BFB is prepared daily, and analyzed each shift to demonstrate performance (Section 11). This standard shall contain either 20 or 100 µg/L of the labeled and pollutant gases and water soluble compounds, 10 µg/L BFB, and 20 µg/L of all other pollutants, labeled compounds, and internal standards. It may be the nominal 20 µg/L aqueous calibration standard (Section 6.7.1).

6.7.3 A methanolic standard containing all pollutants and internal standards is prepared to demonstrate recovery of these compounds when syringe injection and purge and trap analyses are compared. This standard shall contain either 100 µg/mL or 500 µg/mL of the gases and water soluble compounds, and 100 µg/mL of the remaining pollutants

and internal standards (consistent with the amounts in the aqueous performance standard in 6.7.2).

6.7.4 Other standards which may be needed are those for test of BFB performance (Section 7.1) and for collection of mass spectra for storage in spectral libraries (Section 7.2).

7. Calibration

7.1 Assemble the gas chromatographic apparatus and establish operating conditions given in table 2. By injecting standards into the GC, demonstrate that the analytical system meets the detection limits in table 2 and the mass-intensity criteria in table 3 for 50 ng BFB.

7.2 Mass spectral libraries—detection and identification of the compound of interest are dependent upon the spectra stored in user created libraries.

7.2.1 Obtain a mass spectrum of each pollutant and labeled compound and each internal standard by analyzing an authentic standard either singly or as part of a mixture in which there is no interference between closely eluted components. That only a single compound is present is determined by examination of the spectrum. Fragments not attributable to the compound under study indicate the presence of an interfering compound. Adjust the analytical conditions and scan rate (for this test only) to produce an undistorted spectrum at the GC peak maximum. An undistorted spectrum will usually be obtained if five complete spectra are collected across the upper half of the GC peak. Software algorithms designed to ''enhance'' the spectrum may eliminate distortion, but may also eliminate authentic m/z's or introduce other distortion.

7.2.3 The authentic reference spectrum is obtained under BFB tuning conditions (Section 7.1 and table 3) to normalize it to spectra from other instruments.

7.2.4 The spectrum is edited by saving the 5 most intense mass spectral peaks and all other mass spectral peaks greater than 10 percent of the base peak. This spectrum is stored for reverse search and for compound confirmation.

7.3 Assemble the purge and trap device. Pack the trap as shown in Figure 2 and condition overnight at 170–180 °C by backflushing with an inert gas at a flow rate of 20–30 mL/min. Condition traps daily for a minimum of 10 minutes prior to use.

7.3.1 Analyze the aqueous performance standard (Section 6.7.2) according to the purge and trap procedure in Section 10. Compute the area at the primary m/z (table 4) for each compound. Compare these areas to those obtained by injecting one µL of the methanolic standard (Section 6.7.3) to determine compound recovery. The recovery shall be greater than 20 percent for the water soluble compounds, and 60–110 percent for all other compounds. This recovery is demonstrated initially for each purge and trap GC/MS system. The test is repeated only if the purge and trap or GC/MS systems are modified in any way that might result in a change in recovery.

7.3.2 Demonstrate that 100 ng toluene (or toluene-d8) produces an area at m/z 91 (or 99) approx one-tenth that required to exceed the linear range of the system. The exact value must be determined by experience for each instrument. It is used to match the calibration range of the instrument to the analytical range and detection limits required.

7.4 Calibration by isotope dilution—the isotope dilution approach is used for the purgeable organic compounds when appropriate labeled compounds are available and when interferences do not preclude the analysis. If labeled compounds are not available, or interferences are present, internal standard methods (Section 7.5 or 7.6) are used. A calibration curve encompassing the concentration range of interest is prepared for each compound determined. The relative response (RR) vs concentration (µg/L) is plotted or computed using a linear regression. An example of a calibration curve for toluene using toluene-d8 is given in figure 5. Also shown are the ±10 percent error limits (dotted lines). Relative response is determined according to the procedures described below. A minimum of five data points are required for calibration (Section 7.4.4).

7.4.1 The relative response (RR) of pollutant to labeled compound is determined from isotope ratio values calculated from acquired data. Three isotope ratios are used in this process:

R_X = the isotope ratio measured in the pure pollutant (figure 6A).

R_y = the isotope ratio of pure labeled compound (figure 6B).

R_m = the isotope ratio measured in the analytical mixture of the pollutant and labeled compounds (figure 6C).

The correct way to calculate RR is: $RR = (R_y - R_m)(R_X + 1)/(R_m - R_X)(R_y + 1)$ If R_m is not between $2R_y$ and $0.5R_X$, the method does not apply and the sample is analyzed by internal or external standard methods (Section 7.5 or 7.6).

7.4.2 In most cases, the retention times of the pollutant and labeled compound are the same and isotope ratios (R's) can be calculated from the EICP areas, where: R = (area at m_1/z)/(area at m_2/z) If either of the areas is zero, it is assigned a value of one in the calculations; that is, if: area of m_1/z = 50721, and area of m_2/z = 0, then R = 50721/1 = 50720. The m/z's are always selected such that $R_X > R_y$. When there is a difference in retention times (RT) between the pollutant and labeled compounds, special precautions are required to determine the isotope ratios.

R_X, R_y, and R_m are defined as follows:

R_X=[area m_1/z (at RT_1)]/1

R_y = 1/[area m_2/z (at RT_2)]

R_m=[area m_1/z (at RT_1)]/[area m_2/z (at RT_2)]

7.4.3 An example of the above calculations can be taken from the data plotted in figure 6 for toluene and toluene-d8. For these data, R_X = 168920/1 = 168900, R_y = 1/60960 = 0.00001640, and R_m = 96868/82508 = 1.174. The RR for the above data is then calculated using the equation given in Section 7.4.1. For the example, RR = 1.174.

NOTE: Not all labeled compounds elute before their pollutant analogs.

7.4.4 To calibrate the analytical system by isotope dilution, analyze a 5 mL aliquot of each of the aqueous calibration standards (Section 6.7.1) spiked with an appropriate constant amount of the labeled compound spiking solution (Section 6.6), using the purge and trap procedure in section 10. Compute the RR at each concentration.

7.4.5 Linearity—if the ratio of relative response to concentration for any compound is constant (less than 20 percent coefficient of variation) over the 5 point calibration range, an averaged relative response/concentration ratio may be used for that compound; otherwise, the complete calibration curve for that compound shall be used over the 5 point calibration range.

7.5 Calibration by internal standard—used when criteria for isotope dilution (Section 7.4) cannot be met. The method is applied to pollutants having no labeled analog and to the labeled compounds. The internal standards used for volatiles analyses are bromochloromethane, 2-bromo-1-chloropropane, and 1,4-dichlorobutane. Concentrations of the labeled compounds and pollutants without labeled analogs are computed relative to the nearest eluted internal standard, as shown in table 2.

7.5.1 Response factors—calibration requires the determination of response factors (RF) which are defined by the following equation:

RF = $(A_s x C_{is})/(A_{is} x C_s)$, where A_s is the EICP area at the characteristic m/z for the compound in the daily standard. A_{is} is the EICP area at the characteristic m/z for the internal standard.

C_{is} is the concentration (ug/L) of the internal standard

C_s is the concentration of the pollutant in the daily standard.

7.5.2 The response factor is determined at 10, 20, 50, 100, and 200 ug/L for the pollutants (optionally at five times these concentrations for gases and water soluble pollutants—see Section 6.7), in a way analogous to that for calibration by isotope dilution (Section 7.4.4). The RF is plotted against concentration for each compound in the standard (C_s) to produce a calibration curve.

7.5.3 Linearity—if the response factor (RF) for any compound is constant (less than 35 percent coefficient of variation) over the 5 point calibration range, an averaged response factor may be used for that compound; otherwise, the complete calibration curve for that compound shall be used over the 5 point range.

7.6 Combined calibration—by adding the isotopically labeled compounds and internal standards (Section 6.6) to the aqueous calibration standards (Section 6.7.1), a single set of analyses can be used to produce calibration curves for the isotope dilution and internal standard methods. These curves are verified each shift (Section 11.5) by purging the aqueous performance standard (Section 6.7.2). Recalibration is required only if calibration and on-going performance (Section 11.5) criteria cannot be met.

8. Quality Assurance/Quality Control

8.1 Each laboratory that uses this method is required to operate a formal quality assurance program. The minimum requirements of this program consist of an initial demonstration of laboratory capability, analysis of samples spiked with labeled compounds to evaluate and document data quality, and analysis of standards and blanks as tests of continued performance. Laboratory performance is compared to established performance criteria to determine if the results of analyses meet the performance characteristics of the method.

8.1.1 The analyst shall make an initial demonstration of the ability to generate acceptable accuracy and precision with this method. This ability is established as described in Section 8.2.

8.1.2 The analyst is permitted to modify this method to improve separations or lower the costs of measurements, provided all performance specifications are met. Each time a modification is made to the method, the analyst is required to repeat the procedure in Section 8.2 to demonstrate method performance.

8.1.3 Analyses of blanks are required to demonstrate freedom from contamination and that the compounds of interest and interfering compounds have not been carried over from a previous analysis (Section 3). The procedures and criteria for analysis of a blank are described in Sections 8.5 and 11.7.

8.1.4 The laboratory shall spike all samples with labeled compounds to monitor method performance. This test is described in Section 8.3. When results of these spikes indicate atypical method performance for samples, the samples are diluted to bring method performance within acceptable limits (Section 14.2).

8.1.5 The laboratory shall, on an on-going basis, demonstrate through the analysis of the aqueous performance standard (Section 6.7.2) that the analysis system is in control. This procedure is described in Sections 11.1 and 11.5.

8.1.6 The laboratory shall maintain records to define the quality of data that is generated. Development of accuracy statements is described in Sections 8.4 and 11.5.2.

8.2 Initial precision and accuracy—to establish the ability to generate acceptable precision and accuracy, the analyst shall perform the following operations:

8.2.1 Analyze two sets of four 5–mL aliquots (8 aliquots total) of the aqueous performance standard (Section 6.7.2) according to the method beginning in Section 10.

8.2.2 Using results of the first set of four analyses in Section 8.2.1, compute the average recovery ($\bar{X}$) in µg/L and the standard deviation of the recovery (s) in µg/L for each compound, by isotope dilution for polluitants with a labeled analog, and by internal standard for labeled compounds and pollutants with no labeled analog.

8.2.3 For each compound, compare s and $\bar{X}$ with the corresponding limits for initial precision and accuracy found in table 5. If s and $\bar{X}$ for all compounds meet the acceptance criteria, system performance is acceptable and analysis of blanks and samples may begin. If individual $\bar{X}$ falls outside the range for accuracy, system performance is unacceptable for that compound.

NOTE: The large number of compounds in table 5 present a substantial probability that one or more will fail one of the acceptance criteria when all compoulds are analyzed. To determine if the analytical system is out of control, or if the failure can be attributed to probability, proceed as follows:

8.2.4 Using the results of the second set of four analyses, compute s and $\bar{X}$ for only those compounds which failed the test of the first set of four analyses (Section 8.2.3). If these compounds now pass, system performance is acceptable for all compounds and analysis of blanks and samples may begin. If, however, any of the same compounds fail again, the analysis system is not performing properly for the compound(s) in question. In this event, correct the problem and repeat the entire test (Section 8.2.1).

8.3 The laboratory shall spike all samples with labeled compounds to assess method performance on the sample matrix.

8.3.1 Spike and analyze each sample according to the method beginning in Section 10.

8.3.2 Compute the percent recovery (P) of the labeled compounds using the internal standard method (Section 7.5).

8.3.3 Compare the percent recovery for each compound with the corresponding labeled compound recovery limit in table 5. If the recovery of any compound falls outside its warning limit, method performance is unacceptable for that compound in that sample. Therefore, the sample matrix is complex and the sample is to be diluted and reanalyzed, per Section 14.2.

8.4 As part of the QA program for the laboratory, method accuracy for wastewater samples shall be assessed and records shall be maintained. After the analysis of five wastewater samples for which the labeled compounds pass the tests in Section 8.3.3, compute the average percent recovery (P) and the standard deviation of the percent recovery (s_p) for the labeled compounds only. Express the accuracy assessment as a percent recovery interval from $P - 2s_p$ to $P + 2s_p$. For example, if P = 90% and s_p = 10%, the accuracy interval is expressed as 70–110%. Update the accuracy assessment for each compound on a regular basis (e.g. after each 5–10 new accuracy measurements).

8.5 Blanks—reagent water blanks are analyzed to demonstrate freedom from carry-over (Section 3) and contamination.

8.5.1 The level at which the purge and trap system will carry greater than 5 µg/L of a pollutant of interest (table 1) into a succeeding blank shall be determined by analyzing successively larger concentrations of these compounds. When a sample contains this concentration or more, a blank shall be analyzed immediately following this sample to demonstrate no carry-over at the 5 µg/L level.

8.5.2 With each sample lot (samples analyzed on the same 8 hr shift), a blank shall be analyzed immediately after analysis of the aqueous performance standard (Section 11.1) to demonstrate freedom from contamination. If any of the compounds of interest (table 1) or any potentially interfering compound is found in a blank at greater than 10 µg/L (assuming a response factor of 1 relative to the nearest eluted internal standard for compounds not listed in table 1), analysis of samples is halted until the source of contamination is eliminated and a blank shows no evidence of contamination at this level.

8.6 The specifications contained in this method can be met if the apparatus used is calibrated properly, then maintained in a calibrated state.

The standards used for calibration (Section 7), calibration verification (Section 11.5) and for initial (Section 8.2) and on-going (Section 11.5) precision and accuracy should be identical, so that the most precise results will be obtained. The GC/MS instrument in particular will provide the most reproducible results if dedicated to the settings and conditions required for the analyses of volatiles by this method.

8.7 Depending on specific program requirements, field replicates may be collected to determine the precision of the sampling technique, and spiked samples may be required to determine the accuracy of the analysis when internal or external standard methods are used.

9. Sample Collection, Preservation, and Handling

9.1 Grab samples are collected in glass containers having a total volume greater than 20 mL. Fill sample bottles so that no air bubbles pass through the sample as the bottle is filled. Seal each bottle so that no air bubbles are entrapped. Maintain the hermetic seal on the sample bottle until time of analysis.

9.2 Samples are maintained at 0–4 °C from the time of collection until analysis. If the sample contains residual chlorine, add sodium thiosulfate preservative (10 mg/40 mL) to the empty sample bottles just prior to shipment to the sample site. EPA Methods 330.4 and 330.5 may be used for measurement of residual chlorine (Reference 8). If preservative has been added, shake bottle vigorously for one minute immediately after filling.

9.3 Experimental evidence indicates that some aromatic compounds, notably benzene, toluene, and ethyl benzene are susceptible to rapid biological degradation under certain environmental conditions. Refrigeration alone may not be adequate to preserve these compounds in wastewaters for more than seven days. For this reason, a separate sample should be collected, acidified, and analyzed when these aromatics are to be determined. Collect about 500 mL of sample in a clean container.

Adjust the pH of the sample to about 2 by adding HCl (1 + 1) while stirring. Check pH with narrow range (1.4 to 2.8) pH paper. Fill a sample container as described in Section 9.1. If residual chlorine is present, add sodium thiosulfate to a separate sample container and fill as in Section 9.1.

9.4 All samples shall be analyzed within 14 days of collection.

10. Purge, Trap, and GC/MS Analysis

10.1 Remove standards and samples from cold storage and bring to 20–25 °.

10.2 Adjust the purge gas flow rate to 40 ±4 mL/min. Attach the trap inlet to the purging device and set the valve to the purge mode (figure 3). Open the syringe valve located on the purging device sample introduction needle (figure 1).

10.3 Remove the plunger from a 5–mL syringe and attach a closed syringe valve. Open the sample bottle and carefully pour the sample into the syringe barrel until it overflows. Replace the plunger and compress the sample. Open the syringe valve and vent any residual air while adjusting the sample volume to 5.0 mL. Because this process of taking an aliquot destroys the validity of the sample for future analysis, fill a second syringe at this time to protect against possible loss of data. Add an appropriate amount of the labeled compound spiking solution (Section 6.6) through the valve bore, then close the valve.

10.4 Attach the syringe valve assembly to the syringe valve on the purging device. Open both syringe valves and inject the sample into the purging chamber.

10.5 Close both valves and purge the sample for 11.0 ±0.1 minutes at 20–25 °C.

10.6 After the 11 minute purge time, attach the trap to the chromatograph and set the purge and trap apparatus to the desorb mode (figure 4). Desorb the trapped compounds into the GC column by heating the trap to 170–180 °C while backflushing with carrier gas at 20–60 mL/min for four minutes. Start MS data acquisition upon start of the desorb cycle, and start the GC column temperature program 3 minutes later. Table 1 summarizes the recommended operating conditions for the gas chromatograph. Included in this table are retention times and detection limits that were achieved under these conditions. Other columns may be used provided the requirements in Section 8 can be met. If the priority pollutant gases produce GC peaks so broad that the precision and recovery specifications (Section 8.2) cannot be met, the column may be cooled to ambient or sub-ambient temperatures to sharpen these peaks.

10.7 While analysis of the desorbed compounds proceeds, empty the purging chamber using the sample introduction syringe. Wash the chamber with two 5-mL portions of reagent water. After the purging device has been emptied, allow the purge gas to vent through the chamber until the frit is dry, so that it is ready for the next sample.

10.8 After desorbing the sample for four minutes, recondition the trap by returning to the purge mode. Wait 15 seconds, then close the syringe valve on the purging device to begin gas flow through the trap. Maintain the trap temperature at 170–180 °C. After approximately seven minutes, turn off the trap heater and open the syringe valve to stop the gas flow through the trap. When cool, the trap is ready for the next sample.

11. System Performance

11.1 At the beginning of each 8 hr shift during which analyses are performed, system calibration and performance shall be verified for all pollutants and labeled compounds. For these tests, analysis of the aqueous performance standard (Section 6.7.2) shall be used to verify all performance criteria. Adjustment and/or recalibration (per Section 7) shall be performed until all performance criteria are met. Only after all performance criteria are met may blanks and samples be analyzed.

11.2 BFB spectrum validity—the criteria in table 3 shall be met.

11.3 Retention times—the absolute retention times of all compounds shall approximate those given in Table 2.

11.4 GC resolution—the valley height between toluene and toluene-d8 (at m/z 91 and 99 plotted on the same graph) shall be less than 10 percent of the taller of the two peaks.

11.5 Calibration verification and on-going precision and accuracy—compute the concentration of each polutant (Table 1) by isotope dilution (Section 7.4) for those compmunds which have labeled analogs. Compute the concentration of each pollutant (Table 1) which has no labeled analog by the internal standard method (Section 7.5). Compute the concentration of the labeled compounds by the internal standard method. These concentrations are computed based on the calibration data determined in Section 7.

11.5.1 For each pollutant and labeled compound, compare the concentration with the corresponding limit for on-going accuracy in Table 5. If all compmunds meet the acceptance criteria, system performance is acceptable and analysis of blanks and samples may continue. If any individual value falls outside the range given, system performance is unacceptable for that compound.

NOTE: The large number of compounds in Table 5 present a substantial probability that one or more will fail the acceptance criteria when all compounds are analyzed. To determine if the analytical system is out of control, or if the failure may be attributed to probability, proceed as follows:

11.5.1.1 Analyze a second aliquot of the aqueous performance standard (Section 6.7.2).

11.5.1.2 Compute the concentration for only those compounds which failed the first test (Section 11.5.1). If these compounds now pass, system performance is acceptable for all compounds and analyses of blanks and samples may proceed. If, however, any of the compounds fail again, the measurement system is not performing properly for these compounds. In this event, locate and correct the problem or recalibrate the system (Section 7), and repeat the entire test (Section 11.1) for all compounds.

11.5.2 Add results which pass the specification in 11.5.1.2 to initial (Section 8.2) and previous on-going data. Update QC charts to form a graphic representation of laboratory performance (Figure 7). Develop a statement of accuracy for each pollutant and labeled compound by calculating the average percentage recovery (R) and the standard deviation of percent recovery (s_r). Express the accuracy as a recovery interval from $R-2s_r$ to $R + 2s_r$. For example, if R = 95% and s_r = 5%, the accuracy is 85–105 percent.

12. Qualitative Determination—Accomplished by Comparison of Data from Analysis of a Sample or Blank with Data from Analysis of the Shift Standard (Section 11.1). Identification is Confirmed When Spectra and Retention Times Agree Per the Criteria Below

12.1 Labeled compounds and pollutants having no labeled analog:

12.1.1 The signals for all characteristic masses stored in the spectral library (Section 7.2.4) shall be present and shall maximize within the same two consecutive scans.

12.1.2 Either (1) the background corrected EICP areas, or (2) the corrected relative intensities of the mass spectral peaks at the GC peak maximum shall agree within a factor of two (0.5 to 2 times) for all masses stored in the library.

12.1.3 The retention time relative to the nearest eluted internal standard shall be within ±7 scans or ±20 seconds, whichever is greater.

12.2 Pollutants having a labeled analog:

12.2.1 The signals for all characteristic masses stored in the spectral library (Section 7.2.4) shall be present and shall maximize within the same two consecutive scans.

12.2.2 Either (1) the background corrected EICP areas, or (2) the corrected relative intensities of the mass spectral peaks at the GC peak maximum shall agree within a factor of two for all masses stored in the spectral library.

12.2.3 The retention time difference between the pollutant and its labeled analog shall agree within ±2 scans or ±6 seconds (whichever is greater) of this difference in the shift standard (Section 11.1).

12.3 Masses present in the experimental mass spectrum that are not present in the reference mass spectrum shall be accounted for by contaminant or background ions. If the experimental mass spectrum is contaminated, an experienced spectrometrist (Section 1.4) is to determine the presence or absence of the compound.

13. Quantitative Determination

13.1 Isotope dilution—by adding a known amount of a labeled compound to every sample prior to purging, correction for recovery of the pollutant can be made because the pollutant and its labeled analog exhibit the same effects upon purging, desorption, and gas chromatography. Relative response (RR) values for sample mixtures are used in conjunction with calibration curves described in Section 7.4 to determine concentrations directly, so long as labeled compound spiking levels are constant. For the toluene example given in Figure 6 (Section 7.4.3), RR would be equal to 1.174. For this RR value, the toluene calibration curve given in Figure 5 indicates a concentration of 31.8 μg/L.

13.2 Internal standard—calculate the concentration using the response factor determined from calibration data (Section 7.5) and the following equation:

Concentration = $(A_s \times C_{is})/(A_{is} \times RF)$ where the terms are as defined in Section 7.5.1.

13.3 If the EICP area at the quantitation mass for any compound exceeds the calibration range of the system, the sample is diluted by successive factors of 10 and these dilutions are analyzed until the area is within the calibration range.

13.4 Report results for all pollutants and labeled compounds (Table 1) found in all standards, blanks, and samples, in µg/L to three significant figures. Results for samples which have been diluted are reported at the least dilute level at which the area at the quantitation mass is within the calibration range (Section 13.3) and the labeled compound recovery is within the normal range for the Method (Section 14.2).

14. Analysis of Complex Samples

14.1 Untreated effluents and other samples frequently contain high levels (>1000 µg/L) of the compounds of interest and of interfering compounds. Some samples will foam excessively when purged; others will overload the trap/or GC column.

14.2 Dilute 0.5 mL of sample with 4.5 mL of reagent water and analyze this diluted sample when labeled compound recovery is outside the range given in Table 5. If the recovery remains outside of the range for this diluted sample, the aqueous performance standard shall be analyzed (Section 11) and calibration verified (Section 11.5). If the recovery for the labeled compmund in the aqueous performance standard is outside the range given in Table 5, the analytical system is out of control. In this case, the instrumelt shall be repaired, the performance specifications in Section 11 shall be met, and the analysis of the undiluted sample shall be repeated. If the recovery for the aqueous performance standard is within the range given in Table 5, the method does not work on the sample being analyzed and the result may not be reported for regulatory compliance purposes.

14.3 Reverse search computer programs can misinterpret the spectrum of chromatographically unresolved pollutant and labeled compound pairs with overlapping spectra when a high level of the pollutant is present. Examine each chromatogram for peaks greater than the height of the internal standard peaks. These peaks can obscure the compounds of interest.

15. Method Performance

15.1 The specifications for this method were taken from the inter-laboratory validation of EPA Method 624 (reference 9). Method 1624 has been shown to yield slightly better performance on treated effluents than Method 624. Additional method performance data can be found in Reference 10.

References

1. ''Performance Tests for the Evaluation of Computerized Gas Chromatography/Mass Spectrometry Equipment and Laboratories,'' USEPA, EMSL/Cincinnati, OH 45268, EPA–600/4–80–025 (April 1980).

2. Bellar, T.A. and Lichtenberg, J.J., ''Journal American Water Works Association,'' *66*, 739 (1974).

3. Bellar, T.A. and Lichtenberg, J.J., ''Semi-automated Headspace Analysis of Drinking Waters and Industrial Waters for Purgeable Volatile Organic Compounds,'' in *Measurement of Organic Pollutants Water and Wastewater*, C.E. VanHall, ed., American Society for Testing Materials, Philadelphia, PA, Special Technical Publication 686, (1978).

4. ''Working with Carcinogens,'' DHEW, PHS, NIOSH, Publication 77–206 (1977).

5. ''OSHA Safety and Health Standards, General Industry,'' 29 CFR part 1910, OSHA 2206, (1976).

6. ''Safety in Academic Chemistry Laboratories,'' American Chemical Society Publication, Committee on Chemical Safety (1979).

7. ''Handbook of Analytical Quality Control in Water and Wastewater Laboratories,'' USEPA, EMSL/Cincinnati, OH 45268, EPA–4–79–019 (March 1979).

8. ''Methods 330.4 and 330.5 for Total Residual Chlorine,'' USEPA, EMSL/Cincinnati, OH 45268, EPA–4–79–020 (March 1979).

9. ''EPA Method Study 29 EPA Method 624—Purgeables,'' EPA 600/4–84–054, National Technical Information Service, PB84–209915, Springfield, Virginia 22161, June 1984.

10. ''Colby, B.N., Beimer, R.G., Rushneck, D.R., and Telliard, W.A., ''Isotope Dilution Gas Chromatography-Mass Spectrometry for the Determination of Priority Pollutants in Industrial Effluents,'' USEPA, Effluent Guidelines Division, Washington, DC 20460 (1980).

TABLE 1—VOLATILE ORGANIC COMPOUNDS ANALYZED BY ISOTOPE DILUTION GC/MS

Compound	Storet	CAS registry	EPA-EGD	NPDES
Acetone	81552	67–64–1	516 V	
Acrolein	34210	107–02–8	002 V	001 V
Acrylonitrile	34215	107–13–1	003 V	002 V
Benzene	34030	71–43–2	004 V	003 V
Bromodichloromethane	32101	75–27–4	048 V	012 V

TABLE 1—VOLATILE ORGANIC COMPOUNDS ANALYZED BY ISOTOPE DILUTION GC/MS—Continued

Compound	Storet	CAS registry	EPA-EGD	NPDES
Bromoform	32104	75–25–2	047 V	005 V
Bromomethane	34413	74–83–9	046 V	020 V
Carbon tetrachloride	32102	56–23–5	006 V	006 V
Chlorobenzene	34301	108–90–7	007 V	007 V
Chloroethane	34311	75–00–3	016 V	009 V
2-chloroethylvinyl ether	34576	110–75–8	019 V	010 V
Chloroform	32106	67–66–1	023 V	011 V
Chloromethane	34418	74–87–3	045 V	021 V
Dibromochloromethane	32105	124–48–1	051 V	008 V
1,1-dichloroethane	34496	75–34–3	013 V	014 V
1,2-dichloroethane	34536	107–06–2	010 V	015 V
1,1-dichloroethene	34501	75–35–4	029 V	016 V
Trans-1,2-dichloroethane	34546	156–60–5	030 V	026 V
1,2-dichloropropane	34541	78–87–5	032 V	017 V
Cis-1,3-dichloropropene	34704	10061–01–5		
Trans-1,3-dichloropropene	34699	10061–02–6	033 V	
Diethyl ether	81576	60–29–7	515 V	
P-dioxane	81582	123–91–1	527 V	
Ethylbenzene	34371	100–41–4	038 V	019 V
Methylene chloride	34423	75–09–2	044 V	022 V
Methyl ethyl ketone	81595	78–93–3	514 V	
1,1,2,2-tetrachloroethane	34516	79–34–5	015 V	023 V
Tetrachlorethene	34475	127–18–4	085 V	024 V
Toluene	34010	108–88–3	086 V	025 V
1,1,1-trichloroethane	34506	71–55–6	011 V	027 V
1,1,2-trichloroethane	34511	79–00–5	014 V	028 V
Trichloroethene	39180	79–01–6	087 V	029 V
Vinyl chloride	39175	75–01–4	088 V	031 V

TABLE 2—GAS CHROMATOGRAPHY OF PURGEABLE ORGANIC COMPOUNDS BY ISOTOPE DILUTION GC/MS

EGD No. (1)	Compound	Ref EGD No.	Mean retention time (sec)	Minimum level (2) (µg/L)
181	Bromochloromethane (I.S.)	181	730	10
245	Chloromethane-d3	181	147	50
345	Chloromethane	245	148	50
246	Bromomethane-d3	181	243	50
346	Bromomethane	246	246	50
288	Vinyl chloride-d3	181	301	50
388	Vinyl chloride	288	304	10
216	Chloroethane-d5	181	378	50
316	Chloroethane	216	386	50
244	Methylene chloride-d2	181	512	10
344	Methylene chloride	244	517	10
616	Acetone-d6	181	554	50
716	Acetone	616	565	50
002	Acrolein	181	566	50
203	Acrylonitrile-d3	181	606	50
303	Acrylonitrile	203	612	50
229	1,1-dichloroethene-d2	181	696	10
329	1,1-dichloroethene	229	696	10
213	1,1-dichloroethane-d3	181	778	10
313	1,1-dichloroethane	213	786	10
615	Diethyl ether-d10	181	804	50
715	Diethyl ether	615	820	50
230	Trans-1,2-dichloroethene-d2	181	821	10
330	Trans-1,2-dichloroethene	230	821	10
614	Methyl ethyl ketone-d3	181	840	50
714	Methyl ethyl ketone	614	848	50
223	Chloroform-13C1	181	861	10
323	Chloroform	223	861	10
210	1,2-dichloroethane-d4	181	901	10
310	1,2-dichloroethane	210	910	10

TABLE 2—GAS CHROMATOGRAPHY OF PURGEABLE ORGANIC COMPOUNDS BY ISOTOPE DILUTION GC/MS—Continued

EGD No. (1)	Compound	Ref EGD No.	Mean retention time (sec)	Minimum level (2) (µg/L)
211	1,1,1-trichloroethane-13C2	181	989	10
311	1,1,1-trichloroethane	211	999	10
527	p-dioxane	181	1001	10
206	Carbon tetrachloride-13C1	182	1018	10
306	Carbon tetrachloride	206	1018	10
248	Bromodichloromethane-13C1	182	1045	10
348	Bromodichloromethane	248	1045	10
232	1,2-dichloropropane-d6	182	1123	10
332	1.2-dichloropropane	232	1134	10
233	Trans-1,3-dichloropropene-d4	182	1138	10
333	Trans-1,3-dichloropropene	233	1138	10
287	Trichloroethene-13C1	182	1172	10
387	Trichloroethene	287	1187	10
204	Benzene-d6	182	1200	10
304	Benzene	204	1212	10
251	Chlorodibromemethane-13C1	182	1222	10
351	Chlorodibromomethane	251	1222	10
214	1,1,2-trichloroethane-13C2	182	1224	10
314	1,1,2-trichloroethane	214	1224	10
019	2-chloroethylvinyl ether	182	1278	10
182	2-bromo-1-chloropropane (I.S.)	182	1306	10
247	Bromoform-13C1	182	1386	10
347	Bromoform	247	1386	10
215	1,1,2,2-tetrachloroethane-d2	183	1525	10
315	1,1,2,2-tetrachloroethane	215	1525	10
285	Tetrachloroethene-13C2	183	1528	10
385	Tetrachloroethene	285	1528	10
183	1,4-dichlorobutale (int std)	183	1555	10
286	Toluene-d8	183	1603	10
386	Toluene	286	1619	10

TABLE 2—GAS CHROMATOGRAPHY OF PURGEABLE ORGANIC COMPOUNDS BY ISOTOPE DILUTION GC/MS—Continued

EGD No. (1)	Compound	Ref EGD No.	Mean retention time (sec)	Minimum level (2) (µg/L)
207	Chlorobenzene-d5	183	1679	10
307	Chlorobenzene	207	1679	10
238	Ethylbenzene-d10	183	1802	10
338	Ethylbenzene	238	1820	10
185	Bromofluorobenzene	183	1985	10

(1) Reference numbers beginning with 0, 1 or 5 indicate a pollutant quantified by the internal standard method; reference numbers beginning with 2 or 6 indicate a labeled compound quantified by the internal standard method; reference numbers beginning with 3 or 7 indicate a pollutant quantified by isotope dilution.

(2) This is a minimum level at which the analytical system shall give recognizable mass spectra (background corrected) and acceptable calibration points. Column: 2.4m (8 ft) × 2 mm i.d. glass, packed with one percent SP–1000 coated on 60/80 Carbopak B. Carrier gas: helium at 40 mL/min. Temperature program: 3 min at 45 °C, 8 °C per min to 240 °C, hold at 240 °C for 15 minutes.

NOTE: The specifications in this table were developed from data collected from three wastewater laboratories.

TABLE 3—BFB MASS-INTENSITY SPECIFICATIONS

Mass	Intensity required
50	15 to 40 percent of mass 95.
75	30 to 60 percent of mass 95.
95	base peak, 100 percent.
96	5 to 9 percent of mass 95.
173	<2 percent of mass 174.
174	>50 percent of mass 95.
175	5 to 9 percent of mass 174
176	95 to 101 percent of mass 174
177	5 to 9 percent of mass 176.

TABLE 4—VOLATILE ORGANIC COMPOUND CHARACTERISTIC MASSES

Labeled compound	Analog	Primary m/z's
Acetone	d6	58/64
Acrolein	d2	56/58
Acrylonitrile	d3	53/56
Benzene	d6	78/84
Bromodichloromethane	13C	83/86
Bromoform	13C	173/176
Bromomethale	d3	96/99
Carbon tetrachloride	13C	47/48
Chlorobenzene	d5	112/117
Chloroethane	d5	64/71
2-chloroethylvinyl ether	d7	106/113
Chloroform	13C	85/86
Chloromethane	d3	50/53
Dibromochloromethane	13C	129/130
1,1-dichloroethane	d3	63/66
1,2-dichloroethane	d4	62/67
1,1-dichloroethene	d2	61/65
Trans-1,2-dichloroethene	d2	61/65
1,2-dichloropropane	d6	63/67
Cis-1,3-dichloropropene	d4	75/79
Trans-1,3-dichloropropene	d4	75/79
Diethyl ether	d10	74/84
p-dioxane	d8	88/96
Ethylbenzene	d10	106/116
Methylene chloride	d2	84/88
Methyl ethyl ketone	d3	72/75
1,1,2,2-tetrachloroethane	d2	83/84
Tetrachloroethene	13C2	166/172
Toluene	d8	92/99
1,1,1-trichloroethane	d3	97/102
1,1,2-trichloroethane	13C2	83/84
Trichloroethene	13C	95/133
Vinyl chloride	d3	62/65

TABLE 5—ACCEPTANCE CRITERIA FOR PERFORMANCE TESTS

Compound	Acceptance criteria at 20 µg/L			
	Initial precision and accuracy section 8.2.3		Labeled compound recovery sec. 8.3 and 14.2	On-going accuracy sec. 11.5
	s (µg/L)	$\bar{X}$ (µg/L)	P (percent)	R (µg/L)
Acetone	Note 1			
Acrolein	Note 2			
Acrylonitrile	Note 2			
Benzene	9.0	13.0–28.2	ns–196	4–33
Bromodichloromethane	8.2	6.5–31.5	ns–199	4–34
Bromoform	7.0	7.4–35.1	ns–214	6–36
Bromomethane	25.0	d–54.3	ns–414	d–61
Carbon tetrachloride	6.9	15.9–24.8	42–165	12–30
Chlorobenzene	8.2	14.2–29.6	ns–205	4–35
Chloroethane	14.8	2.1–46.7	ns–308	d–51
2–chloroethylvinyl ether	36.0	d–69.8	ns–554	d–79
Chloroform	7.9	11.6–26.3	18–172	8–30
Chloromethane	26.0	d–55.5	ns–410	d–64
Dibromochloromethane	7.9	11.2–29.1	16–185	8–32
1,1-dichloroethane	6.7	11.4–31.4	23–191	9–33
1,2-dichloroethane	7.7	11.6–30.1	12–192	8–33
1,1-dichloroethene	11.7	d–49.8	ns–315	d–52
Trans-1,2–dichloroethene	7.4	10.5–31.5	15–195	8–34

TABLE 5—ACCEPTANCE CRITERIA FOR PERFORMANCE TESTS—Continued

Compound	Acceptance criteria at 20 μg/L			
	Initial precision and accuracy section 8.2.3		Labeled compound recovery sec. 8.3 and 14.2	On-going accuracy sec. 11.5
	s (μg/L)	$\bar{X}$ (μg/L)	P (percent)	R (μg/L)
1,2-dichloropropane	19.2	d–46.8	ns–343	d–51
Cis–1,3–dichloropropene	22.1	d–51.0	ns–381	d–56
Trans–1,3–dichloropropene	14.5	d–40.2	ns–284	d–44
Diethyl ether	Note 1			
P-dioxane	Note 1			
Ethyl benzene	9.6	15.6–28.5	ns–203	5–35
Methylene chloride	9.7	d–49.8	ns–316	d–50
Methyl ethyl ketone	Note 1			
1,1,2,2-tetrachloroethane	9.6	10.7–30.0	5–199	7–34
Tetrachloroethene	6.6	15.1–28.5	31–181	11–32
Toluene	6.3	14.5–28.7	4–193	6–33
1,1,1-trichloroethane	5.9	10.5–33.4	12–200	8–35
1,1,2-trichloroethane	7.1	11.8–29.7	21–184	9–32
Trichloroethene	8.9	16.6–29.5	35–196	12–34
Vinyl chloride	27.9	d–58.5	ns–452	d–65

d = detected; result must be greater than zero.
ns = no specification; limit would be below detection limit.
Note 1: Specifications not available for these compounds at time of release of this method.
Note 2: Specifications not developed for these compounds; use method 603.

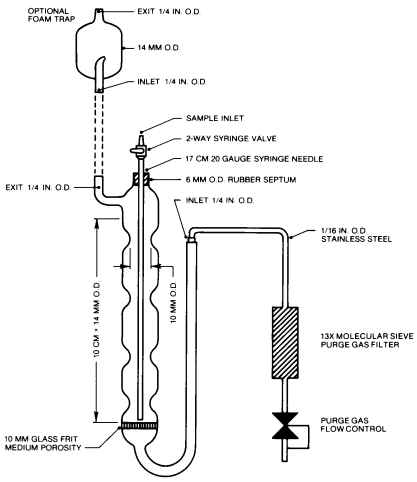

FIGURE 1 Purging Device.

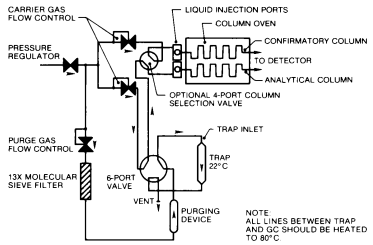

FIGURE 3 Schematic of Purge and Trap Device—Purge Mode.

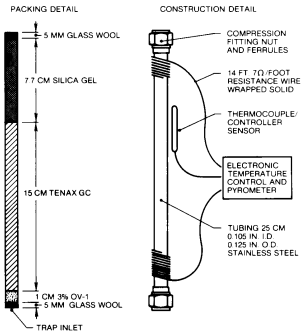

FIGURE 2 Trap Packings and Construction to Include Desorb Capability.

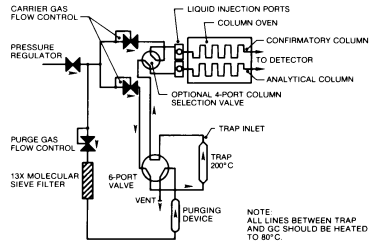

FIGURE 4 Schematic of Purge and Trap Device—Desorb Mode.

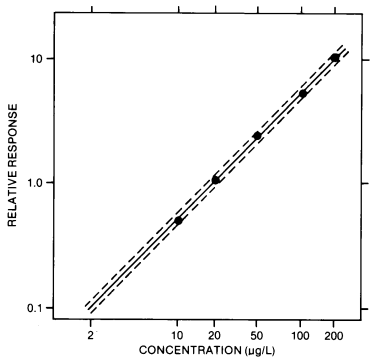

FIGURE 5 Relative Response Calibration Curve for Toluene. The Dotted Lines Enclose a ±10 Percent Error Window.

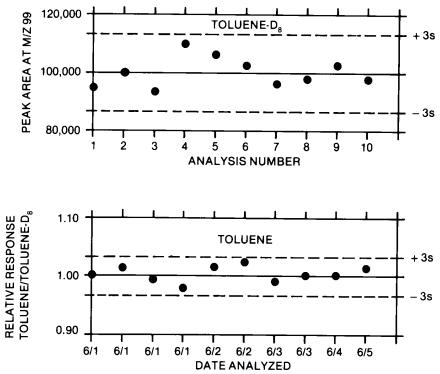

FIGURE 7 Quality Control Charts Showing Area (top graph) and Relative Response of Toluene to Toluene-d_8 (lower graph) Plotted as a Function of Time or Analysis Number.

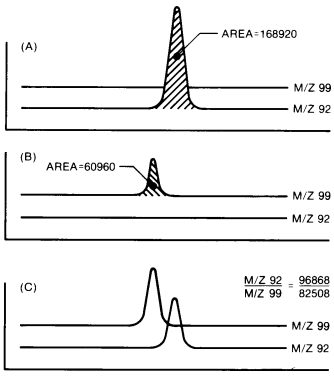

FIGURE 6 Extracted Ion Current Profiles for (A) Toluene, (B) Toluene-d_8, and a Mixture of Toluene and Toluene-d_8.

METHOD 1625 REVISION B—SEMIVOLATILE ORGANIC COMPOUNDS BY ISOTOPE DILUTION GC/MS

1. Scope and Application

1.1 This method is designed to determine the semivolatile toxic organic pollutants associated with the 1976 Consent Decree and additional compounds amenable to extraction and analysis by capillary column gas chromatography-mass spectrometry (GC/MS).

1.2 The chemical compounds listed in Tables 1 and 2 may be determined in municipal and industrial discharges by this method. The method is designed to meet the survey

requirements of Effluent Guidelines Division (EGD) and the National Pollutants Discharge Elimination System (NPDES) under 40 CFR 136.1. Any modifications of this method, beyond those expressly permitted, shall be considered as major modifications subject to application and approval of alternate test procedures under 40 CFR 136.4 and 136.5.

1.3 The detection limit of this method is usually dependent on the level of interferences rather than instrumental limitations. The limits listed in Tables 3 and 4 represent the minimum quantity that can be detected with no interferences present.

1.4 The GC/MS portions of this method are for use only by analysts experienced with GC/MS or under the close supervision of such qualified persons. Laboratories unfamiliar with analyses of environmental samples by GC/MS should run the performance tests in reference 1 before beginning.

2. *Summary of Method*

2.1 Stable isotopically labeled analogs of the compounds of interest are added to a one liter wastewater sample. The sample is extracted at pH 12–13, then at pH <2 with methylene chloride using continuous extraction techniques. The extract is dried over sodium sulfate and concentrated to a volume of one mL. An internal standard is added to the extract, and the extract is injected into the gas chromatograph (GC). The compounds are separated by GC and detected by a mass spectrometer (MS). The labeled compounds serve to correct the variability of the analytical technique.

2.2 Identification of a compound (qualitative analysis) is performed by comparing the GC retention time and background corrected characteristic spectral masses with those of authentic standards.

2.3 Quantitative analysis is performed by GC/MS using extracted ion current profile (EICP) areas. Isotope dilution is used when labeled compounds are available; otherwise, an internal standard method is used.

2.4 Quality is assured through reproducible calibration and testing of the extraction and GC/MS systems.

3. *Contamination and Interferences*

3.1 Solvents, reagents, glassware, and other sample processing hardware may yield artifacts and/or elevated baselines causing misinterpretation of chromatograms and spectra. All materials shall be demonstrated to be free from interferences under the conditions of analysis by running method blanks initially and with each sample lot (samples started through the extraction process on a given 8 hr shift, to a maximum of 20). Specific selection of reagents and purification of solvents by distillation in all-glass systems may be required. Glassware and, where possible, reagents are cleaned by solvent rinse and baking at 450 °C for one hour minimum.

3.2 Interferences coextracted from samples will vary considerably from source to source, depending on the diversity of the industrial complex or municipality being samples.

4. *Safety*

4.1 The toxicity or carcinogenicity of each compound or reagent used in this method has not been precisely determined; however, each chemical compound should be treated as a potential health hazard. Exposure to these compounds should be reduced to the lowest possible level. The laboratory is responsible for maintaining a current awareness file of OSHA regulations regarding the safe handling of the chemicals specified in this method. A reference file of data handling sheets should also be made available to all personnel involved in these analyses. Additional information on laboratory safety can be found in references 2–4.

4.2 The following compounds covered by this method have been tentatively classified as known or suspected human or mammalian carcinogens: benzidine benzo(a)anthracene, 3,3′-dichlorobenzidine, benzo(a)pyrene, dibenzo(a,h)anthracene, N-nitrosodimethylamine, and β-naphtylamine. Primary standards of these compounds shall be prepared in a hood, and a NIOSH/MESA approved toxic gas respirator should be worn when high concentrations are handled.

5. *Apparatus and Materials*

5.1 Sampling equipment for discrete or composite sampling.

5.1.1 Sample bottle, amber glass, 1.1 liters minimum. If amber bottles are not available, samples shall be protected from light. Bottles are detergent water washed, then solvent rinsed or baked at 450 °C for one hour minimum before use.

5.1.2 Bottle caps—threaded to fit sample bottles. Caps are lined with Teflon. Aluminum foil may be substituted if the sample is not corrosive. Liners are detergent water washed, then reagent water (Section 6.5) and solvent rinsed, and baked at approximately 200 °C for one hour minimum before use.

5.1.3 Compositing equipment—automatic or manual compositing system incorporating glass containers for collection of a minimum 1.1 liters. Sample containers are kept at 0 to 4 °C during sampling. Glass or Teflon tubing only shall be used. If the sampler uses a peristaltic pump, a minimum length of compressible silicone rubber tubing may be used in the pump only. Before use, the tubing is thoroughly rinsed with methanol, followed by repeated rinsings with reagent water (Section 6.5) to minimize sample contamination. An integrating flow meter is used to collect proportional composite samples.

5.2 Continuous liquid-liquid extractor—Teflon or glass conncecting joints and stopcocks without lubrication (Hershberg-Wolf Extractor) one liter capacity, Ace Glass 6841–10, or equivalent.

5.3 Drying column—15 to 20 mm i.d. Pyrex chromatographic column equipped with coarse glass frit or glass wool plug.

5.4 Kuderna-Danish (K-D) apparatus

5.4.1 Concentrator tube—10mL, graduated (Kontes K–570050–1025, or equivalent) with calibration verified. Ground glass stopper (size 19/22 joint) is used to prevent evaporation of extracts.

5.4.2 Evaporation flask—500 mL (Kontes K–570001–0500, or equivalent), attached to concentrator tube with springs (Kontes K–662750–0012).

5.4.3 Snyder column—three ball macro (Kontes K–503000–0232, or equivalent).

5.4.4 Snyder column—two ball micro (Kontes K–469002–0219, or equivalent).

5.4.5 Boiling chips—approx 10/40 mesh, extracted with methylene chloride and baked at 450 °C for one hr minimum.

5.5 Water bath—heated, with concentric ring cover, capable of temperature control ±2 °C, installed in a fume hood.

5.6 Sample vials—amber glass, 2–5 mL with Teflon-lined screw cap.

5.7 Analytical balance—capable of weighing 0.1 mg.

5.8 Gas chromatograph—shall have splitless or on-column injection port for capillary column, temperature program with 30 °C hold, and shall meet all of the performance specifications in Section 12.

5.8.1 Column—30 ±5 m × 0.25 ±0.02 mm i.d. 5% phenyl, 94% methyl, 1% vinyl silicone bonded phase fused silica capillary column (J & W DB–5, or equivalent).

5.9 Mass spectrometer—70 eV electron impact ionization, shall repetitively scan from 35 to 450 amu in 0.95 to 1.00 second, and shall produce a unit resolution (valleys between m/z 441–442 less than 10 percent of the height of the 441 peak), backgound corrected mass spectrum from 50 ng decafluorotriphenylphosphine (DFTPP) introduced through the GC inlet. The spectrum shall meet the mass-intensity criteria in Table 5 (reference 5). The mass spectrometer shall be interfaced to the GC such that the end of the capillary column terminates within one centimeter of the ion source but does not intercept the electron or ion beams. All portions of the column which connect the GC to the ion source shall remain at or above the column temperature during analysis to preclude condensation of less volatile compounds.

5.10 Data system—shall collect and record MS data, store mass-intensity data in spectral libraries, process GC/MS data, generate reports, and shall compute and record response factors.

5.10.1 Data acquisition—mass spectra shall be collected continuously throughout the analysis and stored on a mass storage device.

5.10.2 Mass spectral libraries—user created libraries containing mass spectra obtained from analysis of authentic standards shall be employed to reverse search GC/MS runs for the compounds of interest (Section 7.2).

5.10.3 Data processing—the data system shall be used to search, locate, identify, and quantify the compounds of interest in each GC/MS analysis. Software routines shall be employed to compute retention times and peak areas. Displays of spectra, mass chromatograms, and library comparisons are required to verify results.

5.10.4 Response factors and multipoint calibrations—the data system shall be used to record and maintain lists of response factors (response ratios for isotope dilution) and multipoint calibration curves (Section 7). Computations of relative standard deviation (coefficient of variation) are useful for testing calibration linearity. Statistics on initial (Section 8.2) and on-going (Section 12.7) performance shall be computed and maintained.

6. Reagents and Standards

6.1 Sodium hydroxide—reagent grade, 6N in reagent water.

6.2 Sulfuric acid—reagent grade, 6N in reagent water.

6.3 Sodium sulfate—reagent grade, granular anhydrous, rinsed with methylene chloride (20 mL/g) and conditioned at 450 °C for one hour minimum.

6.4 Methylene chloride—distilled in glass (Burdick and Jackson, or equivalent).

6.5 Reagent water—water in which the compounds of interest and interfering compounds are not detected by this method.

6.6 Standard solutions—purchased as solutions or mixtures with certification to their purity, concentration, and authenticity, or prepared from materials of known purity and composition. If compound purity is 96 percent or greater, the weight may be used without correction to compute the concentration of the standard. When not being used, standards are stored in the dark at −20 to −10 °C in screw-capped vials with Teflon-lined lids. A mark is placed on the vial at the level of the solution so that solvent evaporation loss can be detected. The vials are brought to room temperature prior to use. Any precipitate is redissolved and solvent is added if solvent loss has occurred.

6.7 Preparation of stock solutions—prepare in methylene chloride, benzene, p-dioxane, or a mixture of these solvents per the steps below. Observe the safety precautions in Section 4. The large number of labeled and unlabeled acid, base/neutral, and Appendix C compounds used for combined

calibration (Section 7) and calibration verification (12.5) require high concentratimns (approx 40 mg/mL) when individual stock solutions are prepared, so that dilutions of mixtures will permit calibration with all compounds in a single set of solutions. The working range for most compounds is 10–200 µg/mL. Compounds with a reduced MS response may be prepared at higher concentrations.

6.7.1 Dissolve an appropriate amount of assayed reference material in a suitable solvent. For example, weigh 400 mg naphthalene in a 10 mL ground glass stoppered volumetric flask and fill to the mark with benzene. After the naphthalene is completely dissolved, transfer the solution to a 15 mL vial with Teflon-lined cap.

6.7.2 Stock standard solutions should be checked for signs of degradation prior to the preparation of calibration or performance test standards. Quality control check samples that can be used to determine the accuracy of calibration standards are available from the US Environmental Protection Agency, Environmental Monitoring and Support Laboratory, Cincinnati, Ohio 45268.

6.7.3 Stock standard solutions shall be replaced after six months, or sooner if comparison with quality control check samples indicates a change in concentration.

6.8 Labeled compound spiking solution—from stock standard solutions prepared as above, or from mixtures, prepare the spiking solution at a concentration of 200 µg/mL, or at a concentration appropriate to the MS response of each compound.

6.9 Secondary standard—using stock solutions (Section 6.7), prepare a secondary standard containing all of the compounds in Tables 1 and 2 at a concentration of 400 µg/mL, or higher concentration appropriate to the MS response of the compound.

6.10 Internal standard solution—prepare 2,2′-difluorobiphenyl (DFB) at a concentration of 10 mg/mL in benzene.

6.11 DFTPP solution—prepare at 50 µg/mL in acetone.

6.12 Solutions for obtaining authentic mass spectra (Section 7.2)—prepare mixtures of compounds at concentrations which will assure authentic spectra are obtained for storage in libraries.

6.13 Calibration solutions—combine 0.5 mL of the solution in Section 6.8 with 25, 50, 125, 250, and 500 uL of the solution in section 6.9 and bring to 1.00 mL total volume each. This will produce calibration solutions of nominal 10, 20, 50, 100, and 200 µg/mL of the pollutants and a constant nominal 100 µg/mL of the labeled compounds. Spike each solution with 10 µL of the internal standard solution (Section 6.10). These solutions permit the relative response (labeled to unlabeled) to be measured as a function of concentration (Section 7.4).

6.14 Precision and recovery standard—used for determination of initial (Section 8.2) and on-going (Section 12.7) precision and recovery. This solution shall contain the pollutants and labeled compounds at a nominal concentration of 100 µg/mL.

6.15 Stability of solutions—all standard solutions (Sections 6.8–6.14) shall be analyzed within 48 hours of preparation and on a monthly basis thereafter for signs of degradation. Standards will remain acceptable if the peak area at the quantitation mass relative to the DFB internal standard remains within ±15 percent of the area obtained in the initial analysis of the standard.

7. *Calibration*

7.1 Assemble the GC/MS and establish the operating conditions in Table 3. Analyze standards per the procedure in Section 11 to demonstrate that the analytical system meets the detection limits in Tables 3 and 4, and the mass-intensity criteria in Table 5 for 50 ng DFTPP.

7.2 Mass spectral libraries—detection and identification of compounds of interest are dependent upon spectra stored in user created libraries.

7.2.1 Obtain a mass spectrum of each pollutant, labeled compound, and the internal standard by analyzing an authentic standard either singly or as part of a mixture in which there is no interference between closely eluted components. That only a single compound is present is determined by examination of the spectrum. Fragments not attributable to the compound under study indicate the presence of an interfering compound.

7.2.2 Adjust the analytical conditions and scan rate (for this test only) to produce an undistorted spectrum at the GC peak maximum. An undistorted spectrum will usually be obtained if five complete spectra are collected across the upper half of the GC peak. Software algorithms designed to ''enhance'' the spectrum may eliminate distortion, but may also eliminate authentic masses or introduce other distortion.

7.2.3 The authentic reference spectrum is obtained under DFTPP tuning conditions (Section 7.1 and Table 5) to normalize it to spectra from other instruments.

7.2.4 The spectrum is edited by saving the 5 most intense mass spectral peaks and all other mass spectral peaks greater than 10 percent of the base peak. This edited spectrum is stored for reverse search and for compound confirmation.

7.3 Analytical range—demonstrate that 20 ng anthracene or phenanthrene produces an area at m/z 178 approx one-tenth that required to exceed the linear range of the system. The exact value must be determined by experience for each instrument. It is used to match the calibration range of the instrument to the analytical range and detection limits required, and to diagnose instrument

sensitivity problems (Section 15.4). The 20 ug/mL calibration standard (Section 6.13) can be used to demonstrate this performance.

7.3.1 Polar compound detection—demonstrate that unlabeled pentachlorophenol and benzidine are detectable at the 50 µg/mL level (per all criteria in Section 13). The 50 µg/mL calibration standard (Section 6.13) can be used to demonstrate this performance.

7.4 Calibration with isotope dilution—isotope dilution is used when (1) labeled compounds are available, (2) interferences do not preclude its use, and (3) the quantitation mass extracted ion current profile (EICP) area for the compound is in the calibration range. If any of these conditions preclude isotope dilution, internal standard methods (Section 7.5 or 7.6) are used.

7.4.1 A calibration curve encompassing the concentration range is prepared for each compound to be determined. The relative response (pollutant to labeled) vs concentration in standard solutions is plotted or computed using a linear regression. The example in Figure 1 shows a calibration curve for phenol using phenol-d5 as the isotopic diluent. Also shown are the ±10 percent error limits (dotted lines). Relative Reponse (RR) is determined according to the procedures described below. A minimum of five data points are employed for calibration.

7.4.2 The relative response of a pollutant to its labeled analog is determined from isotope ratio values computed from acquired data. Three isotope ratios are used in this process:

R_X = the isotope ratio measured for the pure pollutant.

R_y = the isotope ratio measured for the labeled compound.

R_m = the isotope ratio of an analytical mixture of pollutant and labeled compounds.

The m/z's are selected such that $R_X > R_y$. If R_m is not between $2R_y$ and $0.5R_X$, the method does not apply and the sample is analyzed by internal or external standard methods.

7.4.3 Capillary columns usually separate the pollutant-labeled pair, with the labeled compound eluted first (Figure 2). For this case, R_X = [area m_1/z]/1, at the retention time of the pollutant (RT_2). R_y = 1/[area m_2/z, at the retention time of the labeled compound RT_1). R_m = [area at m_1/z (at RT_2)]/[area at RT_1)], as measured in the mixture of the pollutant and labeled compounds (Figure 2), and RR = R_m.

7.4.4 Special precautions are taken when the pollutant-labeled pair is not separated, or when another labeled compound with interfering spectral masses overlaps the pollutant (a case which can occur with isomeric compounds). In this case, it is necessary to determine the respective contributions of the pollutant and labeled compounds to the respective EICP areas. If the peaks are separated well enough to permit the data system or operator to remove the contributions of the compounds to each other, the equations in Section 7.4.3 apply. This usually occurs when the height of the valley between the two GC peaks at the same m/z is less than 10 percent of the height of the shorter of the two peaks. If significant GC and spectral overlap occur, RR is computed using the following equation:

$RR = (R_y - R_m)(R_X + 1)/(R_m - R_X)(R_y + 1)$, where R_X is measured as shown in Figure 3A, R_y is measured as shown in Figure 3B, and R_m is measured as shown in Figure 3C. For example, R_X = 46100/4780 = 9.644, R_y = 2650/43600 = 0.0608, R_m = 49200/48300 = 1.019. amd RR = 1.114.

7.4.5 To calibrate the analytical system by isotope dilution, analyze a 1.0 µL aliquot of each of the calibration standards (Section 6.13) using the procedure in Section 11. Compute the RR at each concentration.

7.4.6 Linearity—if the ratio of relative response to concentration for any compound is constant (less than 20 percent coefficient of variation) over the 5 point calibration range, and averaged relative response/concentration ratio may be used for that compound; otherwise, the complete calibration curve for that compound shall be used over the 5 point calibration range.

7.5 Calibration by internal standard—used when criteria for istope dilution (Section 7.4) cannot be met. The internal standard to be used for both acid and base/neutral analyses is 2,2′–difluorobiphenyl. The internal standard method is also applied to determination of compounds having no labeled analog, and to measurement of labeled compounds for intra-laboratory statistics (Sections 8.4 and 12.7.4).

7.5.1 Response factors—calibration requires the determination of response factors (RF) which are defined by the following equation:

$RF = (A_s \times C_{is})/(A_{is} \times C_s)$, where

A_s is the area of the characteristic mass for the compmund in the daily standard

A_{is} is the area of the characteristic mass for the internal standard

C_{is} is the concentration of the internal standard (µg/mL)

C_s is the concentration of the compound in the daily standard (µg/mL)

7.5.1.1 The response factor is determined for at least five concentrations appropriate to the response of each compound (Section 6.13); nominally, 10, 20, 50, 100, and 200 µg/mL. The amount of internal standard added to each extract is the same (100 µg/mL) so that C_{is} remains constant. The RF is plotted vs concentration for each compound in the standard (C_s) to produce a calibration curve.

7.5.1.2 Linearity—if the response factor (RF) for any compound is constant (less than 35 percent coefficient of variation) over the 5

point calibration range, an averaged response factor may be used for that compound; otherwise, the complete calibration curve for that compound shall be used over the 5 point range.

7.6 Combined calibration—by using calibration solutions (Section 6.13) containing the pollutants, labeled compounds, and the internal standard, a single set of analyses can be used to produce calibration curves for the isotope dilution and internal standard methods. These curves are verified each shift (Section 12.5) by analyzing the 100 µg/mL calibration standard (Section 6.13). Recalibration is required only if calibration verification (Section 12.5) criteria cannot be met.

8. Quality Assurance/Quality Control

8.1 Each laboratory that uses this method is required to operate a formal quality assurance program. The minimum requirements of this program consist of an initial demonstration of laboratory capability, analysis of samples spiked with labeled compounds to evaluate and document data quality, and analysis of standards and blanks as tests of continued performance. Laboratory performance is compared to established performance criteria to determine if the results of analyses meet the performance characteristics of the method.

8.1.1 The analyst shall make an initial demonstration of the ability to generate acceptable accuracy and precision with this method. This ability is established as described in Section 8.2.

8.1.2 The analyst is permitted to modify this method to improve separations or lower the costs of measurements, provided all performance specifications are met. Each time a modification is made to the method, the analyst is required to repeat the procedure in Section 8.2 to demonstrate method performance.

8.1.3 Analyses of blanks are required to demonstrate freedom from contamination. The procedures and criteria for analysis of a blank are described in Section 8.5.

8.1.4 The laboratory shall spike all samples with labeled compounds to monitor method performance. This test is described in Section 8.3. When results of these spikes indicate atypical method performance for samples, the samples are diluted to bring method performance within acceptable limits (Section 15).

8.1.5 The laboratory shall, on an on-going basis, demonstrate through calibration verification and the analysis of the precision and recovery standard (Section 6.14) that the analysis system is in control. These procedures are described in Sections 12.1, 12.5, and 12.7.

8.1.6 The laboratory shall maintain records to define the quality of data that is generated. Development of accuracy statements is described in Section 8.4.

8.2 Initial precision and accuracy—to establish the ability to generate acceptable precision and accuracy, the analyst shall perform the following operations:

8.2.1 Extract, concentrate, and analyze two sets of four one-liter aliquots (8 aliquots total) of the precision and recovery standard (Section 6.14) according to the procedure in Section 10.

8.2.2 Using results of the first set of four analyses, compute the average recovery ($\bar{X}$) in µg/mL and the standard deviation of the recovery (s) in θg/µL for each compound, by isotope dilution for pollutants with a labeled analog, and by internal standard for labeled compounds and pollutants with no labeled analog.

8.2.3 For each compound, compare s and $\bar{X}$ with the corresponding limits for initial precision and accuracy in Table 8. If s and $\bar{X}$ for all compounds meet the acceptance criteria, system performance is acceptable and analysis of blanks and samples may begin. If, however, any individual s exceeds the precision limit or any individual $\bar{X}$ falls outside the range for accuracy, system performance is unacceptable for that compound.

NOTE: The large number of compounds in Table 8 present a substantial probability that one or more will fail the acceptance criteria when all compounds are analyzed. To determine if the analytical system is out of control, or if the failure can be attributed to probability, proceed as follows:

8.2.4 Using the results of the second set of four analyses, compute s and $\bar{X}$ for only those compounds which failed the test of the first set of four analyses (Section 8.2.3). If these compounds now pass, system performance is acceptable for all compounds and analysis of blanks and samples may begin. If, however, any of the same compoulds fail again, the analysis system is not performing properly for these compounds. In this event, correct the problem and repeat the entire test (Section 8.2.1).

8.3 The laboratory shall spike all samples with labeled compounds to assess method performance on the sample matrix.

8.3.1 Analyze each sample according to the method in Section 10.

8.3.2 Compute the percent recovery (P) of the labeled compounds using the internal standard methmd (Section 7.5).

8.3.3 Compare the labeled compound recovery for each compound with the corresponding limits in Table 8. If the recovery of any compounds falls outside its warning limit, method performance is unacceptable for that compound in that sample, Therefore, the sample is complex and is to be diluted and reanalyzed per Section 15.4.

8.4 As part of the QA program for the laboratory, method accuracy for wastewater samples shall be assessed and records shall

be maintained. After the analysis of five wastewater samples for which the labeled compounds pass the tests in Section 8.3, compute the average percent recovery (P) and the standard deviation of the percent recovery (s_p) for the labeled compounds only. Express the accuracy assessment as a percent recovery interval from P—2 $_{sp}$ to P + 2_{sp}. For example, if P = 90% and s_p = 10%, the accuracy interval is expressed as 70–100%. Update the accuracy assessment for each compound on a regular basis (e.g. after each 5–10 new accuracy measurements).

8.5 Blanks—reagent water blanks are analyzed to demonstrate freedom from contamination.

8.5.1 Extract and concentrate a blank with each sample lot (samples started through the extraction process on the same 8 hr shift, to a maximum of 20 samples). Analyze the blank immediately after analysis of the precision and recovery standard (Section 6.14) to demonstrate freedom from contamination.

8.5.2 If any of the compounds of interest (Tables 1 and 2) or any potentially interfering compound is found in a blank at greater than 10 µg/L (assuming a response factor of 1 relative to the internal standard for compounds not listed in Tables 1 and 2), analysis of samples is halted until the source of contamination is eliminated and a blank shows no evidence of contamination at this level.

8.6 The specifications contained in this method can be met if the apparatus used is calibrated properly, then maintained in a calibrated state. The standards used for calibration (Section 7), calibration verification (Section 12.5), and for initial (Section 8.2) and on-going (Section 12.7) precision and recovery should be identical, so that the most precise results will be obtained. The GC/MS instrument in particular will provide the most reproducible results if dedicated to the settings and conditions required for the analysis of semi-volatiles by this method.

8.7 Depending on specific program requirements, field replicates may be collected to determine the precision of the sampling technique, and spiked samples may be required to determine the accuracy of the analysis when internal or external standard methods are used.

9. Sample Collection, Preservation, and Handling

9.1 Collect samples in glass containers following conventional sampling practices (Reference 7). Composite samples are collected in refrigerated glass containers (Section 5.1.3) in accordance with the requirements of the sampling program.

9.2 Maintain samples at 0–4 °C from the time collectimn until extraction. If residual chlorine is present, add 80 mg sodium thiosulfate per liter of water. EPA Methods 330.4 and 330.5 may be used to measure residual chlorine (Reference 8).

9.3 Begin sample extraction within seven days of collection, and analyze all extracts within 40 days of extraction.

10. Sample Extraction and Concentration (See Figure 4)

10.1 Labeled compound spiking—measure 1.00 ±0.01 liter of sample into a glass container. For untreated effluents, and samples which are expected to be difficult to extract and/or concentrate, measure an additional 10.0 ±0.1 mL and dilute to a final volume of 1.00 ±0.01 liter with reagent water in a glass container.

10.1.1 For each sample or sample lot (to a maximum of 20) to be extracted at the same time, place three 1.00 ±0.10 liter aliquots of reagent water in glass containers.

10.1.2 Spike 0.5 mL of the labeled compound spiking solution (Section 6.8) into all samples and one reagant water aliquot.

10.1.3 Spike 1.0 mL of the precision and recovery standard (Section 6.14) into the two remaining reagent water aliquots.

10.1.4 Stir and equilibrate all solutions for 1–2 hr.

10.2 Base/neutral extraction—place 100–150 mL methylene chloride in each continuous extractor and 200–300 in each distilling flask.

10.2.1 Pour the sample(s), blank, and standard aliquots into the extractors. Rinse the glass containers with 50–100 mL methylene chloride and add to the respective extractor.

10.2.2 Adjust the pH of the waters in the extractors to 12–13 with 6N NaOH while monitoring with a pH meter. Begin the extraction by heating the flask until the methylene chloride is boiling. When properly adjusted, 1–2 drops of methylene chloride per second will fall from the condensor tip into the water. After 1–2 hours of extraction, test the pH and readjust to 12–13 if required. Extract for 18–24 hours.

10.2.3 Remove the distilling flask, estimate and record the volume of extract (to the nearest 100 mL), and pour the contents through a drying column containing 7 to 10 cm anhydrous sodium sulfate. Rinse the distilling flask with 30–50 mL of methylene chloride and pour through the drying column. Collect the solution in a 500 mL K-D evaporator flask equipped with a 10 mL concentrator tube. Seal, label as the base/neutral fraction, and concentrate per Sections 10.4 to 10.5.

10.3 Acid extraction—adjust the pH of the waters in the extractors to 2 or less using 6N sulfuric acid. Charge clean distilling flasks with 300–400 mL of methylene chloride. Test and adjust the pH of the waters after the first 1–2 hr of extraction. Extract for 18–24 hours.

10.3.1 Repeat Section 10.2.3, except label as the acid fraction.

10.4 Concentration—concentrate the extracts in separate 500 mL K-D flasks equipped with 10 mL concentrator tubes.

10.4.1 Add 1 to 2 clean boiling chips to the flask and attach a three-ball macro Snyder column. Prewet the column by adding approximately one mL of methylene chloride through the top. Place the K-D apparatus in a hot water bath so that the entire lower rounded surface of the flask is bathed with steam. Adjust the vertical position of the apparatus and the water temperature as required to complete the concentration in 15 to 20 minutes. At the proper rate of distillation, the balls of the column will actively chatter but the chambers will not flood. When the liquid has reached an apparent volume of 1 mL, remove the K-D apparatus from the bath and allow the solvent to drain and cool for at least 10 minutes. Remove the Snyder column and rinse the flask and its lower joint into the concentrator tube with 1–2 mL of methylene chloride. A 5-mL syringe is recommended for this operation.

10.4.2 For performance standards (Sections 8.2 and 12.7) and for blanks (Section 8.5), combine the acid and base/neutral extracts for each at this point. Do not combine the acid and base/neutral extracts for samples.

10.5 Add a clean boiling chip and attach a two ball micro Snyder column to the concentrator tube. Prewet the column by adding approx 0.5 mL methylene chloride through the top. Place the apparatus in the hot water bath. Adjust the vertical position and the water temperature as required to complete the concentration in 5–10 minutes. At the proper rate of distillation, the balls of the column will actively chatter but the chambers will not flood. When the liquid reaches an apparent volume of approx 0.5 mL, remove the apparatus from the water bath and allow to drain and cool for at least 10 minutes. Remove the micro Snyder column and rinse its lower joint into the concentrator tube with approx 0.2 mL of methylene chloride. Adjust the final volume to 1.0 mL.

10.6 Transfer the concentrated extract to a clean screw-cap vial. Seal the vial with a Teflon-lined lid, and mark the level on the vial. Label with the sample number and fraction, and store in the dark at −20 to −10 °C until ready for analysis.

11. GC/MS Analysis

11.1 Establish the operating conditions given in Table 3 or 4 for analysis of the base/neutral or acid extracts, respectively. For analysis of combined extracts (Section 10.4.2), use the operating conditions in Table 3.

11.2 Bring the concentrated extract (Section 10.6) or standard (Sections 6.13 through 6.14) to room temperature and verify that any precipitate has redissolved. Verify the level on the extract (Sections 6.6 and 10.6) and bring to the mark with solvent if required.

11.3 Add the internal standard solution (Section 6.10) to the extract (use 1.0 uL of solution per 0.1 mL of extract) immediately prior to injection to minimize the possibility of loss by evaporation, adsorption, or reaction. Mix thoroughly.

11.4 Inject a volume of the standard solution or extract such that 100 ng of the internal standard will be injected, using on-column or splitless injection. For 1 mL extracts, this volume will be 1.0 uL. Start the GC column initial isothermal hold upon injection. Start MS data collection after the solvent peak elutes. Stop data collection after the benzo (ghi) perylene or pentachlorophenol peak elutes for the base/neutral or acid fraction, respectively. Return the column to the initial temperature for analysis of the next sample.

12. System and Laboratory Performance

12.1 At the beginning of each 8 hr shift during which analyses are performed, GC/MS system performance and calibration are verified for all pollutants and labeled compounds. For these tests, analysis of the 100 µg/mL calibration standard (Section 6.13) shall be used to verify all performance criteria. Adjustment and/or recalibration (per Section 7) shall be performed until all performance criteria are met. Only after all performance criteria are met may samples, blanks, and precision and recovery standards be analyzed.

12.2 DFTPP spectrum validity—inject 1 µL of the DFTPP solution (Section 6.11) either separately or within a few seconds of injection of the standard (Section 12.1) analyzed at the beginning of each shift. The criteria in Table 5 shall be met.

12.3 Retention times—the absolute retention time of 2,2′-difluorobiphenyl shall be within the range of 1078 to 1248 seconds and the relative retention times of all pollutants and labeled compounds shall fall within the limits given in Tables 3 and 4.

12.4 GC resolution—the valley height between anthracene and phenanthrene at m/z 178 (or the analogs at m/z 188) shall not exceed 10 percent of the taller of the two peaks.

12.5 Calibration verification—compute the concentration of each pollutant (Tables 1 and 2) by isotope dilution (Section 7.4) for those compounds which have labeled analogs. Compute the concentration of each pollutant which has no labeled analog by the internal standard method (Section 7.5). Compute the concentration of the labeled compounds by the internal standard method. These concentrations are computed based on the calibration data determined in Section 7.

12.5.1 For each pollutant and labeled compound being tested, compare the concentration with the calibration verification limit

in Table 8. If all compounds meet the acceptance criteria, calibration has been verified and analysis of blanks, samples, and precision and recovery standards may proceed. If, however, any compound fails, the measurement system is not performing properly for that compound. In this event, prepare a fresh calibration standard or correct the problem causing the failure and repeat the test (Section 12.1), or recalibrate (Section 7).

12.6 Multiple peaks—each compound injected shall give a single, distinct GC peak.

12.7 On-going precision and accuracy.

12.7.1 Analyze the extract of one of the pair of precision and recovery standards (Section 10.1.3) prior to analysis of samples from the same lot.

12.7.2 Compute the concentration of each pollutant (Tables 1 and 2) by isotope dilution (Section 7.4) for those compounds which have labeled analogs. Compute the concentration of each pollutant which has no labeled analog by the internal standard method (Section 7.5). Compute the concentration of the labeled compounds by the internal standard method.

12.7.3 For each pollutant and labeled compound, compare the concentration with the limits for on-going accuracy in Table 8. If all compounds meet the acceptance criteria, system performance is acceptable and analysis of blanks and samples may proceed. If, however, any individual concentration falls outside of the range given, system performance is unacceptable for that compound.

NOTE: The large number of compounds in Table 8 present a substantial probability that one or more will fail when all compounds are analyzed. To determine if the extraction/concentration system is out of control or if the failure is caused by probability, proceed as follows:

12.7.3.1 Analyze the second aliquot of the pair of precision and recovery standard (Section 10.1.3).

12.7.3.2 Compute the concentration of only those pollutants or labeled compounds that failed the previous test (Section 12.7.3). If these compounds now pass, the extraction/concentration processes are in control and analysis of blanks and samples may proceed. If, however, any of the same compounds fail again, the extraction/concentration processes are not being performed properly for these compounds. In this event, correct the problem, re-extract the sample lot (Section 10) and repeat the on-going precision and recovery test (Section 12.7).

12.7.4 Add results which pass the specifications in Section 12.7.2 to initial and previous on-going data. Update QC charts to perform a graphic representation of continued laboratory performance (Figure 5). Develop a statement of laboratory accuracy for each pollutant and labeled compound by calculating the average percent recovery (R) and the standard deviation of percent recovery (s_r). Express the accuracy as a recovery interval from $R-2s_r$ to $R + 2s_r$. For example, if R = 95% and s_r = 5%, the accuracy is 85−105%.

13. Qualitative Determination

13.1 Qualititative determination is accomplished by comparison of data from analysis of a sample or blank with data from analysis of the shift standard (Section 12.1) and with data stored in the spectral libraries (Section 7.2.4). Identification is confirmed when spectra and retention times agree per the criteria below.

13.2 Labeled compounds and pollutants having no labeled analog:

13.2.1 The signals for all characteristic masses stored in the spectral library (Section 7.2.4) shall be present and shall maximize within the same two consecutive scans.

13.2.2 Either (1) the background corrected EICP areas, or (2) the corrected relative intensities of the mass spectral peaks at the GC peak maximum shall agree within a factor of two (0.5 to 2 times) for all masses stored in the library.

13.2.3 The retention time relative to the nearest eluted internal standard shall be within ±15 scans or ±15 seconds, whichever is greater of this difference in the shift standard (Section 12.1).

13.3 Pollutants having a labled analog:

13.3.1 The signals for all characteristic masses stored in the spectral library (Section 7.2.4) shall be present and shall maximize within the same two consecutive scans.

13.3.2. Either (1) the background corrected EICP areas, or (2) the corrected relative intensities of the mass spectral peaks at the GC peak maximum shall agree within a factor of two for all masses stored in the spectral library.

13.3.3. The retention time difference between the pollutant and its labeled analog shall agree within ±6 scans or ±6 seconds (whichever is greater) of this difference in the shift standard (Section 12.1).

13.4 Masses present in the experimental mass spectrum that are not present in the reference mass spectrum shall be accounted for by contaminant or background ions. If the experimental mass spectrum is contaminated, an experienced spectrometrist (Section 1.4) is to determine the presence or absence of the cmmpound.

14. Quantitative Determination

14.1 Isotope dilution—by adding a known amount of a labeled compound to every sample prior to extraction, correction for recovery of the pollutant can be made because the pollutant and its labeled analog exhibit the same effects upon extraction, concentration, and gas chromatography. Relative response (RR) values for mixtures are used in conjunction with calibration curves described in

Section 7.4 to determine concentrations directly, so long as labeled compound spiking levels are constant. For the phenml example given in Figure 1 (Section 7.4.1), RR would be equal to 1.114. For this RR value, the phenol calibration curve given in Figure 1 indicates a concentration of 27 µg/mL in the sample extract (C_{ex}).

14.2 Internal standard—compute the concentration in the extract using the response factor determined from calibration data (Section 7.5) and the following equation: C_{ex}(µg/mL) = ($A_s \times C_{is}$/($A_{is} \times RF$) where C_{ex} is the concentration of the compound in the extract, and the other terms are as defined in Section 7.5.1.

14.3 The concentration of the pollutant in water is computed using the volumes of the original water sample (Section 10.1) and the final extract volume (Section 10.5), as follows: Concentration in water (µg/L) = ($C_{ex} \times V_{ex}$)/V_s where V_{ex} is the extract volume in mL, and V_s is the sample volume in liters.

14.4 If the EICP area at the quantitiation mass for any compound exceeds the calibration range of the system, the extract of the dilute aliquot (Section 10.1) is analyzed by isotope dilution; otherwise, the extract is diluted by a factor of 10, 9 µL of internal standard solution (Section 6.10) are added to a 1.0 mL aliquot, and this diluted extract is analyzed by the internal standard method (Section 14.2). Quantify each compound at the highest concentration level within the calibration range.

14.5 Report results for all pollutants and labeled compounds (Tables 1 and 2) found in all standards, blanks, and samples in µg/L, to three significant figures. Results for samples which have been diluted are reported at the least dilute level at which the area at the quantitation mass is within the calibration range (Section 14.4) and the labeled compound recovery is within the normal range for the method (Section 15.4).

15. Analysis of Complex Samples

15.1 Untreated effluents and other samples frequently contain high levels (>1000 µg/L) of the compounds of interest, interfering compounds, and/or polymeric materials. Some samples will not concentrate to one mL (Section 10.5); others will overload the GC column and/or mass spectrometer.

15.2 Analyze the dilute aliquot (Section 10.1) when the sample will not concentrate to 1.0 mL. If a dilute aliquot was not extracted, and the sample holding time (Section 9.3) has not been exceeded, dilute an aliquot of the sample with reagent water and re-extract (Section 10.1); otherwise, dilute the extract (Section 14.4) and analyze by the internal standard method (Section 14.2).

15.3 Recovery of internal standard—the EICP area of the internal standard should be within a factor of two of the area in the shift standard (Section 12.1). If the absolute areas of the labeled compounds are within a factor of two of the respective areas in the shift standard, and the internal standard area is less than one-half of its respective area, then internal standard loss in the extract has occurred. In this case, use one of the labeled compounds (perferably a polynuclear aromatic hydrocarbon) to compute the concentration of a pollutant with no labeled analog.

15.4 Recovery of labeled compounds—in most samples, labeled compound recoveries will be similar to those from reagent water (Section 12.7). If the labeled compound recovery is outside the limits given in Table 8, the dilute extract (Section 10.1) is analyzed as in Section 14.4. If the recoveries of all labeled compounds and the internal staldard are low (per the criteria above), then a loss in instrument sensitivity is the most likely cause. In this case, the 100 µg/mL calibration standard (Section 12.1) shall be analyzed and calibration verified (Section 12.5). If a loss in sensitivity has occurred, the instrument shall be repaired, the performance specifications in Section 12 shall be met, and the extract reanalyzed. If a loss in instrument sensitivity has not occurred, the method does not work on the sample being analyzed and the result may not be reported for regulatory compliance purposes.

16. Method Performance

16.1 Interlaboratory performance for this method is detailed in references 9 and 10.

16.2 A chromatogram of the 100 µg/mL acid/base/neutral calibration standard (Section 6.13) is shown in Figure 6.

REFERENCES

1. ''Performance Tests for the Evaluation of Computerized Gas Chromatography/Mass Spectrometry Equipment and Laboratories'' USEPA, EMSL/Cincinnati, OH 45268, EPA–600/4–80–025 (April 1980).

2. ''Working with Carcinogens,'' DHEW, PHS, CDC, NIOSH, Publication 77–206, (August 1977).

3. ''OSHA Safety and Health Standards, General Industry'' OSHA 2206, 29 CFR part 1910 (January 1976).

4. ''Safety in Academic Chemistry Laboratories, '' ACS Committee on Chemical Safety (1979).

5. ''Reference Compound to Calibrate Ion Abundance Measurement in Gas Chromatography-Mass Spectrometry Systems,'' J.W. Eichelberger, L.E. Harris, and W.L. Budde, Anal. Chem., *47*, 955 (1975).

6. ''Handbook of Analytical Quality Control in Water and Wastewater Laboratories,'' USEPA, EMSL/Cincinnati, OH 45268, EPA–600/4–79–019 (March 1979).

7. ''Standard Practice for Sampling Water,'' ASTM Annual Book of Standards, ASTM, Philadelphia, PA, 76 (1980).

8. ''Methods 330.4 and 330.5 for Total Residual Chlorine,'' USEPA, EMSL/ Cincinnati, OH 45268, EPA 600/4–70–020 (March 1979).

9. Colby, B.N., Beimer, R.G., Rushneck, D.R., and Telliard, W.A., ''Isotope Dilution Gas Chromatography-Mass Spectrometry for the determination of Priority Pollutants in Industrial Effluents.'' USEPA, Effluent Guidelines Division, Washington, DC 20460 (1980).

10. ''Inter-laboratory Validation of US Environmental Protection Agency Method 1625,'' USEPA, Effluent Guidelines Division, Washington, DC 20460 (June 15, 1984).

TABLE 1—BASE/NEUTRAL EXTRACTABLE COMPOUNDS

Compound	STORET	CAS registry	EPA-EGD	NPDES
Acenaphthene	34205	83–32–9	001 B	001 B
Acenaphthylene	34200	208–96–8	077 B	002 B
Anthracene	34220	120–12–7	078 B	003 B
Benzidine	39120	92–87–5	005 B	004 B
Benzo(a)anthracene	34526	56–55–3	072 B	005 B
Benzo(b)fluoranthene	34230	205–99–2	074 B	007 B
Benzo(k)fluoranthene	34242	207–08–9	075 B	009 B
Benzo(a)pyrene	34247	50–32–8	073 B	006 B
Benzo(ghi)perylene	34521	191–24–2	079 B	008 B
Biphenyl (Appendix C)	81513	92–52–4	512 B	
Bis(2-chloroethyl) ether	34273	111–44–4	018 B	011 B
Bis(2-chloroethyoxy)methane	34278	111–91–1	043 B	010 B
Bis(2-chloroisopropyl) ether	34283	108–60–1	042 B	012 B
Bis(2-ethylhexyl) phthalate	39100	117–81–7	066 B	013 B
4-bromophenyl phenyl ether	34636	101–55–3	041 B	014 B
Butyl benzyl phthalate	34292	85–68–7	067 B	015 B
n-C10 (Appendix C)	77427	124–18–5	517 B	
n-C12 (Appendix C)	77588	112–40–2	506 B	
n-C14 (Appendix C)	77691	629–59–4	518 B	
n-C16 (Appendix C)	77757	544–76–3	519 B	
n-C18 (Appendix C)	77804	593–45–3	520 B	
n-C20 (Appendix C)	77830	112–95–8	521 B	
n-C22 (Appendix C)	77859	629–97–0	522 B	
n-C24 (Appendix C)	77886	646–31–1	523 B	
n-C26 (Appendix C)	77901	630–01–3	524 B	
n-C28 (Appendix C)	78116	630–02–4	525 B	
n-C30 (Appendix C)	78117	638–68–6	526 B	
Carbazole (4c)	77571	86–74–8	528 B	
2-chloronaphthalene	34581	91–58–7	020 B	016 B
4-chlorophenyl phenyl ether	34641	7005–72–3	040 B	017 B
Chrysene	34320	218–01–9	076 B	018 B
P-cymene (Appendix C)	77356	99–87–6	513 B	
Dibenzo(a,h)anthracene	34556	53–70–3	082 B	019 B
Dibenzofuran (Appendix C and 4c)	81302	132–64–9	505 B	
Dibenzothiophene (Synfuel)	77639	132–65–0	504 B	
Di-n-butyl phthalate	39110	84–74–2	068 B	026 B
1,2-dichlorobenzene	34536	95–50–1	025 B	020 B
1,3-dichlorobenzene	34566	541–73–1	026 B	021 B
1,4-dichlorobenzene	34571	106–46–7	027 B	022 B
3,3′-dichlorobenzidine	34631	91–94–1	028 B	023 B
Diethyl phthalate	34336	84–66–2	070 B	024 B
2,4-dimethylphenol	34606	105–67–9	034 A	003 A
Dimethyl phthalate	34341	131–11–3	071 B	025 B
2,4-dinitrotoluene	34611	121–14–2	035 B	027 B
2,6-dinitrotoluene	34626	606–20–2	036 B	028 B
Di-n-octyl phthalate	34596	117–84–0	069 B	029 B
Diphenylamine (Appendix C)	77579	122–39–4	507 B	
Diphenyl ether (Appendix C)	77587	101–84–8	508 B	
1,2-diphenylhydrazine	34346	122–66–7	037 B	030 B
Fluoranthene	34376	206–44–0	039 B	031 B
Fluorene	34381	86–73–7	080 B	032 B
Hexachlorobenzene	39700	118–74–1	009 B	033 B
Hexachlorobutadiene	34391	87–68–3	052 B	034 B
Hexachloroethane	34396	67–72–1	012 B	036 B
Hexachlorocyclopentadiene	34386	77–47–4	053 B	035 B
Indeno(1,2,3-cd)pyrene	34403	193–39–5	083 B	037 B
Isophorone	34408	78–59–1	054 B	038 B
Naphthalene	34696	91–20–3	055 B	039 B
B-naphthylamine (Appendix C)	82553	91–59–8	502 B	
Nitrobenzene	34447	98–95–3	056 B	040 B
N-nitrosodimethylamine	34438	62–75–9	061 B	041 B
N-nitrosodi-n-propylamine	34428	621–64–7	063 B	042 B
N-nitrosodiphenylamine	34433	86–30–3	062 B	043 B

TABLE 1—BASE/NEUTRAL EXTRACTABLE COMPOUNDS—Continued

Compound	STORET	CAS registry	EPA-EGD	NPDES
Phenanthrene	34461	85–01–8	081 B	044 B
Phenol	34694	108–95–2	065 A	010 A
a-Picoline (Synfuel)	77088	109–06–89	503 B	
Pyrene	34469	129–00–0	084 B	045 B
styrene (Appendix C)	77128	100–42–5	510 B	
a-terpineol (Appendix C)	77493	98–55–5	509 B	
1,2,3-trichlorobenzene (4c)	77613	87–61–6	529 B	
1,2,4-trichlorobenzene	34551	120–82–1	008 B	046 B

TABLE 2—ACID EXTRACTABLE COMPOUNDS

Compound	STORET	CAS registry	EPA-EGD	NPDES
4-chloro-3-methylphenol	34452	59–50–7	022 A	008 A
2-chlorophenol	34586	95–57–8	024 A	001 A
2,4-dichlorophenol	34601	120–83–2	031 A	002 A
2,4-dinitrophenol	34616	51–28–5	059 A	005 A
2-methyl-4,6-dinitrophenol	34657	534–52–1	060 A	004 A
2-nitrophenol	34591	88–75–5	057 A	006 A
4-nitrophenol	34646	100–02–7	058 A	007 A
Pentachlorophenol	39032	87–86–5	064 A	009 A
2,3,6-trichlorophenol (4c)	77688	93–37–55	530 A	
2,4,5-trichlorophenol (4c)	.....	95–95–4	531 A	
2,4,6-trichlorophenol	34621	88–06–2	021 A	011 A

TABLE 3—GAS CHROMATOGRAPHY OF BASE/NEUTRAL EXTRACTABLE COMPOUNDS

EGD No.[1]	Compound	Retention time			Detection limit[2] (µg/L)
		Mean (sec)	EGD Ref	Relative	
164	2,2′-difluorobiphenyl (int std)	1163	164	1.000–1.000	10
061	N-nitrosodimethylamine	385	164	ns	50
603	alpha picoline-d7	417	164	0.326–0.393	50
703	alpha picoline	426	603	1.006–1.028	50
610	styrene-d5	546	164	0.450–0.488	10
710	styrene	549	610	1.002–1.009	10
613	p-cymene-d14	742	164	0.624–0.652	10
713	p-cymene	755	613	1.008–1.023	10
265	phenol-d5	696	164	0.584–0.613	10
365	phenol	700	265	0.995–1.010	10
218	bis(2-chloroethyl) ether-d8	696	164	0.584–0.607	10
318	bis(2-chloroethyl) ether	704	218	1.007–1.016	10
617	n-decane-d22	698	164	0.585–0.615	10
717	n-decane	720	617	1.022–1.038	10
226	1,3-dichlorobenzene-d4	722	164	0.605–0.636	10
326	1,3-dichlorobenzene	724	226	0.998–1.008	10
227	1,4-dichlorobenzene-d4	737	164	0.601–0.666	10
327	1,4-dichlorobenzene	740	227	0.997–1.009	10
225	1,2-dichlorobenzene-d4	758	164	0.632–0.667	10
325	1,2-dichlorobenzene	760	225	0.995–1.008	10
242	bis(2-chloroisopropyl) ether-d12	788	164	0.664–0.691	10
342	bis(2-chloroisopropyl) ether	799	242	1.010–1.016	10
212	hexachloroethane-13C	819	164	0.690–0.717	10
312	hexachloroethane	823	212	0.999–1.001	10
063	N-nitrosodi-n-propylamine	830	164	ns	20
256	nitrobenzene-d5	845	164	0.706–0.727	10
356	nitrobenzene	849	256	1.002–1.007	10
254	isophorone-d8	881	164	0.747–0.767	10
354	isophorone	889	254	0.999–1.017	10
234	2,4-dimethyl phenol-d3	921	164	0.781–0.803	10
334	2,4-dimethylphenol	924	234	0.999–1.003	10
043	bis(2-chloroethoxy) methane	939	164	ns	10
208	1,2,4-trichlorobenzene-d3	955	164	0.813–0.830	10
308	1,2,4-trichlorobenzene	958	208	1.000–1.005	10
255	naphthalene-d8	963	164	0.819–0.836	10
355	naphthalene	967	255	1.001–1.006	10
609	alpha-terpineol-d3	973	164	0.829–0.844	10

TABLE 3—GAS CHROMATOGRAPHY OF BASE/NEUTRAL EXTRACTABLE COMPOUNDS—Continued

EGD No.[1]	Compound	Retention time			Detection limit[2] (µg/L)
		Mean (sec)	EGD Ref	Relative	
709	alpha-terpineol	975	609	0.998–1.008	10
606	n-dodecane-d26	953	164	0.730–0.908	10
706	n-dodecane	981	606	0.986–1.051	10
529	1,2,3-trichlorobenzene	1003	164	ns	10
252	hexachlorobutadiene-13C4	1005	164	0.856–0.871	10
352	hexachlorobutadiene	1006	252	0.999–1.002	10
253	hexachlorocyclopentadiene-13C4	1147	164	0.976–0.986	10
353	hexachlorocyclopentadiene	1142	253	0.999–1.001	10
220	2-chloronaphthalene-d7	1185	164	1.014–1.024	10
320	2-chloronaphthalene	1200	220	0.997–1.007	10
518	n-tetradecane	1203	164	ns	10
612	Biphenyl-d10	1205	164	1.016–1.027	10
712	Biphenyl	1195	612	1.001–1.006	10
608	Diphenyl ether-d10	1211	164	1.036–1.047	10
708	Diphenyl ether	1216	608	0.997–1.009	10
277	Acenaphthylene-d8	1265	164	1.080–1.095	10
377	Acenaphthylene	1247	277	1.000–1.004	10
271	Dimethyl phthalate-d4	1269	164	1.083–1.102	10
371	Dimethyl phthalate	1273	271	0.998–1.005	10
236	2,6-dinitrotoluene-d3	1283	164	1.090–1.112	10
336	2,6-dinitrotoluene	1300	236	1.001–1.005	10
201	Acenaphthene-d10	1298	164	1.107–1.125	10
301	Acenaphthene	1304	201	0.999–1.009	10
605	Dibenzofuran-d8	1331	164	1.134–1.155	10
705	Dibenzofuran	1335	605	0.998–1.007	10
602	Beta-naphthylamine-d7	1368	164	1.163–1.189	50
702	Beta-naphthylamine	1371	602	0.996–1.007	50
280	Fluorene-d10	1395	164	1.185–1.214	10
380	Fluorene	1401	281	0.999–1.008	10
240	4-chlorophenyl phenyl ether-d5	1406	164	1.194–1.223	10
340	4-chlorophenyl phenyl ether	1409	240	0.990–1.015	10
270	Diethyl phthalate-d4	1409	164	1.197–1.229	10
370	Diethyl phthalate	1414	270	0.996–1.006	10
619	n-hexadecane-d34	1447	164	1.010–1.478	10
719	n-hexadecane	1469	619	1.013–1.020	10
235	2,4-dinitrotoluene-d3	1359	164	1.152–1.181	10
335	2,4-dinitrotoluene	1344	235	1.000–1.002	10
237	1,2-diphenylhydrazine-d8	1433	164	1.216–1.248	20
337	1,2-diphenylhydrazine ([3])	1439	237	0.999–1.009	20
607	Diphenylamine-d10	1437	164	1.213–1.249	20
707	Diphenylamine	1439	607	1.000–1.007	20
262	N-nitrosodiphenylamine-d6	1447	164	1.225–1.252	20
362	N-nitrosodiphenylamine ([4])	1464	262	1.000–1.002	20
041	4-bromophenyl phenyl ether	1498	164	1.271–1.307	10
209	Hexachlorobenzene-13C6	1521	164	1.288–1.327	10
309	Hexachlorobenzene	1522	209	0.999–1.001	10
281	Phenanthrene-d10	1578	164	1.334–1.380	10
520	n-octadecane	1580	164	ns	10
381	Phenanthrene	1583	281	1.000–1.005	10
278	Anthracene-d10	1588	164	1.342–1.388	10
378	Anthracene	1592	278	0.998–1.006	10
604	Dibenzothiophene-d8	1559	164	1.314–1.361	10
704	Dibenzothiophene	1564	604	1.000–1.006	10
528	Carbazole	1650	164	ns	20
621	n-eicosane-d42	1655	164	1.184–1.662	10
721	n-eicosane	1677	621	1.010–1.021	10
268	Di-n-butyl phthalate-d4	1719	164	1.446–1.510	10
368	Di-n-butyl phthalate	1723	268	1.000–1.003	10
239	Fluoranthene-d10	1813	164	1.522–1.596	10
339	Fluoranthene	1817	239	1.000–1.004	10
284	Pyrene-d10	1844	164	1.523–1.644	10
384	Pyrene	1852	284	1.001–1.003	10
205	Benzidine-d8	1854	164	1.549–1.632	50
305	Benzidine	1853	205	1.000–1.002	50
522	n-docosane	1889	164	ns	10
623	n-tetracosane-d50	1997	164	1.671–1.764	10
723	n-tetracosane	2025	612	1.012–1.015	10
067	Butylbenzyl phthalate	2060	164	ns	10
276	Chrysene-d12	2081	164	1.743–1.837	10
376	Chrysene	2083	276	1.000–1.004	10

TABLE 3—GAS CHROMATOGRAPHY OF BASE/NEUTRAL EXTRACTABLE COMPOUNDS—Continued

EGD No.[1]	Compound	Retention time			Detection limit[2] (µg/L)
		Mean (sec)	EGD Ref	Relative	
272	Benzo(a)anthracene-d12	2082	164	1.735–1.846	10
372	Benzo(a)anthracene	2090	272	0.999–1.007	10
228	3,3′-dichlorobenzidine-d6	2088	164	1.744–1.848	50
328	3,3′-dichlorobenzidine	2086	228	1.000–1.001	50
266	Bis(2-ethylhexyl) phthalate-d4	2123	164	1.771–1.880	10
366	Bis(2-ethylhexyl) phthalate	2124	266	1.000–1.002	10
524	n-hexacosane	2147	164	ns	10
269	di-n-octyl phthalate-d4	2239	164	1.867–1.982	10
369	di-n-octyl phthalate	2240	269	1.000–1.002	10
525	n-octacosane	2272	164	ns	10
274	Benzo(b)fluoranthene-d12	2281	164	1.902–2.025	10
354	Benzo(b)fluoranthene	2293	274	1.000–1.005	10
275	Benzo(k)fluoranthene-d12	2287	164	1.906–2.033	10
375	Benzo(k)fluoranthene	2293	275	1.000–1.005	10
273	Benzo(a)pyrene-d12	2351	164	1.954–2.088	10
373	Benzo(a)pyrene	2350	273	1.000–1.004	10
626	N-triacontane-d62	2384	164	1.972–2.127	10
726	N-triacontane	2429	626	1.011–1.028	10
083	Indeno(1,2,3-cd)pyrene	2650	164	ns	20
082	Dibenzo(a,h)anthracene	2660	164	ns	20
279	Benzo(ghi)perylene-d12	2741	164	2.187–2.524	20
379	Benzo(ghi)perylene	2750	279	1.001–1.006	20

[1] Reference numbers beginning with 0, 1 or 5 indicate a pollutant quantified by the internal standard method; reference numbers beginning with 2 or 6 indicate a labeled compound quantified by the internal standard method; reference numbers beginning with 3 or 7 indicate a pollutant quantified by isotope dilution.

[2] This is a minimum level at which the entire GC/MS system must give recognizable mass spectra (background corrected) and acceptable calibration points.

[3] Detected as azobenzene.

[4] Detected as diphenylamine.

ns = specification not available at time of release of method.

Column: 30 ±2 m × 0.25 ±0.02 mm i.d. 94% methyl, 4% phenyl, 1% vinyl bonded phase fused silica capillary.

Temperature program: 5 min at 30 °C; 30 – 280 °C at 8 °C per min; isothermal at 280 °C until benzo(ghi)perylene elutes.

Gas velocity: 30 ±5 cm/sec.

TABLE 4—GAS CHROMATOGRAPHY OF ACID EXTRACTABLE COMPOUNDS

EGD No.[1]	Compound	Retention time			Detection limit[2] (µg/L)
		Mean (sec)	EGD Ref	Relative	
164	2,2′-difluorobiphenyl (int std)	1163	164	1.000–1.000	10
224	2-chlorophenol-d4	701	164	0.587–0.618	10
324	2-chlorophenol	705	224	0.997–1.010	10
257	2-nitrophenol-d4	898	164	0.761–0.783	20
357	2-nitrophenol	900	257	0.994–1.009	20
231	2,4-dichlorophenol-d3	944	164	0.802–0.822	10
331	2,4-dichlorophenol	947	231	0.997–1.006	10
222	4-chloro-3-methylphenol-d2	1086	164	0.930–0.943	10
322	4-chloro-3-methylphenol	1091	222	0.998–1.003	10
221	2,4,6-trichlorophenol-d2	1162	164	0.994–1.005	10
321	2,4,6-trichlorophenol	1165	221	0.998–1.004	10
531	2,4,5-trichlorophenol	1170	164	ns	10
530	2,3,6-trichlorophenol	1195	164	ns	10
259	2,4-dinitrophenol-d3	1323	164	1.127–1.149	50
359	2,4-dinitrophenol	1325	259	1.000–1.005	50
258	4-nitrophenol-d4	1349	164	1.147–1.175	50
358	4-nitrophenol	1354	258	0.997–1.006	50
260	2-methyl-4,6-dinitrophenol-d2	1433	164	1.216–1.249	20
360	2-methyl-4,6-dinitrophenol	1435	260	1.000–1.002	20
264	Pentachlorophenol-13C6	1559	164	1.320–1.363	50
364	Pentachlorophenol	1561	264	0.998–1.002	50

[1] Reference numbers beginning with 0, 1 or 5 indicate a pollutant quantified by the internal standard method; reference numbers beginning with 2 or 6 indicate a labeled compound quantified by the internal standard method; reference numbers beginning with 3 or 7 indicate a pollutant quantified by isotope dilution.

[2] This is a minimum level at which the entire GC/MS system must give recognizable mass spectra (background corrected) and acceptable calibration points.

ns = specification not available at time of release of method.

Column: 30 ±2m × 0.25 ±0.02mm i.d. 94% methyl, 4% phenyl, 1% vinyl bonded phase fused silica capillary.

Temperature program: 5 min at 30 °C; 8 °C/min. to 250 °C or until pentachlorophenol elutes.

Gas velocity: 30 ±5 cm/sec.

TABLE 5—DFTPP MASS INTENSITY SPECIFICATIONS

Mass	Intensity required
51	30–60 percent of mass 198.
68	Less than 2 percent of mass 69.
70	Less than 2 percent of mass 69.
127	40–60 percent of mass 198.
197	Less than 1 percent of mass 198.
199	5–9 percent of mass 198.
275	10–30 percent of mass 198.
365	greater than 1 percent of mass 198
441	present and less than mass 443
442	40–100 percent of mass 198.
443	17–23 percent of mass 442.

TABLE 6—BASE/NEUTRAL EXTRACTABLE COMPOUND CHARACTERISTIC MASSES

Compound	Labeled analog	Primary m/z
Acenaphthene	d10	154/164
Acenaphthylene	d8	152/160
Anthracene	d10	178/188
Benzidine	d8	184/192
Benzo(a)anthracene	d12	228/240
Benzo(b)fluoranthene	d12	252/264
Benzo(k)fluoranthene	d12	252/264
Benzo(a)pyrene	d12	252/264
Benzo(ghi)perylene	d12	276/288
Biphenyl	d10	154/164
Bis(2-chloroethyl) ether	d8	93/101
Bis(2-chloroethoxy)methane	.....	93
Bis(2-chloroisopropyl) ether	d12	121/131
Bis(2-ethylhexyl) phthalate	d4	149/153
4-bromophenyl phenyl ether	.....	248
Butyl benzyl phthalate	.....	149
n-C10	d22	55/66
n-C12	d26	55/66
n-C14	.....	55
n-C16	d34	55/66
n-C18	.....	55
n-C20	d42	55/66
n-C22	.....	55
n-C24	d50	55/66
n-C26	.....	55
n-C28	.....	55
n-C30	d62	55/66
Carbazole	d8	167/175
2-chloronaphthalene	d7	162/169
4-chlorophenyl phenyl ether	d5	204/209
Chrysene	d12	228/240
p-cymene	d14	114/130
Dibenzo(a,h)anthracene	.....	278
Dibenzofuran	d8	168/176
Dibenzothiophene	d8	184/192
Di-n-butyl phthalate	d4	149/153
1,2-dichlorobenzene	d4	146/152
1,3-dichlorobenzene	d4	146/152

TABLE 6—BASE/NEUTRAL EXTRACTABLE COMPOUND CHARACTERISTIC MASSES—Continued

Compound	Labeled analog	Primary m/z
1,4-dichlorobenzene	d4	146/152
3,3′-dichlorobenzidine	d6	252/258
Diethyl phthalate	d4	149/153
2,4-dimethylphenol	d3	122/125
Dimethyl phthalate	d4	163/167
2,4-dinitrotoluene	d3	164/168
2,6-dinitrotoluene	d3	165/167
Di-n-octyl phthalate	d4	149/153
Diphenylamine	d10	169/179
Diphenyl ether	d10	170/180
1,2-diphenylhydrazine [1]	d10	77/82
Fluoranthene	d10	202/212
Fluorene	d10	166/176
Hexachlorobenzene	13C6	284/292
Hexachlorobutadiene	13C4	225/231
Hexachloroethane	13C	201/204
Hexachlorocyclopentadiene	13C4	237/241
Ideno(1,2,3-cd)pyrene	.....	276
Isophorone	d8	82/88
Naphthalene	d8	128/136
B-naphthylamine	d7	143/150
Nitrobenzene	d5	123/128
N-nitrosodimethylamine	.....	74
N-nitrosodi-n-propylamine	.....	70
N-nitrosodiphenylamile [2]	d6	169/175
Phenanthrene	d10	178/188
Phenol	d5	94/71
a-picoline	d7	93/100
Pyrene	d10	202/212
Styrene	d5	104/109
a-terpineol	d3	59/62
1,2,3-trichlorobenzene	d3	180/183
1,2,4-trichlorobenzene	d3	180/183

[1] Detected as azobenzene.
[2] Detected as diphenylamine.

TABLE 7—ACID EXTRACTABLE COMPOUND CHARACTERISTIC MASSES

Compound	Labeled analog	Primary m/z
4-chloro-3-methylphenol	d2	107/109
2-chlorophenol	d4	128/132
2,4-dichlorophenol	d3	162/167
2,4-dinitrophenol	d3	184/187
2-methyl-4,6-dinitrophenol	d2	198/200
2-nitrophenol	d4	139/143
4-nitrophenol	d4	139/143
Pentachlorophenol	13C6	266/272
2,3,6-trichlorophenol	d2	196/200
2,4,5-trichlorophenol	d2	196/200
2,4,6-trichlorophenol	d2	196/200

TABLE 8—ACCEPTANCE CRITERIA FOR PERFORMANCE TESTS

EGD No. [1]	Compound	Acceptance criteria				
		Initial precision and accuracy section 8.2.3 (µg/L)		Labeled compound recovery sec. 8.3 and 14.2 P (percent)	Calibration verification sec. 12.5 (µg/mL)	On-going accuracy sec. 11.6 R (µg/L)
		s	X			
301	Acenaphthene	21	79–134	.....	80–125	72–144
201	Acenaphthene-d10	38	38–147	20–270	71–141	30–180
377	Acenaphtylene	38	69–186	.....	60–166	61–207
277	Acenaphthylene-d8	31	38–146	23–239	66–152	33–168

TABLE 8—ACCEPTANCE CRITERIA FOR PERFORMANCE TESTS—Continued

EGD No.[1]	Compound	Acceptance criteria				
		Initial precision and accuracy section 8.2.3 (µg/L)		Labeled compound recovery sec. 8.3 and 14.2 P (percent)	Calibration verification sec. 12.5 (µg/mL)	On-going accuracy sec. 11.6 R (µg/L)
		s	X			
378	Anthracene	41	58–174	.....	60–168	50–199
278	Anthracene-d10	49	31–194	14–419	58–171	23–242
305	Benzidine	119	16–518	.....	34–296	11–672
205	Benzidine-d8	269	ns-ns	ns-ns	ns-ns	ns-ns
372	Benzo(a)anthracene	20	65–168	.....	70–142	62–176
272	Benzo(a)anthracene-d12	41	25–298	12–605	28–357	22–329
374	Benzo(b)fluoranthene	183	32–545	.....	61–164	20–ns
274	Benzo(b)fluoranthene-d12	168	11–577	ns-ns	14–ns	ns-ns
375	Benzo(k)fluoranthene	26	59–143	.....	13–ns	53–155
275	Benzo(k)fluoranthene-d12	114	15–514	ns-ns	13–ns	ns–685
373	Benzo(a)pyrene	26	62–195	.....	78–129	59–206
273	Benzo(a)pyrene-d12	24	35–181	21–290	12–ns	32–194
379	Benzo(ghi)perylene	21	72–160	.....	69–145	58–168
279	Benzo(ghi)perylene-d12	45	29–268	14–529	13–ns	25–303
712	Biphenyl (Appendix C)	41	75–148	.....	58–171	62–176
612	Biphenyl-d12	43	28–165	ns-ns	52–192	17–267
318	Bis(2-chloroethyl) ether	34	55–196	.....	61–164	50–213
218	Bis(2-chloroethyl) ether-d8	33	29–196	15–372	52–194	25–222
043	Bis(2-chloroethoxy)methane*	27	43–153	.....	44–228	39–166
342	Bis(2-chloroisopropyl) ether	17	81–138	.....	67–148	77–145
242	Bis(2-chloroisopropyl)ether-d12	27	35–149	20–260	44–229	30–169
366	Bis(2-ethylhexyl) phthalate	31	69–220	.....	76–131	64–232
266	Bis(2-ethylhexyl) phthalate-d4	29	32–205	18–364	43–232	28–224
041	4-bromophenyl phenyl ether*	44	44–140	.....	52–193	35–172
067	Butyl benzyl phthalate*	31	19–233	.....	22–450	35–170
717	n-C10 (Appendix C)	51	24–195	.....	42–235	19–237
617	n-C10-d22	70	ns–298	ns-ns	44–227	ns–504
706	n-C12 (Appendix C)	74	35–369	.....	60–166	29–424
606	n-C12-d26	53	ns–331	ns-ns	41–242	ns–408
518	n-C14 (Appendix C)*	109	ns–985	.....	37–268	ns-ns
719	n-C16 (Appendix C)	33	80–162	.....	72–138	71–181
619	n-C16-d34	46	37–162	18–308	54–186	28–202
520	n-C18 (Appendix C)*	39	42–131	.....	40–249	35–167
721	n-C20 (Appendix C)	59	53–263	.....	54–184	46–301
621	n-C20-d42	34	34–172	19–306	62–162	29–198
522	n-C22 (Appendix C)*	31	45–152	.....	40–249	39–195
723	n-C24 (Appendix C)	11	80–139	.....	65–154	78–142
623	n-C24-d50	28	27–211	15–376	50–199	25–229
524	n-C26 (Appendix C)*	35	35–193	.....	26–392	31–212
525	n-C28 (Appendix C)*	35	35–193	.....	26–392	31–212
726	n-C30 (Appendix C)	32	61–200	.....	66–152	56–215
626	n-C30-d62	41	27–242	13–479	24–423	23–274
528	Carbazole (4c)*	38	36–165	.....	44–227	31–188
320	2-chloronaphthalene	100	46–357	.....	58–171	35–442
220	2-chloronaphthalene-d7	41	30–168	15–324	72–139	24–204
322	4-chloro-3-methylphenol	37	76–131	.....	85–115	62–159
222	4-chloro-3-methylphenol-d2	111	30–174	ns–613	68–147	14–314
324	2-chlorophenol	13	79–135	.....	78–129	76–138
224	2-chlorophenol-d4	24	36–162	23–255	55–180	33–176
340	4-chlorophenyl phenyl ether	42	75–166	.....	71–142	63–194
240	4-chlorophenyl phenyl ether-d5	52	40–161	19–325	57–175	29–212
376	Chrysene	51	59–186	.....	70–142	48–221
276	Chrysene-d12	69	33–219	13–512	24–411	23–290
713	p-cymene (Appendix C)	18	76–140	.....	79–127	72–147
613	p-cymene-d14	67	ns–359	ns-ns	66–152	ns–468
082	Dibenzo(a,h)anthracene*	55	23–299	.....	13–761	19–340
705	Dibenzofuran (Appendix C)	20	85–136	.....	73–136	79–146
605	Dibenzofuran-d8	31	47–136	28–220	66–150	39–160
704	Dibenzothiophene (Synfuel)	31	79–150	.....	72–140	70–168
604	Dibenzothiophene-d8	31	48–130	29–215	69–145	40–156
368	Di-n-butyl phthalate	15	76–165	.....	71–142	74–169
268	Di-n-butyl phthalate-d4	23	23–195	13–346	52–192	22–209
325	1,2-dichlorobenzene	17	73–146	.....	74–135	70–152
225	1,2-dichlorobenzene-d4	35	14–212	ns–494	61–164	11–247
326	1,3-dichlorobenzene	43	63–201	.....	65–154	55–225
226	1,3-dichlorobenzene-d4	48	13–203	ns–550	52–192	ns–260
327	1,4-dichlorobenzene	42	61–194	.....	62–161	53–219

TABLE 8—ACCEPTANCE CRITERIA FOR PERFORMANCE TESTS—Continued

EGD No.[1]	Compound	Acceptance criteria				
		Initial precision and accuracy section 8.2.3 (µg/L)		Labeled compound recovery sec. 8.3 and 14.2 P (percent)	Calibration verification sec. 12.5 (µg/mL)	On-going accuracy sec. 11.6 R (µg/L)
		s	X			
227	1,4-dichlorobenzene-d4	48	15–193	ns–474	65–153	11–245
328	3,3′-dichlorobenzidine	26	68–174	.....	77–130	64–185
228	3,3′-dichlorobenzidine-d6	80	ns–562	ns-ns	18–558	ns-ns
331	2,4-dichlorophenol	12	85–131	.....	67–149	83–135
231	2,4-dichlorophenol-d3	28	38–164	24–260	64–157	34–182
370	Diethyl phthalate	44	75–196	.....	74–135	65–222
270	Diethyl phthalate-d4	78	ns–260	ns-ns	47–211	ns-ns
334	2,4-dimethylphenol	13	62–153	.....	67–150	60–156
234	2,4-dimethylphenol-d3	22	15–228	ns–449	58–172	14–242
371	Dimethyl phthalate	36	74–188	.....	73–137	67–207
271	Dimethyl phthalate-d4	108	ns–640	ns-ns	50–201	ns-ns
359	2,4-dinitrophenol	18	72–134	.....	75–133	68–141
259	2,4-dinitrophenol-d3	66	22–308	ns-ns	39–256	17–378
335	2,4-dinitrotoluene	18	75–158	.....	79–127	72–164
235	2,4-dinitrotoluene-d3	37	22–245	10–514	53–187	19–275
336	2,6-dinitrotoluene	30	80–141	.....	55–183	70–159
236	2,6-dinitrotoluene-d3	59	44–184	17–442	36–278	31–250
369	Di-n-octyl phthalate	16	77–161	.....	71–140	74–166
269	Di-n-octyl phthalate-d4	46	12–383	ns-ns	21–467	10–433
707	Diphenylamine (Appendix C)	45	58–205	.....	57–176	51–231
607	Diphenylamine-d10	42	27–206	11–488	59–169	21–249
708	Diphenyl ether (Appendix C)	19	82–136	.....	83–120	77–144
608	Diphenyl ether-d10	37	36–155	19–281	77–129	29–186
337	1,2-diphenylhydrazine	73	49–308	.....	75–134	40–360
237	1,2-diphenylhydrazine-d10	35	31–173	17–316	58–174	26–200
339	Fluoranthene	33	71–177	.....	67–149	64–194
239	Fluoranthene-d10	35	36–161	20–278	47–215	30–187
380	Fluorene	29	81–132	.....	74–135	70–151
280	Fluorene-d10	43	51–131	27–238	61–164	38–172
309	Hexachlorobenzene	16	90–124	.....	78–128	85–132
209	Hexachlorobenzene-13C6	81	36–228	13–595	38–265	23–321
352	hexachlorobutadiene	56	51–251	.....	74–135	43–287
252	hexachlorobutadiene-13C4	63	ns–316	ns-ns	68–148	ns–413
312	hexachloroethane	227	21–ns	.....	71–141	13–ns
212	hexachloroethane-13C1	77	ns–400	ns-ns	47–212	ns–563
353	hexachlorocyclopentadiene	15	69–144	.....	77–129	67–148
253	hexachlorocyclopentadiene-13C4	60	ns-ns	ns-ns	47–211	ns-ns
083	ideno(1,2,3-cd)pyrene*	55	23–299	.....	13–761	19–340
354	isophorone	25	76–156	.....	70–142	70–168
254	isophorone-d8	23	49–133	33–193	52–194	44–147
360	2-methyl-4,6-dinitrophenol	19	77–133	.....	69–145	72–142
260	2-methyl-4,6-dinitrophenol-d2	64	36–247	16–527	56–177	28–307
355	naphthalene	20	80–139	.....	73–137	75–149
255	naphthalene-d8	39	28–157	14–305	71–141	22–192
702	B-naphthylamine (Appendix C)	49	10–ns	.....	39–256	ns-ns
602	B-naphthylamine-d7	33	ns-ns	ns-ns	44–230	ns-ns
356	nitrobenzene	25	69–161	.....	85–115	65–169
256	nitrobenzene-d5	28	18–265	ns-ns	46–219	15–314
357	2-nitrophenol	15	78–140	.....	77–129	75–145
257	2-nitrophenol-d4	23	41–145	27–217	61–163	37–158
358	4-nitrophenol	42	62–146	.....	55–183	51–175
258	4-nitrophenol-d4	188	14–398	ns-ns	35–287	ns-ns
061	N-nitrosodimethylamile*	198	21–472	.....	40–249	12–807
063	N-nitrosodi-n-proplyamine*	198	21–472	.....	40–249	12–807
362	N-nitrosodiphenylamine	45	65–142	.....	68–148	53–173
262	N-nitrosodiphenylamine-d6	37	54–126	26–256	59–170	40–166
364	pentachlorophenol	21	76–140	.....	77–130	71–150
264	pentachlorophenol-13C6	49	37–212	18–412	42–237	29–254
381	phenanthrene	13	93–119	.....	75–133	87–126
281	phenanthrene-d10	40	45–130	24–241	67–149	34–168
365	phenol	36	77–127	.....	65–155	62–154
265	phenol-d5	161	21–210	ns-ns	48–208	ns-ns
703	a-picoline (Synfuel)	38	59–149	.....	60–165	50–174
603	a-picoline-d7	138	11–380	ns-ns	31–324	ns–608
384	pyrene	19	76–152	.....	76–132	72–159
284	pyrene-d10	29	32–176	18–303	48–210	28–196
710	styrene (Appendix C)	42	53–221	.....	65–153	48–244

TABLE 8—ACCEPTANCE CRITERIA FOR PERFORMANCE TESTS—Continued

EGD No.[1]	Compound	Acceptance criteria				
		Initial precision and accuracy section 8.2.3 (µg/L)		Labeled compound recovery sec. 8.3 and 14.2 P (percent)	Calibration verification sec. 12.5 (µg/mL)	On-going accuracy sec. 11.6 R (µg/L)
		s	X			
610	styrene-d5	49	ns–281	ns-ns	44–228	ns–348
709	a-terpineol (Appendix C)	44	42–234	.....	54–186	38–258
609	a-terpineol-d3	48	22–292	ns–672	20–502	18–339
529	1,2,3-trichlorobenzene (4c)*	69	15–229	.....	60–167	11–297
308	1,2,4-trichlorobenzene	19	82–136	.....	78–128	77–144
208	1,2,4-trichlorobenzene-d3	57	15–212	ns–592	61–163	10–282
530	2,3,6-trichlorophenol (4c)*	30	58–137	.....	56–180	51–153
531	2,4,5-trichlorophenol (4c)*	30	58–137	.....	56–180	51–153
321	2,4,6-trichlorophenol	57	59–205	.....	81–123	48–244
221	2,4,6-trichlorophenol-d2	47	43–183	21–363	69–144	34–226

[1] Reference numbers beginning with 0, 1 or 5 indicate a pollutant quantified by the internal standard method; reference numbers beginning with 2 or 6 indicate a labeled compound quantified by the internal standard method; reference numbers beginning with 3 or 7 indicate a pollutant quantified by isotope dilution.

* Measured by internal standard; specification derived from related compound.

ns = no specification; limit is outside the range that can be measured reliably.

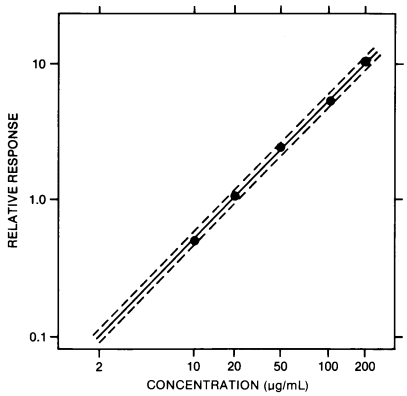

FIGURE 1 Relative Response Calibration Curve for Phenol. The Dotted Lines Enclose a ±10 Percent Error Window.

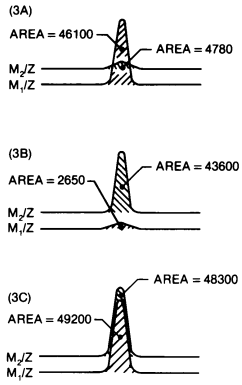

FIGURE 3 Extracted Ion Current Profiles for (3A) Unlabeled Compound, (3B) Labeled Compound, and (3C) Equal Mixture of Unlabeled and Labeled Compounds.

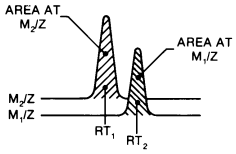

FIGURE 2 Extracted Ion Current Profiles for Chromatographically Resolved Labeled (m_2/z) and Unlabeled (m_1/z) Pairs.

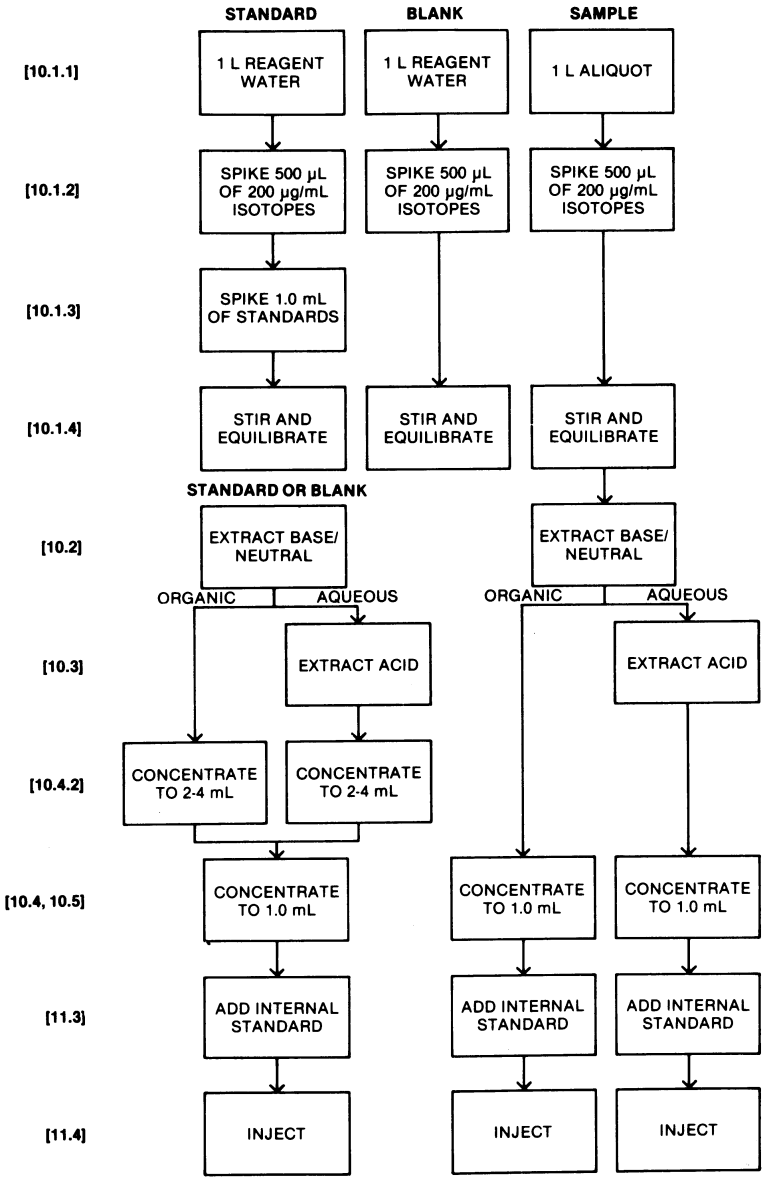

FIGURE 4 Flow Chart for Extraction/Concentration of Precision and Recovery Standard, Blank, and Sample by Method 1625. Numbers in Brackets [ ] Refer to Section Numbers in the Method.

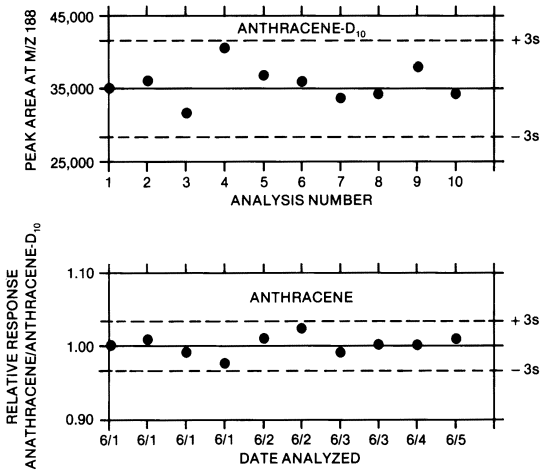

FIGURE 5 Quality Control Charts Showing Area (top graph) and Relative Response of Anthracene to Anthracene-d_{10} (lower graph) Plotted as a Function of Time or Analysis Number.

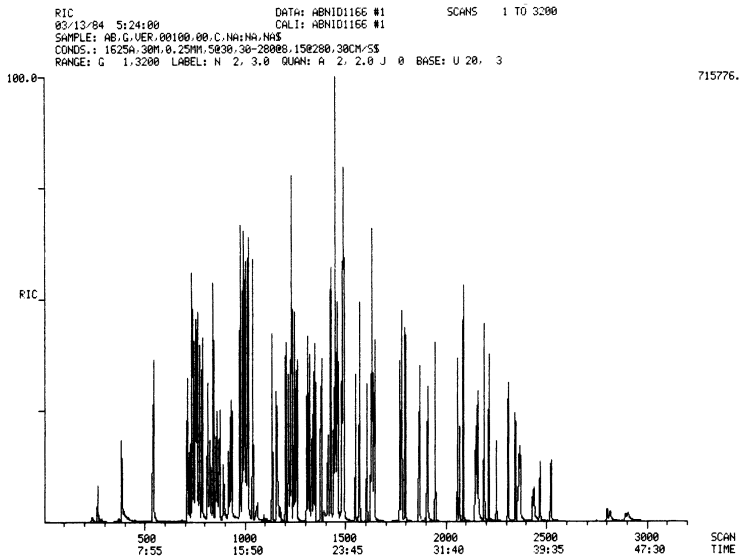

FIGURE 6 Chromatogram of Combined Acid/base/neutral Standard.

ATTACHMENT 1 TO METHOD 1625

INTRODUCTION

To support measurement of several semivolatile pollutants, EPA has developed this attachment to EPA Method 1625B.[1] The modifications listed in this attachment are approved only for monitoring wastestreams from the Centralized Waste Treatment Point Source Category (40 CFR part 437) and the Landfills Point Source Category (40 CFR part 445). EPA Method 1625B (the Method) employs sample extraction with methylene chloride followed by analysis of the extract using capillary column gas chromatography-mass spectrometry (GC/MS). This attachment addresses the addition of the semivolatile pollutants listed in Tables 1 and 2 to all applicable standard, stock, and spiking solutions utilized for the determination of semivolatile organic compounds by EPA Method 1625B.

1.0 EPA METHOD 1625 REVISION B MODIFICATION SUMMARY

The additional semivolatile organic compounds listed in Tables 1 and 2 are added to all applicable calibration, spiking, and other solutions utilized in the determination of semivolatile compounds by EPA Method 1625. The instrument is to be calibrated with these compounds, and all procedures and quality control tests described in the Method must be performed.

2.0 SECTION MODIFICATIONS

NOTE: All section and figure numbers in this Attachment reference section and figure numbers in EPA Method 1625 Revision B unless noted otherwise. Sections not listed here remain unchanged.

Section 6.7 The stock standard solutions described in this section are modified such that the analytes in Tables 1 and 2 of this attachment are required in addition to those specified in the Method.

Section 6.8 The labeled compound spiking solution in this section is modified to include the labeled compounds listed in Tables 5 and 6 of this attachment.

Section 6.9 The secondary standard is modified to include the additional analytes listed in Tables 1 and 2 of this attachment.

Section 6.12 The solutions for obtaining authentic mass spectra are to include all additional analytes listed in Tables 1 and 2 of this attachment.

Section 6.13 The calibration solutions are modified to include the analytes listed in Tables 1 and 2 and the labeled compounds listed in Tables 5 and 6 of this attachment.

Section 6.14 The precision and recovery standard is modified to include the analytes listed in Tables 1 and 2 and the labeled compounds listed in Tables 5 and 6 of this attachment.

Section 6.15 The solutions containing the additional analytes listed in Tables 1 and 2 of this attachment are to be analyzed for stability.

Section 7.2.1 This section is modified to include the analytes listed in Tables 1 and 2 and the labeled compounds listed in Tables 5 and 6 of this attachment.

Section 7.4.5 This section is modified to include the analytes listed in Tables 1 and 2 and the labeled compounds listed in Tables 5 and 6 in the calibration.

Section 8.2 The initial precision and recovery (IPR) requirements are modified to include the analytes listed in Tables 1 and 2 and the labeled compounds listed in Tables 5 and 6 of this attachment. Additional IPR performance criteria are supplied in Table 7 of this attachment.

Section 8.3 The labeled compounds listed in Tables 3 and 4 of this attachment are to be included in the method performance tests. Additional method performance criteria are supplied in Table 7 of this attachment.

Section 8.5.2 The acceptance criteria for blanks includes the analytes listed in Tables 1 and 2 of this attachment.

Section 10.1.2 The labeled compound solution must include the labeled compounds listed in Tables 5 and 6 of this attachment.

Section 10.1.3 The precision and recovery standard must include the analytes listed in Tables 1 and 2 and the labeled compounds listed in Tables 5 and 6 of this attachment.

Section 12.5 Additional QC requirements for calibration verification are supplied in Table 7 of this attachment.

Section 12.7 Additional QC requirements for ongoing precision and recovery are supplied in Table 7 of this attachment.

[1] EPA Method 1625 Revision B, Semivolatile Organic Compounds by Isotope Dilution GC/MS, 40 CFR part 136, appendix A.

TABLE 1—BASE/NEUTRAL EXTRACTABLE COMPOUNDS

Compound	Pollutant	
	CAS Registry	EPA-EGD
acetophenone [1]	98–86–2	758
aniline [2]	62–53–3	757
-2,3-dichloroaniline [1]	608–27–5	578
-o-cresol [1]	95–48–7	771
pyridine [2]	110–86–1	1330

CAS = Chemical Abstracts Registry.
EGD = Effluent Guidelines Division.
[1] Analysis of this pollutant is approved only for the Centralized Waste Treatment industry.
[2] Analysis of this pollutant is approved only for the Centralized Waste Treatment and Landfills industries.

TABLE 2—ACID EXTRACTABLE COMPOUNDS

Compound	Pollutant	
	CAS Registry	EPA-EGD
p-cresol [1]	106–44–5	1744

CAS = Chemical Abstracts Registry.
EGD = Effluent Guidelines Division.
[1] Analysis of this pollutant is approved only for the Centralized Waste Treatment and Landfills industries.

TABLE 3—GAS CHROMATOGRAPHY [1] OF BASE/NEUTRAL EXTRACTABLE COMPOUNDS

EGD No.	Compound	Retention time [2]			Minimum level [3] (μg/L)
		Mean (sec)	EGD Ref	Relative	
758	acetophenone [4]	818	658	1.003–1.005	10
757	aniline [5]	694	657	0.994–1.023	10
578	2,3-dichloroaniline [4]	1160	164	1.003–1.007	10
771	o-cresol [4]	814	671	1.005–1.009	10
1330	pyridine [5]	378	1230	1.005–1.011	10

EGD = Effluent Guidelines Division.
[1] The data presented in this table were obtained under the chromatographic conditions given in the footnote to Table 3 of EPA Method 1625B.
[2] Retention times are approximate and are intended to be consistent with the retention times for the analytes in EPA Method 1625B.
[3] See the definition in footnote 2 to Table 3 of EPA Method 1625B.
[4] Analysis of this pollutant is approved only for the Centralized Waste Treatment industry.
[5] Analysis of this pollutant is approved only for the Centralized Waste Treatment and Landfills industries.

TABLE 4—GAS CHROMATOGRAPHY [1] OF ACID EXTRACTABLE COMPOUNDS

EGD No.	Compound	Retention time [2]			Minimum level (μ/L) [3]
		Mean (sec)	EGD Ref	Relative	
1744	p-cresol [4]	834	1644	1.004–1.008	20

EGD = Effluent Guidelines Division.
[1] The data presented in this table were obtained under the chromatographic conditions given in the footnote to Table 4 of EPA Method 1625B.
[2] Retention times are approximate and are intended to be consistent with the retention times for the analytes in EPA Method 1625B.
[3] See the definition in footnote 2 to Table 4 of EPA Method 1625B.
[4] Analysis of this pollutant is approved only for the Centralized Waste Treatment and Landfills industries.

TABLE 5—BASE/NEUTRAL EXTRACTABLE COMPOUND CHARACTERISTIC M/Z'S

Compound	Labeled Analog	Primary m/z [1]
acetophenone [2]	d_5	105/110
aniline [3]	d_7	93/100
o-cresol [2]	d_7	108/116
2,3-dichloroaniline [2]	n/a	161
pyridine [3]	d_5	79/84

m/z = mass to charge ratio.

[1] Native/labeled.
[2] Analysis of this pollutant is approved only for the Centralized Waste Treatment industry.
[3] Analysis of this pollutant is approved only for the Centralized Waste Treatment and Landfills industries.

TABLE 6—ACID EXTRACTABLE COMPOUND CHARACTERISTIC M/Z'S

Compound	Labeled Analog	Primary m/z [1]
p-cresol [2]	d_7	108/116

m/z = mass to charge ratio.
[1] Native/labeled.
[2] Analysis of this pollutant is approved only for the Centralized Waste Treatment and Landfills industries.

TABLE 7—ACCEPTANCE CRITERIA FOR PERFORMANCE TESTS

EGD No.	Compound	Acceptance criteria			Calibration verification sec. 12.5 µg/mL)	On-going accuracy sec. 12.7 R (µg/L)
		Initial precision and accuracy section 8.2 (µg/L)		Labeled compound recovery sec. 8.3 and 14.2 P (percent)		
		s (µg/L)	X			
758	acetophenone [1]	34	44–167	.....	85–115	45–162
658	acetophenone-d_5 [1]	51	23–254	45–162	85–115	22–264
757	aniline [2]	32	30–171	.....	85–115	33–154
657	aniline-d_7 [2]	71	15–278	33–154	85–115	12–344
771	o-cresol [1]	40	31–226	.....	85–115	35–196
671	o-cresol-d_7 [1]	23	30–146	35–196	85–115	31–142
1744	p-cresol [2]	59	54–140	.....	85–115	37–203
1644	p-cresol-d_7 [2]	22	11–618	37–203	85–115	16–415
578	2,3-dichloroaniline [1]	13	40–160	.....	85–115	44–144
1330	pyridine [2]	28	10–421	.....	83–117	18–238
1230	pyridine-d_5 [2]	ns	7–392	19–238	85–115	4–621

s = Standard deviation of four recovery measurements.
X = Average recovery for four recovery measurements.
EGD = Effluent Guidelines Division.
ns = no specification; limit is outside the range that can be measured reliably.
[1] Analysis of this pollutant is approved only for the Centralized Waste Treatment industry.
[2] Analysis of this pollutant is approved only for the Centralized Waste Treatment and Landfills industries.

[49 FR 43261, Oct. 26, 1984; 50 FR 692, 695, Jan. 4, 1985, as amended at 51 FR 23702, June 30, 1986; 62 FR 48405, Sept. 15, 1997; 65 FR 3044, Jan. 19, 2000; 65 FR 81295, 81298, Dec. 22, 2000; 82 FR 40875, Aug. 28, 2017]

APPENDIX B TO PART 136—DEFINITION AND PROCEDURE FOR THE DETERMINATION OF THE METHOD DETECTION LIMIT—REVISION 2

Definition

The method detection limit (MDL) is defined as the minimum measured concentration of a substance that can be reported with 99% confidence that the measured concentration is distinguishable from method blank results.

I. Scope and Application

(1) The MDL procedure is designed to be a straightforward technique for estimation of the detection limit for a broad variety of physical and chemical methods. The procedure requires a complete, specific, and well-defined analytical method. It is essential that all sample processing steps used by the laboratory be included in the determination of the method detection limit.

(2) The MDL procedure is *not* applicable to methods that do not produce results with a continuous distribution, such as, but not limited to, methods for whole effluent toxicity, presence/absence methods, and microbiological methods that involve counting colonies. The MDL procedure also is *not* applicable to measurements such as, but not limited to, biochemical oxygen demand, color, pH, specific conductance, many titration methods, and any method where low-level spiked samples cannot be prepared. Except as described in the addendum, for the purposes of this procedure, ''spiked samples'' are prepared from a clean reference matrix, such as reagent water, spiked with a known and consistent quantity of the analyte. MDL determinations using spiked samples may not be appropriate for all gravimetric methods (e.g., residue or total suspended solids), but an MDL based on method blanks can be determined in such instances.

II. Procedure

(1) Estimate the initial MDL using one or more of the following:

(a) The mean determined concentration plus three times the standard deviation of a set of method blanks.

(b) The concentration value that corresponds to an instrument signal-to-noise ratio in the range of 3 to 5.

(c) The concentration equivalent to three times the standard deviation of replicate instrumental measurements of spiked blanks.

(d) That region of the calibration where there is a significant change in sensitivity, *i.e.*, a break in the slope of the calibration.

(e) Instrumental limitations.

(f) Previously determined MDL.

NOTE: It is recognized that the experience of the analyst is important to this process. However, the analyst should include some or all of the above considerations in the initial estimate of the MDL.

(2) Determine the initial MDL.

NOTE: The Initial MDL is used when the laboratory does not have adequate data to perform the Ongoing Annual Verification specified in Section (4), typically when a new method is implemented or if a method was rarely used in the last 24 months.

(a) Select a spiking level, typically 2—10 times the estimated MDL in Section 1. Spiking levels in excess of 10 times the estimated detection limit may be required for analytes with very poor recovery (e.g., for an analyte with 10% recovery, spiked at 100 micrograms/L, with mean recovery of 10 micrograms/L; the calculated MDL may be around 3 micrograms/L. Therefore, in this example, the spiking level would be 33 times the MDL, but spiking lower may result in no recovery at all).

(b) Process a minimum of seven spiked samples and seven method blank samples through all steps of the method. The samples used for the MDL must be prepared in at least three batches on three separate calendar dates and analyzed on three separate calendar dates. (Preparation and analysis may be on the same day.) Existing data may be used, if compliant with the requirements for at least three batches, and generated within the last twenty four months. The most recent available data for method blanks and spiked samples must be used. Statistical outlier removal procedures should not be used to remove data for the initial MDL determination, since the total number of observations is small and the purpose of the MDL procedure is to capture routine method variability. However, documented instances of gross failures (e.g., instrument malfunctions, mislabeled samples, cracked vials) may be excluded from the calculations, provided that at least seven spiked samples and seven method blanks are available. (The rationale for removal of specific outliers must be documented and maintained on file with the results of the MDL determination.)

(i) If there are multiple instruments that will be assigned the same MDL, then the sample analyses must be distributed across all of the instruments.

(ii) A minimum of two spiked samples and two method blank samples prepared and analyzed on different calendar dates is required for each instrument. Each analytical batch may contain one spiked sample and one method blank sample run together. A spiked sample and a method blank sample may be analyzed in the same batch, but are not required to be.

(iii) The same prepared extract may be analyzed on multiple instruments so long as the minimum requirement of seven preparations in at least three separate batches is maintained.

(c) Evaluate the spiking level: If any result for any individual analyte from the spiked samples does not meet the method qualitative identification criteria or does not provide a numerical result greater than zero, then repeat the spiked samples at a higher concentration. (Qualitative identification criteria are a set of rules or guidelines for establishing the identification or presence of an analyte using a measurement system. Qualitative identification does not ensure that quantitative results for the analyte can be obtained.)

(d) Make all computations as specified in the analytical method and express the final results in the method-specified reporting units.

(i) Calculate the sample standard deviation (S) of the replicate spiked sample measurements and the sample standard deviation of the replicate method blank measurements from all instruments to which the MDL will be applied.

(ii) Compute the MDL_s (the MDL based on spiked samples) as follows:

$$MDL_S = t_{(n-1,\ 1-\alpha = 0.99)} S_s$$

Where:

MDL_s = the method detection limit based on spiked samples

$t_{(n-1,\ 1-\alpha = 0.99)}$ = the Student's t-value appropriate for a single-tailed 99th percentile t statistic and a standard deviation estimate with n-1 degrees of freedom. See Addendum Table 1.

S_s = sample standard deviation of the replicate spiked sample analyses.

(iii) Compute the MDL_b (the MDL based on method blanks) as follows:

(A) If none of the method blanks give numerical results for an individual analyte, the MDL_b does not apply. A numerical result includes both positive and negative results, including results below the current MDL, but not results of ''ND'' (not detected) commonly

observed when a peak is not present in chromatographic analysis.

(B) If some (but not all) of the method blanks for an individual analyte give numerical results, set the MDL_b equal to the highest method blank result. If more than 100 method blanks are available, set MDL_b to the level that is no less than the 99th percentile of the method blank results. For ''n'' method blanks where n ≥ 100, sort the method blanks in rank order. The (n * 0.99) ranked method blank result (round to the nearest whole number) is the MDL_b. For example, to find MDL_b from a set of 164 method blanks where the highest ranked method blank results are . . . 1.5, 1.7, 1.9, 5.0, and 10, then 164 × 0.99 = 162.36 which rounds to the 162nd method blank result. Therefore, MDL_b is 1.9 for n = 164 (10 is the 164th result, 5.0 is the 163rd result, and 1.9 is the 162nd result). Alternatively, you may use spreadsheet algorithms to calculate the 99th percentile to interpolate between the ranks more precisely.

(C) If all of the method blanks for an individual analyte give numerical results, then calculate the MDL_b as:

$$MDL_b = \overline{X} + t_{n-1,1-\alpha=(0.99)} S_b$$

Where:

MDL_b = the MDL based on method blanks

$\overline{X}$ = mean of the method blank results (use zero in place of the mean if the mean is negative)

$t_{(n-1,\ 1\alpha\ =\ 0.99)}$ = the Student's t-value appropriate for the single-tailed 99th percentile t statistic and a standard deviation estimate with n−1 degrees of freedom. See Addendum Table 1.

S_b = sample standard deviation of the replicate method blank sample analyses.

NOTE: If 100 or more method blanks are available, as an option, MDL_b may be set to the concentration that is greater than or equal to the 99th percentile of the method blank results, as described in Section (2)(d)(iii)(B).

(e) Select the greater of MDL_s or MDL_b as the initial MDL.

(3) Ongoing Data Collection.

(a) During any quarter in which samples are being analyzed, prepare and analyze a minimum of two spiked samples on each instrument, in separate batches, using the same spiking concentration used in Section 2. If any analytes are repeatedly not detected in the quarterly spiked sample analyses, or do not meet the qualitative identification criteria of the method (see section 2(c) of this procedure), then this is an indication that the spiking level is not high enough and should be adjusted upward. Note that it is not necessary to analyze additional method blanks together with the spiked samples, the method blank population should include all of the routine method blanks analyzed with each batch during the course of sample analysis.

(b) Ensure that at least seven spiked samples and seven method blanks are completed for the annual verification. If only one instrument is in use, a minimum of seven spikes are still required, but they may be drawn from the last two years of data collection.

(c) At least once per year, re-evaluate the spiking level.

(i) If more than 5% of the spiked samples do not return positive numerical results that meet all method qualitative identification criteria, then the spiking level must be increased and the initial MDL re-determined following the procedure in section 2.

(ii) [Reserved]

(d) If the method is altered in a way that can be reasonably expected to change its sensitivity, then re-determine the initial MDL according to section 2, and the restart the ongoing data collection.

(e) If a new instrument is added to a group of instruments whose data are being pooled to create a single MDL, analyze a minimum of two spiked replicates and two method blank replicates on the new instrument. If both method blank results are below the existing MDL, then the existing MDL_b is validated. Combine the new spiked sample results to the existing spiked sample results and recalculate the MDL_s as in Section 4. If the recalculated MDL_s does not vary by more than the factor specified in section 4(f) of this procedure, then the existing MDL_s is validated. If either of these two conditions is not met, then calculate a new MDL following the instructions in section 2.

(4) Ongoing Annual Verification.

(a) At least once every thirteen months, re-calculate MDL_s and MDL_b from the collected spiked samples and method blank results using the equations in section 2.

(b) Include data generated within the last twenty four months, but only data with the same spiking level. Only documented instances of gross failures (e.g., instrument malfunctions, mislabeled samples, cracked vials) may be excluded from the calculations. (The rationale for removal of specific outliers must be documented and maintained on file with the results of the MDL determination.) If the laboratory believes the sensitivity of the method has changed significantly, then the most recent data available may be used, maintaining compliance with the requirement for at least seven replicates in three separate batches on three separate days (see section 2b).

(c) Include the initial MDL spiked samples, if the data were generated within twenty four months.

(d) Only use data associated with acceptable calibrations and batch QC. Include all routine data, with the exception of batches that are rejected and the associated samples reanalyzed. If the method has been altered in a way that can be reasonably expected to

change its sensitivity, then use only data collected after the change.

(e) Ideally, use all method blank results from the last 24 months for the MDL_b calculation. The laboratory has the option to use only the last six months of method blank data or the fifty most recent method blanks, whichever criteria yields the greater number of method blanks.

(f) The verified MDL is the greater of the MDL_s or MDL_b. If the verified MDL is within 0.5 to 2.0 times the existing MDL, and fewer than 3% of the method blank results (for the individual analyte) have numerical results above the existing MDL, then the existing MDL may optionally be left unchanged. Otherwise, adjust the MDL to the new verification MDL. (The range of 0.5 to 2.0 approximates the 95th percentile confidence interval for the initial MDL determination with six degrees of freedom.)

ADDENDUM TO SECTION II: DETERMINATION OF THE MDL FOR A SPECIFIC MATRIX

The MDL may be determined in a specific sample matrix as well as in reagent water.

(1) Analyze the sample matrix to determine the native (background) concentration of the analyte(s) of interest.

(2) If the response for the native concentration is at a signal-to-noise ratio of approximately 5–20, determine the matrix-specific MDL according to Section 2 but without spiking additional analyte.

(3) Calculate MDL_b using the method blanks, not the sample matrix.

(4) If the signal-to-noise ratio is less than 5, then the analyte(s) should be spiked into the sample matrix to obtain a concentration that will give results with a signal-to-noise ratio of approximately 10–20.

(5) If the analytes(s) of interest have signal-to-noise ratio(s) greater than approximately 20, then the resulting MDL is likely to be biased high.

TABLE 1—SINGLE-TAILED 99th PERCENTILE t STATISTIC

Number of replicates	Degrees of freedom (n − 1)	$t_{(n-1,\ 0.99)}$
7	6	3.143
8	7	2.998
9	8	2.896
10	9	2.821
11	10	2.764
16	15	2.602
21	20	2.528
26	25	2.485
31	30	2.457
32	31	2.453
48	47	2.408
50	49	2.405
61	60	2.390
64	63	2.387
80	79	2.374
96	95	2.366
100	99	2.365

III. Documentation

The analytical method used must be specifically identified by number or title and the MDL for each analyte expressed in the appropriate method reporting units. Data and calculations used to establish the MDL must be able to be reconstructed upon request. The sample matrix used to determine the MDL must also be identified with MDL value. Document the mean spiked and recovered analyte levels with the MDL. The rationale for removal of outlier results, if any, must be documented and maintained on file with the results of the MDL determination.

[82 FR 40939, Aug. 28, 2017]

APPENDIX C TO PART 136—DETERMINATION OF METALS AND TRACE ELEMENTS IN WATER AND WASTES BY INDUCTIVELY COUPLED PLASMA-ATOMIC EMISSION SPECTROMETRY METHOD 200.7

1.0 Scope and Application

1.1 Inductively coupled plasma-atomic emission spectrometry (ICP–AES) is used to determine metals and some nonmetals in solution. This method is a consolidation of existing methods for water, wastewater, and solid wastes.[1–4] (For analysis of petroleum products see References 5 and 6, Section 16.0). This method is applicable to the following analytes:

Analyte	Chemical abstract services registry number (CASRN)
Aluminum (Al)	7429–90–5
Antimony (Sb)	7440–36–0
Arsenic (As)	7440–38–2
Barium (Ba)	7440–39–3
Beryllium (Be)	7440–41–7
Boron (B)	7440–42–8
Cadmium (Cd)	7440–43–9
Calcium (Ca)	7440–70–2
Cerium[a] (Cr)	7440–45–1
Chromium (Cr)	7440–47–3
Cobalt (Co)	7440–48–4
Copper (Cu)	7440–50–8
Iron (Fe)	7439–89–6
Lead (Pb)	7439–92–1
Lithium (Li)	7439–93–2
Magnesium (Mg)	7439–95–4
Manganese (Mn)	7439–96–5
Mercury (Hg)	7439–97–6
Molybdenum (Mo)	7439–98–7
Nickel (Ni)	7440–02–0
Phosphorus (P)	7723–14–0
Potassium (K)	7440–09–7
Selenium (Se)	7782–49–2
Silica[b] (SiO_2)	7631–86–9
Silver (Ag)	7440–22–4
Sodium (Na)	7440–23–5
Strontium (Sr)	7440–24–6
Thallium (Tl)	7440–28–0
Tin (Sn)	7440–31–5
Titanium (Ti)	7440–32–6
Vanadium (V)	7440–62–2
Zinc (Zn)	7440–66–6

[a] Cerium has been included as method analyte for correction of potential interelement spectral interference.
[b] This method is *not* suitable for the determination of silica in solids.

1.2 For reference where this method is approved for use in compliance monitoring programs [e.g., Clean Water Act (NPDES) or Safe Drinking Water Act (SDWA)] consult both the appropriate sections of the Code of Federal Regulation (40 CFR Part 136 Table 1B for NPDES, and Part 141 § 141.23 for drinking water), and the latest FEDERAL REGISTER announcements.

1.3 ICP–AES can be used to determine dissolved analytes in aqueous samples after suitable filtration and acid preservation. To reduce potential interferences, dissolved solids should be <0.2% (w/v) (Section 4.2).

1.4 With the exception of silver, where this method is approved for the determination of certain metal and metalloid contaminants in drinking water, samples may be analyzed directly by pneumatic nebulization without acid digestion if the sample has been properly preserved with acid and has turbidity of <1 NTU at the time of analysis. This total recoverable determination procedure is referred to as ''direct analysis''. However, in the determination of some primary drinking water metal contaminants, preconcentration of the sample may be required prior to analysis in order to meet drinking water acceptance performance criteria (Sections 11.2.2 through 11.2.7).

1.5 For the determination of total recoverable analytes in aqueous and solid samples a digestion/extraction is required prior to analysis when the elements are not in solution (e.g., soils, sludges, sediments and aqueous samples that may contain particulate and suspended solids). Aqueous samples containing suspended or particulate material 1% (w/v) should be extracted as a solid type sample.

1.6 When determining boron and silica in aqueous samples, only plastic, PTFE or quartz labware should be used from time of sample collection to completion of analysis. For accurate determination of boron in solid samples only quartz or PTFE beakers should be used during acid extraction with immediate transfer of an extract aliquot to a plastic centrifuge tube following dilution of the extract to volume. When possible, borosilicate glass should be avoided to prevent contamination of these analytes.

1.7 Silver is only slightly soluble in the presence of chloride unless there is a sufficient chloride concentration to form the soluble chloride complex. Therefore, low recoveries of silver may occur in samples, fortified sample matrices and even fortified blanks if determined as a dissolved analyte or by ''direct analysis'' where the sample has not been processed using the total recoverable mixed acid digestion. For this reason it is recommended that samples be digested prior to the determination of silver. The total recoverable sample digestion procedure given in this method is suitable for the determination of silver in aqueous samples containing concentrations up to 0.1 mg/L. For the analysis of wastewater samples containing higher concentrations of silver, succeeding smaller volume, well mixed aliquots should be prepared until the analysis solution contains <0.1 mg/L silver. The extraction of solid samples containing concentrations of silver >50 mg/kg should be treated in a similar manner. Also, the extraction of tin from solid samples should be prepared again using aliquots <1 g when determined sample concentrations exceed 1%.

1.8 The total recoverable sample digestion procedure given in this method will solubilize and hold in solution only minimal concentrations of barium in the presence of free sulfate. For the analysis of barium in samples having varying and unknown concentrations of sulfate, analysis should be completed as soon as possible after sample preparation.

1.9 The total recoverable sample digestion procedure given in this method is not suitable for the determination of volatile organo-mercury compounds. However, if digestion is not required (turbidity <1 NTU), the combined concentrations of inorganic and organo-mercury in solution can be determined by ''direct analysis'' pneumatic nebulization provided the sample solution is adjusted to contain the same mixed acid

(HNO_3 + HCl) matrix as the total recoverable calibration standards and blank solutions.

1.10 Detection limits and linear ranges for the elements will vary with the wavelength selected, the spectrometer, and the matrices. Table 1 provides estimated instrument detection limits for the listed wavelengths.[7] However, actual method detection limits and linear working ranges will be dependent on the sample matrix, instrumentation, and selected operating conditions.

1.11 Users of the method data should state the data-quality objectives prior to analysis. Users of the method must document and have on file the required initial demonstration performance data described in Section 9.2 prior to using the method for analysis.

2.0 Summary of Method

2.1 An aliquot of a well mixed, homogeneous aqueous or solid sample is accurately weighed or measured for sample processing. For total recoverable analysis of a solid or an aqueous sample containing undissolved material, analytes are first solubilized by gentle refluxing with nitric and hydrochloric acids. After cooling, the sample is made up to volume, is mixed and centrifuged or allowed to settle overnight prior to analysis. For the determination of dissolved analytes in a filtered aqueous sample aliquot, or for the ''direct analysis'' total recoverable determination of analytes in drinking water where sample turbidity is <1 NTU, the sample is made ready for analysis by the appropriate addition of nitric acid, and then diluted to a predetermined volume and mixed before analysis.

2.2 The analysis described in this method involves multielemental determinations by ICP–AES using sequential or simultaneous instruments. The instruments measure characteristic atomic-line emission spectra by optical spectrometry. Samples are nebulized and the resulting aerosol is transported to the plasma torch. Element specific emission spectra are produced by a radio-frequency inductively coupled plasma. The spectra are dispersed by a grating spectrometer, and the intensities of the line spectra are monitored at specific wavelengths by a photosensitive device. Photocurrents from the photosensitive device are processed and controlled by a computer system. A background correction technique is required to compensate for variable background contribution to the determination of the analytes. Background must be measured adjacent to the analyte wavelength during analysis. Various interferences must be considered and addressed appropriately as discussed in Sections 4.0, 7.0, 9.0, 10.0, and 11.0.

3.0 Definitions

3.1 Calibration Blank—A volume of reagent water acidified with the same acid matrix as in the calibration standards. The calibration blank is a zero standard and is used to calibrate the ICP instrument (Section 7.10.1).

3.2 Calibration Standard (CAL)—A solution prepared from the dilution of stock standard solutions. The CAL solutions are used to calibrate the instrument response with respect to analyte concentration (Section 7.9).

3.3 Dissolved Analyte—The concentration of analyte in an aqueous sample that will pass through a 0.45 µm membrane filter assembly prior to sample acidification (Section 11.1).

3.4 Field Reagent Blank (FRB)—An aliquot of reagent water or other blank matrix that is placed in a sample container in the laboratory and treated as a sample in all respects, including shipment to the sampling site, exposure to the sampling site conditions, storage, preservation, and all analytical procedures. The purpose of the FRB is to determine if method analytes or other interferences are present in the field environment (Section 8.5).

3.5 Instrument Detection Limit (IDL)—The concentration equivalent to the analyte signal which is equal to three times the standard deviation of a series of 10 replicate measurements of the calibration blank signal at the same wavelength (Table 1.).

3.6 Instrument Performance Check (IPC) Solution—A solution of method analytes, used to evaluate the performance of the instrument system with respect to a defined set of method criteria (Sections 7.11 and 9.3.4).

3.7 Internal Standard—Pure analyte(s) added to a sample, extract, or standard solution in known amount(s) and used to measure the relative responses of other method analytes that are components of the same sample or solution. The internal standard must be an analyte that is not a sample component (Section 11.5).

3.8 Laboratory Duplicates (LD1 and LD2)—Two aliquots of the same sample taken in the laboratory and analyzed separately with identical procedures. Analyses of LD1 and LD2 indicate precision associated with laboratory procedures, but not with sample collection, preservation, or storage procedures.

3.9 Laboratory Fortified Blank (LFB)—An aliquot of LRB to which known quantities of the method analytes are added in the laboratory. The LFB is analyzed exactly like a sample, and its purpose is to determine whether the methodology is in control and whether the laboratory is capable of making accurate and precise measurements (Sections 7.10.3 and 9.3.2).

3.10 Laboratory Fortified Sample Matrix (LFM)—An aliquot of an environmental sample to which known quantities of the method analytes are added in the laboratory. The

LFM is analyzed exactly like a sample, and its purpose is to determine whether the sample matrix contributes bias to the analytical results. The background concentrations of the analytes in the sample matrix must be determined in a separate aliquot and the measured values in the LFM corrected for background concentrations (Section 9.4).

3.11 Laboratory Reagent Blank (LRB)—An aliquot of reagent water or other blank matrices that are treated exactly as a sample including exposure to all glassware, equipment, solvents, reagents, and internal standards that are used with other samples. The LRB is used to determine if method analytes or other interferences are present in the laboratory environment, reagents, or apparatus (Sections 7.10.2 and 9.3.1).

3.12 Linear Dynamic Range (LDR)—The concentration range over which the instrument response to an analyte is linear (Section 9.2.2).

3.13 Method Detection Limit (MDL)—The minimum concentration of an analyte that can be identified, measured, and reported with 99% confidence that the analyte concentration is greater than zero (Section 9.2.4 and Table 4.).

3.14 Plasma Solution—A solution that is used to determine the optimum height above the work coil for viewing the plasma (Sections 7.15 and 10.2.3).

3.15 Quality Control Sample (QCS)—A solution of method analytes of known concentrations which is used to fortify an aliquot of LRB or sample matrix. The QCS is obtained from a source external to the laboratory and different from the source of calibration standards. It is used to check either laboratory or instrument performance (Sections 7.12 and 9.2.3).

3.16 Solid Sample—For the purpose of this method, a sample taken from material classified as soil, sediment or sludge.

3.17 Spectral Interference Check (SIC) Solution—A solution of selected method analytes of higher concentrations which is used to evaluate the procedural routine for correcting known interelement spectral interferences with respect to a defined set of method criteria (Sections 7.13, 7.14 and 9.3.5).

3.18 Standard Addition—The addition of a known amount of analyte to the sample in order to determine the relative response of the detector to an analyte within the sample matrix. The relative response is then used to assess either an operative matrix effect or the sample analyte concentration (Sections 9.5.1 and 11.5).

3.19 Stock Standard Solution—A concentrated solution containing one or more method analytes prepared in the laboratory using assayed reference materials or purchased from a reputable commercial source (Section 7.8).

3.20 Total Recoverable Analyte—The concentration of analyte determined either by ''direct analysis'' of an unfiltered acid preserved drinking water sample with turbidity of <1 NTU (Section 11.2.1), or by analysis of the solution extract of a solid sample or an unfiltered aqueous sample following digestion by refluxing with hot dilute mineral acid(s) as specified in the method (Sections 11.2 and 11.3).

3.21 Water Sample—For the purpose of this method, a sample taken from one of the following sources: drinking, surface, ground, storm runoff, industrial or domestic wastewater.

4.0 Interferences

4.1 Spectral interferences are caused by background emission from continuous or recombination phenomena, stray light from the line emission of high concentration elements, overlap of a spectral line from another element, or unresolved overlap of molecular band spectra.

4.1.1 Background emission and stray light can usually be compensated for by subtracting the background emission determined by measurement(s) adjacent to the analyte wavelength peak. Spectral scans of samples or single element solutions in the analyte regions may indicate not only when alternate wavelengths are desirable because of severe spectral interference, but also will show whether the most appropriate estimate of the background emission is provided by an interpolation from measurements on both sides of the wavelength peak or by the measured emission on one side or the other. The location(s) selected for the measurement of background intensity will be determined by the complexity of the spectrum adjacent to the wavelength peak. The location(s) used for routine measurement must be free of offline spectral interference (interelement or molecular) or adequately corrected to reflect the same change in background intensity as occurs at the wavelength peak.

4.1.2 Spectral overlaps may be avoided by using an alternate wavelength or can be compensated for by equations that correct for interelement contributions, which involves measuring the interfering elements. Some potential on-line spectral interferences observed for the recommended wavelengths are given in Table 2. When operative and uncorrected, these interferences will produce false-positive determinations and be reported as analyte concentrations. The interferences listed are only those that occur between method analytes. Only interferences of a direct overlap nature that were observed with a single instrument having a working resolution of 0.035 nm are listed. More extensive information on interferant effects at various wavelengths and resolutions is available in Boumans' Tables.[8] Users may apply interelement correction factors determined on their instruments within tested concentration ranges to compensate (off-line or

on-line) for the effects of interfering elements.

4.1.3 When interelement corrections are applied, there is a need to verify their accuracy by analyzing spectral interference check solutions as described in Section 7.13. Interelement corrections will vary for the same emission line among instruments because of differences in resolution, as determined by the grating plus the entrance and exit slit widths, and by the order of dispersion. Interelement corrections will also vary depending upon the choice of background correction points. Selecting a background correction point where an interfering emission line may appear should be avoided when practical. Interelement corrections that constitute a major portion of an emission signal may not yield accurate data. Users should not forget that some samples may contain uncommon elements that could contribute spectral interferences.[7 8]

4.1.4 The interference effects must be evaluated for each individual instrument whether configured as a sequential or simultaneous instrument. For each instrument, intensities will vary not only with optical resolution but also with operating conditions (such as power, viewing height and argon flow rate). When using the recommended wavelengths given in Table 1, the analyst is required to determine and document for each wavelength the effect from the known interferences given in Table 2, and to utilize a computer routine for their automatic correction on all analyses. To determine the appropriate location for off-line background correction, the user must scan the area on either side adjacent to the wavelength and record the apparent emission intensity from all other method analytes. This spectral information must be documented and kept on file. The location selected for background correction must be either free of off-line interelement spectral interference or a computer routine must be used for their automatic correction on all determinations. If a wavelength other than the recommended wavelength is used, the user must determine and document both the on-line and off-line spectral interference effect from all method analytes and provide for their automatic correction on all analyses. Tests to determine the spectral interference must be done using analyte concentrations that will adequately describe the interference. Normally, 100 mg/L single element solutions are sufficient, however, for analytes such as iron that may be found at high concentration a more appropriate test would be to use a concentration near the upper LDR limit. See Section 10.4 for required spectral interference test criteria.

4.1.5 When interelement corrections are not used, either on-going SIC solutions (Section 7.14) must be analyzed to verify the absence of interelement spectral interference or a computer software routine must be employed for comparing the determinative data to limits files for notifying the analyst when an interfering element is detected in the sample at a concentration that will produce either an apparent false positive concentration, greater than the analyte IDL, or false negative analyte concentration, less than the 99% lower control limit of the calibration blank. When the interference accounts for 10% or more of the analyte concentration, either an alternate wavelength free of interference or another approved test procedure must be used to complete the analysis. For example, the copper peak at 213.853 nm could be mistaken for the zinc peak at 213.856 nm in solutions with high copper and low zinc concentrations. For this example, a spectral scan in the 213.8 nm region would not reveal the misidentification because a single peak near the zinc location would be observed. The possibility of this misidentification of copper for the zinc peak at 213.856 nm can be identified by measuring the copper at another emission line, e.g., 324.754 nm. Users should be aware that, depending upon the instrumental resolution, alternate wavelengths with adequate sensitivity and freedom from interference may not be available for all matrices. In these circumstances the analyte must be determined using another approved test procedure.

4.2 Physical interferences are effects associated with the sample nebulization and transport processes. Changes in viscosity and surface tension can cause significant inaccuracies, especially in samples containing high dissolved solids or high acid concentrations. If physical interferences are present, they must be reduced by such means as a high-solids nebulizer, diluting the sample, using a peristaltic pump, or using an appropriate internal standard element. Another problem that can occur with high dissolved solids is salt buildup at the tip of the nebulizer, which affects aerosol flow rate and causes instrumental drift. This problem can be controlled by a high-solids nebulizer, wetting the argon prior to nebulization, using a tip washer, or diluting the sample. Also, it has been reported that better control of the argon flow rates, especially for the nebulizer, improves instrument stability and precision; this is accomplished with the use of mass flow controllers.

4.3 Chemical interferences include molecular-compound formation, ionization effects, and solute-vaporization effects. Normally, these effects are not significant with the ICP–AES technique. If observed, they can be minimized by careful selection of operating conditions (such as incident power and observation height), by buffering of the sample, by matrix matching, and by standard-addition

procedures. Chemical interferences are highly dependent on matrix type and the specific analyte element.

4.4 Memory interferences result when analytes in a previous sample contribute to the signals measured in a new sample. Memory effects can result from sample deposition on the uptake tubing to the nebulizer, and from the buildup of sample material in the plasma torch and spray chamber. The site where these effects occur is dependent on the element and can be minimized by flushing the system with a rinse blank between samples (Section 7.10.4). The possibility of memory interferences should be recognized within an analytical run and suitable rinse times should be used to reduce them. The rinse times necessary for a particular element must be estimated prior to analysis. This may be achieved by aspirating a standard containing elements corresponding to either their LDR or a concentration ten times those usually encountered. The aspiration time should be the same as a normal sample analysis period, followed by analysis of the rinse blank at designated intervals. The length of time required to reduce analyte signals to within a factor of two of the method detection limit, should be noted. Until the required rinse time is established, this method requires a rinse period of at least 60 seconds between samples and standards. If a memory interference is suspected, the sample must be re-analyzed after a long rinse period.

5.0 Safety

5.1 The toxicity or carcinogenicity of each reagent used in this method have not been fully established. Each chemical should be regarded as a potential health hazard and exposure to these compounds should be as low as reasonably achievable. Each laboratory is responsible for maintaining a current awareness file of OSHA regulations regarding the safe handling of the chemicals specified in this method.[9–12] A reference file of material data handling sheets should also be made available to all personnel involved in the chemical analysis. Specifically, concentrated nitric and hydrochloric acids present various hazards and are moderately toxic and extremely irritating to skin and mucus membranes. Use these reagents in a fume hood whenever possible and if eye or skin contact occurs, flush with large volumes of water. Always wear safety glasses or a shield for eye protection, protective clothing and observe proper mixing when working with these reagents.

5.2 The acidification of samples containing reactive materials may result in the release of toxic gases, such as cyanides or sulfides. Acidification of samples should be done in a fume hood.

5.3 All personnel handling environmental samples known to contain or to have been in contact with human waste should be immunized against known disease causative agents.

5.4 The inductively coupled plasma should only be viewed with proper eye protection from the ultraviolet emissions.

5.5 It is the responsibility of the user of this method to comply with relevant disposal and waste regulations. For guidance see Sections 14.0 and 15.0.

6.0 Equipment and Supplies

6.1 Inductively coupled plasma emission spectrometer:

6.1.1 Computer-controlled emission spectrometer with background-correction capability.

The spectrometer must be capable of meeting and complying with the requirements described and referenced in Section 2.2.

6.1.2 Radio-frequency generator compliant with FCC regulations.

6.1.3 Argon gas supply—High purity grade (99.99%). When analyses are conducted frequently, liquid argon is more economical and requires less frequent replacement of tanks than compressed argon in conventional cylinders.

6.1.4 A variable speed peristaltic pump is required to deliver both standard and sample solutions to the nebulizer.

6.1.5 (Optional) Mass flow controllers to regulate the argon flow rates, especially the aerosol transport gas, are highly recommended. Their use will provide more exacting control of reproducible plasma conditions.

6.2 Analytical balance, with capability to measure to 0.1 mg, for use in weighing solids, for preparing standards, and for determining dissolved solids in digests or extracts.

6.3 A temperature adjustable hot plate capable of maintaining a temperature of 95 °C.

6.4 (Optional) A temperature adjustable block digester capable of maintaining a temperature of 95 °C and equipped with 250 mL constricted digestion tubes.

6.5 (Optional) A steel cabinet centrifuge with guard bowl, electric timer and brake.

6.6 A gravity convection drying oven with thermostatic control capable of maintaining 180 °C ±5 °C.

6.7 (Optional) An air displacement pipetter capable of delivering volumes ranging from 0.1–2500 µL with an assortment of high quality disposable pipet tips.

6.8 Mortar and pestle, ceramic or nonmetallic material.

6.9 Polypropylene sieve, 5-mesh (4 mm opening).

6.10 Labware—For determination of trace levels of elements, contamination and loss are of prime consideration. Potential contamination sources include improperly cleaned laboratory apparatus and general

contamination within the laboratory environment from dust, etc. A clean laboratory work area designated for trace element sample handling must be used. Sample containers can introduce positive and negative errors in the determination of trace elements by contributing contaminants through surface desorption or leaching, or depleting element concentrations through adsorption processes. All reusable labware (glass, quartz, polyethylene, PTFE, FEP, etc.) should be sufficiently clean for the task objectives. Several procedures found to provide clean labware include washing with a detergent solution, rinsing with tap water, soaking for four hours or more in 20% (v/v) nitric acid or a mixture of HNO_3 and HCl (1 + 2 + 9), rinsing with reagent water and storing clean.[2 3] Chromic acid cleaning solutions must be avoided because chromium is an analyte.

6.10.1 Glassware—Volumetric flasks, graduated cylinders, funnels and centrifuge tubes (glass and/or metal-free plastic).

6.10.2 Assorted calibrated pipettes.

6.10.3 Conical Phillips beakers (Corning 1080–250 or equivalent), 250 mL with 50 mm watch glasses.

6.10.4 Griffin beakers, 250 mL with 75 mm watch glasses and (optional) 75 mm ribbed watch glasses.

6.10.5 (Optional) PTFE and/or quartz Griffin beakers, 250 mL with PTFE covers.

6.10.6 Evaporating dishes or high-form crucibles, porcelain, 100 mL capacity.

6.10.7 Narrow-mouth storage bottles, FEP (fluorinated ethylene propylene) with screw closure, 125 mL to 1 L capacities.

6.10.8 One-piece stem FEP wash bottle with screw closure, 125 mL capacity.

7.0 Reagents and Standards

7.1 Reagents may contain elemental impurities which might affect analytical data. Only high-purity reagents that conform to the American Chemical Society specifications[13] should be used whenever possible. If the purity of a reagent is in question, analyze for contamination. All acids used for this method must be of ultra high-purity grade or equivalent. Suitable acids are available from a number of manufacturers. Redistilled acids prepared by sub-boiling distillation are acceptable.

7.2 Hydrochloric acid, concentrated (sp.gr. 1.19)—HCl.

7.2.1 Hydrochloric acid (1 + 1)—Add 500 mL concentrated HCl to 400 mL reagent water and dilute to 1 L.

7.2.2 Hydrochloric acid (1 + 4)—Add 200 mL concentrated HCl to 400 mL reagent water and dilute to 1 L.

7.2.3 Hydrochloric acid (1 + 20)—Add 10 mL concentrated HCl to 200 mL reagent water.

7.3 Nitric acid, concentrated (sp.gr. 1.41)—HNO_3.

7.3.1 Nitric acid (1 + 1)—Add 500 mL concentrated HNO_3 to 400 mL reagent water and dilute to 1 L.

7.3.2 Nitric acid (1 + 2)—Add 100 mL concentrated HNO_3 to 200 mL reagent water.

7.3.3 Nitric acid (1 + 5)—Add 50 mL concentrated HNO_3 to 250 mL reagent water.

7.3.4 Nitric acid (1 + 9)—Add 10 mL concentrated HNO_3 to 90 mL reagent water.

7.4 Reagent water. All references to water in this method refer to ASTM Type I grade water.[14]

7.5 Ammonium hydroxide, concentrated (sp.gr. 0.902).

7.6 Tartaric acid, ACS reagent grade.

7.7 Hydrogen peroxide, 50%, stabilized certified reagent grade.

7.8 Standard Stock Solutions—Stock standards may be purchased or prepared from ultra-high purity grade chemicals (99.99–99.999% pure). All compounds must be dried for one hour at 105 °C, unless otherwise specified. It is recommended that stock solutions be stored in FEP bottles. Replace stock standards when succeeding dilutions for preparation of calibration standards cannot be verified.

CAUTION: Many of these chemicals are extremely toxic if inhaled or swallowed (Section 5.1). Wash hands thoroughly after handling.

Typical stock solution preparation procedures follow for 1 L quantities, but for the purpose of pollution prevention, the analyst is encouraged to prepare smaller quantities when possible. Concentrations are calculated based upon the weight of the pure element or upon the weight of the compound multiplied by the fraction of the analyte in the compound

From pure element,

$$\text{Concentration} = \frac{\text{weight}(\text{mg})}{\text{volume}(\text{L})}$$

From pure compound,

$$\text{Concentration} = \frac{\text{weight}(\text{mg}) \times \text{gravimetric factor}}{\text{volume}(\text{L})}$$

where: gravimetric factor = the weight fraction of the analyte in the compound

7.8.1 Aluminum solution, stock, 1 mL = 1000 µg Al: Dissolve 1.000 g of aluminum metal, weighed accurately to at least four significant figures, in an acid mixture of 4.0 mL of (1 + 1) HCl and 1 mL of concentrated HNO_3 in a beaker. Warm beaker slowly to effect solution. When dissolution is complete, transfer solution quantitatively to a 1 L flask, add an additional 10.0 mL of (1 + 1) HCl and dilute to volume with reagent water.

7.8.2 Antimony solution, stock, 1 mL = 1000 µg Sb: Dissolve 1.000 g of antimony powder, weighed accurately to at least four significant figures, in 20.0 mL (1 + 1) HNO_3 and 10.0 mL concentrated HCl. Add 100 mL reagent water and 1.50 g tartaric acid. Warm solution slightly to effect complete dissolution. Cool solution and add reagent water to volume in a 1 L volumetric flask.

7.8.3 Arsenic solution, stock, 1 mL = 1000 µg As: Dissolve 1.320 g of As_2O_3 (As fraction = 0.7574), weighed accurately to at least four significant figures, in 100 mL of reagent water containing 10.0 mL concentrated NH_4OH. Warm the solution gently to effect dissolution. Acidify the solution with 20.0 mL concentrated HNO_3 and dilute to volume in a 1 L volumetric flask with reagent water.

7.8.4 Barium solution, stock, 1 mL = 1000 µg Ba: Dissolve 1.437 g $BaCO_3$ (Ba fraction = 0.6960), weighed accurately to at least four significant figures, in 150 mL (1 + 2) HNO_3 with heating and stirring to degas and dissolve compound. Let solution cool and dilute with reagent water in 1 L volumetric flask.

7.8.5 Beryllium solution, stock, 1 mL = 1000 µg Be: *DO NOT DRY*. Dissolve 19.66 g $BeSO_4 \bullet 4H_2O$ (Be fraction = 0.0509), weighed accurately to at least four significant figures, in reagent water, add 10.0 mL concentrated HNO_3, and dilute to volume in a 1 L volumetric flask with reagent water.

7.8.6 Boron solution, stock, 1 mL = 1000 µg B: *DO NOT DRY*. Dissolve 5.716 g anhydrous H_3BO_3 (B fraction = 0.1749), weighed accurately to at least four significant figures, in reagent water and dilute in a 1 L volumetric flask with reagent water. Transfer immediately after mixing to a clean FEP bottle to minimize any leaching of boron from the glass volumetric container. Use of a nonglass volumetric flask is recommended to avoid boron contamination from glassware.

7.8.7 Cadmium solution, stock, 1 mL = 1000 µg Cd: Dissolve 1.000 g Cd metal, acid cleaned with (1 + 9) HNO_3, weighed accurately to at least four significant figures, in 50 mL (1 + 1) HNO_3 with heating to effect dissolution. Let solution cool and dilute with reagent water in a 1 L volumetric flask.

7.8.8 Calcium solution, stock, 1 mL = 1000 µg Ca: Suspend 2.498 g $CaCO_3$ (Ca fraction = 0.4005), dried at 180 °C for one hour before weighing, weighed accurately to at least four significant figures, in reagent water and dissolve cautiously with a minimum amount of (1 + 1) HNO_3. Add 10.0 mL concentrated HNO_3 and dilute to volume in a 1 L volumetric flask with reagent water.

7.8.9 Cerium solution, stock, 1 mL = 1000 µg Ce: Slurry 1.228 g CeO_2 (Ce fraction = 0.8141), weighed accurately to at least four significant figures, in 100 mL concentrated HNO_3 and evaporate to dryness. Slurry the residue in 20 mL H_2O, add 50 mL concentrated HNO_3, with heat and stirring add 60 mL 50% H_2O_2 dropwise in 1 mL increments allowing periods of stirring between the 1 mL additions. Boil off excess H_2O_2 before diluting to volume in a 1 L volumetric flask with reagent water.

7.8.10 Chromium solution, stock, 1 mL = 1000 µg Cr: Dissolve 1.923 g CrO_3 (Cr fraction = 0.5200), weighed accurately to at least four significant figures, in 120 mL (1 + 5) HNO_3. When solution is complete, dilute to volume in a 1 L volumetric flask with reagent water.

7.8.11 Cobalt solution, stock, 1 mL = 1000 µg Co: Dissolve 1.000 g Co metal, acid cleaned with (1 + 9) HNO_3, weighed accurately to at least four significant figures, in 50.0 mL (1 + 1) HNO_3. Let solution cool and dilute to volume in a 1 L volumetric flask with reagent water.

7.8.12 Copper solution, stock, 1 mL = 1000 µg Cu: Dissolve 1.000 g Cu metal, acid cleaned with (1 + 9) HNO_3, weighed accurately to at least four significant figures, in 50.0 mL (1 + 1) HNO_3 with heating to effect dissolution. Let solution cool and dilute in a 1 L volumetric flask with reagent water.

7.8.13 Iron solution, stock, 1 mL = 1000 µg Fe: Dissolve 1.000 g Fe metal, acid cleaned

with (1 + 1) HCl, weighed accurately to four significant figures, in 100 mL (1 + 1) HCl with heating to effect dissolution. Let solution cool and dilute with reagent water in a 1 L volumetric flask.

7.8.14 Lead solution, stock, 1 mL = 1000 µg Pb: Dissolve 1.599 g $Pb(NO_3)_2$ (Pb fraction = 0.6256), weighed accurately to at least four significant figures, in a minimum amount of (1 + 1) HNO_3. Add 20.0 mL (1 + 1) HNO_3 and dilute to volume in a 1 L volumetric flask with reagent water.

7.8.15 Lithium solution, stock, 1 mL = 1000 µg Li: Dissolve 5.324 g Li_2CO_3 (Li fraction = 0.1878), weighed accurately to at least four significant figures, in a minimum amount of (1 + 1) HCl and dilute to volume in a 1 L volumetric flask with reagent water.

7.8.16 Magnesium solution, stock, 1 mL = 1000 µg Mg: Dissolve 1.000 g cleanly polished Mg ribbon, accurately weighed to at least four significant figures, in slowly added 5.0 mL (1 + 1) HCl (CAUTION: reaction is vigorous). Add 20.0 mL (1 + 1) HNO_3 and dilute to volume in a 1 L volumetric flask with reagent water.

7.8.17 Manganese solution, stock, 1 mL = 1000 µg Mn: Dissolve 1.000 g of manganese metal, weighed accurately to at least four significant figures, in 50 mL (1 + 1) HNO_3 and dilute to volume in a 1 L volumetric flask with reagent water.

7.8.18 Mercury solution, stock, 1 mL = 1000 µg Hg: *DO NOT DRY*. CAUTION: highly toxic element. Dissolve 1.354 g $HgCl_2$ (Hg fraction = 0.7388) in reagent water. Add 50.0 mL concentrated HNO_3 and dilute to volume in 1 L volumetric flask with reagent water.

7.8.19 Molybdenum solution, stock, 1 mL = 1000 µg Mo: Dissolve 1.500 g MoO_3 (Mo fraction = 0.6666), weighed accurately to at least four significant figures, in a mixture of 100 mL reagent water and 10.0 mL concentrated NH_4OH, heating to effect dissolution. Let solution cool and dilute with reagent water in a 1 L volumetric flask.

7.8.20 Nickel solution, stock, 1 mL = 1000 µg Ni: Dissolve 1.000 g of nickel metal, weighed accurately to at least four significant figures, in 20.0 mL hot concentrated HNO_3, cool, and dilute to volume in a 1 L volumetric flask with reagent water.

7.8.21 Phosphorus solution, stock, 1 mL = 1000 µg P: Dissolve 3.745 g $NH_4H_2PO_4$ (P fraction = 0.2696), weighed accurately to at least four significant figures, in 200 mL reagent water and dilute to volume in a 1 L volumetric flask with reagent water.

7.8.22 Potassium solution, stock, 1 mL = 1000 µg K: Dissolve 1.907 g KCl (K fraction = 0.5244) dried at 110 °C, weighed accurately to at least four significant figures, in reagent water, add 20 mL (1 + 1) HCl and dilute to volume in a 1 L volumetric flask with reagent water.

7.8.23 Selenium solution, stock, 1 mL = 1000 µg Se: Dissolve 1.405 g SeO_2 (Se fraction = 0.7116), weighed accurately to at least four significant figures, in 200 mL reagent water and dilute to volume in a 1 L volumetric flask with reagent water.

7.8.24 Silica solution, stock, 1 mL = 1000 µg SiO_2: *DO NOT DRY*. Dissolve 2.964 g $(NH_4)_2SiF_6$, weighed accurately to at least four significant figures, in 200 mL (1 + 20) HCl with heating at 85 °C to effect dissolution. Let solution cool and dilute to volume in a 1 L volumetric flask with reagent water.

7.8.25 Silver solution, stock, 1 mL = 1000 µg Ag: Dissolve 1.000 g Ag metal, weighed accurately to at least four significant figures, in 80 mL (1 + 1) HNO_3 with heating to effect dissolution. Let solution cool and dilute with reagent water in a 1 L volumetric flask. Store solution in amber bottle or wrap bottle completely with aluminum foil to protect solution from light.

7.8.26 Sodium solution, stock, 1 mL = 1000 µg Na: Dissolve 2.542 g NaCl (Na fraction = 0.3934), weighed accurately to at least four significant figures, in reagent water. Add 10.0 mL concentrated HNO_3 and dilute to volume in a 1 L volumetric flask with reagent water.

7.8.27 Strontium solution, stock, 1 mL = 1000 µg Sr: Dissolve 1.685 g $SrCO_3$ (Sr fraction = 0.5935), weighed accurately to at least four significant figures, in 200 mL reagent water with dropwise addition of 100 mL (1 + 1) HCl. Dilute to volume in a 1 L volumetric flask with reagent water.

7.8.28 Thallium solution, stock, 1 mL = 1000 µg Tl: Dissolve 1.303 g $TlNO_3$ (Tl fraction = 0.7672), weighed accurately to at least four significant figures, in reagent water. Add 10.0 mL concentrated HNO_3 and dilute to volume in a 1 L volumetric flask with reagent water.

7.8.29 Tin solution, stock, 1 mL = 1000 µg Sn: Dissolve 1.000 g Sn shot, weighed accurately to at least four significant figures, in an acid mixture of 10.0 mL concentrated HCl and 2.0 mL (1 + 1) HNO_3 with heating to effect dissolution. Let solution cool, add 200 mL concentrated HCl, and dilute to volume in a 1 L volumetric flask with reagent water.

7.8.30 Titanium solution, stock, 1 mL = 1000 µg Ti: *DO NOT DRY*. Dissolve 6.138 g $(NH_4)_2TiO(C_2O_4)_2 \bullet H_2O$ (Ti fraction = 0.1629), weighed accurately to at least four significant figures, in 100 mL reagent water. Dilute to volume in a 1 L volumetric flask with reagent water.

7.8.31 Vanadium solution, stock, 1 mL = 1000 µg V: Dissolve 1.000 g V metal, acid cleaned with (1 + 9) HNO_3, weighed accurately to at least four significant figures, in 50 mL (1 + 1) HNO_3 with heating to effect dissolution. Let solution cool and dilute with reagent water to volume in a 1 L volumetric flask.

7.8.32 Yttrium solution, stock 1 mL = 1000 µg Y: Dissolve 1.270 g Y_2O_3 (Y fraction = 0.7875), weighed accurately to at least four significant figures, in 50 mL (1 + 1) HNO_3, heating to effect dissolution. Cool and dilute

to volume in a 1 L volumetric flask with reagent water.

7.8.33 Zinc solution, stock, 1 mL = 1000 µg Zn: Dissolve 1.000 g Zn metal, acid cleaned with (1 + 9) HNO_3, weighed accurately to at least four significant figures, in 50 mL (1 + 1) HNO_3 with heating to effect dissolution. Let solution cool and dilute with reagent water to volume in a 1 L volumetric flask.

7.9 Mixed Calibration Standard Solutions—For the analysis of total recoverable digested samples prepare mixed calibration standard solutions (see Table 3) by combining appropriate volumes of the stock solutions in 500 mL volumetric flasks containing 20 mL (1 + 1) HNO_3 and 20 mL (1 + 1) HCl and dilute to volume with reagent water. Prior to preparing the mixed standards, each stock solution should be analyzed separately to determine possible spectral interferences or the presence of impurities. Care should be taken when preparing the mixed standards to ensure that the elements are compatible and stable together. To minimize the opportunity for contamination by the containers, it is recommended to transfer the mixed-standard solutions to acid-cleaned, never-used FEP fluorocarbon (FEP) bottles for storage. Fresh mixed standards should be prepared, as needed, with the realization that concentrations can change on aging. Calibration standards not prepared from primary standards must be initially verified using a certified reference solution. For the recommended wavelengths listed in Table 1 some typical calibration standard combinations are given in Table 3.

Note: If the addition of silver to the recommended mixed-acid calibration standard results in an initial precipitation, add 15 mL of reagent water and warm the flask until the solution clears. For this acid combination, the silver concentration should be limited to 0.5 mg/L.

7.10 Blanks—Four types of blanks are required for the analysis. The calibration blank is used in establishing the analytical curve, the laboratory reagent blank is used to assess possible contamination from the sample preparation procedure, the laboratory fortified blank is used to assess routine laboratory performance and a rinse blank is used to flush the instrument uptake system and nebulizer between standards, check solutions, and samples to reduce memory interferences.

7.10.1 The calibration blank for aqueous samples and extracts is prepared by acidifying reagent water to the same concentrations of the acids as used for the standards. The calibration blank should be stored in a FEP bottle.

7.10.2 The laboratory reagent blank (LRB) must contain all the reagents in the same volumes as used in the processing of the samples. The LRB must be carried through the same entire preparation scheme as the samples including sample digestion, when applicable.

7.10.3 The laboratory fortified blank (LFB) is prepared by fortifying an aliquot of the laboratory reagent blank with all analytes to a suitable concentration using the following recommended criteria: Ag 0.1 mg/L, K 5.0 mg/L and all other analytes 0.2 mg/L or a concentration approximately 100 times their respective MDL, whichever is greater. The LFB must be carried through the same entire preparation scheme as the samples including sample digestion, when applicable.

7.10.4 The rinse blank is prepared by acidifying reagent water to the same concentrations of acids as used in the calibration blank and stored in a convenient manner.

7.11 Instrument Performance Check (IPC) Solution—The IPC solution is used to periodically verify instrument performance during analysis. It should be prepared in the same acid mixture as the calibration standards by combining method analytes at appropriate concentrations. Silver must be limited to <0.5 mg/L; while potassium and phosphorus because of higher MDLs and silica because of potential contamination should be at concentrations of 10 mg/L. For other analytes a concentration of 2 mg/L is recommended. The IPC solution should be prepared from the same standard stock solutions used to prepare the calibration standards and stored in an FEP bottle. Agency programs may specify or request that additional instrument performance check solutions be prepared at specified concentrations in order to meet particular program needs.

7.12 Quality Control Sample (QCS)—Analysis of a QCS is required for initial and periodic verification of calibration standards or stock standard solutions in order to verify instrument performance. The QCS must be obtained from an outside source different from the standard stock solutions and prepared in the same acid mixture as the calibration standards. The concentration of the analytes in the QCS solution should be 1 mg/L, except silver, which must be limited to a concentration of 0.5 mg/L for solution stability. The QCS solution should be stored in a FEP bottle and analyzed as needed to meet data-quality needs. A fresh solution should be prepared quarterly or more frequently as needed.

7.13 Spectral Interference Check (SIC) Solutions—When interelement corrections are applied, SIC solutions are needed containing concentrations of the interfering elements at levels that will provide an adequate test of the correction factors.

7.13.1 SIC solutions containing (a) 300 mg/L Fe; (b) 200 mg/L AL; (c) 50 mg/L Ba; (d) 50 mg/L Be; (e) 50 mg/L Cd; (f) 50 mg/L Ce; (g) 50 mg/L Co; (h) 50 mg/L Cr; (i) 50 mg/L Cu; (j) 50

mg/L Mn; (k) 50 mg/L Mo; (l) 50 mg/L Ni; (m) 50 mg/L Sn; (n) 50 mg/L SiO_2; (o) 50 mg/L Ti; (p) 50 mg/L Tl and (q) 50 mg/L V should be prepared in the same acid mixture as the calibration standards and stored in FEP bottles. These solutions can be used to periodically verify a partial list of the on-line (and possible off-line) interelement spectral correction factors for the recommended wavelengths given in Table 1. Other solutions could achieve the same objective as well. (Multielement SIC solutions[3] may be prepared and substituted for the single element solutions provided an analyte is not subject to interference from more than one interferant in the solution.)

Note: If wavelengths other than those recommended in Table 1 are used, other solutions different from those above (a through q) may be required.

7.13.2 For interferences from iron and aluminum, only those correction factors (positive or negative) when multiplied by 100 to calculate apparent analyte concentrations that exceed the determined analyte IDL or fall below the lower 3-sigma control limit of the calibration blank need be tested on a daily basis.

7.13.3 For the other interfering elements, only those correction factors (positive or negative) when multiplied by 10 to calculate apparent analyte concentrations that exceed the determined analyte IDL or fall below the lower 3-sigma control limit of the calibration blank need be tested on a daily basis.

7.13.4 If the correction routine is operating properly, the determined apparent analyte(s) concentration from analysis of each interference solution (a through q) should fall within a specific concentration range bracketing the calibration blank. This concentration range is calculated by multiplying the concentration of the interfering element by the value of the correction factor being tested and dividing by 10. If after subtraction of the calibration blank the apparent analyte concentration is outside (above or below) this range, a change in the correction factor of more than 10% should be suspected. The cause of the change should be determined and corrected and the correction factor should be updated.

Note: The SIC solution should be analyzed more than once to confirm a change has occurred with adequate rinse time between solutions and before subsequent analysis of the calibration blank.

7.13.5 If the correction factors tested on a daily basis are found to be within the 10% criteria for five consecutive days, the required verification frequency of those factors in compliance may be extended to a weekly basis. Also, if the nature of the samples analyzed is such (e.g., finished drinking water) that they do not contain concentrations of the interfering elements at the 10 mg/L level, daily verification is not required; however, all interelement spectral correction factors must be verified annually and updated, if necessary.

7.13.6 If the instrument does not display negative concentration values, fortify the SIC solutions with the elements of interest at 1 mg/L and test for analyte recoveries that are below 95%. In the absence of measurable analyte, over-correction could go undetected because a negative value could be reported as zero.

7.14 For instruments without interelement correction capability or when interelement corrections are not used, SIC solutions (containing similar concentrations of the major components in the samples, e.g., 10 mg/L) can serve to verify the absence of effects at the wavelengths selected. These data must be kept on file with the sample analysis data. If the SIC solution confirms an operative interference that is 10% of the analyte concentration, the analyte must be determined using a wavelength and background correction location free of the interference or by another approved test procedure. Users are advised that high salt concentrations can cause analyte signal suppressions and confuse interference tests.

7.15 Plasma Solution—The plasma solution is used for determining the optimum viewing height of the plasma above the work coil prior to using the method (Section 10.2). The solution is prepared by adding a 5 mL aliquot from each of the stock standard solutions of arsenic, lead, selenium, and thallium to a mixture of 20 mL (1 + 1) nitric acid and 20 mL (1 + 1) hydrochloric acid and diluting to 500 mL with reagent water. Store in a FEP bottle.

8.0 Sample Collection, Preservation, and Storage

8.1 Prior to the collection of an aqueous sample, consideration should be given to the type of data required, (*i.e.*, dissolved or total recoverable), so that appropriate preservation and pretreatment steps can be taken. The pH of all aqueous samples must be tested immediately prior to aliquoting for processing or ''direct analysis'' to ensure the sample has been properly preserved. If properly acid preserved, the sample can be held up to six months before analysis.

8.2 For the determination of the dissolved elements, the sample must be filtered through a 0.45 μm pore diameter membrane filter at the time of collection or as soon thereafter as practically possible. (Glass or plastic filtering apparatus are recommended to avoid possible contamination. Only plastic apparatus should be used when the determinations of boron and silica are critical.) Use a portion of the filtered sample to rinse the filter flask, discard this portion and collect the required volume of filtrate. Acidify

the filtrate with (1 + 1) nitric acid immediately following filtration to pH <2.

8.3 For the determination of total recoverable elements in aqueous samples, samples are not filtered, but acidified with (1 + 1) nitric acid to pH <2 (normally, 3 mL of (1 + 1) acid per liter of sample is sufficient for most ambient and drinking water samples). Preservation may be done at the time of collection, however, to avoid the hazards of strong acids in the field, transport restrictions, and possible contamination it is recommended that the samples be returned to the laboratory within two weeks of collection and acid preserved upon receipt in the laboratory. Following acidification, the sample should be mixed, held for 16 hours, and then verified to be pH <2 just prior withdrawing an aliquot for processing or ''direct analysis''. If for some reason such as high alkalinity the sample pH is verified to be >2, more acid must be added and the sample held for 16 hours until verified to be pH <2. See Section 8.1.

Note: When the nature of the sample is either unknown or is known to be hazardous, acidification should be done in a fume hood. See Section 5.2.

8.4 Solid samples require no preservation prior to analysis other than storage at 4 °C. There is no established holding time limitation for solid samples.

8.5 For aqueous samples, a field blank should be prepared and analyzed as required by the data user. Use the same container and acid as used in sample collection.

9.0 Quality Control

9.1 Each laboratory using this method is required to operate a formal quality control (QC) program. The minimum requirements of this program consist of an initial demonstration of laboratory capability, and the periodic analysis of laboratory reagent blanks, fortified blanks and other laboratory solutions as a continuing check on performance. The laboratory is required to maintain performance records that define the quality of the data thus generated.

9.2 Initial Demonstration of Performance (mandatory).

9.2.1 The initial demonstration of performance is used to characterize instrument performance (determination of linear dynamic ranges and analysis of quality control samples) and laboratory performance (determination of method detection limits) prior to analyses conducted by this method.

9.2.2 Linear dynamic range (LDR)—The upper limit of the LDR must be established for each wavelength utilized. It must be determined from a linear calibration prepared in the normal manner using the established analytical operating procedure for the instrument. The LDR should be determined by analyzing succeedingly higher standard concentrations of the analyte until the observed analyte concentration is no more than 10% below the stated concentration of the standard. Determined LDRs must be documented and kept on file. The LDR which may be used for the analysis of samples should be judged by the analyst from the resulting data. Determined sample analyte concentrations that are greater than 90% of the determined upper LDR limit must be diluted and reanalyzed. The LDRs should be verified annually or whenever, in the judgment of the analyst, a change in analytical performance caused by either a change in instrument hardware or operating conditions would dictate they be redetermined.

9.2.3 Quality control sample (QCS)—When beginning the use of this method, on a quarterly basis, after the preparation of stock or calibration standard solutions or as required to meet data-quality needs, verify the calibration standards and acceptable instrument performance with the preparation and analyses of a QCS (Section 7.12). To verify the calibration standards the determined mean concentrations from three analyses of the QCS must be within 5% of the stated values. If the calibration standard cannot be verified, performance of the determinative step of the method is unacceptable. The source of the problem must be identified and corrected before either proceeding on with the initial determination of method detection limits or continuing with on-going analyses.

9.2.4 Method detection limit (MDL)—MDLs must be established for all wavelengths utilized, using reagent water (blank) fortified at a concentration of two to three times the estimated instrument detection limit.[15] To determine MDL values, take seven replicate aliquots of the fortified reagent water and process through the entire analytical method. Perform all calculations defined in the method and report the concentration values in the appropriate units. Calculate the MDL as follows:

$$MDL = (t) \times (S)$$

where:

t = students' t value for a 99% confidence level and a standard deviation estimate with n-1 degrees of freedom [t = 3.14 for seven replicates]

S = standard deviation of the replicate analyses

Note: If additional confirmation is desired, reanalyze the seven replicate aliquots on two more nonconsecutive days and again calculate the MDL values for each day. An average of the three MDL values for each analyte may provide for a more appropriate MDL estimate. If the relative standard deviation (RSD) from the analyses of the seven aliquots is <10%, the concentration used to determine the analyte MDL may have been inappropriately high for the determination. If so, this could result in the calculation of

an unrealistically low MDL. Concurrently, determination of MDL in reagent water represents a best case situation and does not reflect possible matrix effects of real world samples. However, successful analyses of LFMs (Section 9.4) and the analyte addition test described in Section 9.5.1 can give confidence to the MDL value determined in reagent water. Typical single laboratory MDL values using this method are given in Table 4.

The MDLs must be sufficient to detect analytes at the required levels according to compliance monitoring regulation (Section 1.2). MDLs should be determined annually, when a new operator begins work or whenever, in the judgment of the analyst, a change in analytical performance caused by either a change in instrument hardware or operating conditions would dictate they be redetermined.

9.3 Assessing Laboratory Performance (mandatory)

9.3.1 Laboratory reagent blank (LRB)—The laboratory must analyze at least one LRB (Section 7.10.2) with each batch of 20 or fewer samples of the same matrix. LRB data are used to assess contamination from the laboratory environment. LRB values that exceed the MDL indicate laboratory or reagent contamination should be suspected. When LRB values constitute 10% or more of the analyte level determined for a sample or is 2.2 times the analyte MDL whichever is greater, fresh aliquots of the samples must be prepared and analyzed again for the affected analytes after the source of contamination has been corrected and acceptable LRB values have been obtained.

9.3.2 Laboratory fortified blank (LFB)—The laboratory must analyze at least one LFB (Section 7.10.3) with each batch of samples. Calculate accuracy as percent recovery using the following equation:

$$R = \frac{LFB - LRB}{s} \times 100$$

where:

R = percent recovery

LFB = laboratory fortified blank

LRB = laboratory reagent blank

s = concentration equivalent of analyte added to fortify the LBR solution

If the recovery of any analyte falls outside the required control limits of 85–115%, that analyte is judged out of control, and the source of the problem should be identified and resolved before continuing analyses.

9.3.3 The laboratory must use LFB analyses data to assess laboratory performance against the required control limits of 85–115% (Section 9.3.2). When sufficient internal performance data become available (usually a minimum of 20–30 analyses), optional control limits can be developed from the mean percent recovery (x) and the standard deviation (S) of the mean percent recovery. These data can be used to establish the upper and lower control limits as follows:

UPPER CONTROL LIMIT = x + 3S

LOWER CONTROL LIMIT = x − 3S

The optional control limits must be equal to or better than the required control limits of 85–115%. After each five to 10 new recovery measurements, new control limits can be calculated using only the most recent 20–30 data points. Also, the standard deviation (S) data should be used to establish an on-going precision statement for the level of concentrations included in the LFB. These data must be kept on file and be available for review.

9.3.4 Instrument performance check (IPC) solution—For all determinations the laboratory must analyze the IPC solution (Section 7.11) and a calibration blank immediately following daily calibration, after every 10th sample (or more frequently, if required) and at the end of the sample run. Analysis of the calibration blank should always be <the analyte IDL, but greater than the lower 3-sigma control limit of the calibration blank. Analysis of the IPC solution immediately following calibration must verify that the instrument is within 5% of calibration with a relative standard deviation <3% from replicate integrations 4. Subsequent analyses of the IPC solution must be within 10% of calibration. If the calibration cannot be verified within the specified limits, reanalyze either or both the IPC solution and the calibration blank. If the second analysis of the IPC solution or the calibration blank confirm calibration to be outside the limits, sample analysis must be discontinued, the cause determined, corrected and/or the instrument recalibrated. All samples following the last acceptable IPC solution must be reanalyzed. The analysis data of the calibration blank and IPC solution must be kept on file with the sample analyses data.

9.3.5 Spectral interference check (SIC) solution—For all determinations the laboratory must periodically verify the interelement spectral interference correction routine by analyzing SIC solutions. The preparation and required periodic analysis of SIC solutions and test criteria for verifying the interelement interference correction routine are given in Section 7.13. Special cases where on-going verification is required are described in Section 7.14.

9.4 Assessing Analyte Recovery and Data Quality.

9.4.1 Sample homogeneity and the chemical nature of the sample matrix can affect analyte recovery and the quality of the data. Taking separate aliquots from the sample for replicate and fortified analyses can in some cases assess the effect. Unless otherwise specified by the data user, laboratory or program, the following laboratory fortified matrix (LFM) procedure (Section 9.4.2) is required. Also, other tests such as the analyte addition test (Section 9.5.1) and sample dilution test (Section 9.5.2) can indicate if matrix effects are operative.

9.4.2 The laboratory must add a known amount of each analyte to a minimum of 10% of the routine samples. In each case the LFM aliquot must be a duplicate of the aliquot used for sample analysis and for total recoverable determinations added prior to sample preparation. For water samples, the added analyte concentration must be the same as that used in the laboratory fortified blank (Section 7.10.3). For solid samples, however, the concentration added should be expressed as mg/kg and is calculated for a one gram aliquot by multiplying the added analyte concentration (mg/L) in solution by the conversion factor 100 (mg/L × 0.1L/0.001kg = 100, Section 12.5). (For notes on Ag, Ba, and Sn see Sections 1.7 and 1.8.) Over time, samples from all routine sample sources should be fortified.

Note: The concentration of calcium, magnesium, sodium and strontium in environmental waters, along with iron and aluminum in solids can vary greatly and are not necessarily predictable. Fortifying these analytes in routine samples at the same concentration used for the LFB may prove to be of little use in assessing data quality for these analytes. For these analytes sample dilution and reanalysis using the criteria given in Section 9.5.2 is recommended. Also, if specified by the data user, laboratory or program, samples can be fortified at higher concentrations, but even major constituents should be limited to <25 mg/L so as not to alter the sample matrix and affect the analysis.

9.4.3 Calculate the percent recovery for each analyte, corrected for background concentrations measured in the unfortified sample, and compare these values to the designated LFM recovery range of 70–130% or a 3-sigma recovery range calculated from the regression equations given in Table 9.[16] Recovery calculations are not required if the concentration added is less than 30% of the sample background concentration. Percent recovery may be calculated in units appropriate to the matrix, using the following equation:

$$R = \frac{C_s - C}{s} \times 100$$

where:

R = percent recovery
C_s = fortified sample concentration
C = sample background concentration
s = concentration equivalent of analyte added to fortify the sample

9.4.4 If the recovery of any analyte falls outside the designated LFM recovery range, and the laboratory performance for that analyte is shown to be in control (Section 9.3), the recovery problem encountered with the fortified sample is judged to be matrix related, not system related. The data user should be informed that the result for that analyte in the unfortified sample is suspect due to either the heterogeneous nature of the sample or matrix effects and analysis by method of standard addition or the use of an internal standard(s) (Section 11.5) should be considered.

9.4.5 Where reference materials are available, they should be analyzed to provide additional performance data. The analysis of reference samples is a valuable tool for demonstrating the ability to perform the method acceptably. Reference materials containing high concentrations of analytes can provide additional information on the performance of the spectral interference correction routine.

9.5 Assess the possible need for the method of standard additions (MSA) or internal standard elements by the following tests. Directions for using MSA or internal standard(s) are given in Section 11.5.

9.5.1 Analyte addition test: An analyte(s) standard added to a portion of a prepared sample, or its dilution, should be recovered to within 85% to 115% of the known value. The analyte(s) addition should produce a

minimum level of 20 times and a maximum of 100 times the method detection limit. If the analyte addition is <20% of the sample analyte concentration, the following dilution test should be used. If recovery of the analyte(s) is not within the specified limits, a matrix effect should be suspected, and the associated data flagged accordingly. The method of additions or the use of an appropriate internal standard element may provide more accurate data.

9.5.2 Dilution test: If the analyte concentration is sufficiently high (minimally, a factor of 50 above the instrument detection limit in the original solution but <90% of the linear limit), an analysis of a 1 + 4 dilution should agree (after correction for the fivefold dilution) within 10% of the original determination. If not, a chemical or physical interference effect should be suspected and the associated data flagged accordingly. The method of standard additions or the use of an internal-standard element may provide more accurate data for samples failing this test.

10.0 Calibration and Standardization

10.1 Specific wavelengths are listed in Table 1. Other wavelengths may be substituted if they can provide the needed sensitivity and are corrected for spectral interference. However, because of the difference among various makes and models of spectrometers, specific instrument operating conditions cannot be given. The instrument and operating conditions utilized for determination must be capable of providing data of acceptable quality to the program and data user. The analyst should follow the instructions provided by the instrument manufacturer unless other conditions provide similar or better performance for a task. Operating conditions for aqueous solutions usually vary from 1100–1200 watts forward power, 15–16 mm viewing height, 15–19 L/min. argon coolant flow, 0.6–1 L/min. argon aerosol flow, 1–1.8 mL/min. sample pumping rate with a one minute preflush time and measurement time near 1 s per wavelength peak (for sequential instruments) and near 10 s per sample (for simultaneous instruments). Use of the Cu/Mn intensity ratio at 324.754 nm and 257.610 nm (by adjusting the argon aerosol flow) has been recommended as a way to achieve repeatable interference correction factors.[17]

10.2 Prior to using this method optimize the plasma operating conditions. The following procedure is recommended for vertically configured plasmas. The purpose of plasma optimization is to provide a maximum signal-to-background ratio for the least sensitive element in the analytical array. The use of a mass flow controller to regulate the nebulizer gas flow rate greatly facilitates the procedure.

10.2.1 Ignite the plasma and select an appropriate incident rf power with minimum reflected power. Allow the instrument to become thermally stable before beginning. This usually requires at least 30 to 60 minutes of operation. While aspirating the 1000 µg/mL solution of yttrium (Section 7.8.32), follow the instrument manufacturer's instructions and adjust the aerosol carrier gas flow rate through the nebulizer so a definitive blue emission region of the plasma extends approximately from 5–20 mm above the top of the work coil.[18] Record the nebulizer gas flow rate or pressure setting for future reference.

10.2.2 After establishing the nebulizer gas flow rate, determine the solution uptake rate of the nebulizer in mL/min. by aspirating a known volume calibration blank for a period of at least three minutes. Divide the spent volume by the aspiration time (in minutes) and record the uptake rate. Set the peristaltic pump to deliver the uptake rate in a steady even flow.

10.2.3 After horizontally aligning the plasma and/or optically profiling the spectrometer, use the selected instrument conditions from Sections 10.2.1 and 10.2.2, and aspirate the plasma solution (Section 7.15), containing 10 µg/mL each of As, Pb, Se and Tl. Collect intensity data at the wavelength peak for each analyte at 1 mm intervals from 14–18 mm above the top of the work coil. (This region of the plasma is commonly referred to as the analytical zone.)[19] Repeat the process using the calibration blank. Determine the net signal to blank intensity ratio for each analyte for each viewing height setting. Choose the height for viewing the plasma that provides the largest intensity ratio for the least sensitive element of the four analytes. If more than one position provides the same ratio, select the position that provides the highest net intensity counts for the least sensitive element or accept a compromise position of the intensity ratios of all four analytes.

10.2.4 The instrument operating condition finally selected as being optimum should provide the lowest reliable instrument detection limits and method detection limits. Refer to Tables 1 and 4 for comparison of IDLs and MDLs, respectively.

10.2.5 If either the instrument operating conditions, such as incident power and/or nebulizer gas flow rate are changed, or a new torch injector tube having a different orifice i.d. is installed, the plasma and plasma viewing height should be reoptimized.

10.2.6 Before daily calibration and after the instrument warmup period, the nebulizer gas flow must be reset to the determined optimized flow. If a mass flow controller is being used, it should be reset to the recorded optimized flow rate. In order to maintain valid spectral interelement correction routines the nebulizer gas flow rate should be

the same from day-to-day (<2% change). The change in signal intensity with a change in nebulizer gas flow rate for both ''hard'' (Pb 220.353 nm) and ''soft'' (Cu 324.754) lines is illustrated in Figure 1.

10.3 Before using the procedure (Section 11.0) to analyze samples, there must be data available documenting initial demonstration of performance. The required data and procedure is described in Section 9.2. This data must be generated using the same instrument operating conditions and calibration routine (Section 11.4) to be used for sample analysis. These documented data must be kept on file and be available for review by the data user.

10.4 After completing the initial demonstration of performance, but before analyzing samples, the laboratory must establish and initially verify an interelement spectral interference correction routine to be used during sample analysis. A general description concerning spectral interference and the analytical requirements for background correction and for correction of interelement spectral interference in particular are given in Section 4.1. To determine the appropriate location for background correction and to establish the interelement interference correction routine, repeated spectral scan about the analyte wavelength and repeated analyses of the single element solutions may be required. Criteria for determining an interelement spectral interference is an apparent positive or negative concentration on the analyte that is outside the 3-sigma control limits of the calibration blank for the analyte. (The upper-control limit is the analyte IDL.) Once established, the entire routine must be initially and periodically verified annually, or whenever there is a change in instrument operating conditions (Section 10.2.5). Only a portion of the correction routine must be verified more frequently or on a daily basis. Test criteria and required solutions are described in Section 7.13. Initial and periodic verification data of the routine should be kept on file. Special cases where on-going verification are required is described in Section 7.14.

11.0 Procedure

11.1 Aqueous Sample Preparation—Dissolved Analytes

11.1.1 For the determination of dissolved analytes in ground and surface waters, pipet an aliquot (20 mL) of the filtered, acid preserved sample into a 50 mL polypropylene centrifuge tube. Add an appropriate volume of (1 + 1) nitric acid to adjust the acid concentration of the aliquot to approximate a 1% (v/v) nitric acid solution (e.g., add 0.4 mL (1 + 1) HNO_3 to a 20 mL aliquot of sample). Cap the tube and mix. The sample is now ready for analysis (Section 1.3). Allowance for sample dilution should be made in the calculations. (If mercury is to be determined, a separate aliquot must be additionally acidified to contain 1% (v/v) HCl to match the signal response of mercury in the calibration standard and reduce memory interference effects. Section 1.9).

NOTE: If a precipitate is formed during acidification, transport, or storage, the sample aliquot must be treated using the procedure described in Sections 11.2.2 through 11.2.7 prior to analysis.

11.2 Aqueous Sample Preparation—Total Recoverable Analytes

11.2.1 For the ''direct analysis'' of total recoverable analytes in drinking water samples containing turbidity <1 NTU, treat an unfiltered acid preserved sample aliquot using the sample preparation procedure described in Section 11.1.1 while making allowance for sample dilution in the data calculation (Section 1.2). For the determination of total recoverable analytes in all other aqueous samples or for preconcentrating drinking water samples prior to analysis follow the procedure given in Sections 11.2.2 through 11.2.7.

11.2.2 For the determination of total recoverable analytes in aqueous samples (other than drinking water with <1 NTU turbidity), transfer a 100 mL (1 mL) aliquot from a well mixed, acid preserved sample to a 250 mL Griffin beaker (Sections 1.2, 1.3, 1.6, 1.7, 1.8, and 1.9). (When necessary, smaller sample aliquot volumes may be used.)

NOTE: If the sample contains *undissolved* solids >1%, a well mixed, acid preserved aliquot containing no more than 1 g particulate material should be cautiously evaporated to near 10 mL and extracted using the acid-mixture procedure described in Sections 11.3.3 through 11.3.6.

11.2.3 Add 2 mL (1 + 1) nitric acid and 1.0 mL of (1 + 1) hydrochloric acid to the beaker containing the measured volume of sample. Place the beaker on the hot plate for solution evaporation. The hot plate should be located in a fume hood and previously adjusted to provide evaporation at a temperature of approximately but no higher than 85 °C. (See the following note.) The beaker should be covered with an elevated watch glass or other necessary steps should be taken to prevent sample contamination from the fume hood environment.

NOTE: For proper heating adjust the temperature control of the hot plate such that an uncovered Griffin beaker containing 50 mL of water placed in the center of the hot plate can be maintained at a temperature approximately but no higher than 85 °C. (Once the beaker is covered with a watch glass the temperature of the water will rise to approximately 95 °C.)

11.2.4 Reduce the volume of the sample aliquot to about 20 mL by gentle heating at 85 °C. *DO NOT BOIL*. This step takes about two hours for a 100 mL aliquot with the rate of evaporation rapidly increasing as the sample volume approaches 20 mL. (A spare beaker containing 20 mL of water can be used as a gauge.)

11.2.5 Cover the lip of the beaker with a watch glass to reduce additional evaporation and gently reflux the sample for 30 minutes. (Slight boiling may occur, but vigorous boiling must be avoided to prevent loss of the HCl-H_2O azeotrope.)

11.2.6 Allow the beaker to cool. Quantitatively transfer the sample solution to a 50 mL volumetric flask, make to volume with reagent water, stopper and mix.

11.2.7 Allow any undissolved material to settle overnight, or centrifuge a portion of the prepared sample until clear. (If after centrifuging or standing overnight the sample contains suspended solids that would clog the nebulizer, a portion of the sample may be filtered for their removal prior to analysis. However, care should be exercised to avoid potential contamination from filtration.) The sample is now ready for analysis. Because the effects of various matrices on the stability of diluted samples cannot be characterized, all analyses should be performed as soon as possible after the completed preparation.

11.3 Solid Sample Preparation—Total Recoverable Analytes

11.3.1 For the determination of total recoverable analytes in solid samples, mix the sample thoroughly and transfer a portion (>20 g) to tared weighing dish, weigh the sample and record the wet weight (WW). (For samples with <35% moisture a 20 g portion is sufficient. For samples with moisture >35% a larger aliquot 50–100 g is required.) Dry the sample to a constant weight at 60 °C and record the dry weight (DW) for calculation of percent solids (Section 12.6). (The sample is dried at 60 °C to prevent the loss of mercury and other possible volatile metallic compounds, to facilitate sieving, and to ready the sample for grinding.)

11.3.2 To achieve homogeneity, sieve the dried sample using a 5-mesh polypropylene sieve and grind in a mortar and pestle. (The sieve, mortar and pestle should be cleaned between samples.) From the dried, ground material weigh accurately a representative 1.0 ±0.01 g aliquot (W) of the sample and transfer to a 250 mL Phillips beaker for acid extraction (Sections 1.6, 1.7, 1.8, and 1.9).

11.3.3 To the beaker add 4 mL of (1 + 1) HNO_3 and 10 mL of (1 + 4) HCl. Cover the lip of the beaker with a watch glass. Place the beaker on a hot plate for reflux extraction of the analytes. The hot plate should be located in a fume hood and previously adjusted to provide a reflux temperature of approximately 95 °C. (See the following note.)

NOTE: For proper heating adjust the temperature control of the hot plate such that an uncovered Griffin beaker containing 50 mL of water placed in the center of the hot plate can be maintained at a temperature approximately but no higher than 85 °C. (Once the beaker is covered with a watch glass the temperature of the water will rise to approximately 95 °C.) Also, a block digester capable of maintaining a temperature of 95 °C and equipped with 250 mL constricted volumetric digestion tubes may be substituted for the hot plate and conical beakers in the extraction step.

11.3.4 Heat the sample and gently reflux for 30 minutes. Very slight boiling may occur, however vigorous boiling must be avoided to prevent loss of the HCl-H_2O azeotrope. Some solution evaporation will occur (3–4 mL).

11.3.5 Allow the sample to cool and quantitatively transfer the extract to a 100 mL volumetric flask. Dilute to volume with reagent water, stopper and mix.

11.3.6 Allow the sample extract solution to stand overnight to separate insoluble material or centrifuge a portion of the sample solution until clear. (If after centrifuging or standing overnight the extract solution contains suspended solids that would clog the nebulizer, a portion of the extract solution may be filtered for their removal prior to analysis. However, care should be exercised to avoid potential contamination from filtration.) The sample extract is now ready for analysis. Because the effects of various matrices on the stability of diluted samples cannot be characterized, all analyses should be performed as soon as possible after the completed preparation.

11.4 Sample Analysis

11.4.1 Prior to daily calibration of the instrument inspect the sample introduction system including the nebulizer, torch, injector tube and uptake tubing for salt deposits, dirt and debris that would restrict solution flow and affect instrument performance. Clean the system when needed or on a daily basis.

11.4.2 Configure the instrument system to the selected power and operating conditions as determined in Sections 10.1 and 10.2.

11.4.3 The instrument must be allowed to become thermally stable before calibration and analyses. This usually requires at least 30 to 60 minutes of operation. After instrument warmup, complete any required optical profiling or alignment particular to the instrument.

11.4.4 For initial and daily operation calibrate the instrument according to the instrument manufacturer's recommended procedures, using mixed calibration standard solutions (Section 7.9) and the calibration blank (Section 7.10.1). A peristaltic pump must be used to introduce all solutions to the nebulizer. To allow equilibrium to be reached in the plasma, aspirate all solutions for 30 seconds after reaching the plasma before beginning integration of the background corrected signal to accumulate data. When possible, use the average value of replicate integration periods of the signal to be correlated to the analyte concentration. Flush the system with the rinse blank (Section 7.10.4) for a minimum of 60 seconds (Section 4.4) between each standard. The calibration line should consist of a minimum of a calibration blank and a high standard. Replicates of the blank and highest standard provide an optimal distribution of calibration standards to minimize the confidence band for a straight-line calibration in a response region with uniform variance.[20]

11.4.5 After completion of the initial requirements of this method (Sections 10.3 and 10.4), samples should be analyzed in the same operational manner used in the calibration routine with the rinse blank also being used between all sample solutions, LFBs, LFMs, and check solutions (Section 7.10.4).

11.4.6 During the analysis of samples, the laboratory must comply with the required quality control described in Sections 9.3 and 9.4. Only for the determination of dissolved analytes or the ''direct analysis'' of drinking water with turbidity of <1 NTU is the sample digestion step of the LRB, LFB, and LFM not required.

11.4.7 Determined sample analyte concentrations that are 90% or more of the upper limit of the analyte LDR must be diluted with reagent water that has been acidified in the same manner as calibration blank and reanalyzed (see Section 11.4.8). Also, for the interelement spectral interference correction routines to remain valid during sample analysis, the interferant concentration must not exceed its LDR. If the interferant LDR is exceeded, sample dilution with acidified reagent water and reanalysis is required. In these circumstances analyte detection limits are raised and determination by another approved test procedure that is either more sensitive and/or interference free is recommended.

11.4.8 When it is necessary to assess an operative matrix interference (e.g., signal reduction due to high dissolved solids), the tests described in Section 9.5 are recommended.

11.4.9 Report data as directed in Section 12.0.

11.5 If the method of standard additions (MSA) is used, standards are added at one or more levels to portions of a prepared sample. This technique[21] compensates for enhancement or depression of an analyte signal by a matrix. It will not correct for additive interferences such as contamination, interelement interferences, or baseline shifts. This technique is valid in the linear range when the interference effect is constant over the range, the added analyte responds the same as the endogenous analyte, and the signal is corrected for additive interferences. The simplest version of this technique is the single-addition method. This procedure calls for two identical aliquots of the sample solution to be taken. To the first aliquot, a small volume of standard is added; while to the second aliquot, a volume of acid blank is added equal to the standard addition. The sample concentration is calculated by the following:

$$\text{Sample Conc. (mg/L or mg/kg)} = \frac{S_2 \times V_1 \times C}{(S_1 - S_2) \times V_2}$$

where:

C = Concentration of the standard solution (mg/L)
S_1 = Signal for fortified aliquot
S_2 = Signal for unfortified aliquot
V_1 = Volume of the standard addition (L)
V_2 = Volume of the sample aliquot (L) used for MSA

For more than one fortified portion of the prepared sample, linear regression analysis can be applied using a computer or calculator program to obtain the concentration of the sample solution. An alternative to using the method of standard additions is use of the internal standard technique by adding one or more elements (not in the samples and verified not to cause an uncorrected interelement spectral interference) at the same concentration (which is sufficient for optimum precision) to the prepared samples (blanks and standards) that are affected the same as the analytes by the sample matrix. Use the ratio of analyte signal to the internal standard signal for calibration and quantitation.

12.0 Data Analysis and Calculations

12.1 Sample data should be reported in units of mg/L for aqueous samples and mg/kg dry weight for solid samples.

12.2 For dissolved aqueous analytes (Section 11.1) report the data generated directly from the instrument with allowance for sample dilution. Do not report analyte concentrations below the IDL.

12.3 For total recoverable aqueous analytes (Section 11.2), multiply solution analyte concentrations by the dilution factor 0.5, when 100 mL aliquot is used to produce the 50 mL final solution, and report data as instructed in Section 12.4. If a different aliquot volume other than 100 mL is used for sample preparation, adjust the dilution factor accordingly. Also, account for any additional dilution of the prepared sample solution needed to complete the determination of analytes exceeding 90% or more of the LDR upper limit. Do not report data below the determined analyte MDL concentration or below an adjusted detection limit reflecting smaller sample aliquots used in processing or additional dilutions required to complete the analysis.

12.4 For analytes with MDLs <0.01 mg/L, round the data values to the thousandth place and report analyte concentrations up to three significant figures. For analytes with MDLs <0.01 mg/L round the data values to the 100th place and report analyte concentrations up to three significant figures. Extract concentrations for solids data should be rounded in a similar manner before calculations in Section 12.5 are performed.

12.5 For total recoverable analytes in solid samples (Section 11.3), round the solution analyte concentrations (mg/L) as instructed in Section 12.4. Report the data up to three significant figures as mg/kg dry-weight basis unless specified otherwise by the program or data user. Calculate the concentration using the equation below:

$$\text{Sample Conc. (mg/kg) dry} - \text{weight basis} = \frac{C \times V \times D}{W}$$

where:

C = Concentration in extract (mg/L)
V = Volume of extract (L, 100 mL = 0.1L)
D = Dilution factor (undiluted = 1)
W = Weight of sample aliquot extracted (g × 0.001 = kg)

Do not report analyte data below the estimated solids MDL or an adjusted MDL because of additional dilutions required to complete the analysis.

12.6 To report percent solids in solid samples (Section 11.3) calculate as follows:

$$\%\ \text{solids (S)} = \frac{DW}{WW} \times 100$$

where:

DW = Sample weight (g) dried at 60 °C
WW = Sample weight (g) before drying

Note: If the data user, program or laboratory requires that the reported percent solids be determined by drying at 105 °C, repeat the procedure given in Section 11.3 using a separate portion (>20 g) of the sample and dry to constant weight at 103–105 °C.

12.7 The QC data obtained during the analyses provide an indication of the quality of the sample data and should be provided with the sample results.

13.0 Method Performance

13.1 Listed in Table 4 are typical single laboratory total recoverable MDLs determined for the recommended wavelengths using simultaneous ICP–AES and the operating conditions given in Table 5. The MDLs were determined in reagent blank matrix (best case situation). PTFE beakers were used to avoid boron and silica contamination from glassware with the final dilution to 50 mL completed in polypropylene centrifuged tubes. The listed MDLs for solids are estimates and were calculated from the aqueous MDL determinations.

13.2 Data obtained from single laboratory method testing are summarized in Table 6 for five types of water samples consisting of drinking water, surface water, ground water, and two wastewater effluents. The data presented cover all analytes except cerium and titanium. Samples were prepared using the procedure described in Section 11.2. For each matrix, five replicate aliquots were prepared, analyzed and the average of the five determinations used to define the sample background concentration of each analyte. In addition, two pairs of duplicates were fortified at different concentration levels. For each method analyte, the sample background concentration, mean percent recovery, standard

deviation of the percent recovery, and relative percent difference between the duplicate fortified samples are listed in Table 6. The variance of the five replicate sample background determinations is included in the calculated standard deviation of the percent recovery when the analyte concentration in the sample was greater than the MDL. The tap and well waters were processed in Teflon and quartz beakers and diluted in polypropylene centrifuged tubes. The nonuse of borosilicate glassware is reflected in the precision and recovery data for boron and silica in those two sample types.

13.3 Data obtained from single laboratory method testing are summarized in Table 7 for three solid samples consisting of EPA 884 Hazardous Soil, SRM 1645 River Sediment, and EPA 286 Electroplating Sludge. Samples were prepared using the procedure described in Section 11.3. For each method analyte, the sample background concentration, mean percent recovery of the fortified additions, the standard deviation of the percent recovery, and relative percent difference between duplicate additions were determined as described in Section 13.2. Data presented are for all analytes except cerium, silica, and titanium. Limited comparative data to other methods and SRM materials are presented in Reference 23 of Section 16.0.

13.4 Performance data for aqueous solutions independent of sample preparation from a multilaboratory study are provided in Table 8.[22]

13.5 Listed in Table 9 are regression equations for precision and bias for 25 analytes abstracted from EPA Method Study 27, a multilaboratory validation study of Method 200.7.[1] These equations were developed from data received from 12 laboratories using the total recoverable sample preparation procedure on reagent water, drinking water, surface water and three industrial effluents. For a complete review and description of the study, see Reference 16 of Section 16.0.

14.0 Pollution Prevention

14.1 Pollution prevention encompasses any technique that reduces or eliminates the quantity or toxicity of waste at the point of generation. Numerous opportunities for pollution prevention exist in laboratory operation. The EPA has established a preferred hierarchy of environmental management techniques that places pollution prevention as the management option of first choice. Whenever feasible, laboratory personnel should use pollution prevention techniques to address their waste generation (e.g., Section 7.8). When wastes cannot be feasibly reduced at the source, the Agency recommends recycling as the next best option.

14.2 For information about pollution prevention that may be applicable to laboratories and research institutions, consult ''Less is Better: Laboratory Chemical Management for Waste Reduction'', available from the American Chemical Society's Department of Government Relations and Science Policy, 1155 16th Street NW., Washington, DC 20036, (202) 872–4477.

15.0 Waste Management

15.1 The Environmental Protection Agency requires that laboratory waste management practices be conducted consistent with all applicable rules and regulations. The Agency urges laboratories to protect the air, water, and land by minimizing and controlling all releases from hoods and bench operations, complying with the letter and spirit of any sewer discharge permits and regulations, and by complying with all solid and hazardous waste regulations, particularly the hazardous waste identification rules and land disposal restrictions. For further information on waste management consult ''The Waste Management Manual for Laboratory Personnel'', available from the American Chemical Society at the address listed in the Section 14.2.

16.0 References

1. U.S. Environmental Protection Agency. Inductively Coupled Plasma—Atomic Emission Spectrometric Method for Trace Element Analysis of Water and Wastes—Method 200.7, Dec. 1982. EPA–600/4–79–020, revised March 1983.
2. U.S. Environmental Protection Agency. Inductively Coupled Plasma Atomic Emission Spectroscopy Method 6010, SW–846 Test Methods for Evaluating Solid Waste, 3rd Edition, 1986.
3. U.S. Environmental Protection Agency. Method 200.7: Determination of Metals and Trace Elements in Water and Wastes by Inductively Coupled Plasma—Atomic Emission Spectrometry, revision 3.3, EPA 600 4–91/010, June 1991.
4. U.S. Environmental Protection Agency. Inductively Coupled Plasma—Atomic Emission Spectrometry Method for the Analysis of Waters and Solids, EMMC, July 1992.
5. Fassel, V.A. et al. Simultaneous Determination of Wear Metals in Lubricating Oils by Inductively-Coupled Plasma Atomic Emission Spectrometry. Anal. Chem. *48:*516–519, 1976.
6. Merryfield, R.N. and R.C. Loyd. Simultaneous Determination of Metals in Oil by Inductively Coupled Plasma Emission Spectrometry. Anal. Chem. *51:*1965–1968, 1979.
7. Winge, R.K. et al. Inductively Coupled Plasma—Atomic Emission Spectroscopy: An Atlas of Spectral Information, Physical Science Data 20. Elsevier Science Publishing, New York, New York, 1985.
8. Boumans, P.W.J.M. Line Coincidence Tables for Inductively Coupled Plasma

Atomic Emission Spectrometry, 2nd edition. Pergamon Press, Oxford, United Kingdom, 1984.
9. Carcinogens—Working With Carcinogens, Department of Health, Education, and Welfare, Public Health Service, Center for Disease Control, National Institute for Occupational Safety and Health, Publication No. 77–206, Aug. 1977. Available from the National Technical Information Service (NTIS) as PB–277256.
10. OSHA Safety and Health Standards, General Industry, (29 CFR 1910), Occupational Safety and Health Administration, OSHA 2206, (Revised, January 1976).
11. Safety in Academic Chemistry Laboratories, American Chemical Society Publication, Committee on Chemical Safety, 3rd Edition, 1979.
12. Proposed OSHA Safety and Health Standards, Laboratories, Occupational Safety and Health Administration, FEDERAL REGISTER, July 24, 1986.
13. Rohrbough, W.G. et al. Reagent Chemicals, American Chemical Society Specifications, 7th edition. American Chemical Society, Washington, DC, 1986.
14. American Society for Testing and Materials. Standard Specification for Reagent Water, D1193–77. Annual Book of ASTM Standards, Vol. 11.01. Philadelphia, PA, 1991.
15. Code of Federal Regulations *40*, Ch. 1, Pt. 136 Appendix B.
16. Maxfield, R. and B. Mindak. EPA Method Study 27, Method 200.7 Trace Metals by ICP, Nov. 1983. Available from National Technical Information Service (NTIS) as PB 85–248–656.
17. Botto, R.I. Quality Assurance in Operating a Multielement ICP Emission Spectrometer. Spectrochim. Acta, 39B(1):95–113, 1984.
18. Wallace, G.F., Some Factors Affecting the Performance of an ICP Sample Introduction System. Atomic Spectroscopy, Vol. 4, p. 188–192, 1983.
19. Koirtyohann, S.R. et al. Nomenclature System for the Low-Power Argon Inductively Coupled Plasma, Anal. Chem. *52:*1965, 1980.
20. Deming, S.N. and S.L. Morgan. Experimental Design for Quality and Productivity in Research, Development, and Manufacturing, Part III, pp. 119–123. Short course publication by Statistical Designs, 9941 Rowlett, Suite 6, Houston, TX 77075, 1989.
21. Winefordner, J.D., Trace Analysis: Spectroscopic Methods for Elements, Chemical Analysis, Vol. 46, pp. 41–42.
22. Jones, C.L. et al. An Interlaboratory Study of Inductively Coupled Plasma Atomic Emission Spectroscopy Method 6010 and Digestion Method 3050. EPA–600/4–87–032, U.S. Environmental Protection Agency, Las Vegas, Nevada, 1987.
23. Martin, T.D., E.R. Martin and SE. Long. *Method 200.2: Sample Preparation Procedure for Spectrochemical Analyses of Total Recoverable Elements*, EMSL ORD, USEPA, 1989.

17.0 Tables, Diagrams, Flowcharts, and Validation Data

TABLE 1—WAVELENGTHS, ESTIMATED INSTRUMENT DETECTION LIMITS, AND RECOMMENDED CALIBRATION

Analyte	Wavelength[a] (nm)	Estimated detection limit[b] (µg/L)	Calibrate[c] to (mg/L)
Aluminum	308.215	45	10
Antimony	206.833	32	5
Arsenic	193.759	53	10
Barium	493.409	2.3	1
Beryllium	313.042	0.27	1
Boron	249.678	5.7	1
Cadmium	226.502	3.4	2
Calcium	315.887	30	10
Cerium	413.765	48	2
Chromium	205.552	6.1	5
Cobalt	228.616	7.0	2
Copper	324.754	5.4	2
Iron	259.940	6.2	10
Lead	220.353	42	10
Lithium	670.784	[d]3.7	5
Magnesium	279.079	30	10
Manganese	257.610	1.4	2
Mercury	194.227	2.5	2
Molybdenum	203.844	12	10
Nickel	231.604	15	2
Phosphorus	214.914	76	10
Potassium	766.491	[e]700	20
Selenium	196.090	75	5
Silica (SiO_2)	251.611	[d]26 (SiO_2)	10
Silver	328.068	7.0	0.5

TABLE 1—WAVELENGTHS, ESTIMATED INSTRUMENT DETECTION LIMITS, AND RECOMMENDED CALIBRATION—Continued

Analyte	Wavelength[a] (nm)	Estimated detection limit[b] (µg/L)	Calibrate[c] to (mg/L)
Sodium	588.995	29	10
Strontium	421.552	0.77	1
Thallium	190.864	40	5
Tin	189.980	25	4
Titanium	334.941	3.8	10
Vanadium	292.402	7.5	2
Zinc	213.856	1.8	5

[a] The wavelengths listed are recommended because of their sensitivity and overall acceptability. Other wavelengths may be substituted if they can provide the needed sensitivity and are treated with the same corrective techniques for spectral interference (see Section 4.1).

[b] These estimated 3-sigma instrumental detection limits [16] are provided only as a guide to instrumental limits. The method detection limits are sample dependent and may vary as the sample matrix varies. *Detection limits for solids* can be estimated by dividing these values by the grams extracted per liter, which depends upon the extraction procedure. Divide solution detection limits by 10 for 1 g extracted to 100 mL for solid detection limits.

[c] Suggested concentration for instrument calibration.[2] Other calibration limits in the linear ranges may be used.

[d] Calculated from 2-sigma data.[5]

[e] Highly dependent on operating conditions and plasma position.

TABLE 2—ON-LINE METHOD INTERELEMENT SPECTRAL INTERFERANCES ARISING FROM INTERFERANTS AT THE 100 MG/L LEVEL

Analyte	Wave-length (nm)	Interferant*
Ag	328.068	Ce, Ti, Mn
Al	308.215	V, Mo, Ce, Mn
As	193.759	V, Al, Co, Fe, Ni
B	249.678	None
Ba	493.409	None
Be	313.042	V, Ce
Ca	315.887	Co, Mo, Ce
Cd	226.502	Ni, Ti, Fe, Ce
Ce	413.765	None
Co	228.616	Ti, Ba, Cd, Ni, Cr, Mo, Ce
Cr	205.552	Be, Mo, Ni
Cu	324.754	Mo, Ti
Fe	259.940	None
Hg	194.227	V, Mo
K	766.491	None
Li	670.784	None
Mg	279.079	Ce
Mn	257.610	Ce
Mo	203.844	Ce
Na	588.995	None
Ni	231.604	Co, Tl
P	214.914	Cu, Mo
Pb	220.353	Co, Al, Ce, Cu, Ni, Ti, Fe
Sb	206.833	Cr, Mo, Sn, Ti, Ce, Fe
Se	196.099	Fe
SiO_2	251.611	None
Sn	189.980	Mo, Ti, Fe, Mn, Si
Sr	421.552	None
Tl	190.864	Ti, Mo, Co, Ce, Al, V, Mn
Ti	334.941	None
V	292.402	Mo, Ti, Cr, Fe, Ce
Zn	213.856	Ni, Cu, Fe

* These on-line interferences from method analytes and titanium only were observed using an instrument with 0.035 nm resolution (see Section 4.1.2). Interferant ranked by magnitude of intensity with the most severe interferant listed first in the row.

TABLE 3—MIXED STANDARD SOLUTIONS

Solution	Analytes
I	Ag, As, B, Ba, Ca, Cd, Cu, Mn, Sb, and Se
II	K, Li, Mo, Na, Sr, and Ti
III	Co, P, V, and Ce
IV	Al, Cr, Hg, SiO_2, Sn, and Zn
V	Be, Fe, Mg, Ni, Pb, and Tl

TABLE 4—TOTAL RECOVERABLE METHOD DETECTION LIMITS (MDL)

Analyte	MDLs Aqueous, mg/L(1)	Solids, mg/kg(2)
Ag	0.002	0.3
Al	0.02	3
As	0.008	2
B	0.003	—
Ba	0.001	0.2
Be	0.0003	0.1
Ca	0.01	2
Cd	0.001	0.2
Ce	0.02	3
Co	0.002	0.4
Cr	0.004	0.8
Cu	0.003	0.5
Fe	*0.03	6
Hg	0.007	2
K	0.3	60
Li	0.001	0.2
Mg	0.02	3
Mn	0.001	0.2
Mo	0.004	1
Na	0.03	6
Ni	0.005	1
P	0.06	12
Pb	0.01	2
Sb	0.008	2
Se	0.02	5
SiO_2	0.02	—
Sn	0.007	2
Sr	0.0003	0.1
Tl	0.001	0.2
Ti	0.02	3
V	0.003	1

TABLE 4—TOTAL RECOVERABLE METHOD DETECTION LIMITS (MDL)—Continued

Analyte	MDLs Aqueous, mg/L[1]	Solids, mg/kg[2]
Zn	0.002	0.3

[1] MDL concentrations are computed for original matrix with allowance for 2x sample preconcentration during preparation. Samples were processed in PTFE and diluted in 50-mL plastic centrifuge tubes.

[2] Estimated, calculated from aqueous MDL determinations.

— Boron not reported because of glassware contamination. Silica not determined in solid samples.

* Elevated value due to fume-hood contamination.

TABLE 5—INDUCTIVELY COUPLED PLASMA INSTRUMENT OPERATING CONDITIONS

Incident rf power	1100 watts
Reflected rf power	<5 watts
Viewing height above work coil	15 mm
Injector tube orifice i.d.	1 mm
Argon supply	liquid argon
Argon pressure	40 psi
Coolant argon flow rate	19 L/min.
Aerosol carrier argon flow rate	620 mL/min.
Auxiliary (plasma) argon flow rate	300 mL/min.
Sample uptake rate controlled to	1.2 mL/min.

TABLE 6—PRECISION AND RECOVERY DATA IN AQUEOUS MATRICES

Analyte	Sample conc. mg/L	Low spike mg/L	Average recovery R (%)	S (R)	RPD	High spike mg/L	Average recovery R (%)	S (R)	RPD
Tap Water									
Ag	<0.002	0.05	95	0.7	2.1	0.2	96	0.0	0.0
Al	0.185	0.05	98	8.8	1.7	0.2	105	3.0	3.1
As	<0.008	0.05	108	1.4	3.7	0.2	101	0.7	2.0
B	0.023	0.1	98	0.2	0.0	0.4	98	0.2	0.5
Ba	0.042	0.05	102	1.6	2.2	0.2	98	0.4	0.8
Be	<0.0003	0.01	100	0.0	0.0	0.1	99	0.0	0.0
Ca	35.2	5.0	101	8.8	1.7	20.0	103	2.0	0.9
Cd	<0.001	0.01	105	3.5	9.5	0.1	98	0.0	0.0
Co	<0.002	0.02	100	0.0	0.0	0.2	99	0.5	1.5
Cr	<0.004	0.01	110	0.0	0.0	0.1	102	0.0	0.0
Cu	<0.003	0.02	103	1.8	4.9	0.2	101	1.2	3.5
Fe	0.008	0.1	106	1.0	1.8	0.4	105	0.3	0.5
Hg	<0.007	0.05	103	0.7	1.9	0.2	100	0.4	1.0
K	1.98	5.0	109	1.4	2.3	20.	107	0.7	1.7
Li	0.006	0.02	103	6.9	3.8	0.2	110	1.9	4.4
Mg	8.08	5.0	104	2.2	1.5	20.0	100	0.7	1.1
Mn	<0.001	0.01	100	0.0	0.0	0.1	99	0.0	0.0
Mo	<0.004	0.02	95	3.5	10.5	0.2	108	0.5	1.4
Na	10.3	5.0	99	3.0	2.0	20.0	106	1.0	1.6
Ni	<0.005	0.02	108	1.8	4.7	0.2	104	1.1	2.9
P	0.045	0.1	102	13.1	9.4	0.4	104	3.2	1.3
Pb	<0.01	0.05	95	0.7	2.1	0.2	100	0.2	0.5
Sb	<0.008	0.05	99	0.7	2.0	0.2	102	0.7	2.0
Se	<0.02	0.1	87	1.1	3.5	0.4	99	0.8	2.3
SiO_2	6.5	5.0	104	3.3	3.4	20.0	96	1.1	2.3
Sn	<0.007	0.05	103	2.1	5.8	0.2	101	1.8	5.0
Sr	0.181	0.1	102	3.3	2.1	0.4	105	0.8	1.0
Tl	<0.02	0.1	101	3.9	10.9	0.4	101	0.1	0.3
V	<0.003	0.05	101	0.7	2.0	0.2	99	0.2	0.5
Zn	0.005	0.05	101	3.7	9.0	0.2	98	0.9	2.5
Pond Water									
Ag	<0.002	0.05	92	0.0	0.0	0.2	94	0.0	0.0
Al	0.819	0.2	88	10.0	5.0	0.8	100	2.9	3.7
As	<0.008	0.05	102	0.0	0.0	0.2	98	1.4	4.1
B	0.034	0.1	111	8.9	6.9	0.4	103	2.0	0.0
Ba	0.029	0.05	96	0.9	0.0	0.2	97	0.3	0.5
Be	<0.0003	0.01	95	0.4	1.1	0.2	95	0.0	0.0
Ca	53.9	5.0	*	*	0.7	20.0	100	2.0	1.5
Cd	<0.001	0.01	107	0.0	0.0	0.1	97	0.0	0.0
Co	<0.002	0.02	100	2.7	7.5	0.2	97	0.7	2.1
Cr	<0.004	0.01	105	3.5	9.5	0.1	103	1.1	2.9

Cu	<0.003	0.02	98	2.1	4.4	0.2	100	0.5	1.5
Fe	0.875	0.2	95	8.9	2.8	0.8	97	3.2	3.6
Hg	<0.007	0.05	97	3.5	10.3	0.2	98	0.0	0.0
K	2.48	5.0	106	0.3	0.1	20.0	103	0.2	0.4
Li	<0.001	0.02	110	0.0	0.0	0.2	106	0.2	0.5
Mg	10.8	5.0	102	0.5	0.0	20.0	96	0.7	1.3
Mn	0.632	0.01	*	*	0.2	0.1	97	2.3	0.3
Mo	<0.004	0.02	105	3.5	9.5	0.2	103	0.4	1.0
Na	17.8	5.0	103	1.3	0.4	20.0	94	0.3	0.0
Ni	<0.005	0.02	96	5.6	9.1	0.2	100	0.7	1.5
P	0.196	0.1	91	14.7	0.3	0.4	108	3.9	1.3
Pb	<0.01	0.05	96	2.6	7.8	0.2	100	0.7	2.0
Sb	<0.008	0.05	102	2.8	7.8	0.2	104	0.4	1.0
Se	<0.02	0.1	104	2.1	5.8	0.4	103	1.6	4.4
SiO_2	7.83	5.0	151	1.6	1.3	20.0	117	0.4	0.6
Sn	<0.007	0.05	98	0.0	0.0	0.2	99	1.1	3.0
Sr	0.129	0.1	105	0.4	0.0	0.4	99	0.1	0.2
Tl	<0.02	0.1	103	1.1	2.9	0.4	97	1.3	3.9
V	0.003	0.05	94	0.4	0.0	0.2	98	0.1	0.0
Zn	0.006	0.05	97	1.6	1.8	0.2	94	0.4	0.0
Well Water									
Ag	<0.002	0.05	97	0.7	2.1	0.2	96	0.2	0.5
Al	0.036	0.05	107	7.6	10.1	0.2	101	1.1	0.8
As	<0.008	0.05	107	0.7	1.9	0.2	104	0.4	1.0
B	0.063	0.1	97	0.6	0.7	0.4	98	0.8	2.1
Ba	0.102	0.05	102	3.0	0.0	0.2	99	0.9	1.0
Be	<0.0003	0.01	100	0.0	0.0	0.1	100	0.0	0.0
Ca	93.8	5.0	*	*	2.1	20.0	100	4.1	0.1
Cd	0.002	0.01	90	0.0	0.0	0.1	96	0.0	0.0
Co	<0.002	0.02	94	0.4	1.1	0.2	94	0.4	1.1
Cr	<0.004	0.01	100	7.1	20.0	0.1	100	0.4	1.0
Cu	<0.005	0.02	100	1.1	0.4	0.2	96	0.5	1.5
Fe	0.042	0.1	99	2.3	1.4	0.4	97	1.4	3.3
Hg	<0.007	0.05	94	2.8	8.5	0.2	93	1.2	3.8
K	6.21	5.0	96	3.4	3.6	20.0	101	1.2	2.3
Li	0.001	0.02	100	7.6	9.5	0.2	104	1.0	1.9
Mg	24.5	5.0	95	5.6	0.3	20.0	93	1.6	1.2
Mn	2.76	0.01	*	*	0.4	0.1	*	*	0.7
Mo	<0.004	0.02	108	1.8	4.7	0.2	101	0.2	0.5
Na	35.0	5.0	101	11.4	0.8	20.0	100	3.1	1.5
Ni	<0.005	0.02	112	1.8	4.4	0.2	96	0.2	0.5
P	0.197	0.1	95	12.7	1.9	0.4	98	3.4	0.9
Pb	<0.01	0.05	87	4.9	16.1	0.2	95	0.2	0.5
Sb	<0.008	0.05	98	2.8	8.2	0.2	99	1.4	4.0
Se	<0.02	0.1	102	0.4	1.0	0.4	94	1.1	3.4
SiO_2	13.1	5.0	93	4.8	2.8	20.0	99	0.8	0.0
Sn	<0.007	0.05	98	2.8	8.2	0.2	94	0.2	0.5
Sr	0.274	0.1	94	5.7	2.7	0.4	95	1.7	2.2

TABLE 6—PRECISION AND RECOVERY DATA IN AQUEOUS MATRICES—Continued

Analyte	Sample conc. mg/L	Low spike mg/L	Average recovery R (%)	S (R)	RPD	High spike mg/L	Average recovery R (%)	S (R)	RPD
Tl	<0.02	0.1	92	0.4	1.1	0.4	95	1.1	3.2
V	<0.003	0.05	98	0.0	0.0	0.2	99	0.4	1.0
Zn	0.538	0.05	*	*	0.7	0.2	99	2.5	1.1
Sewage Treatment Effluent									
Ag	0.009	0.05	92	1.5	3.6	0.2	95	0.1	0.0
Al	1.19	0.05	*	*	0.9	0.2	113	12.4	2.1
As	<0.008	0.05	99	2.1	6.1	0.2	93	2.1	6.5
B	0.226	0.1	217	16.3	9.5	0.4	119	13.1	20.9
Ba	0.189	0.05	90	6.8	1.7	0.2	99	1.6	0.5
Be	<0.0003	0.01	94	0.4	1.1	0.1	100	0.4	1.0
Ca	87.9	5.0	*	*	0.6	20.0	101	3.7	0.0
Cd	0.009	0.01	89	2.6	2.3	0.1	97	0.4	1.0
Co	0.016	0.02	95	3.1	0.0	0.2	93	0.4	0.5
Cr	0.128	0.01	*	*	1.5	0.1	97	2.4	2.7
Cu	0.174	0.02	98	33.1	4.7	0.2	98	3.0	1.4
Fe	1.28	0.1	*	*	2.8	0.4	111	7.0	0.6
Hg	<0.007	0.05	102	1.4	3.9	0.2	98	0.5	1.5
K	10.6	5.0	104	2.8	1.3	20.0	101	0.6	0.0
Li	0.011	0.02	103	8.5	3.2	0.2	105	0.8	0.5
Mg	22.7	5.0	100	4.4	0.0	20.0	92	1.1	0.2
Mn	0.199	0.01	*	*	2.0	0.1	104	1.9	0.3
Mo	0.125	0.02	110	21.2	6.8	0.2	102	1.3	0.9
Na	0.236	5.0	*	*	0.0	20.0	*	*	0.4
Ni	0.087	0.02	122	10.7	4.5	0.2	98	0.8	1.1
P	4.71	0.1	*	*	2.6	0.4	*	*	1.4
Pb	0.015	0.05	91	3.5	5.0	0.2	96	1.3	2.9
Sb	<0.008	0.05	97	0.7	2.1	0.2	103	1.1	2.9
Se	<0.02	0.1	108	3.9	10.0	0.4	101	2.6	7.2
SiO_2	16.7	5.0	124	4.0	0.9	20.0	108	1.1	0.8
Sn	0.016	0.05	90	3.8	0.0	0.2	95	1.0	0.0
Sr	0.515	0.1	103	6.4	0.5	0.4	96	1.6	0.2
Tl	<0.02	0.1	105	0.4	1.0	0.4	95	0.0	0.0
V	0.003	0.05	93	0.9	2.0	0.2	97	0.2	0.5
Zn	0.160	0.05	98	3.3	1.9	0.2	101	1.0	1.4
Industrial Effluent									
Ag	<0.0003	0.05	88	0.0	0.0	0.2	84	0.9	3.0
Al	0.054	0.05	88	11.7	12.2	0.2	90	3.9	8.1
As	<0.02	0.05	82	2.8	9.8	0.2	88	0.5	1.7
B	0.17	0.1	162	17.6	13.9	0.4	92	4.7	9.3
Ba	0.083	0.05	86	8.2	1.6	0.2	85	2.3	2.4
Be	<0.0006	0.01	94	0.4	1.1	0.1	82	1.4	4.9

Ca	500	5.0	*	*	2.8	20.0	*	*	2.3
Cd	0.008	0.01	85	4.7	6.1	0.1	82	1.4	4.4
Co	<0.004	0.02	93	1.8	5.4	0.2	83	0.4	1.2
Cr	0.165	0.01	*	*	4.5	0.1	106	6.6	5.6
Cu	0.095	0.02	93	23.3	0.9	0.2	95	2.7	2.8
Fe	0.315	0.1	88	16.4	1.0	0.4	99	6.5	8.0
Hg	<0.01	0.05	87	0.7	2.3	0.2	86	0.4	1.2
K	2.87	5.0	101	3.4	2.4	20.0	100	0.8	0.4
Li	0.069	0.02	103	24.7	5.6	0.2	104	2.5	2.2
Mg	6.84	5.0	87	3.1	0.0	20.0	87	0.9	1.2
Mn	0.141	0.01	*	*	1.2	0.1	89	6.6	4.8
Mo	1.27	0.02	*	*	0.0	0.2	100	15.0	2.7
Na	1500	5.0	*	*	2.7	20.0	*	*	2.0
Ni	0.014	0.02	98	4.4	3.0	0.2	87	0.5	1.1
P	0.326	0.1	105	16.0	4.7	0.4	97	3.9	1.4
Pb	0.251	0.05	80	19.9	1.4	0.2	88	5.0	0.9
Sb	2.81	0.05	*	*	0.4	0.2	*	*	2.0
Se	0.021	0.1	106	2.6	3.2	0.4	105	1.9	4.6
SiO_2	6.83	5.0	99	6.8	1.7	20.0	100	2.2	3.0
Sn	<0.01	0.05	87	0.7	2.3	0.2	86	0.4	1.2
Sr	6.54	0.1	*	*	2.0	0.4	*	*	2.7
Tl	<0.03	0.1	87	1.8	5.8	0.4	84	1.1	3.6
V	<0.005	0.05	90	1.4	4.4	0.2	84	1.1	3.6
Zn	0.024	0.05	89	6.0	4.4	0.2	91	3.5	8.9

S (R) Standard deviation of percent recovery.
RPD Relative percent difference between duplicate spike determinations.
<Sample concentration below established method detection limit.
* Spike concentration <10% of sample background concentration.

TABLE 7—PRECISION AND RECOVERY DATA IN SOLID MATRICES

Analyte	Sample conc. mg/kg	Low + spike mg/kg	Average recovery R (%)	S (R)	RPD	High + spike mg/kg	Average recovery R (%)	S (R)	RPD
EPA Hazardous Soil #884									
Ag	1.1	20	98	0.7	1.0	100	96	0.2	0.6
Al	5080	20	*	*	7.2	100	*	*	5.4
As	5.7	20	95	5.4	10.6	100	96	1.4	3.6
B	20.4	100	93	2.7	5.3	400	100	2.1	5.5
Ba	111	20	98	71.4	22.2	100	97	10.0	1.0
Be	0.66	20	97	0.7	2.3	100	99	0.1	0.2
Ca	85200	–	–	–	–	–	–	–	–
Cd	2	20	93	0.7	1.0	100	94	0.2	0.4
Co	5.5	20	96	3.5	7.7	100	93	0.8	2.1
Cr	79.7	20	87	28.8	16.5	100	104	1.3	1.1
Cu	113	20	110	16.2	4.4	100	104	4.0	4.2
Fe	16500	–	–	–	–	–	–	–	–
Hg	<1.4	10	92	2.5	7.7	40	98	0.0	0.0

TABLE 7—PRECISION AND RECOVERY DATA IN SOLID MATRICES—Continued

Analyte	Sample conc. mg/kg	Low + spike mg/kg	Average recovery R (%)	S (R)	RPD	High + spike mg/kg	Average recovery R (%)	S (R)	RPD
K	621	500	121	1.3	0.0	2000	107	0.9	1.8
Li	6.7	10	113	3.5	4.4	40	106	0.6	0.6
Mg	24400	500	*	*	8.4	2000	*	*	10.1
Mn	343	20	*	*	8.5	100	95	11.0	1.6
Mo	5.3	20	88	5.3	13.2	100	91	1.4	4.1
Na	195	500	102	2.2	2.4	2000	100	1.5	3.7
Ni	15.6	20	100	1.8	0.0	100	94	1.5	3.6
P	595	500	106	13.4	8.0	2000	103	3.2	2.7
Pb	145	20	88	51.8	17.9	100	108	15.6	17.4
Sb	6.1	20	83	3.9	7.5	100	81	1.9	5.9
Se	<5	20	79	14.7	52.4	100	99	0.7	2.1
Sn	16.6	20	91	34.6	5.8	80	112	8.7	2.8
Sr	102	100	84	9.6	10.8	400	94	2.5	4.6
Tl	<4	20	92	4.8	14.6	100	91	1.5	4.6
V	16.7	20	104	4.2	5.4	100	99	0.8	1.7
Zn	131	20	103	31.2	7.3	100	104	7.2	6.4
EPA Electroplating Sludge #286									
Ag	6	20	96	0.2	0.4	100	93	0.1	0.4
Al	4980	20	*	*	4.4	100	*	*	5.6
As	32	20	94	1.3	0.8	100	97	0.7	1.6
B	210	100	113	2.0	1.6	400	98	1.9	3.5
Ba	39.8	20	0	6.8	0.3	100	0	1.6	5.7
Be	0.32	20	96	0.2	0.5	100	101	0.7	2.0
Ca	48500	–	–	–	–	–	–	–	–
Cd	108	20	98	2.5	0.8	100	96	0.5	0.5
Co	5.9	20	93	2.9	5.7	100	93	0.6	1.5
Cr	7580	20	*	*	0.7	100	*	*	1.3
Cu	806	20	*	*	1.5	100	94	8.3	0.7
Fe	31100	–	–	–	–	–	–	–	–
Hg	6.1	10	90	2.5	4.0	40	97	1.7	4.3
K	2390	500	75	8.3	4.0	2000	94	2.9	3.8
Li	9.1	10	101	2.8	0.5	40	106	1.6	3.1
Mg	1950	500	110	2.0	0.8	2000	108	2.3	3.2
Mn	262	20	*	*	1.8	100	91	1.2	0.9
Mo	13.2	20	92	2.1	2.9	100	92	0.3	0.0
Na	73400	500	*	*	1.7	2000	*	*	1.4
Ni	456	20	*	*	0.4	100	88	2.7	0.9
P	9610	500	*	*	2.9	2000	114	7.4	3.4
Pb	1420	20	*	*	2.1	100	*	*	1.3
Sb	<2	20	76	0.9	3.3	100	75	2.8	10.7
Se	6.3	20	86	9.0	16.6	100	103	1.6	2.7
Sn	24.0	20	87	4.0	2.7	80	92	0.7	0.0

Sr	145	100	90	8.1	8.1	400	93	2.4	4.6
Tl	16	20	89	4.6	5.3	100	92	0.8	0.9
V	21.7	20	95	1.2	1.0	100	96	0.4	0.9
Zn	12500	20	*	*	0.8	100	*	*	0.8
NBS 1645 River Sediment									
Ag	1.6	20	92	0.4	1.0	100	96	0.3	0.9
Al	5160	20	*	*	8.4	100	*	*	2.4
As	62.8	20	89	14.4	9.7	100	97	2.9	5.0
B	31.9	100	116	7.1	13.5	400	95	0.6	1.5
Ba	54.8	20	95	6.1	2.8	100	98	1.2	1.3
Be	0.72	20	101	0.4	1.0	100	103	1.4	3.9
Ca	28000	–	–	–	–	–	–	–	–
Cd	9.7	20	100	1.1	0.0	100	101	0.7	1.8
Co	9.4	20	98	3.8	4.8	100	98	0.9	1.8
Cr	28500	20	*	*	0.4	100	*	*	0.7
Cu	109	20	115	8.5	0.0	100	102	1.8	1.0
Fe	84800	–	–	–	–	–	–	–	–
Hg	3.1	10	99	4.3	7.7	40	96	0.7	1.0
K	452	500	98	4.1	2.0	2000	106	1.4	2.3
Li	3.7	10	101	2.0	0.7	40	108	1.3	3.0
Mg	6360	500	*	*	1.8	2000	93	2.7	1.0
Mn	728	20	*	*	3.5	100	97	12.4	2.2
Mo	17.9	20	97	12.5	18.5	100	98	0.6	0.0
Na	1020	500	92	2.6	0.0	2000	97	1.1	1.7
Ni	36.2	20	94	5.9	4.0	100	100	1.1	1.5
P	553	500	102	1.4	0.9	2000	100	0.8	1.6
Pb	707	20	*	*	0.8	100	103	5.9	0.4
Sb	22.8	20	86	2.3	0.0	100	88	0.6	0.9
Se	6.7	20	103	14.3	27.1	100	98	3.1	7.6
Sn	309	20	*	*	1.0	80	101	7.9	2.7
Sr	782	100	91	12.3	3.0	400	96	3.3	2.6
Tl	<4	20	90	0.0	0.0	100	95	1.3	4.0
V	20.1	20	89	5.4	5.8	100	98	0.7	0.0
Zn	1640	20	*	*	1.8	100	*	*	1.1

S (R) Standard deviation of percent recovery.
RPD Relative percent difference between duplicate spike determinations.
<Sample concentration below established method detection limit.
* Spike concentration <10% of sample background concentration.
– Not spiked.
+ Equivalent.

TABLE 8—ICP–AES INSTRUMENTAL PRECISION AND ACCURACY FOR AQUEOUS SOLUTIONS [A]

Element	Mean conc. (mg/L)	N [b]	RSD (%)	Accurace [c] (% of Nominal)
Al	14.8	8	6.3	100
Sb	15.1	8	7.7	102
As	14.7	7	6.4	99
Ba	3.66	7	3.1	99
Be	3.78	8	5.8	102
Cd	3.61	8	7.0	97
Ca	15.0	8	7.4	101
Cr	3.75	8	8.2	101
Co	3.52	8	5.9	95
Cu	3.58	8	5.6	97
Fe	14.8	8	5.9	100
Pb	14.4	7	5.9	97
Mg	14.1	8	6.5	96
Mn	3.70	8	4.3	100
Mo	3.70	8	6.9	100
Ni	3.70	7	5.7	100
K	14.1	8	6.6	95
Se	15.3	8	7.5	104
Na	14.0	8	4.2	95
Tl	15.1	7	8.5	102
V	3.51	8	6.6	95
Zn	3.57	8	8.3	96

[a] These performance values are independent of sample preparation because the labs analyzed portions of the same solutions using sequential or simultaneous instruments.
[b] N = Number of measurements for mean and relative standard deviation (RSD).
[c] Accuracy is expressed as a percentage of the nominal value for each analyte in the acidified, multi-element solutions.

TABLE 9—MULTILABORATORY ICP PRECISION AND ACCURACY DATA*

Analyte	Concentration µg/L	Total recoverable digestion µ/L
Aluminum	69–4792	X = 0.9380 (C) + 22.1 SR = 0.0481 (X) + 18.8
Antimony	77–1406	0.8908 (C) + 0.9 SR = 0.0682 (X) + 2.5
Arsenic	69–1887	X = 1.0175 (C) + 3.9 SR = 0.0643 (X) + 10.3
Barium	9–377	X = 0.8.80 (C) + 1.68 SR = 0.0826 (X) + 3.54
Beryllium	3–1906	X = 1.0177 (C) − 0.55 SR = 0.0445 (X) − 0.10
Boron	19–5189	X = 0.9676 (C) + 18.7 SR = 0.0743 (X) + 21.1
Cadmium	9–1943	X = 1.0137 (C) − 0.65 SR = 0.0332 (X) + 0.90
Calcium	17–47170	X = 0.9658 (C) + 0.8 SR = 0.0327 (X) + 10.1
Chromium	13–1406	X = 1.0049 (C) − 1.2 SR = 0.0571 (X) + 1.0
Cobalt	17–2340	X = 0.9278 (C) + 1.5 SR = 0.0407 (X) + 0.4
Copper	8–1887	X = 0.9647 (C) − 3.64 SR = 0.0406 (X) + 0.96
Iron	13–9359	X = 0.9830 (C) + 5.7 SR = 0.0790 (X) + 11.5
Lead	42–4717	X = 1.0056 (C) + 4.1 SR = 0.0448 (X) + 3.5
Magnesium	34–13868	X = 0.9879 (C) + 2.2 SR = 0.0268 (X) + 8.1
Manganese	4–1887	X = 0.9725 (C) + 0.07 SR = 0.0400 (X) + 0.82
Molybdenum	17–1830	X = 0.9707 (C) − 2.3 SR = 0.0529 (X) + 2.1
Nickel	17–47170	X = 0.9869 (C) + 1.5 SR = 0.0393 (X) + 2.2
Potassium	347–14151	X = 0.9355 (C) − 183.1 SR = 0.0329 (X) + 60.9
Selenium	69–1415	X = 0.9737 (C) − 1.0 SR = 0.0443 (X) + 6.6
Silicon	189–9434	X = 0.9737 (C) − 22.6

TABLE 9—MULTILABORATORY ICP PRECISION AND ACCURACY DATA*—Continued

Analyte	Concentration µg/L	Total recoverable digestion µ/L
		SR = 0.2133 (X) + 22.6
Silver	8–189	X = 0.3987 (C) + 8.25
		SR = 0.1836 (X) − 0.27
Sodium	35–47170	X = 1.0526 (C) + 26.7
		SR = 0.0884 (X) + 50.5
Thallium	79–1434	X = 0.9238 (C) + 5.5
		SR = 0.0106 (X) + 48.0
Vanadium	13–4698	X = 0.9551 (C) + 0.4
		SR = 0.0472 (X) + 0.5
Zinc	7–7076	X = 0.9500 (C) + 1.82
		SR = 0.0153 (X) + 7.78

*—Regression equations abstracted from Reference 16.
X = Mean Recovery, µg/L.
C = True Value for the Concentration, µg/L.
SR = Single-analyst Standard Deviation, µg/L.

Pb-Cu ICP-AES EMISSION PROFILE

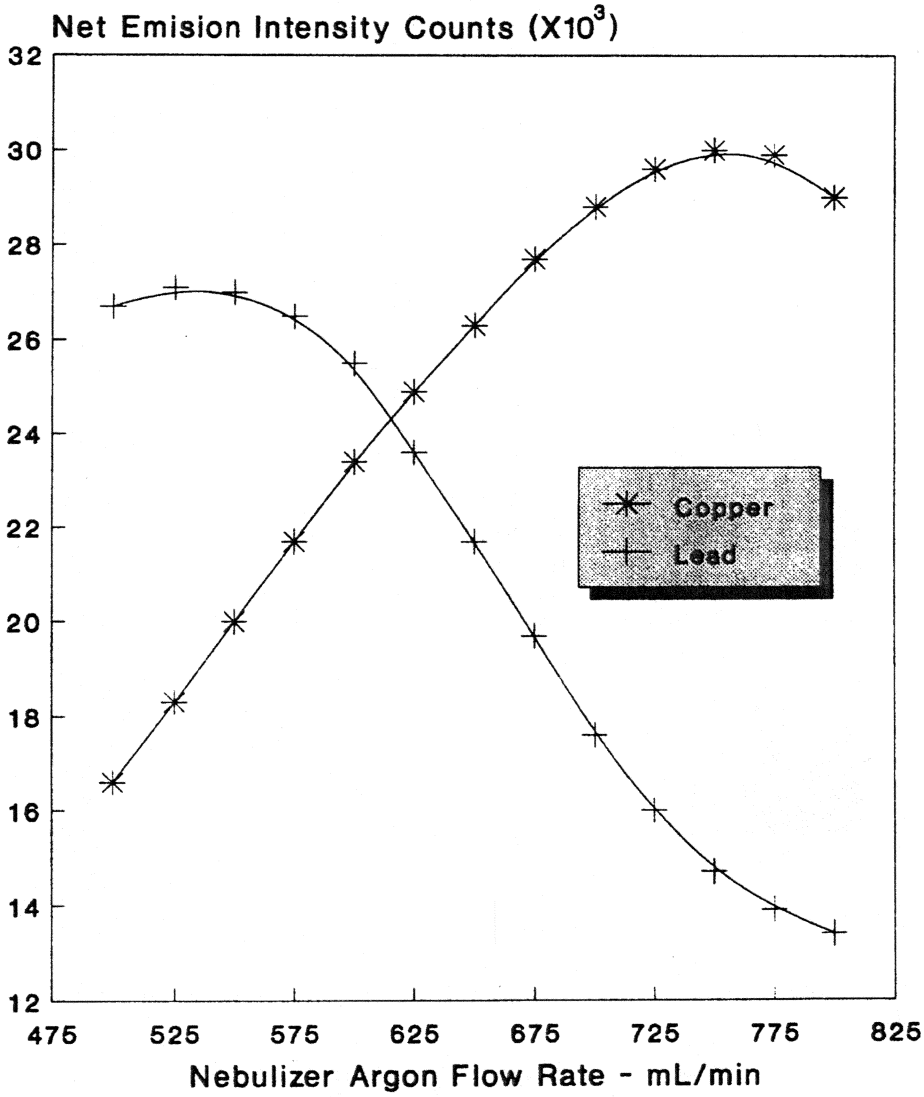

Figure 1

[77 FR 29813, May 18, 2012]

APPENDIX D TO PART 136—PRECISION AND RECOVERY STATEMENTS FOR METHODS FOR MEASURING METALS

Two selected methods from ''Methods for Chemical Analysis of Water and Wastes,'' EPA–600/4–79–020 (1979) have been subjected to interlaboratory method validation studies. The two selected methods are for Thallium and Zinc. The following precision and recovery statements are presented in this appendix and incorporated into Part 136:

Method 279.2

For Thallium, Method 279.2 (Atomic Absorption, Furnace Technique) replace the Precision and Accuracy Section statement with the following:

Precision and Accuracy

An interlaboratory study on metal analyses by this method was conducted by the Quality Assurance Branch (QAB) of the Environmental Monitoring Systems Laboratory—Cincinnati (EMSL–CI). Synthetic concentrates containing various levels of this element were added to reagent water, surface water, drinking water and three effluents. These samples were digested by the total digestion procedure, 4.1.3 in this manual. Results for the reagent water are given below. Results for other water types and study details are found in ''EPA Method Study 31, Trace Metals by Atomic Absorption (Furnace Techniques),'' National Technical Information Service, 5285 Port Royal Road, Springfield, VA 22161 Order No. PB 86–121 704/AS, by Copeland, F.R. and Maney, J.P., January 1986.

For a concentration range of 10.00–252 μg/L

$X = 0.8781(C) - 0.715$
$S = 0.1112(X) + 0.669$
$SR = 0.1005(X) + 0.241$

Where:

C = True Value for the Concentration, μg/L
X = Mean Recovery, μg/L
S = Multi-laboratory Standard Deviation, μg/L
SR = Single-analyst Standard Deviation, μg/L

Method 289.2

For Zinc, Method 289.2 (Atomic Absorption, Furnace Technique) replace the Precision and Accuracy Section statement with the following:

Precision and Accuracy

An interlaboratory study on metal analyses by this method was conducted by the Quality Assurance Branch (QAB) of the Environmental Monitoring Systems Laboratory—Cincinnati (EMSL–CI). Synthetic concentrates containing various levels of this element were added to reagent water, surface water, drinking water and three effluents. These samples were digested by the total digestion procedure, 4.1.3 in this manual. Results for the reagent water are given below. Results for other water types and study details are found in ''EPA Method Study 31, Trace Metals by Atomic Absorption (Furnace Techniques),'' National Technical Information Service, 5285 Port Royal Road, Springfield, VA 22161 Order No. PB 86–121 704/AS, by Copeland, F.R. and Maney, J.P., January 1986.

For a concentration range of 0.51–189 μg/L

$X = 1.6710(C) + 1.485$
$S = 0.6740(X) - 0.342$
$SR = 0.3895(X) - 0.384$

Where:

C = True Value for the Concentration, μg/L
X = Mean Recovery, μg/L
S = Multi-laboratory Standard Deviation, μg/L
SR = Single-analyst Standard Deviation, μg/L

[77 FR 29833, May 18, 2012]

PART 140—MARINE SANITATION DEVICE STANDARD

Sec.
140.1 Definitions.
140.2 Scope of standard.
140.3 Standard.
140.4 Complete prohibition.
140.5 Analytical procedures.

AUTHORITY: 33 U.S.C. 1322, as amended.

SOURCE: 41 FR 4453, Jan. 29, 1976, unless otherwise noted.

§ 140.1 Definitions.

For the purpose of these standards the following definitions shall apply:

(a) *Sewage* means human body wastes and the wastes from toilets and other receptacles intended to receive or retain body wastes;

(b) *Discharge* includes, but is not limited to, any spilling, leaking, pumping, pouring, emitting, emptying, or dumping;

(c) *Marine sanitation device* includes any equipment for installation onboard a vessel and which is designed to receive, retain, treat, or discharge sewage and any process to treat such sewage;

(d) *Vessel* includes every description of watercraft or other artificial contrivance used, or capable of being used,

as a means of transportation on waters of the United States;

(e) *New vessel* refers to any vessel on which construction was initiated on or after January 30, 1975;

(f) *Existing vessel* refers to any vessel on which construction was initiated before January 30, 1975;

(g) *Fecal coliform bacteria* are those organisms associated with the intestines of warm-blooded animals that are commonly used to indicate the presence of fecal material and the potential presence of organisms capable of causing human disease.

§ 140.2 Scope of standard.

The standard adopted herein applies only to vessels on which a marine sanitation device has been installed. The standard does not require the installation of a marine sanitation device on any vessel that is not so equipped. The standard applies to vessels owned and operated by the United States unless the Secretary of Defense finds that compliance would not be in the interest of national security.

§ 140.3 Standard.

(a) (1) In freshwater lakes, freshwater reservoirs or other freshwater impoundments whose inlets or outlets are such as to prevent the ingress or egress by vessel traffic subject to this regulation, or in rivers not capable of navigation by interstate vessel traffic subject to this regulation, marine sanitation devices certified by the U.S. Coast Guard (see 33 CFR part 159, published in 40 FR 4622, January 30, 1975), installed on all vessels shall be designed and operated to prevent the overboard discharge of sewage, treated or untreated, or of any waste derived from sewage. This shall not be construed to prohibit the carriage of Coast Guard-certified flow-through treatment devices which have been secured so as to prevent such discharges.

(2) In all other waters, Coast Guard-certified marine sanitation devices installed on all vessels shall be designed and operated to either retain, dispose of, or discharge sewage. If the device has a discharge, subject to paragraph (d) of this section, the effluent shall not have a fecal coliform bacterial count of greater than 1,000 per 100 milliliters nor visible floating solids. Waters where a Coast Guard-certified marine sanitation device permitting discharge is allowed include coastal waters and estuaries, the Great Lakes and inter-connected waterways, freshwater lakes and impoundments accessible through locks, and other flowing waters that are navigable interstate by vessels subject to this regulation.

(b) This standard shall become effective on January 30, 1977 for new vessels and on January 30, 1980 for existing vessels (or, in the case of vessels owned and operated by the Department of Defense, two years and five years, for new and existing vessels, respectively, after promulgation of implementing regulations by the Secretary of Defense under section 312(d) of the Act).

(c) Any vessel which is equipped as of the date of promulgation of this regulation with a Coast Guard-certified flow-through marine sanitation device meeting the requirements of paragraph (a)(2) of this section, shall not be required to comply with the provisions designed to prevent the overboard discharge of sewage, treated or untreated, in paragraph (a)(1) of this section, for the operable life of that device.

(d) After January 30, 1980, subject to paragraphs (e) and (f) of this section, marine sanitation devices on all vessels on waters that are not subject to a prohibition of the overboard discharge of sewage, treated or untreated, as specified in paragraph (a)(1) of this section, shall be designed and operated to either retain, dispose of, or discharge sewage, and shall be certified by the U.S. Coast Guard. If the device has a discharge, the effluent shall not have a fecal coliform bacterial count of greater than 200 per 100 milliliters, nor suspended solids greater than 150 mg/1.

(e) Any existing vessel on waters not subject to a prohibition of the overboard discharge of sewage in paragraph (a)(1) of this section, and which is equipped with a certified device on or before January 30, 1978, shall not be required to comply with paragraph (d) of this section, for the operable life of that device.

(f) Any new vessel on waters not subject to the prohibition of the overboard discharge of sewage in paragraph (a)(1)

of this section, and on which construction is initiated before January 31, 1980, which is equipped with a marine sanitation device before January 31, 1980, certified under paragraph (a)(2) of this section, shall not be required to comply with paragraph (d) of this section, for the operable life of that device.

(g) The degrees of treatment described in paragraphs (a) and (d) of this section are ''appropriate standards'' for purposes of Coast Guard and Department of Defense certification pursuant to section 312(g)(2) of the Act.

[41 FR 4453, Jan. 29, 1976, as amended at 60 FR 33932, June 29, 1995]

§ 140.4 Complete prohibition.

(a) Prohibition pursuant to CWA section 312(f)(3): a State may completely prohibit the discharge from all vessels of any sewage, whether treated or not, into some or all of the waters within such State by making a written application to the Administrator, Environmental Protection Agency, and by receiving the Administrator's affirmative determination pursuant to section 312(f)(3) of the Act. Upon receipt of an application under section 312(f)(3) of the Act, the Administrator will determine within 90 days whether adequate facilities for the safe and sanitary removal and treatment of sewage from all vessels using such waters are reasonably available. Applications made by States pursuant to section 312(f)(3) of the Act shall include:

(1) A certification that the protection and enhancement of the waters described in the petition require greater environmental protection than the applicable Federal standard;

(2) A map showing the location of commercial and recreational pump-out facilities;

(3) A description of the location of pump-out facilities within waters designated for no discharge;

(4) The general schedule of operating hours of the pump-out facilities;

(5) The draught requirements on vessels that may be excluded because of insufficient water depth adjacent to the facility;

(6) Information indicating that treatment of wastes from such pump-out facilities is in conformance with Federal law; and

(7) Information on vessel population and vessel usage of the subject waters.

(b) Prohibition pursuant to CWA section 312(f)(4)(A): a State may make a written application to the Administrator, Environmental Protection Agency, under section 312(f)(4)(A) of the Act, for the issuance of a regulation completely prohibiting discharge from a vessel of any sewage, whether treated or not, into particular waters of the United States or specified portions thereof, which waters are located within the boundaries of such State. Such application shall specify with particularly the waters, or portions thereof, for which a complete prohibition is desired. The application shall include identification of water recreational areas, drinking water intakes, aquatic sanctuaries, identifiable fish-spawning and nursery areas, and areas of intensive boating activities. If, on the basis of the State's application and any other information available to him, the Administrator is unable to make a finding that the waters listed in the application require a complete prohibition of any discharge in the waters or portions thereof covered by the application, he shall state the reasons why he cannot make such a finding, and shall deny the application. If the Administrator makes a finding that the waters listed in the application require a complete prohibition of any discharge in all or any part of the waters or portions thereof covered by the State's application, he shall publish notice of such findings together with a notice of proposed rule making, and then shall proceed in accordance with 5 U.S.C. 553. If the Administrator's finding is that applicable water quality standards require a complete prohibition covering a more restricted or more expanded area than that applied for by the State, he shall state the reasons why his finding differs in scope from that requested in the State's application.

(1) For the following waters the discharge from a vessel of any sewage (whether treated or not) is completely prohibited pursuant to CWA section 312(f)(4)(A):

(i) Boundary Waters Canoe Area, formerly designated as the Superior, Little Indian Sioux, and Caribou Roadless Areas, in the Superior National Forest, Minnesota, as described in 16 U.S.C. 577–577d1.

(ii) Waters of the State of Florida within the boundaries of the Florida Keys National Marine Sanctuary as delineated on a map of the Sanctuary at *http://www.fknms.nos.noaa.gov/*.

(2)(i) For the marine waters of the State of California, the following vessels are completely prohibited from discharging any sewage (whether treated or not):

(A) A large passenger vessel;

(B) A large oceangoing vessel equipped with a holding tank which has not fully used the holding tank's capacity, or which contains more than *de minimis* amounts of sewage generated while the vessel was outside of the marine waters of the State of California.

(ii) For purposes of paragraph (b)(2) of this section:

(A) ''Marine waters of the State of California'' means the territorial sea measured from the baseline as determined in accordance with the Convention on the Territorial Sea and the Contiguous Zone and extending seaward a distance of three miles, and all enclosed bays and estuaries subject to tidal influences from the Oregon border (41.999325 North Latitude, 124.212110 West Longitude, decimal degrees, NAD 1983) to the Mexican border (32.471231 North Latitude, 117.137814 West Longitude, decimal degrees, NAD 1983). A map illustrating these waters can be obtained from EPA or viewed at *http://www.epa.gov/region9/water/no-discharge/overview.html*.

(B) A ''large passenger vessel'' means a passenger vessel, as defined in section 2101(22) of title 46, United States Code, of 300 gross tons or more, as measured under the International Convention on Tonnage Measurement of Ships, 1969, measurement system in 46 U.S.C. 14302, or the regulatory measurement system of 46 U.S.C. 14502 for vessels not measured under 46 U.S.C. 14302, that has berths or overnight accommodations for passengers.

(C) A ''large oceangoing vessel'' means a private, commercial, government, or military vessel of 300 gross tons or more, as measured under the International Convention on Tonnage Measurement of Ships, 1969, measurement system in 46 U.S.C. 14302, or the regulatory measurement system of 46 U.S.C. 14502 for vessels not measured under 46 U.S.C.14302, that is not a large passenger vessel.

(D) A ''holding tank'' means a tank specifically designed, constructed, and fitted for the retention of treated or untreated sewage, that has been designated and approved by the ship's flag Administration on the ship's stability plan; a designated ballast tank is not a holding tank for this purpose.

(c)(1) *Prohibition pursuant to CWA* section 312(f)(4)(B): A State may make written application to the Administrator of the Environmental Protection Agency under section 312(f)(4)(B) of the Act for the issuance of a regulation establishing a drinking water intake no discharge zone which completely prohibits discharge from a vessel of any sewage, whether treated or untreated, into that zone in particular waters, or portions thereof, within such State. Such application shall:

(i) Identify and describe exactly and in detail the location of the drinking water supply intake(s) and the community served by the intake(s), including average and maximum expected amounts of inflow;

(ii) Specify and describe exactly and in detail, the waters, or portions thereof, for which a complete prohibition is desired, and where appropriate, average, maximum and low flows in million gallons per day (MGD) or the metric equivalent;

(iii) Include a map, either a USGS topographic quadrant map or a NOAA nautical chart, as applicable, clearly marking by latitude and longitude the waters or portions thereof to be designated a drinking water intake zone; and

(iv) Include a statement of basis justifying the size of the requested drinking water intake zone, for example, identifying areas of intensive boating activities.

(2) If the Administrator finds that a complete prohibition is appropriate under this paragraph, he or she shall publish notice of such finding together

with a notice of proposed rulemaking, and then shall proceed in accordance with 5 U.S.C. 553. If the Administrator's finding is that a complete prohibition covering a more restricted or more expanded area than that applied for by the State is appropriate, he or she shall also include a statement of the reasons why the finding differs in scope from that requested in the State's application.

(3) If the Administrator finds that a complete prohibition is inappropriate under this paragraph, he or she shall deny the application and state the reasons for such denial.

(4) For the following waters the discharge from a vessel of any sewage, whether treated or not, is completely prohibited pursuant to CWA section 312(f)(4)(B):

(i) Two portions of the Hudson River in New York State, the first is bounded by an east-west line through the most northern confluence of the Mohawk River which will be designated by the Troy-Waterford Bridge (126th Street Bridge) on the south and Lock 2 on the north, and the second of which is bounded on the north by the southern end of Houghtaling Island and on the south by a line between the Village of Roseton on the western shore and Low Point on the eastern shore in the vicinity of Chelsea, as described in Items 2 and 3 of 6 NYCRR Part 858.4.

(ii) [Reserved]

[41 FR 4453, Jan. 29, 1976, as amended at 42 FR 43837, Aug. 31, 1977; 60 FR 63945, Dec. 13, 1995; 63 FR 1320, Jan. 8, 1998; 67 FR 35743, May 21, 2002; 77 FR 11411, Feb. 27, 2012]

§ 140.5 Analytical procedures.

In determining the composition and quality of effluent discharge from marine sanitation devices, the procedures contained in 40 CFR part 136, ''Guidelines Establishing Test Procedures for the Analysis of Pollutants,'' or subsequent revisions or amendments thereto, shall be employed.

PART 141—NATIONAL PRIMARY DRINKING WATER REGULATIONS

Subpart A—General

Sec.
141.1 Applicability.
141.2 Definitions.
141.3 Coverage.
141.4 Variances and exemptions.
141.5 Siting requirements.
141.6 Effective dates.

Subpart B—Maximum Contaminant Levels

141.11 Maximum contaminant levels for inorganic chemicals.
141.12 [Reserved]
141.13 Maximum contaminant levels for turbidity.

Subpart C—Monitoring and Analytical Requirements

141.21 Coliform sampling.
141.22 Turbidity sampling and analytical requirements.
141.23 Inorganic chemical sampling and analytical requirements.
141.24 Organic chemicals, sampling and analytical requirements.
141.25 Analytical methods for radioactivity.
141.26 Monitoring frequency and compliance requirements for radionuclides in community water systems
141.27 Alternate analytical techniques.
141.28 Certified laboratories.
141.29 Monitoring of consecutive public water systems.
APPENDIX A TO SUBPART C OF PART 141—ALTERNATIVE TESTING METHODS APPROVED FOR ANALYSES UNDER THE SAFE DRINKING WATER ACT

Subpart D—Reporting and Recordkeeping

141.31 Reporting requirements.
141.32 [Reserved]
141.33 Record maintenance.
141.34 [Reserved]
141.35 Reporting for unregulated contaminant monitoring results.

Subpart E—Special Regulations, Including Monitoring Regulations and Prohibition on Lead Use

141.40 Monitoring requirements for unregulated contaminants.
141.41 Special monitoring for sodium.
141.42 Special monitoring for corrosivity characteristics.
141.43 Prohibition on use of lead pipes, solder, and flux.

Subpart F—Maximum Contaminant Level Goals and Maximum Residual Disinfectant Level Goals

141.50 Maximum contaminant level goals for organic contaminants.
141.51 Maximum contaminant level goals for inorganic contaminants.

141.52 Maximum contaminant level goals for microbiological contaminants.
141.53 Maximum contaminant level goals for disinfection byproducts.
141.54 Maximum residual disinfectant level goals for disinfectants.
141.55 Maximum contaminant level goals for radionuclides.

Subpart G—National Primary Drinking Water Regulations: Maximum Contaminant Levels and Maximum Residual Disinfectant Levels

141.60 Effective dates.
141.61 Maximum contaminant levels for organic contaminants.
141.62 Maximum contaminant levels for inorganic contaminants.
141.63 Maximum contaminant levels (MCLs) for microbiological contaminants.
141.64 Maximum contaminant levels for disinfection byproducts.
141.65 Maximum residual disinfectant levels.
141.66 Maximum contaminant levels for radionuclides.

Subpart H—Filtration and Disinfection

141.70 General requirements.
141.71 Criteria for avoiding filtration.
141.72 Disinfection.
141.73 Filtration.
141.74 Analytical and monitoring requirements.
141.75 Reporting and recordkeeping requirements.
141.76 Recycle provisions.

Subpart I—Control of Lead and Copper

141.80 General requirements.
141.81 Applicability of corrosion control treatment steps to small, medium-size and large water systems.
141.82 Description of corrosion control treatment requirements.
141.83 Source water treatment requirements.
141.84 Lead service line replacement requirements.
141.85 Public education and supplemental monitoring requirements.
141.86 Monitoring requirements for lead and copper in tap water.
141.87 Monitoring requirements for water quality parameters.
141.88 Monitoring requirements for lead and copper in source water.
141.89 Analytical methods.
141.90 Reporting requirements.
141.91 Recordkeeping requirements.

Subpart J—Use of Non-Centralized Treatment Devices

141.100 Criteria and procedures for public water systems using point-of-entry devices.
141.101 Use of bottled water.

Subpart K—Treatment Techniques

141.110 General requirements.
141.111 Treatment techniques for acrylamide and epichlorohydrin.

Subpart L—Disinfectant Residuals, Disinfection Byproducts, and Disinfection Byproduct Precursors

141.130 General requirements.
141.131 Analytical requirements.
141.132 Monitoring requirements.
141.133 Compliance requirements.
141.134 Reporting and recordkeeping requirements.
141.135 Treatment technique for control of disinfection byproduct (DBP) precursors.

Subparts M–N [Reserved]

Subpart O—Consumer Confidence Reports

141.151 Purpose and applicability of this subpart.
141.152 Effective dates.
141.153 Content of the reports.
141.154 Required additional health information.
141.155 Report delivery and recordkeeping.
APPENDIX A TO SUBPART O OF PART 141—REGULATED CONTAMINANTS

Subpart P—Enhanced Filtration and Disinfection—Systems Serving 10,000 or More People

141.170 General requirements.
141.171 Criteria for avoiding filtration.
141.172 Disinfection profiling and benchmarking.
141.173 Filtration.
141.174 Filtration sampling requirements.
141.175 Reporting and recordkeeping requirements.

Subpart Q—Public Notification of Drinking Water Violations

141.201 General public notification requirements.
141.202 *Tier 1 Public Notice*—Form, manner, and frequency of notice.
141.203 *Tier 2 Public Notice*—Form, manner, and frequency of notice.
141.204 *Tier 3 Public Notice*—Form, manner, and frequency of notice.
141.205 Content of the public notice.

141.206 Notice to new billing units or new customers.
141.207 Special notice of the availability of unregulated contaminant monitoring results.
141.208 Special notice for exceedance of the SMCL for fluoride.
141.209 Special notice for nitrate exceedances above MCL by non-community water systems (NCWS), where granted permission by the primacy agency under §141.11(d).
141.210 Notice by primacy agency on behalf of the public water system.
141.211 Special notice for repeated failure to conduct monitoring of the source water for *Cryptosporidium* and for failure to determine bin classification or mean *Cryptosporidium* level.
APPENDIX A TO SUBPART Q OF PART 141—NPDWR VIOLATIONS AND SITUATIONS REQUIRING PUBLIC NOTICE
APPENDIX B TO SUBPART Q OF PART 141—STANDARD HEALTH EFFECTS LANGUAGE FOR PUBLIC NOTIFICATION
APPENDIX C TO SUBPART Q OF PART 141—LIST OF ACRONYMS USED IN PUBLIC NOTIFICATION REGULATION

Subpart R [Reserved]

Subpart S—Ground Water Rule

141.400 General requirements and applicability.
141.401 Sanitary surveys for ground water systems.
141.402 Ground water source microbial monitoring and analytical methods.
141.403 Treatment technique requirements for ground water systems.
141.404 Treatment technique violations for ground water systems.
141.405 Reporting and recordkeeping for ground water systems.

Subpart T—Enhanced Filtration and Disinfection—Systems Serving Fewer Than 10,000 People

GENERAL REQUIREMENTS

141.500 General requirements.
141.501 Who is subject to the requirements of subpart T?
141.502 When must my system comply with these requirements?
141.503 What does subpart T require?

FINISHED WATER RESERVOIRS

141.510 Is my system subject to the new finished water reservoir requirements?
141.511 What is required of new finished water reservoirs?

ADDITIONAL WATERSHED CONTROL REQUIREMENTS FOR UNFILTERED SYSTEMS

141.520 Is my system subject to the updated watershed control requirements?
141.521 What updated watershed control requirements must my unfiltered system implement to continue to avoid filtration?
141.522 How does the State determine whether my system's watershed control requirements are adequate?

DISINFECTION PROFILE

141.530 What is a disinfection profile and who must develop one?
141.531 What criteria must a State use to determine that a profile is unnecessary?
141.532 How does my system develop a disinfection profile and when must it begin?
141.533 What data must my system collect to calculate a disinfection profile?
141.534 How does my system use this data to calculate an inactivation ratio?
141.535 What if my system uses chloramines, ozone, or chlorine dioxide for primary disinfection?
141.536 My system has developed an inactivation ratio; what must we do now?

DISINFECTION BENCHMARK

141.540 Who has to develop a disinfection benchmark?
141.541 What are significant changes to disinfection practice?
141.542 What must my system do if we are considering a significant change to disinfection practices?
141.543 How is the disinfection benchmark calculated?
141.544 What if my system uses chloramines, ozone, or chlorine dioxide for primary disinfection?

COMBINED FILTER EFFLUENT REQUIREMENTS

141.550 Is my system required to meet subpart T combined filter effluent turbidity limits?
141.551 What strengthened combined filter effluent turbidity limits must my system meet?
141.552 My system consists of ''alternative filtration'' and is required to conduct a demonstration—what is required of my system and how does the State establish my turbidity limits?
141.553 My system practices lime softening—is there any special provision regarding my combined filter effluent?

INDIVIDUAL FILTER TURBIDITY REQUIREMENTS

141.560 Is my system subject to individual filter turbidity requirements?
141.561 What happens if my system's turbidity monitoring equipment fails?

141.562 My system only has two or fewer filters—is there any special provision regarding individual filter turbidity monitoring?
141.563 What follow-up action is my system required to take based on continuous turbidity monitoring?
141.564 My system practices lime softening—is there any special provision regarding my individual filter turbidity monitoring?

REPORTING AND RECORDKEEPING REQUIREMENTS

141.570 What does subpart T require that my system report to the State?
141.571 What records does subpart T require my system to keep?

Subpart U—Initial Distribution System Evaluations

141.600 General requirements.
141.601 Standard monitoring.
141.602 System specific studies.
141.603 40/30 certification.
141.604 Very small system waivers.
141.605 Subpart V compliance monitoring location recommendations.

Subpart V—Stage 2 Disinfection Byproducts Requirements

141.620 General requirements.
141.621 Routine monitoring.
141.622 Subpart V monitoring plan.
141.623 Reduced monitoring.
141.624 Additional requirements for consecutive systems.
141.625 Conditions requiring increased monitoring.
141.626 Operational evaluation levels.
141.627 Requirements for remaining on reduced TTHM and HAA5 monitoring based on subpart L results.
141.628 Requirements for remaining on increased TTHM and HAA5 monitoring based on subpart L results.
141.629 Reporting and recordkeeping requirements.

Subpart W—Enhanced Treatment for *Cryptosporidium*

GENERAL REQUIREMENTS

141.700 General requirements.

SOURCE WATER MONITORING REQUIREMENTS

141.701 Source water monitoring.
141.702 Sampling schedules.
141.703 Sampling locations.
141.704 Analytical methods.
141.705 Approved laboratories.
141.706 Reporting source water monitoring results.
141.707 Grandfathering previously collected data.

DISINFECTION PROFILING AND BENCHMARKING REQUIREMENTS

141.708 Requirements when making a significant change in disinfection practice.
141.709 Developing the disinfection profile and benchmark.

TREATMENT TECHNIQUE REQUIREMENTS

141.710 Bin classification for filtered systems.
141.711 Filtered system additional *Cryptosporidium* treatment requirements.
141.712 Unfiltered system *Cryptosporidium* treatment requirements.
141.713 Schedule for compliance with *Cryptosporidium* treatment requirements.
141.714 Requirements for uncovered finished water storage facilities.

REQUIREMENTS FOR MICROBIAL TOOLBOX COMPONENTS

141.715 Microbial toolbox options for meeting *Cryptosporidium* treatment requirements.
141.716 Source toolbox components.
141.717 Pre-filtration treatment toolbox components.
141.718 Treatment performance toolbox components.
141.719 Additional filtration toolbox components.
141.720 Inactivation toolbox components.

REPORTING AND RECORDKEEPING REQUIREMENTS

141.721 Reporting requirements.
141.722 Recordkeeping requirements.

REQUIREMENTS FOR SANITARY SURVEYS PERFORMED BY EPA

141.723 Requirements to respond to significant deficiencies identified in sanitary surveys performed by EPA.

Subpart X—Aircraft Drinking Water Rule

141.800 Applicability and compliance date.
141.801 Definitions.
141.802 Coliform sampling plan.
141.803 Coliform sampling.
141.804 Aircraft water system operations and maintenance plan.
141.805 Notification to passengers and crew.
141.806 Reporting requirements.
141.807 Recordkeeping requirements.
141.808 Audits and inspections.
141.809 Supplemental treatment.
141.810 Violations.

Subpart Y—Revised Total Coliform Rule

141.851 General.

141.852 Analytical methods and laboratory certification.
141.853 General monitoring requirements for all public water systems.
141.854 Routine monitoring requirements for non-community water systems serving 1,000 or fewer people using only ground water.
141.855 Routine monitoring requirements for community water systems serving 1,000 or fewer people using only ground water.
141.856 Routine monitoring requirements for subpart H public water systems serving 1,000 or fewer people.
141.857 Routine monitoring requirements for public water systems serving more than 1,000 people.
141.858 Repeat monitoring and *E. coli* requirements.
141.859 Coliform treatment technique triggers and assessment requirements for protection against potential fecal contamination.
141.860 Violations.
141.861 Reporting and recordkeeping.

AUTHORITY: 42 U.S.C. 300f, 300g–1, 300g–2, 300g–3, 300g–4, 300g–5, 300g–6, 300j–4, 300j–9, and 300j–11.

SOURCE: 40 FR 59570, Dec. 24, 1975, unless otherwise noted.

EDITORIAL NOTE: Nomenclature changes to part 141 appear at 69 FR 18803, Apr. 9, 2004.

NOTE: For community water systems serving 75,000 or more persons, monitoring must begin 1 year following promulation and the effective date of the MCL is 2 years following promulgation. For community water systems serving 10,000 to 75,000 persons, monitoring must begin within 3 years from the date of promulgation and the effective date of the MCL is 4 years from the date of promulgation. Effective immediately, systems that plan to make significant modifications to their treatment processes for the purpose of complying with the TTHM MCL are required to seek and obtain State approval of their treatment modification plans. This note affects §§141.2, 141.6, 141.12, 141.24 and 141.30. For additional information see 44 FR 68641, Nov. 29, 1979.

Subpart A—General

§ 141.1 Applicability.

This part establishes primary drinking water regulations pursuant to section 1412 of the Public Health Service Act, as amended by the Safe Drinking Water Act (Pub. L. 93–523); and related regulations applicable to public water systems.

§ 141.2 Definitions.

As used in this part, the term:

Act means the Public Health Service Act, as amended by the Safe Drinking Water Act, Public Law 93–523.

Action level, is the concentration of lead or copper in water specified in §141.80(c) which determines, in some cases, the treatment requirements contained in subpart I of this part that a water system is required to complete.

Bag filters are pressure-driven separation devices that remove particulate matter larger than 1 micrometer using an engineered porous filtration media. They are typically constructed of a non-rigid, fabric filtration media housed in a pressure vessel in which the direction of flow is from the inside of the bag to outside.

Bank filtration is a water treatment process that uses a well to recover surface water that has naturally infiltrated into ground water through a river bed or bank(s). Infiltration is typically enhanced by the hydraulic gradient imposed by a nearby pumping water supply or other well(s).

Best available technology or *BAT* means the best technology, treatment techniques, or other means which the Administrator finds, after examination for efficacy under field conditions and not solely under laboratory conditions, are available (taking cost into consideration). For the purposes of setting MCLs for synthetic organic chemicals, any BAT must be at least as effective as granular activated carbon.

Cartridge filters are pressure-driven separation devices that remove particulate matter larger than 1 micrometer using an engineered porous filtration media. They are typically constructed as rigid or semi-rigid, self-supporting filter elements housed in pressure vessels in which flow is from the outside of the cartridge to the inside.

Clean compliance history is, for the purposes of subpart Y, a record of no MCL violations under §141.63; no monitoring violations under §141.21 or subpart Y; and no coliform treatment technique trigger exceedances or treatment technique violations under subpart Y.

Coagulation means a process using coagulant chemicals and mixing by which colloidal and suspended materials are

destabilized and agglomerated into flocs.

Combined distribution system is the interconnected distribution system consisting of the distribution systems of wholesale systems and of the consecutive systems that receive finished water.

Community water system means a public water system which serves at least 15 service connections used by year-round residents or regularly serves at least 25 year-round residents.

Compliance cycle means the nine-year calendar year cycle during which public water systems must monitor. Each compliance cycle consists of three three-year compliance periods. The first calendar year cycle begins January 1, 1993 and ends December 31, 2001; the second begins January 1, 2002 and ends December 31, 2010; the third begins January 1, 2011 and ends December 31, 2019.

Compliance period means a three-year calendar year period within a compliance cycle. Each compliance cycle has three three-year compliance periods. Within the first compliance cycle, the first compliance period runs from January 1, 1993 to December 31, 1995; the second from January 1, 1996 to December 31, 1998; the third from January 1, 1999 to December 31, 2001.

Comprehensive performance evaluation (CPE) is a thorough review and analysis of a treatment plant's performance-based capabilities and associated administrative, operation and maintenance practices. It is conducted to identify factors that may be adversely impacting a plant's capability to achieve compliance and emphasizes approaches that can be implemented without significant capital improvements. For purpose of compliance with subparts P and T of this part, the comprehensive performance evaluation must consist of at least the following components: Assessment of plant performance; evaluation of major unit processes; identification and prioritization of performance limiting factors; assessment of the applicability of comprehensive technical assistance; and preparation of a CPE report.

Confluent growth means a continuous bacterial growth covering the entire filtration area of a membrane filter, or a portion thereof, in which bacterial colonies are not discrete.

Consecutive system is a public water system that receives some or all of its finished water from one or more wholesale systems. Delivery may be through a direct connection or through the distribution system of one or more consecutive systems.

Contaminant means any physical, chemical, biological, or radiological substance or matter in water.

Conventional filtration treatment means a series of processes including coagulation, flocculation, sedimentation, and filtration resulting in substantial particulate removal.

Corrosion inhibitor means a substance capable of reducing the corrosivity of water toward metal plumbing materials, especially lead and copper, by forming a protective film on the interior surface of those materials.

CT or *CTcalc* is the product of ''residual disinfectant concentration'' (C) in mg/1 determined before or at the first customer, and the corresponding ''disinfectant contact time'' (T) in minutes, *i.e.*, ''C'' × ''T''. If a public water system applies disinfectants at more than one point prior to the first customer, it must determine the CT of each disinfectant sequence before or at the first customer to determine the total percent inactivation or ''total inactivation ratio.'' In determining the total inactivation ratio, the public water system must determine the residual disinfectant concentration of each disinfection sequence and corresponding contact time before any subsequent disinfection application point(s). ''$CT_{99.9}$'' is the CT value required for 99.9 percent (3–log) inactivation of *Giardia lamblia* cysts. $CT_{99.9}$ for a variety of disinfectants and conditions appear in tables 1.1–1.6, 2.1, and 3.1 of § 141.74(b)(3).

$$\frac{\text{CTcalc}}{\text{CT}_{99.9}}$$

is the inactivation ratio. The sum of the inactivation ratios, or total inactivation ratio shown as

$$\sum \frac{(\mathrm{CTcalc})}{(\mathrm{CT}_{99.9})}$$

is calculated by adding together the inactivation ratio for each disinfection sequence. A total inactivation ratio equal to or greater than 1.0 is assumed to provide a 3-log inactivation of *Giardia lamblia* cysts.

Diatomaceous earth filtration means a process resulting in substantial particulate removal in which (1) a precoat cake of diatomaceous earth filter media is deposited on a support membrance (septum), and (2) while the water is filtered by passing through the cake on the septum, additional filter media known as body feed is continuously added to the feed water to maintain the permeability of the filter cake.

Direct filtration means a series of processes including coagulation and filtration but excluding sedimentation resulting in substantial particulate removal.

Disinfectant means any oxidant, including but not limited to chlorine, chlorine dioxide, chloramines, and ozone added to water in any part of the treatment or distribution process, that is intended to kill or inactivate pathogenic microorganisms.

Disinfectant contact time (''T'' in CT calculations) means the time in minutes that it takes for water to move from the point of disinfectant application or the previous point of disinfectant residual measurement to a point before or at the point where residual disinfectant concentration (''C'') is measured. Where only one ''C'' is measured, ''T'' is the time in minutes that it takes for water to move from the point of disinfectant application to a point before or at where residual disinfectant concentration (''C'') is measured. Where more than one ''C'' is measured, ''T'' is (a) for the first measurement of ''C'', the time in minutes that it takes for water to move from the first or only point of disinfectant application to a point before or at the point where the first ''C'' is measured and (b) for subsequent measurements of ''C'', the time in minutes that it takes for water to move from the previous ''C'' measurement point to the ''C'' measurement point for which the particular ''T'' is being calculated. Disinfectant contact time in pipelines must be calculated based on ''plug flow'' by dividing the internal volume of the pipe by the maximum hourly flow rate through that pipe. Disinfectant contact time within mixing basins and storage reservoirs must be determined by tracer studies or an equivalent demonstration.

Disinfection means a process which inactivates pathogenic organisms in water by chemical oxidants or equivalent agents.

Disinfection profile is a summary of *Giardia lamblia* inactivation through the treatment plant. The procedure for developing a disinfection profile is contained in § 141.172 (Disinfection profiling and benchmarking) in subpart P and §§ 141.530–141.536 (Disinfection profile) in subpart T of this part.

Domestic or other non-distribution system plumbing problem means a coliform contamination problem in a public water system with more than one service connection that is limited to the specific service connection from which the coliform-positive sample was taken.

Dose equivalent means the product of the absorbed dose from ionizing radiation and such factors as account for differences in biological effectiveness due to the type of radiation and its distribution in the body as specified by the International Commission on Radiological Units and Measurements (ICRU).

Dual sample set is a set of two samples collected at the same time and same location, with one sample analyzed for TTHM and the other sample analyzed for HAA5. Dual sample sets are collected for the purposes of conducting an IDSE under subpart U of this part and determining compliance with the TTHM and HAA5 MCLs under subpart V of this part.

Effective corrosion inhibitor residual, for the purpose of subpart I of this part only, means a concentration sufficient to form a passivating film on the interior walls of a pipe.

Enhanced coagulation means the addition of sufficient coagulant for improved removal of disinfection byproduct precursors by conventional filtration treatment.

Enhanced softening means the improved removal of disinfection byproduct precursors by precipitative softening.

Filter profile is a graphical representation of individual filter performance, based on continuous turbidity measurements or total particle counts versus time for an entire filter run, from startup to backwash inclusively, that includes an assessment of filter performance while another filter is being backwashed.

Filtration means a process for removing particulate matter from water by passage through porous media.

Finished water is water that is introduced into the distribution system of a public water system and is intended for distribution and consumption without further treatment, except as treatment necessary to maintain water quality in the distribution system (e.g., booster disinfection, addition of corrosion control chemicals).

First draw sample means a one-liter sample of tap water, collected in accordance with §141.86(b)(2), that has been standing in plumbing pipes at least 6 hours and is collected without flushing the tap.

Flocculation means a process to enhance agglomeration or collection of smaller floc particles into larger, more easily settleable particles through gentle stirring by hydraulic or mechanical means.

Flowing stream is a course of running water flowing in a definite channel.

GAC10 means granular activated carbon filter beds with an empty-bed contact time of 10 minutes based on average daily flow and a carbon reactivation frequency of every 180 days, except that the reactivation frequency for GAC10 used as a best available technology for compliance with subpart V MCLs under §141.64(b)(2) shall be 120 days.

GAC20 means granular activated carbon filter beds with an empty-bed contact time of 20 minutes based on average daily flow and a carbon reactivation frequency of every 240 days.

Ground water under the direct influence of surface water (GWUDI) means any water beneath the surface of the ground with significant occurrence of insects or other macroorganisms, algae, or large-diameter pathogens such as *Giardia lamblia* or *Cryptosporidium*, or significant and relatively rapid shifts in water characteristics such as turbidity, temperature, conductivity, or pH which closely correlate to climatological or surface water conditions. Direct influence must be determined for individual sources in accordance with criteria established by the State. The State determination of direct influence may be based on site-specific measurements of water quality and/or documentation of well construction characteristics and geology with field evaluation.

Gross alpha particle activity means the total radioactivity due to alpha particle emission as inferred from measurements on a dry sample.

Gross beta particle activity means the total radioactivity due to beta particle emission as inferred from measurements on a dry sample.

Haloacetic acids (five) (HAA5) mean the sum of the concentrations in milligrams per liter of the haloacetic acid compounds (monochloroacetic acid, dichloroacetic acid, trichloroacetic acid, monobromoacetic acid, and dibromoacetic acid), rounded to two significant figures after addition.

Halogen means one of the chemical elements chlorine, bromine or iodine.

Initial compliance period means the first full three-year compliance period which begins at least 18 months after promulgation, except for contaminants listed at §141.61(a) (19)–(21), (c) (19)–(33), and §141.62(b) (11)–(15), initial compliance period means the first full three-year compliance period after promulgation for systems with 150 or more service connections (January 1993–December 1995), and first full three-year compliance period after the effective date of the regulation (January 1996–December 1998) for systems having fewer than 150 service connections.

Lake/reservoir refers to a natural or man made basin or hollow on the Earth's surface in which water collects or is stored that may or may not have a current or single direction of flow.

Large water system, for the purpose of subpart I of this part only, means a water system that serves more than 50,000 persons.

Lead service line means a service line made of lead which connects the water main to the building inlet and any lead pigtail, gooseneck or other fitting which is connected to such lead line.

Legionella means a genus of bacteria, some species of which have caused a type of pneumonia called Legionnaires Disease.

Level 1 assessment is an evaluation to identify the possible presence of sanitary defects, defects in distribution system coliform monitoring practices, and (when possible) the likely reason that the system triggered the assessment. It is conducted by the system operator or owner. Minimum elements include review and identification of atypical events that could affect distributed water quality or indicate that distributed water quality was impaired; changes in distribution system maintenance and operation that could affect distributed water quality (including water storage); source and treatment considerations that bear on distributed water quality, where appropriate (e.g., whether a ground water system is disinfected); existing water quality monitoring data; and inadequacies in sample sites, sampling protocol, and sample processing. The system must conduct the assessment consistent with any State directives that tailor specific assessment elements with respect to the size and type of the system and the size, type, and characteristics of the distribution system.

Level 2 assessment is an evaluation to identify the possible presence of sanitary defects, defects in distribution system coliform monitoring practices, and (when possible) the likely reason that the system triggered the assessment. A Level 2 assessment provides a more detailed examination of the system (including the system's monitoring and operational practices) than does a Level 1 assessment through the use of more comprehensive investigation and review of available information, additional internal and external resources, and other relevant practices. It is conducted by an individual approved by the State, which may include the system operator. Minimum elements include review and identification of atypical events that could affect distributed water quality or indicate that distributed water quality was impaired; changes in distribution system maintenance and operation that could affect distributed water quality (including water storage); source and treatment considerations that bear on distributed water quality, where appropriate (e.g., whether a ground water system is disinfected); existing water quality monitoring data; and inadequacies in sample sites, sampling protocol, and sample processing. The system must conduct the assessment consistent with any State directives that tailor specific assessment elements with respect to the size and type of the system and the size, type, and characteristics of the distribution system. The system must comply with any expedited actions or additional actions required by the State in the case of an *E. coli* MCL violation.

Locational running annual average (LRAA) is the average of sample analytical results for samples taken at a particular monitoring location during the previous four calendar quarters.

Man-made beta particle and photon emitters means all radionuclides emitting beta particles and/or photons listed in Maximum Permissible Body Burdens and Maximum Permissible Concentration of Radionuclides in Air or Water for Occupational Exposure, NBS Handbook 69, except the daughter products of thorium–232, uranium–235 and uranium–238.

Maximum contaminant level means the maximum permissable level of a contaminant in water which is delivered to any user of a public water system.

Maximum contaminant level goal or *MCLG* means the maximum level of a contaminant in drinking water at which no known or anticipated adverse effect on the health of persons would occur, and which allows an adequate margin of safety. Maximum contaminant level goals are nonenforceable health goals.

Maximum residual disinfectant level (MRDL) means a level of a disinfectant added for water treatment that may not be exceeded at the consumer's tap without an unacceptable possibility of

adverse health effects. For chlorine and chloramines, a PWS is in compliance with the MRDL when the running annual average of monthly averages of samples taken in the distribution system, computed quarterly, is less than or equal to the MRDL. For chlorine dioxide, a PWS is in compliance with the MRDL when daily samples are taken at the entrance to the distribution system and no two consecutive daily samples exceed the MRDL. MRDLs are enforceable in the same manner as maximum contaminant levels under Section 1412 of the Safe Drinking Water Act. There is convincing evidence that addition of a disinfectant is necessary for control of waterborne microbial contaminants. Notwithstanding the MRDLs listed in §141.65, operators may increase residual disinfectant levels of chlorine or chloramines (but not chlorine dioxide) in the distribution system to a level and for a time necessary to protect public health to address specific microbiological contamination problems caused by circumstances such as distribution line breaks, storm runoff events, source water contamination, or cross-connections.

Maximum residual disinfectant level goal (MRDLG) means the maximum level of a disinfectant added for water treatment at which no known or anticipated adverse effect on the health of persons would occur, and which allows an adequate margin of safety. MRDLGs are nonenforceable health goals and do not reflect the benefit of the addition of the chemical for control of waterborne microbial contaminants.

Maximum Total Trihalomethane Potential (MTP) means the maximum concentration of total trihalomethanes produced in a given water containing a disinfectant residual after 7 days at a temperature of 25 °C or above.

Medium-size water system, for the purpose of subpart I of this part only, means a water system that serves greater than 3,300 and less than or equal to 50,000 persons.

Membrane filtration is a pressure or vacuum driven separation process in which particulate matter larger than 1 micrometer is rejected by an engineered barrier, primarily through a size-exclusion mechanism, and which has a measurable removal efficiency of a target organism that can be verified through the application of a direct integrity test. This definition includes the common membrane technologies of microfiltration, ultrafiltration, nanofiltration, and reverse osmosis.

Near the first service connection means at one of the 20 percent of all service connections in the entire system that are nearest the water supply treatment facility, as measured by water transport time within the distribution system.

Non-community water system means a public water system that is not a community water system. A non-community water system is either a ''transient non-community water system (TWS)'' or a ''non-transient non-community water system (NTNCWS).''

Non-transient non-community water system or *NTNCWS* means a public water system that is not a community water system and that regularly serves at least 25 of the same persons over 6 months per year.

Optimal corrosion control treatment, for the purpose of subpart I of this part only, means the corrosion control treatment that minimizes the lead and copper concentrations at users' taps while insuring that the treatment does not cause the water system to violate any national primary drinking water regulations.

Performance evaluation sample means a reference sample provided to a laboratory for the purpose of demonstrating that the laboratory can successfully analyze the sample within limits of performance specified by the Agency. The true value of the concentration of the reference material is unknown to the laboratory at the time of the analysis.

Person means an individual; corporation; company; association; partnership; municipality; or State, Federal, or tribal agency.

Picocurie (pCi) means the quantity of radioactive material producing 2.22 nuclear transformations per minute.

Plant intake refers to the works or structures at the head of a conduit through which water is diverted from a source (e.g., river or lake) into the treatment plant.

Point of disinfectant application is the point where the disinfectant is applied and water downstream of that point is not subject to recontamination by surface water runoff.

Point-of-entry treatment device (POE) is a treatment device applied to the drinking water entering a house or building for the purpose of reducing contaminants in the drinking water distributed throughout the house or building.

Point-of-use treatment device (POU) is a treatment device applied to a single tap used for the purpose of reducing contaminants in drinking water at that one tap.

Presedimentation is a preliminary treatment process used to remove gravel, sand and other particulate material from the source water through settling before the water enters the primary clarification and filtration processes in a treatment plant.

Public water system means a system for the provision to the public of water for human consumption through pipes or, after August 5, 1998, other constructed conveyances, if such system has at least fifteen service connections or regularly serves an average of at least twenty-five individuals daily at least 60 days out of the year. Such term includes: any collection, treatment, storage, and distribution facilities under control of the operator of such system and used primarily in connection with such system; and any collection or pretreatment storage facilities not under such control which are used primarily in connection with such system. Such term does not include any ''special irrigation district.'' A public water system is either a ''community water system'' or a ''noncommunity water system.''

Rem means the unit of dose equivalent from ionizing radiation to the total body or any internal organ or organ system. A ''millirem (mrem)'' is $1/1000$ of a rem.

Repeat compliance period means any subsequent compliance period after the initial compliance period.

Residual disinfectant concentration (''C'' in CT calculations) means the concentration of disinfectant measured in mg/l in a representative sample of water.

Sanitary defect is a defect that could provide a pathway of entry for microbial contamination into the distribution system or that is indicative of a failure or imminent failure in a barrier that is already in place.

Sanitary survey means an onsite review of the water source, facilities, equipment, operation and maintenance of a public water system for the purpose of evaluating the adequacy of such source, facilities, equipment, operation and maintenance for producing and distributing safe drinking water.

Seasonal system is a non-community water system that is not operated as a public water system on a year-round basis and starts up and shuts down at the beginning and end of each operating season.

Sedimentation means a process for removal of solids before filtration by gravity or separation.

Service connection, as used in the definition of *public water system*, does not include a connection to a system that delivers water by a constructed conveyance other than a pipe if:

(1) The water is used exclusively for purposes other than residential uses (consisting of drinking, bathing, and cooking, or other similar uses);

(2) The State determines that alternative water to achieve the equivalent level of public health protection provided by the applicable national primary drinking water regulation is provided for residential or similar uses for drinking and cooking; or

(3) The State determines that the water provided for residential or similar uses for drinking, cooking, and bathing is centrally treated or treated at the point of entry by the provider, a pass-through entity, or the user to achieve the equivalent level of protection provided by the applicable national primary drinking water regulations.

Service line sample means a one-liter sample of water collected in accordance with §141.86(b)(3), that has been standing for at least 6 hours in a service line.

Single family structure, for the purpose of subpart I of this part only, means a building constructed as a single-family residence that is currently used as either a residence or a place of business.

Slow sand filtration means a process involving passage of raw water through a bed of sand at low velocity (generally less than 0.4 m/h) resulting in substantial particulate removal by physical and biological mechanisms.

Small water system, for the purpose of subpart I of this part only, means a water system that serves 3,300 persons or fewer.

Special irrigation district means an irrigation district in existence prior to May 18, 1994 that provides primarily agricultural service through a piped water system with only incidental residential or similar use where the system or the residential or similar users of the system comply with the exclusion provisions in section 1401(4)(B)(i)(II) or (III).

Standard sample means the aliquot of finished drinking water that is examined for the presence of coliform bacteria.

State means the agency of the State or Tribal government which has jurisdiction over public water systems. During any period when a State or Tribal government does not have primary enforcement responsibility pursuant to section 1413 of the Act, the term ''State'' means the Regional Administrator, U.S. Environmental Protection Agency.

Subpart H systems means public water systems using surface water or ground water under the direct influence of surface water as a source that are subject to the requirements of subpart H of this part.

Supplier of water means any person who owns or operates a public water system.

Surface water means all water which is open to the atmosphere and subject to surface runoff.

SUVA means Specific Ultraviolet Absorption at 254 nanometers (nm), an indicator of the humic content of water. It is a calculated parameter obtained by dividing a sample's ultraviolet absorption at a wavelength of 254 nm (UV_{254}) (in m^{-1}) by its concentration of dissolved organic carbon (DOC) (in mg/L).

System with a single service connection means a system which supplies drinking water to consumers via a single service line.

Too numerous to count means that the total number of bacterial colonies exceeds 200 on a 47-mm diameter membrane filter used for coliform detection.

Total Organic Carbon (TOC) means total organic carbon in mg/L measured using heat, oxygen, ultraviolet irradiation, chemical oxidants, or combinations of these oxidants that convert organic carbon to carbon dioxide, rounded to two significant figures.

Total trihalomethanes (TTHM) means the sum of the concentration in milligrams per liter of the trihalomethane compounds (trichloromethane [chloroform], dibromochloromethane, bromodichloromethane and tribromomethane [bromoform]), rounded to two significant figures.

Transient non-community water system or *TWS* means a non-community water system that does not regularly serve at least 25 of the same persons over six months per year.

Trihalomethane (THM) means one of the family of organic compounds, named as derivatives of methane, wherein three of the four hydrogen atoms in methane are each substituted by a halogen atom in the molecular structure.

Two-stage lime softening is a process in which chemical addition and hardness precipitation occur in each of two distinct unit clarification processes in series prior to filtration.

Uncovered finished water storage facility is a tank, reservoir, or other facility used to store water that will undergo no further treatment to reduce microbial pathogens except residual disinfection and is directly open to the atmosphere.

Virus means a virus of fecal origin which is infectious to humans by waterborne transmission.

Waterborne disease outbreak means the significant occurrence of acute infectious illness, epidemiologically associated with the ingestion of water from a public water system which is deficient in treatment, as determined by the appropriate local or State agency.

Wholesale system is a public water system that treats source water as necessary to produce finished water and then delivers some or all of that finished water to another public water

system. Delivery may be through a direct connection or through the distribution system of one or more consecutive systems.

[40 FR 59570, Dec. 24, 1975]

EDITORIAL NOTE: For FEDERAL REGISTER citations affecting § 141.2, see the List of CFR Sections Affected, which appears in the Finding Aids section of the printed volume and at *www.govinfo.gov*.

§ 141.3 Coverage.

This part shall apply to each public water system, unless the public water system meets all of the following conditions:

(a) Consists only of distribution and storage facilities (and does not have any collection and treatment facilities);

(b) Obtains all of its water from, but is not owned or operated by, a public water system to which such regulations apply:

(c) Does not sell water to any person; and

(d) Is not a carrier which conveys passengers in interstate commerce.

§ 141.4 Variances and exemptions.

(a) Variances or exemptions from certain provisions of these regulations may be granted pursuant to sections 1415 and 1416 of the Act and subpart K of part 142 of this chapter (for small system variances) by the entity with primary enforcement responsibility, except that variances or exemptions from the MCLs for total coliforms and *E. coli* and variances from any of the treatment technique requirements of subpart H of this part may not be granted.

(b) EPA has stayed the effective date of this section relating to the total coliform MCL of § 141.63(a) for systems that demonstrate to the State that the violation of the total coliform MCL is due to a persistent growth of total coliforms in the distribution system rather than fecal or pathogenic contamination, a treatment lapse or deficiency, or a problem in the operation or maintenance of the distribution system. This is stayed until March 31, 2016, at which time the total coliform MCL is no longer effective.

NOTE TO PARAGRAPH (a): As provided in § 142.304(a), small system variances are not available for rules addressing microbial contaminants, which would include subparts H, P, S, T, W, and Y of this part.

[78 FR 10346, Feb. 13, 2013]

§ 141.5 Siting requirements.

Before a person may enter into a financial commitment for or initiate construction of a new public water system or increase the capacity of an existing public water system, he shall notify the State and, to the extent practicable, avoid locating part or all of the new or expanded facility at a site which:

(a) Is subject to a significant risk from earthquakes, floods, fires or other disasters which could cause a breakdown of the public water system or a portion thereof; or

(b) Except for intake structures, is within the floodplain of a 100–year flood or is lower than any recorded high tide where appropriate records exist. The U.S. Environmental Protection Agency will not seek to override land use decisions affecting public water systems siting which are made at the State or local government levels.

§ 141.6 Effective dates.

(a) Except as provided in paragraphs (b) through (k) of this section, and in § 141.80(a)(2), the regulations set forth in this part shall take effect on June 24, 1977.

(b) The regulations for total trihalomethanes set forth in § 141.12(c) shall take effect 2 years after the date of promulgation of these regulations for community water systems serving 75,000 or more individuals, and 4 years after the date of promulgation for communities serving 10,000 to 74,999 individuals.

(c) The regulations set forth in §§ 141.11(d); 141.21(a), (c) and (i); 141.22(a) and (e); 141.23(a)(3) and (a)(4); 141.23(f); 141.24(e) and (f); 141.25(e); 141.27(a); 141.28(a) and (b); 141.31(a), (d) and (e); 141.32(b)(3); and 141.32(d) shall take effect immediately upon promulgation.

(d) The regulations set forth in § 141.41 shall take effect 18 months from the date of promulgation. Suppliers

must complete the first round of sampling and reporting within 12 months following the effective date.

(e) The regulations set forth in § 141.42 shall take effect 18 months from the date of promulgation. All requirements in § 141.42 must be completed within 12 months following the effective date.

(f) The regulations set forth in § 141.11(c) and § 141.23(g) are effective May 2, 1986. Section 141.23(g)(4) is effective October 2, 1987.

(g) The regulations contained in § 141.6, paragraph (c) of the table in 141.12, and 141.62(b)(1) are effective July 1, 1991. The regulations contained in §§ 141.11(b), 141.23, 141.24, 142.57(b), 143.4(b)(12) and (b)(13), are effective July 30, 1992. The regulations contained in the revisions to §§ 141.32(e) (16), (25) through (27) and (46); 141.61(c)(16); and 141.62(b)(3) are effective January 1, 1993. The effective date of regulations contained in § 141.61(c) (2), (3), and (4) is postponed.

(h) Regulations for the analytic methods listed at § 141.23(k)(4) for measuring antimony, beryllium, cyanide, nickel, and thallium are effective August 17, 1992. Regulations for the analytic methods listed at § 141.24(f)(16) for dichloromethane, 1,2,4-trichlorobenzene, and 1,1,2-trichloroethane are effective August 17, 1992. Regulations for the analytic methods listed at § 141.24(h)(12) for measuring dalapon, dinoseb, diquat, endothall, endrin, glyphosate, oxamyl, picloram, simazine, benzo(a)pyrene, di(2-ethylhexyl)adipate, di(2-ethylhexyl)phthalate, hexachlorobenzene, hexachlorocyclopentadiene, and 2,3,7,8-TCDD are effective August 17, 1992. The revision to § 141.12(a) promulgated on July 17, 1992 is effective on August 17, 1992.

(i) [Reserved]

(j) The arsenic maximum contaminant levels (MCL) listed in § 141.62 is effective for the purpose of compliance on January 23, 2006. Requirements relating to arsenic set forth in §§ 141.23(i)(4), 141.23(k)(3) introductory text, 141.23(k)(3)(ii), 141.51(b), 141.62(b), 141.62(b)(16), 141.62(c), 141.62(d), and 142.62(b) revisions in Appendix A of subpart O for the consumer confidence rule, and Appendices A and B of subpart Q for the public notification rule are effective for the purpose of compliance on January 23, 2006. However, the consumer confidence rule reporting requirements relating to arsenic listed in § 141.154(b) and (f) are effective for the purpose of compliance on February 22, 2002.

(k) Regulations set forth in §§ 141.23(i)(1), 141.23(i)(2), 141.24(f)(15), 141.24(f)(22), 141.24(h)(11), 141.24(h)(20), 142.16(e), 142.16(j), and 142.16(k) are effective for the purpose of compliance on January 22, 2004.

[44 FR 68641, Nov. 29, 1979, as amended at 45 FR 57342, Aug. 27, 1980; 47 FR 10998, Mar. 12, 1982; 51 FR 11410, Apr. 2, 1986; 56 FR 30274, July 1, 1991; 57 FR 22178, May 27, 1992; 57 FR 31838, July 17, 1992; 59 FR 34322, July 1, 1994; 61 FR 24368, May 14, 1996; 66 FR 7061, Jan. 22, 2001; 66 FR 28350, May 22, 2001]

Subpart B—Maximum Contaminant Levels

§ 141.11 Maximum contaminant levels for inorganic chemicals.

(a) The maximum contaminant level for arsenic applies only to community water systems. The analyses and determination of compliance with the 0.05 milligrams per liter maximum contaminant level for arsenic use the requirements of § 141.23.

(b) The maximum contaminant level for arsenic is 0.05 milligrams per liter for community water systems until January 23, 2006.

(c) [Reserved]

(d) At the discretion of the State, nitrate levels not to exceed 20 mg/l may be allowed in a non-community water system if the supplier of water demonstrates to the satisfaction of the State that:

(1) Such water will not be available to children under 6 months of age; and

(2) The non-community water system is meeting the public notification requirements under § 141.209, including continuous posting of the fact that nitrate levels exceed 10 mg/l and the potential health effects of exposure; and

(3) Local and State public health authorities will be notified annually of nitrate levels that exceed 10 mg/l; and

(4) No adverse health effects shall result.

[40 FR 59570, Dec. 24, 1975, as amended at 45 FR 57342, Aug. 27, 1980; 47 FR 10998, Mar. 12, 1982; 51 FR 11410, Apr. 2, 1986; 56 FR 3578, Jan. 30, 1991; 56 FR 26548, June 7, 1991; 56 FR 30274, July 1, 1991; 56 FR 32113, July 15, 1991; 60 FR 33932, June 29, 1995; 65 FR 26022, May 4, 2000; 66 FR 7061, Jan. 22, 2001]

§ 141.12 [Reserved]

§ 141.13 Maximum contaminant levels for turbidity.

The maximum contaminant levels for turbidity are applicable to both community water systems and non-community water systems using surface water sources in whole or in part. The maximum contaminant levels for turbidity in drinking water, measured at a representative entry point(s) to the distribution system, are:

(a) One turbidity unit (TU), as determined by a monthly average pursuant to § 141.22, except that five or fewer turbidity units may be allowed if the supplier of water can demonstrate to the State that the higher turbidity does not do any of the following:

(1) Interfere with disinfection;

(2) Prevent maintenance of an effective disinfectant agent throughout the distribution system; or

(3) Interfere with microbiological determinations.

(b) Five turbidity units based on an average for two consecutive days pursuant to § 141.22.

[40 FR 59570, Dec. 24, 1975]

EDITORIAL NOTE: At 54 FR 27527, June 29, 1989, § 141.13 was amended by adding introductory text; however, the amendment could not be incorporated because introductory text already exists.

Subpart C—Monitoring and Analytical Requirements

§ 141.21 Coliform sampling.

(a) *Routine monitoring.* (1) Public water systems must collect total coliform samples at sites which are representative of water throughout the distribution system according to a written sample siting plan. These plans are subject to State review and revision.

(2) The monitoring frequency for total coliforms for community water systems is based on the population served by the system, as follows:

TOTAL COLIFORM MONITORING FREQUENCY FOR COMMUNITY WATER SYSTEMS

Population served	Minimum number of samples per month
25 to 1,000 [1]	1
1,001 to 2,500	2
2,501 to 3,300	3
3,301 to 4,100	4
4,101 to 4,900	5
4,901 to 5,800	6
5,801 to 6,700	7
6,701 to 7,600	8
7,601 to 8,500	9
8,501 to 12,900	10
12,901 to 17,200	15
17,201 to 21,500	20
21,501 to 25,000	25
25,001 to 33,000	30
33,001 to 41,000	40
41,001 to 50,000	50
50,001 to 59,000	60
59,001 to 70,000	70
70,001 to 83,000	80
83,001 to 96,000	90
96,001 to 130,000	100
130,001 to 220,000	120
220,001 to 320,000	150
320,001 to 450,000	180
450,001 to 600,000	210
600,001 to 780,000	240
780,001 to 970,000	270
970,001 to 1,230,000	300
1,230,001 to 1,520,000	330
1,520,001 to 1,850,000	360
1,850,001 to 2,270,000	390
2,270,001 to 3,020,000	420
3,020,001 to 3,960,000	450
3,960,001 or more	480

[1] Includes public water systems which have at least 15 service connections, but serve fewer than 25 persons.

If a community water system serving 25 to 1,000 persons has no history of total coliform contamination in its current configuration and a sanitary survey conducted in the past five years shows that the system is supplied solely by a protected groundwater source and is free of sanitary defects, the State may reduce the monitoring frequency specified above, except that in no case may the State reduce the monitoring frequency to less than one sample per quarter. The State must approve the reduced monitoring frequency in writing.

(3) The monitoring frequency for total coliforms for non-community water systems is as follows:

(i) A non-community water system using only ground water (except ground water under the direct influence of surface water, as defined in §141.2) and serving 1,000 persons or fewer must monitor each calendar quarter that the system provides water to the public, except that the State may reduce this monitoring frequency, in writing, if a sanitary survey shows that the system is free of sanitary defects. Beginning June 29, 1994, the State cannot reduce the monitoring frequency for a non-community water system using only ground water (except ground water under the direct influence of surface water, as defined in §141.2) and serving 1,000 persons or fewer to less than once/year.

(ii) A non-community water system using only ground water (except ground water under the direct influence of surface water, as defined in §141.2) and serving more than 1,000 persons during any month must monitor at the same frequency as a like-sized community water system, as specified in paragraph (a)(2) of this section, except the State may reduce this monitoring frequency, in writing, for any month the system serves 1,000 persons or fewer. The State cannot reduce the monitoring frequency to less than once/year. For systems using ground water under the direct influence of surface water, paragraph (a)(3)(iv) of this section applies.

(iii) A non-community water system using surface water, in total or in part, must monitor at the same frequency as a like-sized community water system, as specified in paragraph (a)(2) of this section, regardless of the number of persons it serves.

(iv) A non-community water system using ground water under the direct influence of surface water, as defined in §141.2, must monitor at the same frequency as a like-sized community water system, as specified in paragraph (a)(2) of this section. The system must begin monitoring at this frequency beginning six months after the State determines that the ground water is under the direct influence of surface water.

(4) The public water system must collect samples at regular time intervals throughout the month, except that a system which uses only ground water (except ground water under the direct influence of surface water, as defined in §141.2), and serves 4,900 persons or fewer, may collect all required samples on a single day if they are taken from different sites.

(5) A public water system that uses surface water or ground water under the direct influence of surface water, as defined in §141.2, and does not practice filtration in compliance with Subpart H must collect at least one sample near the first service connection each day the turbidity level of the source water, measured as specified in §141.74(b)(2), exceeds 1 NTU. This sample must be analyzed for the presence of total coliforms. When one or more turbidity measurements in any day exceed 1 NTU, the system must collect this coliform sample within 24 hours of the first exceedance, unless the State determines that the system, for logistical reasons outside the system's control, cannot have the sample analyzed within 30 hours of collection. Sample results from this coliform monitoring must be included in determining compliance with the MCL for total coliforms in §141.63.

(6) Special purpose samples, such as those taken to determine whether disinfection practices are sufficient following pipe placement, replacement, or repair, shall not be used to determine compliance with the MCL for total coliforms in §141.63. Repeat samples taken pursuant to paragraph (b) of this section are not considered special purpose samples, and must be used to determine compliance with the MCL for total coliforms in §141.63.

(b) *Repeat monitoring.* (1) If a routine sample is total coliform-positive, the public water system must collect a set of repeat samples within 24 hours of being notified of the positive result. A system which collects more than one routine sample/month must collect no fewer than three repeat samples for each total coliform-positive sample found. A system which collects one routine sample/month or fewer must collect no fewer than four repeat samples for each total coliform-positive sample found. The State may extend the 24-hour limit on a case-by-case basis if the system has a logistical

problem in collecting the repeat samples within 24 hours that is beyond its control. In the case of an extension, the State must specify how much time the system has to collect the repeat samples.

(2) The system must collect at least one repeat sample from the sampling tap where the original total coliform-positive sample was taken, and at least one repeat sample at a tap within five service connections upstream and at least one repeat sample at a tap within five service connections downstream of the original sampling site. If a total coliform-positive sample is at the end of the distribution system, or one away from the end of the distribution system, the State may waive the requirement to collect at least one repeat sample upstream or downstream of the original sampling site.

(3) The system must collect all repeat samples on the same day, except that the State may allow a system with a single service connection to collect the required set of repeat samples over a four-day period or to collect a larger volume repeat sample(s) in one or more sample containers of any size, as long as the total volume collected is at least 400 ml (300 ml for systems which collect more than one routine sample/month).

(4) If one or more repeat samples in the set is total coliform-positive, the public water system must collect an additional set of repeat samples in the manner specified in paragraphs (b) (1)–(3) of this section. The additional samples must be collected within 24 hours of being notified of the positive result, unless the State extends the limit as provided in paragraph (b)(1) of this section. The system must repeat this process until either total coliforms are not detected in one complete set of repeat samples or the system determines that the MCL for total coliforms in §141.63 has been exceeded and notifies the State.

(5) If a system collecting fewer than five routine samples/month has one or more total coliform-positive samples and the State does not invalidate the sample(s) under paragraph (c) of this section, it must collect at least five routine samples during the next month the system provides water to the public, except that the State may waive this requirement if the conditions of paragraph (b)(5) (i) or (ii) of this section are met. The State cannot waive the requirement for a system to collect repeat samples in paragraphs (b) (1)–(4) of this section.

(i) The State may waive the requirement to collect five routine samples the next month the system provides water to the public if the State, or an agent approved by the State, performs a site visit before the end of the next month the system provides water to the public. Although a sanitary survey need not be performed, the site visit must be sufficiently detailed to allow the State to determine whether additional monitoring and/or any corrective action is needed. The State cannot approve an employee of the system to perform this site visit, even if the employee is an agent approved by the State to perform sanitary surveys.

(ii) The State may waive the requirement to collect five routine samples the next month the system provides water to the public if the State has determined why the sample was total coliform-positive and establishes that the system has corrected the problem or will correct the problem before the end of the next month the system serves water to the public. In this case, the State must document this decision to waive the following month's additional monitoring requirement in writing, have it approved and signed by the supervisor of the State official who recommends such a decision, and make this document available to the EPA and public. The written documentation must describe the specific cause of the total coliform-positive sample and what action the system has taken and/or will take to correct this problem. The State cannot waive the requirement to collect five routine samples the next month the system provides water to the public solely on the grounds that all repeat samples are total coliform-negative. Under this paragraph, a system must still take at least one routine sample before the end of the next month it serves water to the public and use it to determine compliance with the MCL for total coliforms in §141.63, unless the State has

determined that the system has corrected the contamination problem before the system took the set of repeat samples required in paragraphs (b) (1)–(4) of this section, and all repeat samples were total coliform-negative.

(6) After a system collects a routine sample and before it learns the results of the analysis of that sample, if it collects another routine sample(s) from within five adjacent service connections of the initial sample, and the initial sample, after analysis, is found to contain total coliforms, then the system may count the subsequent sample(s) as a repeat sample instead of as a routine sample.

(7) Results of all routine and repeat samples not invalidated by the State must be included in determining compliance with the MCL for total coliforms in § 141.63.

(c) *Invalidation of total coliform samples.* A total coliform-positive sample invalidated under this paragraph (c) does not count towards meeting the minimum monitoring requirements of this section.

(1) The State may invalidate a total coliform-positive sample only if the conditions of paragraph (c)(1) (i), (ii), or (iii) of this section are met.

(i) The laboratory establishes that improper sample analysis caused the total coliform-positive result.

(ii) The State, on the basis of the results of repeat samples collected as required by paragraphs (b) (1) through (4) of this section, determines that the total coliform-positive sample resulted from a domestic or other non-distribution system plumbing problem. The State cannot invalidate a sample on the basis of repeat sample results unless all repeat sample(s) collected at the same tap as the original total coliform-positive sample are also total coliform-positive, and all repeat samples collected within five service connections of the original tap are total coliform-negative (e.g., a State cannot invalidate a total coliform-positive sample on the basis of repeat samples if all the repeat samples are total coliform-negative, or if the public water system has only one service connection).

(iii) The State has substantial grounds to believe that a total coliform-positive result is due to a circumstance or condition which does not reflect water quality in the distribution system. In this case, the system must still collect all repeat samples required under paragraphs (b) (1)–(4) of this section, and use them to determine compliance with the MCL for total coliforms in § 141.63. To invalidate a total coliform-positive sample under this paragraph, the decision with the rationale for the decision must be documented in writing, and approved and signed by the supervisor of the State official who recommended the decision. The State must make this document available to EPA and the public. The written documentation must state the specific cause of the total coliform-positive sample, and what action the system has taken, or will take, to correct this problem. The State may not invalidate a total coliform-positive sample solely on the grounds that all repeat samples are total coliform-negative.

(2) A laboratory must invalidate a total coliform sample (unless total coliforms are detected) if the sample produces a turbid culture in the absence of gas production using an analytical method where gas formation is examined (e.g., the Multiple-Tube Fermentation Technique), produces a turbid culture in the absence of an acid reaction in the Presence-Absence (P-A) Coliform Test, or exhibits confluent growth or produces colonies too numerous to count with an analytical method using a membrane filter (e.g., Membrane Filter Technique). If a laboratory invalidates a sample because of such interference, the system must collect another sample from the same location as the original sample within 24 hours of being notified of the interference problem, and have it analyzed for the presence of total coliforms. The system must continue to re-sample within 24 hours and have the samples analyzed until it obtains a valid result. The State may waive the 24-hour time limit on a case-by-case basis.

(d) *Sanitary surveys.* (1)(i) Public water systems which do not collect five or more routine samples/month must undergo an initial sanitary survey by June 29, 1994, for community public water systems and June 29, 1999, for

non-community water systems. Thereafter, systems must undergo another sanitary survey every five years, except that non-community water systems using only protected and disinfected ground water, as defined by the State, must undergo subsequent sanitary surveys at least every ten years after the initial sanitary survey. The State must review the results of each sanitary survey to determine whether the existing monitoring frequency is adequate and what additional measures, if any, the system needs to undertake to improve drinking water quality.

(ii) In conducting a sanitary survey of a system using ground water in a State having an EPA-approved wellhead protection program under section 1428 of the Safe Drinking Water Act, information on sources of contamination within the delineated wellhead protection area that was collected in the course of developing and implementing the program should be considered instead of collecting new information, if the information was collected since the last time the system was subject to a sanitary survey.

(2) Sanitary surveys must be performed by the State or an agent approved by the State. The system is responsible for ensuring the survey takes place.

(3) Sanitary surveys conducted by the State under the provisions of § 142.16(o)(2) of this chapter may be used to meet the sanitary survey requirements of this section.

(e) *Fecal coliforms/Escherichia coli (E. coli) testing*. (1) If any routine or repeat sample is total coliform-positive, the system must analyze that total coliform-positive culture medium to determine if fecal coliforms are present, except that the system may test for *E. coli* in lieu of fecal coliforms. If fecal coliforms or *E. coli* are present, the system must notify the State by the end of the day when the system is notified of the test result, unless the system is notified of the result after the State office is closed, in which case the system must notify the State before the end of the next business day.

(2) The State has the discretion to allow a public water system, on a case-by-case basis, to forgo fecal coliform or *E. coli* testing on a total coliform-positive sample if that system assumes that the total coliform-positive sample is fecal coliform-positive or *E. coli*-positive. Accordingly, the system must notify the State as specified in paragraph (e)(1) of this section and the provisions of § 141.63(b) apply.

(f) *Analytical methodology*. (1) The standard sample volume required for total coliform analysis, regardless of analytical method used, is 100 ml.

(2) Public water systems need only determine the presence or absence of total coliforms; a determination of total coliform density is not required.

(3) Public water systems must conduct total coliform analyses in accordance with one of the analytical methods in the following table or one of the alternative methods listed in appendix A to subpart C of this part.

Organism	Methodology [12]	Citation [1]
Total Coliforms [2]	Total Coliform Fermentation Technique [3 4 5]	9221A, B.
	Total Coliform Membrane Filter Technique [6]	9222A, B, C.
	Presence-Absence (P-A) Coliform Test [5 7]	9221D.
	ONPG-MUG Test [8]	9223.
	Colisure Test. [9]	
	E*Colite® Test. [10]	
	m-ColiBlue24® Test. [11]	
	Readycult® Coliforms 100 Presence/Absence Test. [13]	
	Membrane Filter Technique using Chromocult® Coliform Agar. [14]	
	Colitag® Test. [15]	

The procedures shall be done in accordance with the documents listed below. The incorporation by reference of the following documents listed in footnotes 1, 6, 8, 9, 10 , 11, 13, 14 and 15 was approved by the Director of the Federal Register in accordance with 5 U.S.C. 552(a) and 1 CFR part 51. Copies of the documents may be obtained from the sources listed below. Information regarding obtaining these documents can be obtained from the Safe Drinking Water Hotline at 800–426–4791. Documents may be inspected at EPA's Drinking Water Docket, EPA West, 1301 Constitution Avenue, NW., EPA West, Room B102, Washington DC 20460 (Telephone: 202–566–2426); or at the National Archives and Records Administration (NARA). For information on the availability of this material at NARA, call 202–741–6030, or go to: *http://www.archives.gov/federal_register/code_of_federal_regulations/ibr_locations.html.*

[1] *Standard Methods for the Examination of Water and Wastewater,* 18th edition (1992), 19th edition (1995), or 20th edition (1998). American Public Health Association, 1015 Fifteenth Street, NW., Washington, DC 20005. The cited methods published in any of these three editions may be used. In addition, the following online versions may also be used: 9221 A, B, D–99, 9222 A, B, C–97, and 9223 B–97. Standard Methods Online are available at *http://www.standardmethods.org.* The year in which each method was approved by the Standard Methods Committee is designated by the last two digits in the method number. The methods listed are the only Online versions that may be used.

[2] The time from sample collection to initiation of analysis may not exceed 30 hours. Systems are encouraged but not required to hold samples below 10 deg. C during transit.

[3] Lactose broth, as commercially available, may be used in lieu of lauryl tryptose broth, if the system conducts at least 25 parallel tests between this medium and lauryl tryptose broth using the water normally tested, and this comparison demonstrates that the false-positive rate and false-negative rate for total coliform, using lactose broth, is less than 10 percent.

[4] If inverted tubes are used to detect gas production, the media should cover these tubes at least one-half to two-thirds after the sample is added.

[5] No requirement exists to run the completed phase on 10 percent of all total coliform-positive confirmed tubes.

[6] MI agar also may be used. Preparation and use of MI agar is set forth in the article, ''New medium for the simultaneous detection of total coliform and *Escherichia coli* in water'' by Brenner, K.P., *et. al.,* 1993, Appl. Environ. Microbiol. 59:3534–3544. Also available from the Office of Water Resource Center (RC–4100T), 1200 Pennsylvania Avenue, NW., Washington, DC 20460, EPA/600/J–99/225. Verification of colonies is not required.

[7] Six-times formulation strength may be used if the medium is filter-sterilized rather than autoclaved.

[8] The ONPG-MUG Test is also known as the Autoanalysis Collect System.

[9] A description of the Colisure Test, Feb 28, 1994, may be obtained from IDEXX Laboratories, Inc., One IDEXX Drive, Westbrook, Maine 04092. The Colisure Test may be read after an incubation time of 24 hours.

[10] A description of the E*Colite® Test, ''Presence/Absence for Coliforms and *E. Coli* in Water,'' Dec 21, 1997, is available from Charm Sciences, Inc., 36 Franklin Street, Malden, MA 02148–4120.

[11] A description of the m-ColiBlue24® Test, Aug 17, 1999, is available from the Hach Company, 100 Dayton Avenue, Ames, IA 50010.

[12] EPA strongly recommends that laboratories evaluate the false-positive and negative rates for the method(s) they use for monitoring total coliforms. EPA also encourages laboratories to establish false-positive and false-negative rates within their own laboratory and sample matrix (drinking water or source water) with the intent that if the method they choose has an unacceptable false-positive or negative rate, another method can be used. The Agency suggests that laboratories perform these studies on a minimum of 5% of all total coliform-positive samples, except for those methods where verification/confirmation is already required, e.g., the M-Endo and LES Endo Membrane Filter Tests, Standard Total Coliform Fermentation Technique, and Presence-Absence Coliform Test. Methods for establishing false-positive and negative-rates may be based on lactose fermentation, the rapid test for β-galactosidase and cytochrome oxidase, multi-test identification systems, or equivalent confirmation tests. False-positive and false-negative information is often available in published studies and/or from the manufacturer(s).

[13] The Readycult® Coliforms 100 Presence/Absence Test is described in the document, ''Readycult® Coliforms 100 Presence/Absence Test for Detection and Identification of Coliform Bacteria and *Escherichla coli* in Finished Waters'', November 2000, Version 1.0, available from EM Science (an affiliate of Merck KGgA, Darmstadt Germany), 480 S. Democrat Road, Gibbstown, NJ 08027–1297. Telephone number is (800) 222–0342, e-mail address is: *adellenbusch@emscience.com.*

[14] Membrane Filter Technique using Chromocult® Coliform Agar is described in the document, ''Chromocult® Coliform Agar Presence/Absence Membrane Filter Test Method for Detection and Identification of Coliform Bacteria and *Escherichla coli* in Finished Waters'', November 2000, Version 1.0, available from EM Science (an affiliate of Merck KGgA, Darmstadt Germany), 480 S. Democrat Road, Gibbstown, NJ 08027–1297. Telephone number is (800) 222–0342, e-mail address is: *adellenbusch@emscience.com.*

[15] Colitag® product for the determination of the presence/absence of total coliforms and *E. coli* is described in ''Colitag® Product as a Test for Detection and Identification of Coliforms and *E. coli* Bacteria in Drinking Water and Source Water as Required in National Primary Drinking Water Regulations,'' August 2001, available from CPI International, Inc., 5580 Skylane Blvd., Santa Rosa, CA, 95403, telephone (800) 878–7654, Fax (707) 545–7901, Internet address *http://www.cpiinternational.com.*

(4) [Reserved]

(5) Public water systems must conduct fecal coliform analysis in accordance with the following procedure. When the MTF Technique or Presence-Absence (PA) Coliform Test is used to test for total coliforms, shake the lactose-positive presumptive tube or P-A vigorously and transfer the growth with a sterile 3-mm loop or sterile applicator stick into brilliant green lactose bile broth and EC medium to determine the presence of total and fecal coliforms, respectively. For EPA-approved analytical methods which use a membrane filter, transfer the total coliform-positive culture by one of the following methods: remove the membrane containing the total coliform colonies from the substrate with a sterile forceps and carefully curl and insert the membrane into a tube of EC medium (the laboratory may first remove a small portion of selected colonies for verification), swab the entire membrane filter surface with a sterile cotton swab and transfer the inoculum to EC medium (do not leave the cotton swab in the EC medium), or inoculate individual total coliform-positive colonies into EC Medium. Gently shake the inoculated tubes of EC medium to insure adequate mixing and incubate in a waterbath at 44.5 ±0.2 °C for 24 ±2 hours. Gas production of any amount in the inner fermentation tube of the EC medium indicates a positive fecal coliform test. The preparation of EC medium is described in Method 9221E (paragraph 1a) in Standard Methods for the Examination of Water and Wastewater, 18th edition (1992), 19th edition (1995), and 20th edition (1998); the cited method in any one of these three editions may be used. Public water systems need only determine the presence or absence of fecal coliforms; a determination of fecal coliform density is not required.

(6) Public water systems must conduct analysis of Escherichia coli in accordance with one of the following analytical methods or one of the alternative methods listed in appendix A to subpart C of this part.

(i) EC medium supplemented with 50 μg/mL of 4-methylumbelliferyl-beta-D-glucuronide (MUG) (final concentration), as described in Method 9222G in Standard Methods for the Examination of Water and Wastewater, 19th edition (1995) and 20th edition (1998). Either edition may be used. Alternatively, the 18th edition (1992) may be used if at least 10 mL of EC medium, as described in paragraph (f)(5) of this section, is supplemented with 50 μg/mL of MUG before autoclaving. The inner inverted fermentation tube may be omitted. If the 18th edition is used, apply the procedure in paragraph (f)(5) of this section for transferring a total coliform-positive culture to EC medium supplemented with MUG, incubate the tube at 44.5 ±0.2 °C for 24 ±2 hours, and then observe fluorescence with an ultraviolet light (366 nm) in the dark. If fluorescence is visible, E. coli are present.

(ii) Nutrient agar supplemented with 100 μg/mL of 4-methylumbelliferyl-beta-D-glucuronide (MUG) (final concentration), as described in Method 9222G in Standard Methods for the Examination of Water and Wastewater, 19th edition (1995) and 20th edition (1998). Either edition may be used for determining if a total coliform-positive sample, as determined by a membrane filter technique, contains E. coli. Alternatively, the 18th edition (1992) may be used if the membrane filter containing a total coliform-positive colony(ies) is transferred to nutrient agar, as described in Method 9221B (paragraph 3) of Standard Methods (18th edition), supplemented with 100 μg/mL of MUG. If the 18th edition is used, incubate the agar plate at 35 °C for 4 hours and then observe the colony(ies) under ultraviolet light (366 nm) in the dark for fluorescence. If fluorescence is visible, E. coli are present.

(iii) Minimal Medium ONPG-MUG (MMO-MUG) Test, as set forth in the article ''National Field Evaluation of a Defined Substrate Method for the Simultaneous Detection of Total Coliforms and *Escherichia coli* from Drinking Water: Comparison with Presence-Absence Techniques'' (Edberg et al.), Applied and Environmental Microbiology, Volume 55, pp. 1003–1008, April 1989. (Note: The Autoanalysis Colilert System is an MMO-MUG test). If the MMO-MUG test is total coliform-positive after a 24-hour incubation, test the medium for fluorescence with a 366-nm ultraviolet light (preferably with a 6-watt lamp) in the dark. If fluorescence is observed, the sample is *E. coli*-positive. If fluorescence is questionable (cannot be definitively read) after 24 hours incubation, incubate the culture for an additional four hours (but not to exceed 28 hours total), and again test the medium for fluorescence. The MMO-MUG Test with hepes buffer in lieu of phosphate buffer is the only approved formulation for the detection of *E. coli*.

(iv) *The Colisure Test*. A description of the Colisure Test may be obtained from the Millipore Corporation, Technical Services Department, 80 Ashby Road, Bedford, MA 01730.

(v) The membrane filter method with MI agar, a description of which is cited in footnote 6 to the table in paragraph (f)(3) of this section.

(vi) E*Colite® Test, a description of which is cited in footnote 10 to the table at paragraph (f)(3) of this section.

(vii) m-ColiBlue24® Test, a description of which is cited in footnote 11 to the table in paragraph (f)(3) of this section.

(viii) Readycult® Coliforms 100 Presence/Absence Test, a description of which is cited in footnote 13 to the table at paragraph (f)(3) of this section.

(ix) Membrane Filter Technique using Chromocult® Coliform Agar, a description of which is cited in footnote 14 to the table at paragraph (f)(3) of this section.

(x) Colitag®, a description of which is cited in footnote 15 to the table at paragraph (f)(3) of this section.

(7) As an option to paragraph (f)(6)(iii) of this section, a system with a total coliform-positive, MUG-negative, MMO-MUG test may further analyze the culture for the presence of *E. coli* by transferring a 0.1 ml, 28-hour MMO-MUG culture to EC Medium + MUG with a pipet. The formulation and incubation conditions of EC Medium +

MUG, and observation of the results are described in paragraph (f)(6)(i) of this section.

(8) The following materials are incorporated by reference in this section with the approval of the Director of the Federal Register in accordance with 5 U.S.C. 552(a) and 1 CFR part 51. Copies of the analytical methods cited in Standard Methods for the Examination of Water and Wastewater (18th, 19th, and 20th editions) may be obtained from the American Public Health Association *et al.*; 1015 Fifteenth Street, NW., Washington, DC 20005–2605. Copies of the MMO-MUG Test, as set forth in the article ''National Field Evaluation of a Defined Substrate Method for the Simultaneous Enumeration of Total Coliforms and Escherichia coli from Drinking Water: Comparison with the Standard Multiple Tube Fermentation Method'' (Edberg *et al.*) may be obtained from the American Water Works Association Research Foundation, 6666 West Quincy Avenue, Denver, CO 80235. Copies of the MMO-MUG Test as set forth in the article ''National Field Evaluation of a Defined Substrate Method for the Simultaneous Enumeration of Total Coliforms and *Escherichia coli* from Drinking Water: Comparison with the Standard Multiple Tube Fermentation Method'' (Edberg *et al.*) may be obtained from the American Water Works Association Research Foundation, 6666 West Quincy Avenue, Denver, CO 80235. A description of the Colisure Test may be obtained from the Millipore Corp., Technical Services Department, 80 Ashby Road, Bedford, MA 01730. Copies may be inspected at EPA's Drinking Water Docket; 401 M St., SW.; Washington, DC 20460, or at the National Archives and Records Administration (NARA). For information on the availability of this material at NARA, call 202–741–6030, or go to: *http://www.archives.gov/federal_register/code_of_federal_regulations/ibr_locations.html.*

(g) *Response to violation.* (1) A public water system which has exceeded the MCL for total coliforms in § 141.63 must report the violation to the State no later than the end of the next business day after it learns of the violation, and notify the public in accordance with subpart Q.

(2) A public water system which has failed to comply with a coliform monitoring requirement, including the sanitary survey requirement, must report the monitoring violation to the State within ten days after the system discovers the violation, and notify the public in accordance with subpart Q.

(h) The provisions of paragraphs (a) and (d) of this section are applicable until March 31, 2016. The provisions of paragraphs (b), (c), (e), (f), and (g) of this section are applicable until all required repeat monitoring under paragraph (b) of this section and fecal coliform or *E. coli* testing under paragraph (e) of this section that was initiated by a total coliform-positive sample taken before April 1, 2016 is completed, as well as analytical method, reporting, recordkeeping, public notification, and consumer confidence report requirements associated with that monitoring and testing. Beginning April 1, 2016, the provisions of subpart Y of this part are applicable, with systems required to begin regular monitoring at the same frequency as the system-specific frequency required on March 31, 2016.

[54 FR 27562, June 29, 1989]

EDITORIAL NOTE: For FEDERAL REGISTER citations affecting § 141.21, see the List of CFR Sections Affected, which appears in the Finding Aids section of the printed volume and at *www.govinfo.gov.*

§ 141.22 Turbidity sampling and analytical requirements.

The requirements in this section apply to unfiltered systems until December 30, 1991, unless the State has determined prior to that date, in writing pursuant to section 1412(b)(7)(iii), that filtration is required. The requirements in this section apply to filtered systems until June 29, 1993. The requirements in this section apply to unfiltered systems that the State has determined, in writing pursuant to section 1412(b)(7)(C)(iii), must install filtration, until June 29, 1993, or until filtration is installed, whichever is later.

(a) Samples shall be taken by suppliers of water for both community and non-community water systems at a representative entry point(s) to the water distribution system at least once per day, for the purposes of making turbidity measurements to determine

compliance with § 141.13. If the State determines that a reduced sampling frequency in a non-community will not pose a risk to public health, it can reduce the required sampling frequency. The option of reducing the turbidity frequency shall be permitted only in those public water systems that practice disinfection and which maintain an active residual disinfectant in the distribution system, and in those cases where the State has indicated in writing that no unreasonable risk to health existed under the circumstances of this option. Turbidity measurements shall be made as directed in § 141.74(a)(1).

(b) If the result of a turbidity analysis indicates that the maximum allowable limit has been exceeded, the sampling and measurement shall be confirmed by resampling as soon as practicable and preferably within one hour. If the repeat sample confirms that the maximum allowable limit has been exceeded, the supplier of water shall report to the State within 48 hours. The repeat sample shall be the sample used for the purpose of calculating the monthly average. If the monthly average of the daily samples exceeds the maximum allowable limit, or if the average of two samples taken on consecutive days exceeds 5 TU, the supplier of water shall report to the State and notify the public as directed in § 141.31 and subpart Q.

(c) Sampling for non-community water systems shall begin within two years after the effective date of this part.

(d) The requirements of this § 141.22 shall apply only to public water systems which use water obtained in whole or in part from surface sources.

(e) The State has the authority to determine compliance or initiate enforcement action based upon analytical results or other information compiled by their sanctioned representatives and agencies.

[40 FR 59570, Dec. 24, 1975, as amended at 45 FR 57344, Aug. 27, 1980; 47 FR 8998, Mar. 3, 1982; 47 FR 10998, Mar. 12, 1982; 54 FR 27527, June 29, 1989; 59 FR 62466, Dec. 5, 1994; 65 FR 26022, May 4, 2000]

§ 141.23 Inorganic chemical sampling and analytical requirements.

Community water systems shall conduct monitoring to determine compliance with the maximum contaminant levels specified in § 141.62 in accordance with this section. Non-transient, non-community water systems shall conduct monitoring to determine compliance with the maximum contaminant levels specified in § 141.62 in accordance with this section. Transient, non-community water systems shall conduct monitoring to determine compliance with the nitrate and nitrite maximum contaminant levels in §§ 141.11 and 141.62 (as appropriate) in accordance with this section.

(a) Monitoring shall be conducted as follows:

(1) Groundwater systems shall take a minimum of one sample at every entry point to the distribution system which is representative of each well after treatment (hereafter called a sampling point) beginning in the initial compliance period. The system shall take each sample at the same sampling point unless conditions make another sampling point more representative of each source or treatment plant.

(2) Surface water systems shall take a minimum of one sample at every entry point to the distribution system after any application of treatment or in the distribution system at a point which is representative of each source after treatment (hereafter called a sampling point) beginning in the initial compliance period. The system shall take each sample at the same sampling point unless conditions make another sampling point more representative of each source or treatment plant.

NOTE: For purposes of this paragraph, surface water systems include systems with a combination of surface and ground sources.

(3) If a system draws water from more than one source and the sources are combined before distribution, the system must sample at an entry point to the distribution system during periods of normal operating conditions (*i.e.*, when water is representative of all sources being used).

(4) The State may reduce the total number of samples which must be analyzed by allowing the use of compositing. Composite samples from a maximum of five samples are allowed, provided that the detection limit of the method used for analysis is less than one-fifth of the MCL. Compositing of samples must be done in the laboratory.

(i) If the concentration in the composite sample is greater than or equal to one-fifth of the MCL of any inorganic chemical, then a follow-up sample must be taken within 14 days at each sampling point included in the composite. These samples must be analyzed for the contaminants which exceeded one-fifth of the MCL in the composite sample. Detection limits for each analytical method and MCLs for each inorganic contaminant are the following:

DETECTION LIMITS FOR INORGANIC CONTAMINANTS

Contaminant	MCL (mg/l)	Methodology	Detection limit (mg/l)
Antimony	0.006	Atomic Absorption; Furnace	0.003
		Atomic Absorption; Platform	0.0008[5]
		ICP-Mass Spectrometry	0.0004
		Hydride-Atomic Absorption	0.001
Arsenic	0.010[6]	Atomic Absorption; Furnace	0.001
		Atomic Absorption; Platform—Stabilized Temperature	0.0005[7]
		Atomic Absorption; Gaseous Hydride	0.001
		ICP-Mass Spectrometry	0.0014[8]
Asbestos	7 MFL[1]	Transmission Electron Microscopy	0.01 MFL
Barium	2	Atomic Absorption; furnace technique	0.002
		Atomic Absorption; direct aspiration	0.1
		Inductively Coupled Plasma	0.002 (0.001)
Beryllium	0.004	Atomic Absorption; Furnace	0.0002
		Atomic Absorption; Platform	0.00002[5]
		Inductively Coupled Plasma[2]	0.0003
		ICP-Mass Spectrometry	0.0003
Cadmium	0.005	Atomic Absorption; furnace technique	0.0001
		Inductively Coupled Plasma	0.001
Chromium	0.1	Atomic Absorption; furnace technique	0.001
		Inductively Coupled Plasma	0.007 (0.001)
Cyanide	0.2	Distillation, Spectrophotometric[3]	0.02
		Distillation, Automated, Spectrophotometric[3]	0.005
		Distillation, Amenable, Spectrophotometric[4]	0.02
		Distillation, Selective Electrode[3 4]	0.05
		UV, Distillation, Spectrophotometric[9]	0.0005
		Micro Distillation, Flow Injection, Spectrophotometric[3]	0.0006
		Ligand Exchange with Amperometry[4]	0.0005
Mercury	0.002	Manual Cold Vapor Technique	0.0002
		Automated Cold Vapor Technique	0.0002
Nickel	xl	Atomic Absorption; Furnace	0.001
		Atomic Absorption; Platform	0.0006[5]
		Inductively Coupled Plasma[2]	0.005
		ICP-Mass Spectrometry	0.0005
Nitrate	10 (as N)	Manual Cadmium Reduction	0.01
		Automated Hydrazine Reduction	0.01
		Automated Cadmium Reduction	0.05
		Ion Selective Electrode	1
		Ion Chromatography	0.01
		Capillary Ion Electrophoresis	0.076
Nitrite	1 (as N)	Spectrophotometric	0.01
		Automated Cadmium Reduction	0.05
		Manual Cadmium Reduction	0.01
		Ion Chromatography	0.004
		Capillary Ion Electrophoresis	0.103
Selenium	0.05	Atomic Absorption; furnace	0.002
		Atomic Absorption; gaseous hydride	0.002
Thallium	0.002	Atomic Absorption; Furnace	0.001
		Atomic Absorption; Platform	0.0007[5]
		ICP-Mass Spectrometry	0.0003

[1] MFL = million fibers per liter >10 μm.
[2] Using a 2X preconcentration step as noted in Method 200.7. Lower MDLs may be achieved when using a 4X preconcentration.
[3] Screening method for total cyanides.
[4] Measures ''free'' cyanides when distillation, digestion, or ligand exchange is omitted.
[5] Lower MDLs are reported using stabilized temperature graphite furnace atomic absorption.

[6] The value for arsenic is effective January 23, 2006. Unit then, the MCL is 0.05 mg/L.
[7] The MDL reported for EPA method 200.9 (Atomic Absorption; Platform—Stablized Temperature) was determined using a 2x concentration step during sample digestion. The MDL determined for samples analyzed using direct analyses (*i.e.*, no sample digestion) will be higher. Using multiple depositions, EPA 200.9 is capable of obtaining MDL of 0.0001 mg/L.
[8] Using selective ion monitoring, EPA Method 200.8 (ICP-MS) is capable of obtaining a MDL of 0.0001 mg/L.
[9] Measures total cyanides when UV-digestor is used, and "free" cyanides when UV-digestor is bypassed.

(ii) If the population served by the system is >3,300 persons, then compositing may only be permitted by the State at sampling points within a single system. In systems serving ≤3,300 persons, the State may permit compositing among different systems provided the 5-sample limit is maintained.

(iii) If duplicates of the original sample taken from each sampling point used in the composite sample are available, the system may use these instead of resampling. The duplicates must be analyzed and the results reported to the State within 14 days after completing analysis of the composite sample, provided the holding time of the sample is not exceeded.

(5) The frequency of monitoring for asbestos shall be in accordance with paragraph (b) of this section: the frequency of monitoring for antimony, arsenic, barium, beryllium, cadmium, chromium, cyanide, fluoride, mercury, nickel, selenium and thallium shall be in accordance with paragraph (c) of this section; the frequency of monitoring for nitrate shall be in accordance with paragraph (d) of this section; and the frequency of monitoring for nitrite shall be in accordance with paragraph (e) of this section.

(b) The frequency of monitoring conducted to determine compliance with the maximum contaminant level for asbestos specified in § 141.62(b) shall be conducted as follows:

(1) Each community and non-transient, non-community water system is required to monitor for asbestos during the first three-year compliance period of each nine-year compliance cycle beginning in the compliance period starting January 1, 1993.

(2) If the system believes it is not vulnerable to either asbestos contamination in its source water or due to corrosion of asbestos-cement pipe, or both, it may apply to the State for a waiver of the monitoring requirement in paragraph (b)(1) of this section. If the State grants the waiver, the system is not required to monitor.

(3) The State may grant a waiver based on a consideration of the following factors:

(i) Potential asbestos contamination of the water source, and

(ii) The use of asbestos-cement pipe for finished water distribution and the corrosive nature of the water.

(4) A waiver remains in effect until the completion of the three-year compliance period. Systems not receiving a waiver must monitor in accordance with the provisions of paragraph (b)(1) of this section.

(5) A system vulnerable to asbestos contamination due solely to corrosion of asbestos-cement pipe shall take one sample at a tap served by asbestos-cement pipe and under conditions where asbestos contamination is most likely to occur.

(6) A system vulnerable to asbestos contamination due solely to source water shall monitor in accordance with the provision of paragraph (a) of this section.

(7) A system vulnerable to asbestos contamination due both to its source water supply and corrosion of asbestos-cement pipe shall take one sample at a tap served by asbestos-cement pipe and under conditions where asbestos contamination is most likely to occur.

(8) A system which exceeds the maximum contaminant levels as determined in § 141.23(i) of this section shall monitor quarterly beginning in the next quarter after the violation occurred.

(9) The State may decrease the quarterly monitoring requirement to the frequency specified in paragraph (b)(1) of this section provided the State has determined that the system is reliably and consistently below the maximum contaminant level. In no case can a State make this determination unless a groundwater system takes a minimum of two quarterly samples and a surface (or combined surface/ground)

water system takes a minimum of four quarterly samples.

(10) If monitoring data collected after January 1, 1990 are generally consistent with the requirements of §141.23(b), then the State may allow systems to use that data to satisfy the monitoring requirement for the initial compliance period beginning January 1, 1993.

(c) The frequency of monitoring conducted to determine compliance with the maximum contaminant levels in §141.62 for antimony, arsenic, barium, beryllium, cadmium, chromium, cyanide, fluoride, mercury, nickel, selenium and thallium shall be as follows:

(1) Groundwater systems shall take one sample at each sampling point during each compliance period. Surface water systems (or combined surface/ground) shall take one sample annually at each sampling point.

(2) The system may apply to the State for a waiver from the monitoring frequencies specified in paragraph (c)(1) of this section. States may grant a public water system a waiver for monitoring of cyanide, provided that the State determines that the system is not vulnerable due to lack of any industrial source of cyanide.

(3) A condition of the waiver shall require that a system shall take a minimum of one sample while the waiver is effective. The term during which the waiver is effective shall not exceed one compliance cycle (*i.e.*, nine years).

(4) The State may grant a waiver provided surface water systems have monitored annually for at least three years and groundwater systems have conducted a minimum of three rounds of monitoring. (At least one sample shall have been taken since January 1, 1990). Both surface and groundwater systems shall demonstrate that all previous analytical results were less than the maximum contaminant level. Systems that use a new water source are not eligible for a waiver until three rounds of monitoring from the new source have been completed.

(5) In determining the appropriate reduced monitoring frequency, the State shall consider:

(i) Reported concentrations from all previous monitoring;

(ii) The degree of variation in reported concentrations; and

(iii) Other factors which may affect contaminant concentrations such as changes in groundwater pumping rates, changes in the system's configuration, changes in the system's operating procedures, or changes in stream flows or characteristics.

(6) A decision by the State to grant a waiver shall be made in writing and shall set forth the basis for the determination. The determination may be initiated by the State or upon an application by the public water system. The public water system shall specify the basis for its request. The State shall review and, where appropriate, revise its determination of the appropriate monitoring frequency when the system submits new monitoring data or when other data relevant to the system's appropriate monitoring frequency become available.

(7) Systems which exceed the maximum contaminant levels as calculated in §141.23(i) of this section shall monitor quarterly beginning in the next quarter after the violation occurred.

(8) The State may decrease the quarterly monitoring requirement to the frequencies specified in paragraphs (c)(1) and (c)(2) of this section provided it has determined that the system is reliably and consistently below the maximum contaminant level. In no case can a State make this determination unless a groundwater system takes a minimum of two quarterly samples and a surface water system takes a minimum of four quarterly samples.

(9) All new systems or systems that use a new source of water that begin operation after January 22, 2004 must demonstrate compliance with the MCL within a period of time specified by the State. The system must also comply with the initial sampling frequencies specified by the State to ensure a system can demonstrate compliance with the MCL. Routine and increased monitoring frequencies shall be conducted in accordance with the requirements in this section.

(d) All public water systems (community; non-transient, non-community;

and transient, non-community systems) shall monitor to determine compliance with the maximum contaminant level for nitrate in § 141.62.

(1) Community and non-transient, non-community water systems served by groundwater systems shall monitor annually beginning January 1, 1993; systems served by surface water shall monitor quarterly beginning January 1, 1993.

(2) For community and non-transient, non-community water systems, the repeat monitoring frequency for groundwater systems shall be quarterly for at least one year following any one sample in which the concentration is ≥50 percent of the MCL. The State may allow a groundwater system to reduce the sampling frequency to annually after four consecutive quarterly samples are reliably and consistently less than the MCL.

(3) For community and non-transient, non-community water systems, the State may allow a surface water system to reduce the sampling frequency to annually if all analytical results from four consecutive quarters are <50 percent of the MCL. A surface water system shall return to quarterly monitoring if any one sample is ≥50 percent of the MCL.

(4) Each transient non-community water system shall monitor annually beginning January 1, 1993.

(5) After the initial round of quarterly sampling is completed, each community and non-transient non-community system which is monitoring annually shall take subsequent samples during the quarter(s) which previously resulted in the highest analytical result.

(e) All public water systems (community; non-transient, non-community; and transient, non-community systems) shall monitor to determine compliance with the maximum contaminant level for nitrite in § 141.62(b).

(1) All public water systems shall take one sample at each sampling point in the compliance period beginning January 1, 1993 and ending December 31, 1995.

(2) After the initial sample, systems where an analytical result for nitrite is <50 percent of the MCL shall monitor at the frequency specified by the State.

(3) For community, non-transient, non-community, and transient non-community water systems, the repeat monitoring frequency for any water system shall be quarterly for at least one year following any one sample in which the concentration is ≥50 percent of the MCL. The State may allow a system to reduce the sampling frequency to annually after determining the system is reliably and consistently less than the MCL.

(4) Systems which are monitoring annually shall take each subsequent sample during the quarter(s) which previously resulted in the highest analytical result.

(f) Confirmation samples:

(1) Where the results of sampling for antimony, arsenic, asbestos, barium, beryllium, cadmium, chromium, cyanide, fluoride, mercury, nickel, selenium or thallium indicate an exceedance of the maximum contaminant level, the State may require that one additional sample be collected as soon as possible after the initial sample was taken (but not to exceed two weeks) at the same sampling point.

(2) Where nitrate or nitrite sampling results indicate an exceedance of the maximum contaminant level, the system shall take a confirmation sample within 24 hours of the system's receipt of notification of the analytical results of the first sample. Systems unable to comply with the 24-hour sampling requirement must immediately notify persons served by the public water system in accordance with § 141.202 and meet other Tier 1 public notification requirements under subpart Q of this part. Systems exercising this option must take and analyze a confirmation sample within two weeks of notification of the analytical results of the first sample.

(3) If a State-required confirmation sample is taken for any contaminant, then the results of the initial and confirmation sample shall be averaged. The resulting average shall be used to determine the system's compliance in accordance with paragraph (i) of this section. States have the discretion to delete results of obvious sampling errors.

(g) The State may require more frequent monitoring than specified in

paragraphs (b), (c), (d) and (e) of this section or may require confirmation samples for positive and negative results at its discretion.

(h) Systems may apply to the State to conduct more frequent monitoring than the minimum monitoring frequencies specified in this section.

(i) Compliance with §141.11 or §141.62(b) (as appropriate) shall be determined based on the analytical result(s) obtained at each sampling point.

(1) For systems which are conducting monitoring at a frequency greater than annual, compliance with the maximum contaminant levels for antimony, arsenic, asbestos, barium, beryllium, cadmium, chromium, cyanide, fluoride, mercury, nickel, selenium or thallium is determined by a running annual average at any sampling point. If the average at any sampling point is greater than the MCL, then the system is out of compliance. If any one sample would cause the annual average to be exceeded, then the system is out of compliance immediately. Any sample below the method detection limit shall be calculated at zero for the purpose of determining the annual average. If a system fails to collect the required number of samples, compliance (average concentration) will be based on the total number of samples collected.

(2) For systems which are monitoring annually, or less frequently, the system is out of compliance with the maximum contaminant levels for antimony, arsenic, asbestos, barium, beryllium, cadmium, chromium, cyanide, fluoride, mercury, nickel, selenium or thallium if the level of a contaminant is greater than the MCL. If confirmation samples are required by the State, the determination of compliance will be based on the annual average of the initial MCL exceedance and any State-required confirmation samples. If a system fails to collect the required number of samples, compliance (average concentration) will be based on the total number of samples collected.

(3) Compliance with the maximum contaminant levels for nitrate and nitrate is determined based on one sample if the levels of these contaminants are below the MCLs. If the levels of nitrate and/or nitrite exceed the MCLs in the initial sample, a confirmation sample is required in accordance with paragraph (f)(2) of this section, and compliance shall be determined based on the average of the initial and confirmation samples.

(4) Arsenic sampling results will be reported to the nearest 0.001 mg/L.

(j) Each public water system shall monitor at the time designated by the State during each compliance period.

(k) Inorganic analysis:

(1) Analysis for the following contaminants shall be conducted in accordance with the methods in the following table, or the alternative methods listed in appendix A to subpart C of this part, or their equivalent as determined by EPA. Criteria for analyzing arsenic, barium, beryllium, cadmium, calcium, chromium, copper, lead, nickel, selenium, sodium, and thallium with digestion or directly without digestion, and other analytical test procedures are contained in *Technical Notes on Drinking Water Methods*, EPA–600/R–94–173, October 1994. This document is available from the National Service Center for Environmental Publications (NSCEP), P.O. Box 42419, Cincinnati, OH 45242–0419 or *http://www.epa.gov/nscep/*.

Contaminant	Methodology [13]	EPA	ASTM [3]	SM [4] (18th, 19th ed.)	SM [4] (20th ed.)	SM Online [22]	Other
1. Alkalinity	Titrimetric		D1067–92, 02 B	2320 B	2320 B	2320 B–97.	
	Electrometric titration					I–1030–85 [5].	
2. Antimony	Inductively Coupled Plasma (ICP)—Mass Spectrometry.	200.8 [2]					
	Hydride-Atomic Absorption.		D3697–92, 02.				
	Atomic Absorption; Platform.	200.9 [2]					
	Atomic Absorption; Furnace.			3113 B		3113 B–99.	
3. Arsenic [14]	ICP-Mass Spectrometry	200.8 [2].					
	Atomic Absorption; Platform.	200.9 [2].					
	Atomic Absorption; Furnace.		D2972–97, 03 C	3113 B		3113 B–99.	
	Hydride Atomic Absorption.		D1972–97, 03 B	3114 B		3114 B–97.	
4. Asbestos	Transmission Electron Microscopy.	100.1 [9]					
	Transmission Electron Microscopy.	100.2 [10]					
5. Barium	Inductively Coupled Plasma.	200.7 [2]		3120 B	3120 B	3120 B–99.	
	ICP-Mass Spectrometry	200.8 [2]					
	Atomic Absorption; Direct.			3111D		3111 D–99.	
	Atomic Absorption; Furnace.			3113 B		3113 B–99.	
6. Beryllium	Inductively Coupled Plasma.	200.7 [2]		3120 B	3120 B	3120 B–99.	
	ICP-Mass Spectrometry	200.8 [2]					
	Atomic Absorption; Platform.	200.9 [2]					
	Atomic Absorption; Furnace.		D3645–97, 03 B	3113 B		3113 B–99.	
7. Cadmium	Inductively Coupled Plasma.	200.7 [2]					
	ICP-Mass Spectrometry	200.8 [2]					
	Atomic Absorption; Platform.	200.9 [2]					

Contaminant	Methodology [13]	EPA	ASTM [3]	SM [4] (18th, 19th ed.)	SM [4] (20th ed.)	SM Online [22]	Other
	Atomic Absorption; Furnace.	.....	.....	3113 B	.....	3113 B–99.	
8. Calcium	EDTA titrimetric	.....	D511–93, 03 A	3500–Ca D ...	3500–Ca B ...	3500–Ca B–97.	
	Atomic Absorption; Direct Aspiration.	.....	D511–93, 03 B	3111 B	.....	3111 B–99.	
	Inductively Coupled Plasma.	200.7 [2]	.....	3120 B	3120 B	3120 B–99.	
	Ion Chromatography	.....	D6919–03.				
9. Chromium	Inductively Coupled Plasma.	200.7 [2]	.....	3120 B	3120 B	3120 B–99.	
	ICP-Mass Spectrometry	200.8 [2]					
	Atomic Absorption; Platform.	200.9 [2]					
	Atomic Absorption; Furnace.	.....	.....	3113 B	.....	3113 B–99.	
10. Copper	Atomic Absorption; Furnace.	.....	D1688–95, 02 C	3113 B	.....	3113 B–99.	
	Atomic Absorption; Direct Aspiration.	.....	D1688–95, 02 A	3111 B	.....	3111 B–99.	
	Inductively Coupled Plasma.	200.7 [2]	.....	3120 B	3120 B	3120 B–99.	
	ICP-Mass spectrometry	200.8 [2]					
	Atomic Absorption; Platform.	200.9 [2]					
11. Conductivity	Conductance	.....	D1125–95 (Reapproved 1999) A.	2510 B	2510 B	2510 B–97.	
12. Cyanide	Manual Distillation followed by	.....	D2036–98 A	4500–CN^- C	4500–CN^- C.		
	Spectrophotometric, Amenable.	.....	D2036–98 B	4500–CN^- G	4500–CN^- G	4500–CN^- G–99.	
	Spectro-photometric Manual.	.....	D2036–98 A	4500–CN^- E	4500–CN^- E	4500–CN^- E–99.	I–3300–85 [5]
	Spectro-photometric Semi-automated.	335.4 [6]					
	Selective Electrode	.....	.....	4500–CN^- F	4500–CN^- F	4500–CN^- F–99.	
	UV, Distillation, Spectrophotometric.	.....	.....	.....	.....	.....	Kelada–01 [17]

	Micro Distillation, Flow Injection, Spectrophotometric.	.....	.....	.....	.....	.....	QuikChem 10–204–00–1–X [18]
	Ligand Exchange and Amperometry [21].	.....	D6888–04	.....	.....	.....	OIA–1677, DW [20]
13. Fluoride	Ion Chromatography	300.0 [6], 300.1 [19]	D4327–97, 03	4110 B	4110 B	4110 B–00.	
	Manual Distill.; Color. SPADNS.	.....	.....	4500–F^- B, D.	4500–F^- B, D.	4500–F^- B, D–97.	
	Manual Electrode	.....	D1179–93, 99 B	4500–F^- C ...	4500–F^- C ...	4500–F^- C–97.	
	Automated Electrode	.....	.....	.....	.....	.....	380–75WE [11]
	Automated Alizarin	.....	.....	4500–F^- E ...	4500–F^- E ...	4500–F^- E–97.	129–71W [11]
	Capillary Ion Electrophoresis.	.....	.....	.....	.....	.....	D6508, Rev. 2 [23]
14. Lead	Atomic Absorption; Furnace.	.....	D3559–96, 03 D	3113 B	.....	3113 B–99.	
	ICP–Mass spectrometry	200.8 [2]					
	Atomic Absorption; Platform.	200.9 [2]					
	Differential Pulse Anodic Stripping Voltametry.	.....	.....	.....	.....	.....	Method 1001 [16]
15. Magnesium	Atomic Absorption	.....	D511–93, 03 B	3111 B	.....	3111 B–99.	
	ICP	200.7 [2]	.....	3120 B	3120 B	3120 B–99.	
	Complexation Titrimetric Methods.	.....	D511–93, 03 A	3500–Mg E ...	3500–Mg B ...	3500–Mg B–97.	
	Ion Chromatography	.....	D6919–03.				
16. Mercury	Manual, Cold Vapor	245.1 [2]	D3223–97, 02	3112 B	.....	3112 B–99.	
	Automated, Cold Vapor	245.2 [1]					
	ICP–Mass Spectrometry	200.8 [2]					
17. Nickel	Inductively Coupled Plasma.	200.7 [2]	.....	3120 B	3120 B	3120 B–99.	
	ICP–Mass Spectrometry	200.8 [2]					
	Atomic Absorption; Platform.	200.9 [2]					
	Atomic Absorption; Direct.	.....	.....	3111 B	.....	3111 B–99.	
	Atomic Absorption; Furnace.	.....	.....	3113 B	.....	3113 B–99.	
18. Nitrate	Ion Chromatography	300.0 [6], 300.1 [19]	D4327–97, 03	4110 B	4110 B	4110 B–00	B–1011 [8]
	Automated Cadmium Reduction.	353.2 [6]	D3867–90 A	4500–NO_3^- F	4500–NO_3^- F	4500–NO_3^- F–00	

Contaminant	Methodology [13]	EPA	ASTM [3]	SM [4] (18th, 19th ed.)	SM [4] (20th ed.)	SM Online [22]	Other
	Ion Selective Electrode	.....	.....	4500–NO_3^- D.	4500–NO_3^- D.	4500–NO_3^- D–00.	601 [7]
	Manual Cadmium Reduction.	.....	D3867–90 B	4500–NO_3^- E	4500–NO_3^- E	4500–NO_3^- E–00	
	Capillary Ion Electrophoresis.	.....	D6508–00.				
19. Nitrite	Ion Chromatography	300.0 [6], 300.1 [19].	D4327–97, 03	4110 B	4110 B	4110 B–00	B–1011 [8]
	Automated Cadmium Reduction.	353.2 [6]	D3867–90 A	4500–NO_3^- F	4500–NO_3^- F	4500–NO_3^- F–00	
	Manual Cadmium Reduction.	.....	D3867–90 B	4500–NO_3^- E	4500–NO_3^- E	4500–NO_3^- E–00	
	Spectrophotometric	.....	.....	4500–NO_2^- B	4500–NO_2^- B	4500–NO_2^- B–00	
	Capillary Ion Electrophoresis.	.....	D6508–00				
20. Ortho-phosphate	Colorimetric, Automated, Ascorbic Acid.	365.1 [6]	.....	4500–P F	4500–P F		
	Colorimetric, ascorbic acid, single reagent.	.....	D515–88 A	4500–P E	4500–P E		
	Colorimetric Phosphomolybdate; Automated-segmented flow; Automated Discrete.	.....	.....	.....	.....	.....	I–1601–85 [5] I–2601–90 [5] I–2598–85 [5]
	Ion Chromatography	300.0 [6], 300.1 [19].	D4327–97, 03	4110 B	4110 B	4110 B–00	
	Capillary Ion Electrophoresis.	.....	D6508–00				
21. pH	Electrometric	150.1, 150.2 [1]	D1293–95, 99	4500–H^+ B	4500–H^+ B	4500–H^+ B–00.	
22. Selenium	Hydride-Atomic Absorption.	.....	D3859–98, 03 A	3114 B	.....	3114 B–97.	
	ICP–Mass Spectrometry	200.8 [2]					
	Atomic Absorption; Platform.	200.9 [2]					
	Atomic Absorption; Furnace.	.....	D3859–98, 03 B	3113 B	.....	3113 B–99.	
23. Silica	Colorimetric, Molybdate Blue.	.....	.....	.....	.....	.....	I–1700–85 [5]

	Automated-segmented Flow.	.....	.....	.....	.....	.....	I–2700–85 [5]
	Colorimetric	.....	D859–94, 00.				
	Molybdosilicate	.....	.....	4500–Si D	4500–SiO_2 C	4500–SiO_2 C–97.	
	Heteropoly blue	.....	.....	4500–Si E	4500–SiO_2 D	4500–SiO_2 D–97.	
	Automated for Molybdate-reactive Silica.	.....	.....	4500–Si F	4500–SiO_2 E	4500–SiO_2 E–97.	
	Inductively Coupled Plasma.	200.7 [2]	.....	3120 B	3120 B	3120 B–99.	
24. Sodium	Inductively Coupled Plasma.	200.7 [2]					
	Atomic Absorption; Direct Aspiration.	.....	.....	3111 B	.....	3111 B–99.	
	Ion Chromatography	.....	D6919–03.				
25. Temperature	Thermometric	.....	.....	2550	2550	2550–00.	
26. Thallium	ICP–Mass Spectrometry	200.8 [2]					
	Atomic Absorption; Platform.	200.9 [2].					

The procedures shall be done in accordance with the documents listed below. The incorporation by reference of the following documents listed in footnotes 1–11, 16–20, and 22–23 was approved by the Director of the Federal Register in accordance with 5 U.S.C. 552(a) and 1 CFR part 51. Copies of the documents may be obtained from the sources listed below. Information regarding obtaining these documents can be obtained from the Safe Drinking Water Hotline at 800–426–4791. Documents may be inspected at EPA's Drinking Water Docket, EPA West, 1301 Constitution Avenue, NW., Room 3334, Washington, DC 20460 (Telephone: 202–566–2426); or at the National Archives and Records Administration (NARA). For information on the availability of this material at NARA, call 202–741–6030, or go to: *http://www.archives.gov/federal_register/code_of_federal_regulations/ibr_locations.html.*

[1] "Methods for Chemical Analysis of Water and Wastes," EPA/600/4–79/020, March 1983. Available at NTIS, PB84–128677.

[2] "Methods for the Determination of Metals in Environmental Samples—Supplement I," EPA/600/R–94/111, May 1994. Available at NTIS, PB95–125472.

[3] *Annual Book of ASTM Standards,* ASTM International, 100 Barr Harbor Drive, West Conshohocken, PA 19428, *http://www.astm.org.;* Annual Book of ASTM Standards 1994, Vols. 11.01 and 11.02; Annual Book of ASTM Standards 1996, Vols. 11.01 and 11.02; Annual Book of ASTM Standards 1999, Vols. 11.01 and 11.02; Annual Book of ASTM Standards 2003, Vols. 11.01 and 11.02.

[4] *Standard Methods for the Examination of Water and Wastewater,* American Public Health Association, 800 I Street NW., Washington, DC 20001–3710; *Standard Methods for the Examination of Water and Wastewater,* 18th edition (1992); *Standard Methods for the Examination of Water and Wastewater,* 19th edition (1995); *Standard Methods for the Examination of Water and Wastewater,* 20th edition (1998).The following methods from this edition cannot be used: 3111 B, 3111 D, 3113 B, and 3114 B.

[5] U.S. Geological Survey, Federal Center, Box 25286, Denver, CO 80225–0425; Methods for Analysis by the U.S. Geological Survey National Water Quality Laboratory—Determination of Inorganic and Organic Constituents in Water and Fluvial Sediment, Open File Report 93–125, 1993; Techniques of Water Resources Investigation of the U.S. Geological Survey, Book 5, Chapter A–1, 3rd edition, 1989.

[6] "Methods for the Determination of Inorganic Substances in Environmental Samples," EPA/600/R–93/100, August 1993. Available as Technical Report PB94–120821 at National Technical Information Service (NTIS), 5301 Shawnee Road, Alexandria, VA 22312. *http://www.ntis.gov.*

[7] The procedure shall be done in accordance with the Technical Bulletin 601 "Standard Method of Test for Nitrate in Drinking Water," July 1994, PN 221890–001, Analytical Technology, Inc. Copies may be obtained from ATI Orion, 529 Main Street, Boston, MA 02129.

[8] Method B–1011. "Waters Test Method for Determination of Nitrite/Nitrate in Water Using Single Column Ion Chromatography," August, 1987. Copies may be obtained from Waters Corporation, Technical Services Division, 34 Maple Street, Milford, MA 01757, Telephone: 508/482–2963, Fax: 508/482–4056.

[9] Method 100.1, "Analytical Method For Determination of Asbestos Fibers in Water," EPA/600/4–83/043, EPA, September 1983. Available at NTIS, PB83–260471.

[10] Method 100.2, "Determination of Asbestos Structure Over 10-μm In Length In Drinking Water," EPA/600/R–94/134, June 1994. Available at NTIS, PB94–201902.

[11] Industrial Method No. 129–71W, "Fluoride in Water and Wastewater," December 1972, and Method No. 380–75WE, "Fluoride in Water and Wastewater," February 1976, Technicon Industrial Systems. Copies may be obtained from Bran & Luebbe, 1025 Busch Parkway, Buffalo Grove, IL 60089.

[12] Unfiltered, no digestion or hydrolysis.

[13] Because MDLs reported in EPA Methods 200.7 and 200.9 were determined using a 2x preconcentration step during sample digestion, MDLs determined when samples are analyzed by direct analysis (*i.e.,* no sample digestion) will be higher. For direct analysis of cadmium and arsenic by Method 200.7, and arsenic by Method 3120 B, sample preconcentration using pneumatic nebulization may be required to achieve lower detection limits. Preconcentration may also be required for direct analysis of antimony, lead, and thallium by Method 200.9; antimony and lead by Method 3113 B; and lead by Method D3559–90D, unless multiple in-furnace depositions are made.

[14] If ultrasonic nebulization is used in the determination of arsenic by Method 200.8, the arsenic must be in the pentavalent state to provide uniform signal response. For direct analysis of arsenic with Method 200.8 using ultrasonic nebulization, samples and standards must contain 1 mg/L of sodium hypochlorite.

[15] [Reserved]

[16] The description for Method Number 1001 for lead is available from Palintest, LTD, 21 Kenton Lands Road, P.O. Box 18395, Erlanger, KY 41018. Or from the Hach Company, P.O. Box 389, Loveland, CO 80539.

[17] The description for the Kelada-01 Method, ''Kelada Automated Test Methods for Total Cyanide, Acid Dissociable Cyanide, And Thiocyanate,'' Revision 1.2, August 2001, EPA # 821–B–01–009 for cyanide is available from the National Technical Information Service (NTIS), PB 2001–108275, 5285 Port Royal Road, Springfield, VA 22161. The toll free telephone number is 800–553–6847. **Note:** A 450–W UV lamp may be used in this method instead of the 550–W lamp specified if it provides performance within the quality control (QC) acceptance criteria of the method in a given instrument. Similarly, modified flow cell configurations and flow conditions may be used in the method, provided that the QC acceptance criteria are met.

[18] The description for the QuikChem Method 10–204–00–1–X, ''Digestion and distillation of total cyanide in drinking and wastewaters using MICRO DIST and determination of cyanide by flow injection analysis,'' Revision 2.1, November 30, 2000, for cyanide is available from Lachat Instruments, 6645 W. Mill Rd., Milwaukee, WI 53218. Telephone: 414–358–4200.

[19] ''Methods for the Determination of Organic and Inorganic Compounds in Drinking Water,'' Vol. 1, EPA 815–R–00–014, August 2000. Available as Technical Report PB2000–106981 at National Technical Information Service (NTIS), 5301 Shawnee Road, Alexandria, VA 22312. *http://www.ntis.gov.*

[20] Method OIA–1677, DW ''Available Cyanide by Flow Injection, Ligand Exchange, and Amperometry,'' January 2004. EPA–821–R–04–001, Available from ALPKEM, A Division of OI Analytical, P.O. Box 9010, College Station, TX 77842–9010.

[21] Sulfide levels below those detected using lead acetate paper may produce positive method interferences. Test samples using a more sensitive sulfide method to determine if a sulfide interference is present, and treat samples accordingly.

[22] Standard Methods Online, American Public Health Association, 800 I Street NW., Washington, DC 20001, available at *http://www.standardmethods.org.* The year in which each method was approved by the Standard Methods Committee is designated by the last two digits in the method number. The methods listed are the only online versions that may be used.

(2) Sample collection for antimony, arsenic, asbestos, barium, beryllium, cadmium, chromium, cyanide, fluoride, mercury, nickel, nitrate, nitrite, selenium, and thallium under this section shall be conducted using the sample preservation, container, and maximum holding time procedures specified in the table below:

Contaminant	Preservative [1]	Container [2]	Time [3]
Antimony	HNO^3	P or G	6 months
Arsenic	Conc HNO_3 to pH <2.	P or G	6 months
Asbestos	4 °C	P or G	48 hours [4]
Barium	HNO^3	P or G	6 months
Beryllium	HNO^3	P or G	6 months
Cadmium	HNO^3	P or G	6 months
Chromium	HNO^3	P or G	6 months
Cyanide	4 °C, NaOH	P or G	14 days
Fluoride	None	P or G	1 month
Mercury	HNO^3	P or G	28 days
Nickel	HNO^3	P or G	6 months
Nitrate	4 °C	P or G	48 hours [5]
Nitrate-Nitrite [6]	H^2SO^4	P or G	28 days
Nitrite	4 °C	P or G	48 hours
Selenium	HNO^3	P or G	6 months
Thallium	HNO^3	P or G	6 months

[1] For cyanide determinations samples must be adjusted with sodium hydroxide to pH 12 at the time off collection. When chilling is indicated the sample must be shipped and stored at 4 °C or less. Acidification of nitrate or metals samples may be with a concentrated acid or a dilute (50% by volume) solution of the applicable concentrated acid. Acidification of samples for metals analysis is encouraged and allowed at the laboratory rather than at the time of sampling provided the shipping time and other instructions in Section 8.3 of EPA Methods 200.7 or 200.8 or 200.9 are followed.

[2] P = plastic, hard or soft; G = glass, hard or soft.

[3] In all cases samples should be analyzed as soon after collection as possible. Follow additional (if any) information on preservation, containers or holding times that is specified in method.

[4] Instructions for containers, preservation procedures and holding times as specified in Method 100.2 must be adhered to for all compliance analyses including those conducted with Method 100.1.

[5] If the sample is chlorinated, the holding time for an unacidified sample kept at 4 °C is extended to 14 days.

[6] Nitrate-Nitrite refers to a measurement of total nitrate.

(3) Analysis under this section shall only be conducted by laboratories that have been certified by EPA or the State. Laboratories may conduct sample analysis under provisional certification until January 1, 1996. To receive certification to conduct analyses for antimony, arsenic, asbestos, barium, beryllium, cadmium, chromium, cyanide, fluoride, mercury, nickel, nitrate, nitrite and selenium and thallium, the laboratory must:

(i) Analyze Performance Evaluation (PE) samples provided by EPA, the State or by a third party (with the approval of the State or EPA) at least once a year.

(ii) For each contaminant that has been included in the PE sample and for each method for which the laboratory desires certification achieve quantitative results on the analyses that are within the following acceptance limits:

Contaminant	Acceptance limit
Antimony	±30 at ≥0.006 mg/1
Arsenic	±30 at ≥0.003 mg/L
Asbestos	2 standard deviations based on study statistics.
Barium	±15% at ≥0.15 mg/1
Beryllium	±15% at ≥0.001 mg/1
Cadmium	±20% at ≥0.002 mg/1
Chromium	±15% at ≥0.01 mg/1
Cyanide	±25% at ≥0.1 mg/1
Fluoride	±10% at ≥1 to 10 mg/1
Mercury	±30% at ≥0.0005 mg/1
Nickel	±15% at ≥0.01 mg/1
Nitrate	±10% at ≥0.4 mg/1
Nitrite	±15% at ≥0.4 mg/1
Selenium	±20% at ≥0.01 mg/1
Thallium	±30% at ≥0.002 mg/1

(l) Analyses for the purpose of determining compliance with § 141.11 shall be conducted using the requirements specified in paragraphs (l) through (q) of this section.

(1) Analyses for all community water systems utilizing surface water sources shall be completed by June 24, 1978. These analyses shall be repeated at yearly intervals.

(2) Analyses for all community water systems utilizing only ground water sources shall be completed by June 24, 1979. These analyses shall be repeated at three-year intervals.

(3) For non-community water systems, whether supplied by surface or ground sources, analyses for nitrate shall be completed by December 24, 1980. These analyses shall be repeated at intervals determined by the State.

(4) The State has the authority to determine compliance or initiate enforcement action based upon analytical results and other information compiled by their sanctioned representatives and agencies.

(m) If the result of an analysis made under paragraph (l) of this section indicates that the level of any contaminant listed in § 141.11 exceeds the maximum contaminant level, the supplier of the water shall report to the State within 7 days and initiate three additional analyses at the same sampling point within one month.

(n) When the average of four analyses made pursuant to paragraph (m) of this section, rounded to the same number of significant figures as the maximum contaminant level for the substance in question, exceeds the maximum contaminant level, the supplier of water shall notify the State pursuant to §141.31 and give notice to the public pursuant to subpart Q. Monitoring after public notification shall be at a frequency designated by the State and shall continue until the maximum contaminant level has not been exceeded in two successive samples or until a monitoring schedule as a condition to a variance, exemption or enforcement action shall become effective.

(o) The provisions of paragraphs (m) and (n) of this section notwithstanding, compliance with the maximum contaminant level for nitrate shall be determined on the basis of the mean of two analyses. When a level exceeding the maximum contaminant level for nitrate is found, a second analysis shall be initiated within 24 hours, and if the mean of the two analyses exceeds the maximum contaminant level, the supplier of water shall report his findings to the State pursuant to §141.31 and shall notify the public pursuant to subpart Q.

(p) For the initial analyses required by paragraph (1) (1), (2) or (3) of this section, data for surface waters acquired within one year prior to the effective date and data for ground waters acquired within 3 years prior to the effective date of this part may be substituted at the discretion of the State.

(q) [Reserved]

[56 FR 3579, Jan. 30, 1991]

EDITORIAL NOTE: For FEDERAL REGISTER citations affecting §141.23, see the List of CFR Sections Affected, which appears in the Finding Aids section of the printed volume and at *www.govinfo.gov*.

§ 141.24 Organic chemicals, sampling and analytical requirements.

(a)–(d) [Reserved]

(e) Analyses for the contaminants in this section shall be conducted using the methods listed in the following table, or the alternative methods listed in appendix A to subpart C of this part, or their equivalent as determined by EPA.

(1) The following documents are incorporated by reference. This incorporation by reference was approved by the Director of the Federal Register in accordance with 5 U.S.C. 552(a) and 1 CFR part 51. Copies may be inspected at EPA's Drinking Water Docket, 1301 Constitution Avenue, NW., EPA West, Room 3334, Washington, DC 20460 (Telephone: 202–566–2426); or at the National Archives and Records Administration (NARA). For information on the availability of this material at NARA, call 202–741–6030, or go to: *http://www.archives.gov/federal_register/code_of_federal_regulations/ibr_locations.html*. Method 508A and 515.1 are in *Methods for the Determination of Organic Compounds in Drinking Water*, EPA/600/4–88–039, December 1988, Revised, July 1991. Methods 547, 550 and 550.1 are in *Methods for the Determination of Organic Compounds in Drinking Water—Supplement I*, EPA/600–4–90–020, July 1990. Methods 548.1, 549.1, 552.1 and 555 are in *Methods for the Determination of Organic Compounds in Drinking Water—Supplement II*, EPA/600/R–92–129, August 1992. Methods 502.2, 504.1, 505, 506, 507, 508, 508.1, 515.2, 524.2 525.2, 531.1, 551.1 and 552.2 are in *Methods for the Determination of Organic Compounds in Drinking Water—Supplement III*, EPA/600/R–95–131, August 1995. Method 1613 is titled ''Tetra-through Octa-Chlorinated Dioxins and Furans by Isotope-Dilution HRGC/HRMS,'' EPA/821–B–94–005, October 1994. These documents are available from the National Technical Information Service, NTIS PB91–231480, PB91–146027, PB92–207703, PB95–261616 and PB95–104774, U.S. Department of Commerce, 5285 Port Royal Road, Springfield, Virginia 22161. The toll free number is: 800–553–6847. Method 6651 shall be followed in accordance with *Standard Methods for the Examination of Water and Wastewater*, 18th edition (1992), 19th edition (1995), or 20th edition (1998), American Public Health Association (APHA); any of these three editions may be used. Method 6610 shall be followed in accordance with *Standard Methods for the Examination of Water and Wastewater*, (18th Edition Supplement) (1994), or with the 19th edition (1995) or 20th edition (1998) of *Standard Methods for the Examination of Water*

and Wastewater; any of these publications may be used. The APHA documents are available from APHA, 1015 Fifteenth Street NW., Washington, DC 20005. Other required analytical test procedures germane to the conduct of these analyses are contained in *Technical Notes on Drinking Water Methods,* EPA/600/R–94–173, October 1994, NTIS PB95–104766. EPA Methods 515.3 and 549.2 are available from U.S. Environmental Protection Agency, National Exposure Research Laboratory (NERL)–Cincinnati, 26 West Martin Luther King Drive, Cincinnati, OH 45268. ASTM Method D 5317–93, 98 (Reapproved 2003) is available in the *Annual Book of ASTM Standards*, (1999), Vol. 11.02, ASTM International, 100 Barr Harbor Drive, West Conshohocken, PA 19428, any edition containing the cited version of the method may be used. EPA Method 515.4, ''Determination of Chlorinated Acids in Drinking Water by Liquid-Liquid Microextraction, Derivatization and Fast Gas Chromatography with Electron Capture Detection,'' Revision 1.0, April 2000, EPA/815/B–00/001 and EPA Method 552.3, ''Determination of Haloacetic Acids and Dalapon in Drinking Water by Liquid-Liquid Microextraction, Derivatization, and Gas Chromatography with Electron Capture Detection,'' Revision 1.0, July 2003, EPA 815–B–03–002, can be accessed and downloaded directly online at *http://www.epa.gov/safewater/methods/sourcalt.html*. Syngenta Method AG–625, ''Atrazine in Drinking Water by Immunoassay,'' February 2001, is available from Syngenta Crop Protection, Inc., 410 Swing Road, P.O. Box 18300, Greensboro, NC 27419. Telephone: 336–632–6000. Method 531.2 ''Measurement of N-methylcarbamoyloximes and N-methylcarbamates in Water by Direct Aqueous Injection HPLC with Postcolumn Derivatization,'' Revision 1.0, September 2001, EPA 815–B–01–002, can be accessed and downloaded directly online at *http://www.epa.gov/safewater/methods/sourcalt.html*.

Contaminant	EPA method	Standard methods	ASTM	Other
1. Benzene	502.2, 524.2.			
2. Carbon tetrachloride	502.2, 524.2, 551.1.			
3. Chlorobenzene	502.2, 524.2.			
4. 1,2-Dichlorobenzene	502.2, 524.2.			
5. 1,4-Dichlorobenzene	502.2, 524.2.			
6. 1,2-Dichloroethane	502.2, 524.2.			
7. cis-Dichloroethylene	502.2, 524.2.			
8. trans-Dichloroethylene	502.2, 524.2.			
9. Dichloromethane	502.2, 524.2.			
10. 1,2-Dichloropropane	502.2, 524.2.			
11. Ethylbenzene	502.2, 524.2.			
12. Styrene	502.2, 524.2.			
13. Tetrachloroethylene	502.2, 524.2, 551.1.			
14. 1,1,1-Trichloroethane	502.2, 524.2, 551.1.			
15. Trichloroethylene	502.2, 524.2, 551.1.			
16. Toluene	502.2, 524.2.			
17. 1,2,4-Trichlorobenzene	502.2, 524.2.			
18. 1,1-Dichloroethylene	502.2, 524.2.			
19. 1,1,2-Trichloroethane	502.2, 524.2, 551.1.			
20. Vinyl chloride	502.2, 524.2.			
21. Xylenes (total)	502.2, 524.2.			
22. 2,3,7,8-TCDD (dioxin)	1613.			
23. 2,4–D[4] (as acids, salts, and esters)	515.2, 555, 515.1, 515.3, 515.4.		D5317–93, 98 (Reapproved 2003).	
24. 2,4,5–TP[4] (Silvex)	515.2, 555, 515.1, 515.3, 515.4.		D5317–93, 98 (Reapproved 2003).	
25. Alachlor[2]	507, 525.2, 508.1, 505, 551.1.			
26. Atrazine[2]	507, 525.2, 508.1, 505, 551.1.			Syngenta[5] AG–625
27. Benzo(a)pyrene	525.2, 550, 550.1.			
28. Carbofuran	531.1, 531.2	6610.		

Contaminant	EPA method	Standard methods	ASTM	Other
29. Chlordane	508, 525.2, 508.1, 505.			
30. Dalapon	552.1 515.1, 552.2, 515.3, 515.4, 552.3.			
31. Di(2-ethylhexyl)adipate	506, 525.2.			
32. Di(2-ethylhexyl)phthalate	506, 525.2.			
33. Dibromochloropropane (DBCP)	504.1, 551.1.			
34. Dinoseb [4]	515.2, 555, 515.1, 515.3, 515.4.			
35. Diquat	549.2.			
36. Endothall	548.1.			
37. Endrin	508, 525.2, 508.1, 505, 551.1.			
38. Ethylene dibromide (EDB)	504.1, 551.1.			
39. Glyphosate	547	6651.		
40. Heptachlor	508, 525.2, 508.1, 505, 551.1.			
41. Heptachlor Epoxide	508, 525.2, 508.1, 505, 551.1.			
42. Hexachlorobenzene	508, 525.2, 508.1, 505, 551.1.			
43. Hexachlorocyclopentadiene	508, 525.2, 508.1, 505, 551.1.			
44. Lindane	508, 525.2, 508.1, 505, 551.1.			
45. Methoxychlor	508, 525.2, 508.1, 505, 551.1.			
46. Oxamyl	531.1, 531.2	6610.		
47. PCBs [3] (as decachlorobiphenyl)	508A.			
48. PCBs [3] (as Aroclors)	508.1, 508, 525.2, 505.			
49. Pentachlorophenol	515.2, 525.2, 555, 515.1, 515.3, 515.4.		D5317–93, 98 (Reapproved 2003).	
50. Picloram [4]	515.2, 555, 515.1, 515.3, 515.4.		D5317–93, 98 (Reapproved 2003).	
51. Simazine [2]	507, 525.2, 508.1, 505, 551.1.			
52. Toxaphene	508, 508.1, 525.2, 505.			
53. Total Trihalomethanes	502.2, 524.2, 551.1.			

[1] [Reserved]

[2] Substitution of the detector specified in Method 505, 507, 508 or 508.1 for the purpose of achieving lower detection limits is allowed as follows. Either an electron capture or nitrogen phosphorous detector may be used provided all regulatory requirements and quality control criteria are met.

[3] PCBs are qualitatively identified as Aroclors and measured for compliance purposes as decachlorobiphenyl. Users of Method 505 may have more difficulty in achieving the required detection limits than users of Methods 508.1, 525.2 or 508.

[4] Accurate determination of the chlorinated esters requires hydrolysis of the sample as described in EPA Methods 515.1, 515.2, 515.3, 515.4 and 555 and ASTM Method D5317–93.

[5] This method may not be used for the analysis of atrazine in any system where chlorine dioxide is used for drinking water treatment. In samples from all other systems, any result for atrazine generated by Method AG–625 that is greater than one-half the maximum contaminant level (MCL) (in other words, greater than 0.0015mg/L or 1.5 μg/L) must be confirmed using another approved method for this contaminant and should use additional volume of the original sample collected for compliance monitoring. In instances where a result from Method AG–625 triggers such confirmatory testing, the confirmatory result is to be used to determine compliance.

(2) [Reserved]

(f) Beginning with the initial compliance period, analysis of the contaminants listed in §141.61(a) (1) through (21) for the purpose of determining compliance with the maximum contaminant level shall be conducted as follows:

(1) Groundwater systems shall take a minimum of one sample at every entry point to the distribution system which is representative of each well after treatment (hereafter called a sampling point). Each sample must be taken at the same sampling point unless conditions make another sampling point more representative of each source, treatment plant, or within the distribution system.

(2) Surface water systems (or combined surface/ground) shall take a minimum of one sample at points in the

distribution system that are representative of each source or at each entry point to the distribution system after treatment (hereafter called a sampling point). Each sample must be taken at the same sampling point unless conditions make another sampling point more representative of each source, treatment plant, or within the distribution system.

(3) If the system draws water from more than one source and the sources are combined before distribution, the system must sample at an entry point to the distribution system during periods of normal operating conditions (*i.e.*, when water representative of all sources is being used).

(4) Each community and non-transient non-community water system shall take four consecutive quarterly samples for each contaminant listed in §141.61(a) (2) through (21) during each compliance period, beginning in the initial compliance period.

(5) If the initial monitoring for contaminants listed in §141.61(a) (1) through (8) and the monitoring for the contaminants listed in §141.61(a) (9) through (21) as allowed in paragraph (f)(18) has been completed by December 31, 1992, and the system did not detect any contaminant listed in §141.61(a) (1) through (21), then each ground and surface water system shall take one sample annually beginning with the initial compliance period.

(6) After a minimum of three years of annual sampling, the State may allow groundwater systems with no previous detection of any contaiminant listed in §141.61(a) to take one sample during each compliance period.

(7) Each community and non-transient non-community ground water system which does not detect a contaminant listed in §141.61(a) (1) through (21) may apply to the State for a waiver from the requirements of paragraphs (f)(5) and (f)(6) of this section after completing the initial monitoring. (For purposes of this section, detection is defined as ≥0.0005 mg/l.) A waiver shall be effective for no more than six years (two compliance periods). States may also issue waivers to small systems for the initial round of monitoring for 1,2,4-trichlorobenzene.

(8) A State may grant a waiver after evaluating the following factor(s):

(i) Knowledge of previous use (including transport, storage, or disposal) of the contaminant within the watershed or zone of influence of the system. If a determination by the State reveals no previous use of the contaminant within the watershed or zone of influence, a waiver may be granted.

(ii) If previous use of the contaminant is unknown or it has been used previously, then the following factors shall be used to determine whether a waiver is granted.

(A) Previous analytical results.

(B) The proximity of the system to a potential point or non-point source of contamination. Point sources include spills and leaks of chemicals at or near a water treatment facility or at manufacturing, distribution, or storage facilities, or from hazardous and municipal waste landfills and other waste handling or treatment facilities.

(C) The environmental persistence and transport of the contaminants.

(D) The number of persons served by the public water system and the proximity of a smaller system to a larger system.

(E) How well the water source is protected against contamination, such as whether it is a surface or groundwater system. Groundwater systems must consider factors such as depth of the well, the type of soil, and wellhead protection. Surface water systems must consider watershed protection.

(9) As a condition of the waiver a groundwater system must take one sample at each sampling point during the time the waiver is effective (*i.e.*, one sample during two compliance periods or six years) and update its vulnerability assessment considering the factors listed in paragraph (f)(8) of this section. Based on this vulnerability assessment the State must reconfirm that the system is non-vulnerable. If the State does not make this reconfirmation within three years of the initial determination, then the waiver is invalidated and the system is required to sample annually as specified in paragraph (5) of this section.

(10) Each community and non-transient non-community surface water

system which does not detect a contaminant listed in §141.61(a) (1) through (21) may apply to the State for a waiver from the requirements of (f)(5) of this section after completing the initial monitoring. Composite samples from a maximum of five sampling points are allowed, provided that the detection limit of the method used for analysis is less than one-fifth of the MCL. Systems meeting this criterion must be determined by the State to be non-vulnerable based on a vulnerability assessment during each compliance period. Each system receiving a waiver shall sample at the frequency specified by the State (if any).

(11) If a contaminant listed in §141.61(a) (2) through (21) is detected at a level exceeding 0.0005 mg/l in any sample, then:

(i) The system must monitor quarterly at each sampling point which resulted in a detection.

(ii) The State may decrease the quarterly monitoring requirement speci fied in paragraph (f)(11)(i) of this section provided it has determined that the system is reliably and consistently below the maximum contaminant level. In no case shall the State make this determination unless a groundwater system takes a minimum of two quarterly samples and a surface water system takes a minimum of four quarterly samples.

(iii) If the State determines that the system is reliably and consistently below the MCL, the State may allow the system to monitor annually. Systems which monitor annually must monitor during the quarter(s) which previously yielded the highest analytical result.

(iv) Systems which have three consecutive annual samples with no detection of a contaminant may apply to the State for a waiver as specified in paragraph (f)(7) of this section.

(v) Groundwater systems which have detected one or more of the following two-carbon organic compounds: trichloroethylene, tetrachloroethylene, 1,2-dichloroethane, 1,1,1-trichloroethane, cis-1,2-dichloroethylene, trans-1,2-dichloroethylene, or 1,1-dichloroethylene shall monitor quarterly for vinyl chloride. A vinyl chloride sample shall be taken at each sampling point at which one or more of the two-carbon organic compounds was detected. If the results of the first analysis do not detect vinyl chloride, the State may reduce the quarterly monitoring frequency of vinyl chloride monitoring to one sample during each compliance period. Surface water systems are required to monitor for vinyl chloride as specified by the State.

(12) Systems which violate the requirements of §141.61(a) (1) through (21), as determined by paragraph (f)(15) of this section, must monitor quarterly. After a minimum of four consecutive quarterly samples which show the system is in compliance as specified in paragraph (f)(15) of this section the system and the State determines that the system is reliably and consistently below the maximum contaminant level, the system may monitor at the frequency and times specified in paragraph (f)(11)(iii) of this section.

(13) The State may require a confirmation sample for positive or negative results. If a confirmation sample is required by the State, the result must be averaged with the first sampling result and the average is used for the compliance determination as specified by paragraph (f)(15). States have discretion to delete results of obvious sampling errors from this calculation.

(14) The State may reduce the total number of samples a system must analyze by allowing the use of compositing. Composite samples from a maximum of five sampling points are allowed, provided that the detection limit of the method used for analysis is less than one-fifth of the MCL. Compositing of samples must be done in the laboratory and analyzed within 14 days of sample collection.

(i) If the concentration in the composite sample is greater than or equal to 0.0005 mg/l for any contaminant listed in §141.61(a), then a follow-up sample must be taken within 14 days at each sampling point included in the composite, and be analyzed for that contaminant.

(ii) If duplicates of the original sample taken from each sampling point used in the composite sample are available, the system may use these instead of resampling. The duplicates must be analyzed and the results reported to

the State within 14 days after completing analysis of the composite sample, provided the holding time of the sample is not exceeded.

(iii) If the population served by the system is >3,300 persons, then compositing may only be permitted by the State at sampling points within a single system. In systems serving ≤3,300 persons, the State may permit compositing among different systems provided the 5-sample limit is maintained.

(iv) Compositing samples prior to GC analysis.

(A) Add 5 ml or equal larger amounts of each sample (up to 5 samples are allowed) to a 25 ml glass syringe. Special precautions must be made to maintain zero headspace in the syringe.

(B) The samples must be cooled at 4 °C during this step to minimize volatilization losses.

(C) Mix well and draw out a 5-ml aliquot for analysis.

(D) Follow sample introduction, purging, and desorption steps described in the method.

(E) If less than five samples are used for compositing, a proportionately small syringe may be used.

(v) Compositing samples prior to GC/MS analysis.

(A) Inject 5-ml or equal larger amounts of each aqueous sample (up to 5 samples are allowed) into a 25-ml purging device using the sample introduction technique described in the method.

(B) The total volume of the sample in the purging device must be 25 ml.

(C) Purge and desorb as described in the method.

(15) Compliance with §141.61(a) (1) through (21) shall be determined based on the analytical results obtained at each sampling point. If one sampling point is in violation of an MCL, the system is in violation of the MCL.

(i) For systems monitoring more than once per year, compliance with the MCL is determined by a running annual average at each sampling point.

(ii) Systems monitoring annually or less frequently whose sample result exceeds the MCL must begin quarterly sampling. The system will not be considered in violation of the MCL until it has completed one year of quarterly sampling.

(iii) If any sample result will cause the running annual average to exceed the MCL at any sampling point, the system is out of compliance with the MCL immediately.

(iv) If a system fails to collect the required number of samples, compliance will be based on the total number of samples collected.

(v) If a sample result is less than the detection limit, zero will be used to calculate the annual average.

(16) [Reserved]

(17) Analysis under this section shall only be conducted by laboratories that are certified by EPA or the State according to the following conditions (laboratories may conduct sample analysis under provisional certification until January 1, 1996):

(i) To receive certification to conduct analyses for the contaminants in §141.61(a) (2) through (21) the laboratory must:

(A) Analyze Performance Evaluation (PE) samples provided by EPA, the State, or by a third party (with the approval of the State or EPA) at least once a year by each method for which the laboratory desires certification.

(B) Achieve the quantitative acceptance limits under paragraphs (f)(17)(i)(C) and (D) of this section for at least 80 percent of the regulated organic contaminants included in the PE sample.

(C) Achieve quantitative results on the analyses performed under paragraph (f)(17)(i)(A) of this section that are within ±20% of the actual amount of the substances in the Performance Evaluation sample when the actual amount is greater than or equal to 0.010 mg/l.

(D) Achieve quantitative results on the analyses performed under paragraph (f)(17)(i)(A) of this section that are within ±40 percent of the actual amount of the substances in the Performance Evaluation sample when the actual amount is less than 0.010 mg/l.

(E) Achieve a method detection limit of 0.0005 mg/l, according to the procedures in appendix B of part 136.

(ii) To receive certification to conduct analyses for vinyl chloride, the laboratory must:

(A) Analyze Performance Evaluation (PE) samples provided by EPA, the State, or by a third party (with the approval of the State or EPA) at least once a year by each method for which the laboratory desires certification.

(B) Achieve quantitative results on the analyses performed under paragraph (f)(17)(ii)(A) of this section that are within ±40 percent of the actual amount of vinyl chloride in the Performance Evaluation sample.

(C) Achieve a method detection limit of 0.0005 mg/l, according to the procedures in appendix B of part 136.

(D) Obtain certification for the contaminants listed in §141.61(a)(2) through (21).

(18) States may allow the use of monitoring data collected after January 1, 1988, required under section 1445 of the Act for purposes of initial monitoring compliance. If the data are generally consistent with the other requirements of this section, the State may use these data (*i.e.*, a single sample rather than four quarterly samples) to satisfy the initial monitoring requirement of paragraph (f)(4) of this section. Systems which use grandfathered samples and did not detect any contaminant listed §141.61(a)(2) through (21) shall begin monitoring annually in accordance with paragraph (f)(5) of this section beginning with the initial compliance period.

(19) States may increase required monitoring where necessary to detect variations within the system.

(20) Each certified laboratory must determine the method detection limit (MDL), as defined in appendix B to part 136, at which it is capable of detecting VOCs. The acceptable MDL is 0.0005 mg/l. This concentration is the detection concentration for purposes of this section.

(21) Each public water system shall monitor at the time designated by the State within each compliance period.

(22) All new systems or systems that use a new source of water that begin operation after January 22, 2004 must demonstrate compliance with the MCL within a period of time specified by the State. The system must also comply with the initial sampling frequencies specified by the State to ensure a system can demonstrate compliance with the MCL. Routine and increased monitoring frequencies shall be conducted in accordance with the requirements in this section.

(g) [Reserved]

(h) Analysis of the contaminants listed in §141.61(c) for the purposes of determining compliance with the maximum contaminant level shall be conducted as follows, with the exception that no monitoring is required for aldicarb, aldicarb sulfoxide or aldicarb sulfone:

(1) Groundwater systems shall take a minimum of one sample at every entry point to the distribution system which is representative of each well after treatment (hereafter called a sampling point). Each sample must be taken at the same sampling point unless conditions make another sampling point more representative of each source or treatment plant.

(2) Surface water systems shall take a minimum of one sample at points in the distribution system that are representative of each source or at each entry point to the distribution system after treatment (hereafter called a sampling point). Each sample must be taken at the same sampling point unless conditions make another sampling point more representative of each source or treatment plant.

NOTE: For purposes of this paragraph, surface water systems include systems with a combination of surface and ground sources.

(3) If the system draws water from more than one source and the sources are combined before distribution, the system must sample at an entry point to the distribution system during periods of normal operating conditions (*i.e.*, when water representative of all sources is being used).

(4) *Monitoring frequency:* (i) Each community and non-transient noncommunity water system shall take four consecutive quarterly samples for each contaminant listed in §141.61(c) during each compliance period beginning with the initial compliance period.

(ii) Systems serving more than 3,300 persons which do not detect a contaminant in the initial compliance period may reduce the sampling frequency to a minimum of two quarterly samples in

one year during each repeat compliance period.

(iii) Systems serving less than or equal to 3,300 persons which do not detect a contaminant in the initial compliance period may reduce the sampling frequency to a minimum of one sample during each repeat compliance period.

(5) Each community and non-transient water system may apply to the State for a waiver from the requirement of paragraph (h)(4) of this section. A system must reapply for a waiver for each compliance period.

(6) A State may grant a waiver after evaluating the following factor(s): Knowledge of previous use (including transport, storage, or disposal) of the contaminant within the watershed or zone of influence of the system. If a determination by the State reveals no previous use of the contaminant within the watershed or zone of influence, a waiver may be granted. If previous use of the contaminant is unknown or it has been used previously, then the following factors shall be used to determine whether a waiver is granted.

(i) Previous analytical results.

(ii) The proximity of the system to a potential point or non-point source of contamination. Point sources include spills and leaks of chemicals at or near a water treatment facility or at manufacturing, distribution, or storage facilities, or from hazardous and municipal waste landfills and other waste handling or treatment facilities. Nonpoint sources include the use of pesticides to control insect and weed pests on agricultural areas, forest lands, home and gardens, and other land application uses.

(iii) The environmental persistence and transport of the pesticide or PCBs.

(iv) How well the water source is protected against contamination due to such factors as depth of the well and the type of soil and the integrity of the well casing.

(v) Elevated nitrate levels at the water supply source.

(vi) Use of PCBs in equipment used in the production, storage, or distribution of water (*i.e.*, PCBs used in pumps, transformers, etc.).

(7) If an organic contaminant listed in §141.61(c) is detected (as defined by paragraph (h)(18) of this section) in any sample, then:

(i) Each system must monitor quarterly at each sampling point which resulted in a detection.

(ii) The State may decrease the quarterly monitoring requirement specified in paragraph (h)(7)(i) of this section provided it has determined that the system is reliably and consistently below the maximum contaminant level. In no case shall the State make this determination unless a groundwater system takes a minimum of two quarterly samples and a surface water system takes a minimum of four quarterly samples.

(iii) After the State determines the system is reliably and consistently below the maximum contaminant level the State may allow the system to monitor annually. Systems which monitor annually must monitor during the quarter that previously yielded the highest analytical result.

(iv) Systems which have 3 consecutive annual samples with no detection of a contaminant may apply to the State for a waiver as specified in paragraph (h)(6) of this section.

(v) If the monitoring results in detection of one or more of certain related contaminants (heptachlor and heptachlor epoxide), then subsequent monitoring shall analyze for all related contaminants.

(8) Systems which violate the requirements of §141.61(c) as determined by paragraph (h)(11) of this section must monitor quarterly. After a minimum of four quarterly samples show the system is in compliance and the State determines the system is reliably and consistently below the MCL, as specified in paragraph (h)(11) of this section, the system shall monitor at the frequency specified in paragraph (h)(7)(iii) of this section.

(9) The State may require a confirmation sample for positive or negative results. If a confirmation sample is required by the State, the result must be averaged with the first sampling result and the average used for the compliance determination as specified by paragraph (h)(11) of this section. States have discretion to delete results of obvious sampling errors from this calculation.

(10) The State may reduce the total number of samples a system must analyze by allowing the use of compositing. Composite samples from a maximum of five sampling points are allowed, provided that the detection limit of the method used for analysis is less than one-fifth of the MCL. Compositing of samples must be done in the laboratory and analyzed within 14 days of sample collection.

(i) If the concentration in the composite sample detects one or more contaminants listed in §141.61(c), then a follow-up sample must be taken within 14 days at each sampling point included in the composite, and be analyzed for that contaminant.

(ii) If duplicates of the original sample taken from each sampling point used in the composite sample are available, the system may use these instead of resampling. The duplicates must be analyzed and the results reported to the State within 14 days after completion of the composite analysis or before the holding time for the initial sample is exceeded whichever is sooner.

(iii) If the population served by the system is >3,300 persons, then compositing may only be permitted by the State at sampling points within a single system. In systems serving ≤3,300 persons, the State may permit compositing among different systems provided the 5-sample limit is maintained.

(11) Compliance with §141.61(c) shall be determined based on the analytical results obtained at each sampling point. If one sampling point is in violation of an MCL, the system is in violation of the MCL.

(i) For systems monitoring more than once per year, compliance with the MCL is determined by a running annual average at each sampling point.

(ii) Systems monitoring annually or less frequently whose sample result exceeds the regulatory detection level as defined by paragraph (h)(18) of this section must begin quarterly sampling. The system will not be considered in violation of the MCL until it has completed one year of quarterly sampling.

(iii) If any sample result will cause the running annual average to exceed the MCL at any sampling point, the system is out of compliance with the MCL immediately.

(iv) If a system fails to collect the required number of samples, compliance will be based on the total number of samples collected.

(v) If a sample result is less than the detection limit, zero will be used to calculate the annual average.

(12) [Reserved]

(13) Analysis for PCBs shall be conducted as follows using the methods in paragraph (e) of this section:

(i) Each system which monitors for PCBs shall analyze each sample using either Method 508.1, 525.2, 508 or 505. Users of Method 505 may have more difficulty in achieving the required Aroclor detection limits than users of Methods 508.1, 525.2 or 508.

(ii) If PCBs (as one of seven Aroclors) are detected (as designated in this paragraph) in any sample analyzed using Method 505 or 508, the system shall reanalyze the sample using Method 508A to quantitate PCBs (as decachlorobiphenyl).

Aroclor	Detection limit (mg/l)
1016	0.00008
1221	0.02
1232	0.0005
1242	0.0003
1248	0.0001
1254	0.0001
1260	0.0002

(iii) Compliance with the PCB MCL shall be determined based upon the quantitative results of analyses using Method 508A.

(14) If monitoring data collected after January 1, 1990, are generally consistent with the requirements of §141.24(h), then the State may allow systems to use that data to satisfy the monitoring requirement for the initial compliance period beginning January 1, 1993.

(15) The State may increase the required monitoring frequency, where necessary, to detect variations within the system (e.g., fluctuations in concentration due to seasonal use, changes in water source).

(16) The State has the authority to determine compliance or initiate enforcement action based upon analytical results and other information compiled

by their sanctioned representatives and agencies.

(17) Each public water system shall monitor at the time designated by the State within each compliance period.

(18) Detection as used in this paragraph shall be defined as greater than or equal to the following concentrations for each contaminant.

Contaminant	Detection limit (mg/l)
Alachlor	.0002
Aldicarb	.0005
Aldicarb sulfoxide	.0005
Aldicarb sulfone	.0008
Atrazine	.0001
Benzo[a]pyrene	.00002
Carbofuran	.0009
Chlordane	.0002
Dalapon	.001
1,2–Dibromo–3–chloropropane (DBCP)	.00002
Di (2-ethylhexyl) adipate	.0006
Di (2-ethylhexyl) phthalate	.0006
Dinoseb	.0002
Diquat	.0004
2,4-D	.0001
Endothall	.009
Endrin	.00001
Ethylene dibromide (EDB)	.00001
Glyphosate	.006
Heptachlor	.00004
Heptachlor epoxide	.00002
Hexachlorobenzene	.0001
Hexachlorocyclopentadiene	.0001
Lindane	.00002
Methoxychlor	.0001
Oxamyl	.002
Picloram	.0001
Polychlorinated biphenyls (PCBs) (as decachlorobiphenyl)	.0001
Pentachlorophenol	.00004
Simazine	.00007
Toxaphene	.001
2,3,7,8-TCDD (Dioxin)	.000000005
2,4,5-TP (Silvex)	.0002

(19) Anaylsis under this section shall only be conducted by laboratories that have received certification by EPA or the State and have met the following conditions:

(i) To receive certification to conduct analyses for the contaminants in § 141.61(c) the laboratory must:

(A) Analyze Performance Evaluation (PE) samples provided by EPA, the State, or by a third party (with the approval of the State or EPA) at least once a year by each method for which the laboratory desires certification.

(B) For each contaminant that has been included in the PE sample achieve quantitative results on the analyses that are within the following acceptance limits:

Contaminant	Acceptance limits (percent)
DBCP	±40
EDB	±40.
Alachlor	±45.
Atrazine	±45.
Benzo[a]pyrene	2 standard deviations.
Carbofuran	±45.
Chlordane	±45.
Dalapon	2 standard deviations.
Di(2-ethylhexyl)adipate	2 standard deviations.
Di(2-ethylhexyl)phthalate	2 standard deviations.
Dinoseb	2 standard deviations.
Diquat	2 standard deviations.
Endothall	2 standard deviations.
Endrin	±30.
Glyphosate	2 standard deviations.
Heptachlor	±45.
Heptachlor epoxide	±45.
Hexachlorobenzene	2 standard deviations.
Hexachloro- cyclopentadiene	2 standard deviations.
Lindane	±45.
Methoxychlor	±45.
Oxamyl	2 standard deviations.
PCBs (as Decachlorobiphenyl)	0–200.
Picloram	2 standard deviations.
Simazine	2 standard deviations.
Toxaphene	±45.
Aldicarb	2 standard deviations.
Aldicarb sulfoxide	2 standard deviations.
Aldicarb sulfone	2 standard deviations.
Pentachlorophenol	±50.
2,3,7,8-TCDD (Dioxin)	2 standard deviations.
2,4-D	±50.
2,4,5-TP (Silvex)	±50.

(ii) [Reserved]

(20) All new systems or systems that use a new source of water that begin operation after January 22, 2004 must demonstrate compliance with the MCL within a period of time specified by the State. The system must also comply with the initial sampling frequencies specified by the State to ensure a system can demonstrate compliance with the MCL. Routine and increased monitoring frequencies shall be conducted in accordance with the requirements in this section.

(Approved by the Office of Management and Budget under control number 2040–0090)

[40 FR 59570, Dec. 24, 1975]

EDITORIAL NOTE: For FEDERAL REGISTER citations affecting § 141.24, see the List of CFR Sections Affected, which appears in the Finding Aids section of the printed volume and at *www.govinfo.gov*.

§ 141.25 Analytical methods for radioactivity.

(a) Analysis for the following contaminants shall be conducted to determine compliance with § 141.66 (radioactivity) in accordance with the methods

in the following table, or the alternative methods listed in appendix A to subpart C this part, or their equivalent determined by EPA in accordance with § 141.27.

Contaminant	Methodology	Reference (Method of Page Number)								
		EPA [1]	EPA [2]	EPA [3]	EPA [4]	SM [5]	ASTM [6]	USGS [7]	DOE [8]	Other
Naturally Occurring:										
Gross alpha [11] and beta	Evaporation	900.0	p. 1	00–01	p. 1	302, 7110 B, 7110 B–00.		R–1120–76.		
Gross alpha [11]	Coprecipitation			00–02		7110 C, 7110 C–00.				
Radium 226	Radon emanation	903.1	p. 16	Ra–04	p. 19	305, 7500–Ra C, 7500–Ra C–01.	D3454–97	R–1141–76	Ra-04	NY [9],
	Radiochemical	903.0	p. 13	Ra-03		304, 7500–Ra B, 7500–Ra B–01.	D2460–97	R–1140–76		GA [14]
Radium 228	Radiochemical	904.0	p. 24	Ra-05	p. 19	7500–Ra D, 7500–Ra D–01.		R–1142–76		NY [9], NJ [10], GA [14]
Uranium [12]	Radiochemical	908.0				7500–U B, 7500–U B–00.				
	Fluorometric	908.1				7500–U C (17th Ed.).	D2907–97	R–1180–76, R–1181–76.	U–04.	
	ICP–MS	200.8 [13]				3125	D5673–03.			
	Alpha Spectrometry.			00–07	p. 33	7500–U C (18th, 19th, or 20th Ed.), 7500–U C–00.	D3972–97, 02.	R–1182–76	U–02.	
	Laser Phosphorimetry.						D5174–97, 02.			
Man-Made:										
Radioactive Cesium	Radiochemical	901.0	p. 4			7500–Cs B, 7500–Cs B–00.	D2459–72	R–1111–76.		
	Gamma Ray Spectrometry.	901.1			p. 92	7120, 7120–97.	D3649–91, 98a.	R–1110–76	4.5.2.3.	
Radioactive Iodine	Radiochemical	902.0	p. 6			7500–I B, 7500–I B–00.				
			p. 9			7500–I C, 7500–I C–00.				

Contaminant	Methodology	Reference (Method of Page Number)								
		EPA [1]	EPA [2]	EPA [3]	EPA [4]	SM [5]	ASTM [6]	USGS [7]	DOE [8]	Other
						7500–I D, 7500–I D–00.	D3649–91, 98a.			
	Gamma Ray Spectrometry.	901.1	.....	.....	p. 92	7120, 7120–97.	D4785–93, 00a.	.....	4.5.2.3.	
Radioactive Strontium 89, 90.	Radiochemical	905.0	p. 29	Sr–04	p. 65	303, 7500–Sr B, 7500–Sr B–01.	.....	R–1160–76	Sr–01, Sr–02.	
Tritium	Liquid Scintillation	906.0	p. 34	H–02 ..	p. 87	306, 7500–^{3}H B, 7500–^{3}H B–00.	D4107–91, 98 (Reapproved 2002).	R–1171–76.		
Gamma Emitters	Gamma Ray Spectrometry.	901.1	.....	.....	p. 92	7120, 7120–97.	D3649–91, 98a.	R–1110–76	Ga–01–R.	
		902.0	.....	.....	.....	7500–Cs B, 7500–Cs B–00.	D4785–93, 00a.			
		901.0	.....	.....	.....	7500–I B, 7500–I B–00.				

The procedures shall be done in accordance with the documents listed below. The incorporation by reference of documents 1 through 10 and 13 through 14 was approved by the Director of the Federal Register in accordance with 5 U.S.C. 552(a) and 1 CFR part 51. Copies of the documents may be obtained from the sources listed below. Information regarding obtaining these documents can be obtained from the Safe Drinking Water Hotline at 800–426–4791. Documents may be inspected at EPA's Drinking Water Docket, EPA West, 1301 Constitution Avenue, NW., Room 3334 , Washington, DC 20460 (Telephone: 202–566–2426); or at the National Archives and Records Administration (NARA). For information on the availability of this material at NARA, call 202–741–6030, or go to: *http://www.archives.gov/federal_register/code_of_federal_regulations/ibr_locations.html.*

[1] "Prescribed Procedures for the Measurement of Radioactivity in Drinking Water," EPA 600/4–80–032, August 1980. Available at the U.S. Department of Commerce, National Technical Information Service (NTIS), 5285 Port Royal Road, Springfield, VA 22161 (Telephone 800–553–6847), PB 80–224744.

[2] "Interim Radiochemical Methodology for Drinking Water," EPA 600/4–75–008 (revised), March 1976. Available NTIS, ibid.

[3] "Radiochemistry Procedures Manual," EPA 520/5–84–006, December 1987. Available NTIS, ibid.

[4] "Radiochemical Analytical Procedures for Analysis of Environmental Samples," March 1979. Available at NTIS, ibid. EMSL LV 053917.

[5] "Standard Methods for the Examination of Water and Wastewater," 13th, 17th, 18th, 19th or 20th edition, 1971, 1989, 1992, 1995, 1998. Available at American Public Health Association, 1015 Fifteenth Street, NW., Washington, DC 20005. Methods 302, 303, 304, 305 and 306 are only in the 13th edition. Methods 7110B, 7500–Ra B, 7500–Ra C, 7500–Ra D, 7500–U B, 7500–Cs B, 7500–I B, 7500–I C, 7500–I D, 7500–Sr B, and 7500–^{3}H B are in the 17th, 18th, 19th and 20th editions. Method 7110 C is in the 18th, 19th and 20th editions. Method 7500–U C Fluorometric Uranium is only in the 17th Edition, and 7500–U C Alpha spectrometry is only in the 18th, 19th and 20th editions. Method 7120 is only in the 19th and 20th editions. Method 3125 is only in the 20th edition. Methods 7110 B–00, 7110 C–00, 7500–Ra B–01, 7500–Ra C–01, 7500–Ra D–01, 7500–U B–00, 7500–U C–00, 7500–I B–00, 7500–I C–00, 7500–I D–00, 7120–97, 7500–Sr B–01, and 7500–^{3}H B–00 are available online at *http://www.standardmethods.org.* The year in which each method was approved by the Standard Methods Committee is designated by the last two digits in the method number. The methods listed are the only online versions that may be used.

[6] *Annual Book of ASTM Standards,* Vol. 11.01 and 11.02, 2002; ASTM International; any year containing the cited version of the method may be used. Copies of these two volumes and the 2003 version of D 5673–03 may be obtained from ASTM International, 100 Barr Harbor Drive, P.O. Box C700, West Conshohocken, PA 19428–2959.

[7] "Methods for Determination of Radioactive Substances in Water and Fluvial Sediments," Chapter A5 in Book 5 of *Techniques of Water-Resources Investigations of the United States Geological Survey,* 1977. Available at U.S. Geological Survey (USGS) Information Services, Box 25286, Federal Center, Denver, CO 80225–0425.

[8] "EML Procedures Manual," 28th (1997) or 27th (1990) Editions, Volumes 1 and 2; either edition may be used. In the 27th Edition Method Ra-04 is listed as Ra-05 and Method Ga-01–R is listed as Sect. 4.5.2.3. Available at the Environmental Measurements Laboratory, U.S. Department of Energy (DOE), 376 Hudson Street, New York, NY 10014–3621.

[9] "Determination of Ra–226 and Ra–228 (Ra–02)," January 1980, Revised June 1982. Available at Radiological Sciences Institute for Laboratories and Research, New York State Department of Health, Empire State Plaza, Albany, NY 12201.

[10] "Determination of Radium 228 in Drinking Water,'' August 1980. Available at State of New Jersey, Department of Environmental Protection, Division of Environmental Quality, Bureau of Radiation and Inorganic Analytical Services, 9 Ewing Street, Trenton, NJ 08625.

[11] Natural uranium and thorium-230 are approved as gross alpha calibration standards for gross alpha with co-precipitation and evaporation methods; americium-241 is approved with co-precipitation methods.

[12] If uranium (U) is determined by mass, a 0.67 pCi/μg of uranium conversion factor must be used. This conversion factor is based on the 1:1 activity ratio of U–234 and U–238 that is characteristic of naturally occurring uranium.

[13] "Determination of Trace Elements in Waters and Wastes by Inductively Coupled Plasma-Mass Spectrometry," Revision 5.4, which is published in "Methods for the Determination of Metals in Environmental Samples—Supplement I,"' EPA 600–R–94–111, May 1994. Available at NTIS, PB 95–125472.

[14] "The Determination of Radium-226 and Radium-228 in Drinking Water by Gamma-ray Spectrometry Using HPGE or Ge(Li) Detectors," Revision 1.2, December 2004. Available from the Environmental Resources Center, Georgia Institute of Technology, 620 Cherry Street, Atlanta, GA 30332–0335, USA, Telephone: 404–894–3776. This method may be used to analyze for radium-226 and radium-228 in samples collected after January 1, 2005 to satisfy the radium-226 and radium-228 monitoring requirements specified at 40 CFR 141.26.

(b) When the identification and measurement of radionuclides other than those listed in paragraph (a) of this section is required, the following references are to be used, except in cases where alternative methods have been approved in accordance with § 141.27.

(1) *Procedures for Radiochemical Analysis of Nuclear Reactor Aqueous Solutions*, H. L. Krieger and S. Gold, EPA-R4–73–014. USEPA, Cincinnati, Ohio, May 1973.

(2) *HASL Procedure Manual*, Edited by John H. Harley. HASL 300, ERDA Health and Safety Laboratory, New York, NY., 1973.

(c) For the purpose of monitoring radioactivity concentrations in drinking water, the required sensitivity of the radioanalysis is defined in terms of a detection limit. The detection limit shall be that concentration which can be counted with a precision of plus or minus 100 percent at the 95 percent confidence level (1.96σ where σ is the standard deviation of the net counting rate of the sample).

(1) To determine compliance with § 141.66(b), (c), and (e) the detection limit shall not exceed the concentrations in Table B to this paragraph.

TABLE B—DETECTION LIMITS FOR GROSS ALPHA PARTICLE ACTIVITY, RADIUM 226, RADIUM 228, AND URANIUM

Contaminant	Detection limit
Gross alpha particle activity	3 pCi/L.
Radium 226	1 pCi/L.
Radium 228	1 pCi/L.
Uranium	1 µg/L

(2) To determine compliance with § 141.66(d) the detection limits shall not exceed the concentrations listed in Table C to this paragraph.

TABLE C—DETECTION LIMITS FOR MAN-MADE BETA PARTICLE AND PHOTON EMITTERS

Radionuclide	Detection limit
Tritium	1,000 pCi/1.
Strontium–89	10 pCi/1.
Strontium–90	2 pCi/1.
Iodine–131	1 pCi/1.
Cesium–134	10 pCi/1.
Gross beta	4 pCi/1.
Other radionuclides	1/10 of the applicable limit.

(d) To judge compliance with the maximum contaminant levels listed in § 141.66, averages of data shall be used and shall be rounded to the same number of significant figures as the maximum contaminant level for the substance in question.

(e) The State has the authority to determine compliance or initiate enforcement action based upon analytical results or other information compiled by their sanctioned representatives and agencies.

[41 FR 28404, July 9, 1976, as amended at 45 FR 57345, Aug. 27, 1980; 62 FR 10173, Mar. 5, 1997; 65 FR 76745, Dec. 7, 2000; 67 FR 65250, Oct. 23, 2002; 69 FR 38855, June 29, 2004; 69 FR 52180, Aug. 25, 2004; 72 FR 11245, Mar. 12, 2007; 74 FR 30958, June 29, 2009]

§ 141.26 Monitoring frequency and compliance requirements for radionuclides in community water systems.

(a) *Monitoring and compliance requirements for gross alpha particle activity, radium-226, radium-228, and uranium.* (1) Community water systems (CWSs) must conduct initial monitoring to determine compliance with § 141.66(b), (c), and (e) by December 31, 2007. For the purposes of monitoring for gross alpha particle activity, radium-226, radium-228, uranium, and beta particle and photon radioactivity in drinking water, ''detection limit'' is defined as in § 141.25(c).

(i) *Applicability and sampling location for existing community water systems or sources.* All existing CWSs using ground water, surface water or systems using both ground and surface water (for the purpose of this section hereafter referred to as systems) must sample at every entry point to the distribution system that is representative of all sources being used (hereafter called a sampling point) under normal operating conditions. The system must take each sample at the same sampling point unless conditions make another sampling point more representative of each source or the State has designated a distribution system location, in accordance with paragraph (a)(2)(ii)(C) of this section.

(ii) *Applicability and sampling location for new community water systems or sources.* All new CWSs or CWSs that use a new source of water must begin to conduct initial monitoring for the new source within the first quarter after

initiating use of the source. CWSs must conduct more frequent monitoring when ordered by the State in the event of possible contamination or when changes in the distribution system or treatment processes occur which may increase the concentration of radioactivity in finished water.

(2) *Initial monitoring:* Systems must conduct initial monitoring for gross alpha particle activity, radium-226, radium-228, and uranium as follows:

(i) Systems without acceptable historical data, as defined below, must collect four consecutive quarterly samples at all sampling points before December 31, 2007.

(ii) *Grandfathering of data:* States may allow historical monitoring data collected at a sampling point to satisfy the initial monitoring requirements for that sampling point, for the following situations.

(A) To satisfy initial monitoring requirements, a community water system having only one entry point to the distribution system may use the monitoring data from the last compliance monitoring period that began between June 2000 and December 8, 2003.

(B) To satisfy initial monitoring requirements, a community water system with multiple entry points and having appropriate historical monitoring data for each entry point to the distribution system may use the monitoring data from the last compliance monitoring period that began between June 2000 and December 8, 2003.

(C) To satisfy initial monitoring requirements, a community water system with appropriate historical data for a representative point in the distribution system may use the monitoring data from the last compliance monitoring period that began between June 2000 and December 8, 2003, provided that the State finds that the historical data satisfactorily demonstrate that each entry point to the distribution system is expected to be in compliance based upon the historical data and reasonable assumptions about the variability of contaminant levels between entry points. The State must make a written finding indicating how the data conforms to the these requirements.

(iii) For gross alpha particle activity, uranium, radium-226, and radium-228 monitoring, the State may waive the final two quarters of initial monitoring for a sampling point if the results of the samples from the previous two quarters are below the detection limit.

(iv) If the average of the initial monitoring results for a sampling point is above the MCL, the system must collect and analyze quarterly samples at that sampling point until the system has results from four consecutive quarters that are at or below the MCL, unless the system enters into another schedule as part of a formal compliance agreement with the State.

(3) *Reduced monitoring:* States may allow community water systems to reduce the future frequency of monitoring from once every three years to once every six or nine years at each sampling point, based on the following criteria.

(i) If the average of the initial monitoring results for each contaminant (*i.e.*, gross alpha particle activity, uranium, radium-226, or radium-228) is below the detection limit specified in Table B, in §141.25(c)(1), the system must collect and analyze for that contaminant using at least one sample at that sampling point every nine years.

(ii) For gross alpha particle activity and uranium, if the average of the initial monitoring results for each contaminant is at or above the detection limit but at or below ½ the MCL, the system must collect and analyze for that contaminant using at least one sample at that sampling point every six years. For combined radium-226 and radium-228, the analytical results must be combined. If the average of the combined initial monitoring results for radium-226 and radium-228 is at or above the detection limit but at or below ½ the MCL, the system must collect and analyze for that contaminant using at least one sample at that sampling point every six years.

(iii) For gross alpha particle activity and uranium, if the average of the initial monitoring results for each contaminant is above ½ the MCL but at or below the MCL, the system must collect and analyze at least one sample at that sampling point every three years. For combined radium-226 and radium-

228, the analytical results must be combined. If the average of the combined initial monitoring results for radium-226 and radium-228 is above ½ the MCL but at or below the MCL, the system must collect and analyze at least one sample at that sampling point every three years.

(iv) Systems must use the samples collected during the reduced monitoring period to determine the monitoring frequency for subsequent monitoring periods (e.g., if a system's sampling point is on a nine year monitoring period, and the sample result is above ½ MCL, then the next monitoring period for that sampling point is three years).

(v) If a system has a monitoring result that exceeds the MCL while on reduced monitoring, the system must collect and analyze quarterly samples at that sampling point until the system has results from four consecutive quarters that are below the MCL, unless the system enters into another schedule as part of a formal compliance agreement with the State.

(4) *Compositing:* To fulfill quarterly monitoring requirements for gross alpha particle activity, radium-226, radium-228, or uranium, a system may composite up to four consecutive quarterly samples from a single entry point if analysis is done within a year of the first sample. States will treat analytical results from the composited as the average analytical result to determine compliance with the MCLs and the future monitoring frequency. If the analytical result from the composited sample is greater than ½ MCL, the State may direct the system to take additional quarterly samples before allowing the system to sample under a reduced monitoring schedule.

(5) A gross alpha particle activity measurement may be substituted for the required radium-226 measurement provided that the measured gross alpha particle activity does not exceed 5 pCi/l. A gross alpha particle activity measurement may be substituted for the required uranium measurement provided that the measured gross alpha particle activity does not exceed 15 pCi/l. The gross alpha measurement shall have a confidence interval of 95% (1.65σ, where σ is the standard deviation of the net counting rate of the sample) for radium-226 and uranium. When a system uses a gross alpha particle activity measurement in lieu of a radium-226 and/or uranium measurement, the gross alpha particle activity analytical result will be used to determine the future monitoring frequency for radium-226 and/or uranium. If the gross alpha particle activity result is less than detection, ½ the detection limit will be used to determine compliance and the future monitoring frequency.

(b) *Monitoring and compliance requirements for beta particle and photon radioactivity*. To determine compliance with the maximum contaminant levels in § 141.66(d) for beta particle and photon radioactivity, a system must monitor at a frequency as follows:

(1) Community water systems (both surface and ground water) designated by the State as vulnerable must sample for beta particle and photon radioactivity. Systems must collect quarterly samples for beta emitters and annual samples for tritium and strontium-90 at each entry point to the distribution system (hereafter called a sampling point), beginning within one quarter after being notified by the State. Systems already designated by the State must continue to sample until the State reviews and either reaffirms or removes the designation.

(i) If the gross beta particle activity minus the naturally occurring potassium-40 beta particle activity at a sampling point has a running annual average (computed quarterly) less than or equal to 50 pCi/L (screening level), the State may reduce the frequency of monitoring at that sampling point to once every 3 years. Systems must collect all samples required in paragraph (b)(1) of this section during the reduced monitoring period.

(ii) For systems in the vicinity of a nuclear facility, the State may allow the CWS to utilize environmental surveillance data collected by the nuclear facility in lieu of monitoring at the system's entry point(s), where the State determines if such data is applicable to a particular water system. In the event that there is a release from a nuclear facility, systems which are using surveillance data must begin monitoring at the community water

system's entry point(s) in accordance with paragraph (b)(1) of this section.

(2) Community water systems (both surface and ground water) designated by the State as utilizing waters contaminated by effluents from nuclear facilities must sample for beta particle and photon radioactivity. Systems must collect quarterly samples for beta emitters and iodine-131 and annual samples for tritium and strontium-90 at each entry point to the distribution system (hereafter called a sampling point), beginning within one quarter after being notified by the State. Systems already designated by the State as systems using waters contaminated by effluents from nuclear facilities must continue to sample until the State reviews and either reaffirms or removes the designation.

(i) Quarterly monitoring for gross beta particle activity shall be based on the analysis of monthly samples or the analysis of a composite of three monthly samples. The former is recommended.

(ii) For iodine-131, a composite of five consecutive daily samples shall be analyzed once each quarter. As ordered by the State, more frequent monitoring shall be conducted when iodine-131 is identified in the finished water.

(iii) Annual monitoring for strontium-90 and tritium shall be conducted by means of the analysis of a composite of four consecutive quarterly samples or analysis of four quarterly samples. The latter procedure is recommended.

(iv) If the gross beta particle activity minus the naturally occurring potassium-40 beta particle activity at a sampling point has a running annual average (computed quarterly) less than or equal to 15 pCi/L (screening level), the State may reduce the frequency of monitoring at that sampling point to every 3 years. Systems must collect the same type of samples required in paragraph (b)(2) of this section during the reduced monitoring period.

(v) For systems in the vicinity of a nuclear facility, the State may allow the CWS to utilize environmental surveillance data collected by the nuclear facility in lieu of monitoring at the system's entry point(s), where the State determines if such data is applicable to a particular water system. In the event that there is a release from a nuclear facility, systems which are using surveillance data must begin monitoring at the community water system's entry point(s) in accordance with paragraph (b)(2) of this section.

(3) Community water systems designated by the State to monitor for beta particle and photon radioactivity can not apply to the State for a waiver from the monitoring frequencies specified in paragraph (b)(1) or (b)(2) of this section.

(4) Community water systems may analyze for naturally occurring potassium-40 beta particle activity from the same or equivalent sample used for the gross beta particle activity analysis. Systems are allowed to subtract the potassium-40 beta particle activity value from the total gross beta particle activity value to determine if the screening level is exceeded. The potassium-40 beta particle activity must be calculated by multiplying elemental potassium concentrations (in mg/L) by a factor of 0.82.

(5) If the gross beta particle activity minus the naturally occurring potassium-40 beta particle activity exceeds the appropriate screening level, an analysis of the sample must be performed to identify the major radioactive constituents present in the sample and the appropriate doses must be calculated and summed to determine compliance with §141.66(d)(1), using the formula in §141.66(d)(2). Doses must also be calculated and combined for measured levels of tritium and strontium to determine compliance.

(6) Systems must monitor monthly at the sampling point(s) which exceed the maximum contaminant level in §141.66(d) beginning the month after the exceedance occurs. Systems must continue monthly monitoring until the system has established, by a rolling average of 3 monthly samples, that the MCL is being met. Systems who establish that the MCL is being met must return to quarterly monitoring until they meet the requirements set forth in paragraph (b)(1)(i) or (b)(2)(iv) of this section.

(c) *General monitoring and compliance requirements for radionuclides.* (1) The

State may require more frequent monitoring than specified in paragraphs (a) and (b) of this section, or may require confirmation samples at its discretion. The results of the initial and confirmation samples will be averaged for use in compliance determinations.

(2) Each public water systems shall monitor at the time designated by the State during each compliance period.

(3) *Compliance:* Compliance with §141.66 (b) through (e) will be determined based on the analytical result(s) obtained at each sampling point. If one sampling point is in violation of an MCL, the system is in violation of the MCL.

(i) For systems monitoring more than once per year, compliance with the MCL is determined by a running annual average at each sampling point. If the average of any sampling point is greater than the MCL, then the system is out of compliance with the MCL.

(ii) For systems monitoring more than once per year, if any sample result will cause the running average to exceed the MCL at any sample point, the system is out of compliance with the MCL immediately.

(iii) Systems must include all samples taken and analyzed under the provisions of this section in determining compliance, even if that number is greater than the minimum required.

(iv) If a system does not collect all required samples when compliance is based on a running annual average of quarterly samples, compliance will be based on the running average of the samples collected.

(v) If a sample result is less than the detection limit, zero will be used to calculate the annual average, unless a gross alpha particle activity is being used in lieu of radium-226 and/or uranium. If the gross alpha particle activity result is less than detection, ½ the detection limit will be used to calculate the annual average.

(4) States have the discretion to delete results of obvious sampling or analytic errors.

(5) If the MCL for radioactivity set forth in §141.66 (b) through (e) is exceeded, the operator of a community water system must give notice to the State pursuant to §141.31 and to the public as required by subpart Q of this part.

[65 FR 76745, Dec. 7, 2000, as amended at 69 FR 38855, June 29, 2004]

§141.27 Alternate analytical techniques.

(a) With the written permission of the State, concurred in by the Administrator of the U.S. EPA, an alternate analytical technique may be employed. An alternate technique shall be accepted only if it is substantially equivalent to the prescribed test in both precision and accuracy as it relates to the determination of compliance with any MCL. The use of the alternate analytical technique shall not decrease the frequency of monitoring required by this part.

[45 FR 57345, Aug. 27, 1980]

§141.28 Certified laboratories.

(a) For the purpose of determining compliance with §141.21 through 141.27, 141.30, 141.40, 141.74, 141.89 and 141.402, samples may be considered only if they have been analyzed by a laboratory certified by the State except that measurements of alkalinity, calcium, conductivity, disinfectant residual, orthophosphate, pH, silica, temperature and turbidity may be performed by any person acceptable to the State.

(b) Nothing in this part shall be construed to preclude the State or any duly designated representative of the State from taking samples or from using the results from such samples to determine compliance by a supplier of water with the applicable requirements of this part.

[45 FR 57345, Aug. 27, 1980; 47 FR 10999, Mar. 12, 1982, as amended at 59 FR 34323, July 1, 1994; 64 FR 67465, Dec. 1, 1999; 71 FR 65651, Nov. 8, 2006]

§141.29 Monitoring of consecutive public water systems.

When a public water system supplies water to one or more other public water systems, the State may modify the monitoring requirements imposed by this part to the extent that the interconnection of the systems justifies treating them as a single system for monitoring purposes. Any modified

monitoring shall be conducted pursuant to a schedule specified by the State and concurred in by the Administrator of the U.S. Environmental Protection Agency.

APPENDIX A TO SUBPART C OF PART 141—ALTERNATIVE TESTING METHODS APPROVED FOR ANALYSES UNDER THE SAFE DRINKING WATER ACT

Only the editions stated in the following table are approved.

ALTERNATIVE TESTING METHODS FOR CONTAMINANTS LISTED AT 40 CFR 141.21(f)(3)

Organism	Methodology	SM 21st Edition [1]	SM 22nd Edition [28]	SM Online [3]	Other
Total Coliforms	Total Coliform Fermentation Technique.	9221 A, B	9221 A, B	9221 A,B–06.	
	Total Coliform Membrane Filter Technique.	9222 A, B, C.			
	Presence-Absence (P–A) Coliform Test.	9221 D.			
	ONPG–MUG Test	9223	9223 B	9223 B–04.	
	Colitag™				Modified Colitag™ [13]
	Tecta EC/TC [33]				

ALTERNATIVE TESTING METHODS FOR CONTAMINANTS LISTED AT 40 CFR 141.21(f)(5)

Organism	Methodology	SM 22nd Edition [28]	SM Online [3]
Fecal Coliforms	Fecal Coliform Procedure	9221 E	9221 E–06

ALTERNATIVE TESTING METHODS FOR CONTAMINANTS LISTED AT 40 CFR 141.21(f)(6)

Organism	Methodology	SM 20th Edition [6]	SM 21st Edition [1]	SM 22nd Edition [28]	SM Online [3]	Other
E.coli	ONPG–MUG Test	9223 B	9223 B	9223 B	9223 B–97, B–04	
	Colitag™					Modified Colitag™ [13]
	Tecta EC/TC [33]					

ALTERNATIVE TESTING METHODS FOR CONTAMINANTS LISTED AT 40 CFR 141.23(k)(1)

Contaminant	Methodology	EPA method	SM 21st edition [1]	SM 22nd edition [28]	SM 23rd edition [49]	SM Online [3]	ASTM [4]	Other
Alkalinity	Titrimetric		2320 B	2320 B	2320 B		D1067–06 B, 11 B, 16 B	
Antimony	Hydride—Atomic Absorption						D 3697–07, –12	
	Atomic Absorption; Furnace		3113 B	3113 B	3113 B	3113 B–04, B–10		
	Axially viewed inductively coupled plasma-atomic emission spectrometry (AVICP–AES).	200.5, Revision 4.2 [2]						
Arsenic	Atomic Absorption; Furnace		3113 B	3113 B	3113 B	3113 B–04, B–10.	D 2972–08 C, –15 C	
	Hydride Atomic Absorption		3114 B	3114 B	3114 B	3114 B–09	D 2972–08 B, –15 B.	
	Axially viewed inductively coupled plasma-atomic emission spectrometry (AVICP–AES).	200.5, Revision 4.2 [2]						
Barium	Inductively Coupled Plasma		3120 B	3120 B	3120 B			
	Atomic Absorption; Direct		3111 D	3111 D	3111 D			
	Atomic Absorption; Furnace		3113 B	3113 B	3113 B	3113 B–04, B–10		
	Axially viewed inductively coupled plasma-atomic emission spectrometry (AVICP–AES).	200.5, Revision 4.2 [2]						
Beryllium	Inductively Coupled Plasma		3120 B	3120 B	3120 B			
	Atomic Absorption; Furnace		3113 B	3113 B	3113 B	3113 B–04, B–10.	D 3645–08 B, –15 B	
	Axially viewed inductively coupled plasma-atomic emission spectrometry (AVICP–AES).	200.5, Revision 4.2 [2]						
Cadmium	Atomic Absorption; Furnace		3113 B	3113 B	3113 B	3113 B–04, B–10		
	Axially viewed inductively coupled plasma-atomic emission spectrometry (AVICP–AES).	200.5, Revision 4.2 [2]						
Calcium	EDTA titrimetric		3500–Ca B	3500–Ca B	3500–Ca B		D 511–09, –14 A	
	Atomic Absorption; Direct Aspiration		3111 B	3111 B	3111 B		D 511–09, –14 B	

	Inductively Coupled Plasma		3120 B	3120 B	3120 B			
	Axially viewed inductively coupled plasma-atomic emission spectrometry (AVICP–AES).	200.5, Revision 4.2 [2]						
	Ion Chromatography						D 6919–09	
Chromium	Inductively Coupled Plasma		3120 B	3120 B	3120 B			
	Atomic Absorption; Furnace		3113 B	3113 B	3113 B	3113 B–04, B–10		
	Axially viewed inductively coupled plasma-atomic emission spectrometry (AVICP–AES).	200.5, Revision 4.2 [2]						
Copper	Atomic Absorption; Furnace		3113 B	3113 B	3113 B	3113 B–04, B–10.	D 1688–07, –12 C	
	Atomic Absorption; Direct Aspiration		3111 B	3111 B	3111 B		D 1688–07, –12 A	
	Inductively Coupled Plasma		3120 B	3120 B	3120 B			
	Axially viewed inductively coupled plasma-atomic emission spectrometry (AVICP–AES).	200.5, Revision 4.2 [2]						
	Colorimetry							Hach Method 8026; [35] Hach Method 10272. [36]
Conductivity	Conductance		2510 B	2510 B	2510 B		D 1125–14 A	
Cyanide	Manual Distillation with $MgCl_2$ followed by:.		4500–CN$^-$ C	4500–CN$^-$ C	4500–CN$^-$ C	4500–CN$^-$ C–99.	D 2036–06 A	
	Spectrophotometric, Amenable		4500–CN$^-$ G.	4500–CN$^-$ G.	4500–CN$^-$ G.		D 2036–06 B	
	Spectrophotometric Manual		4500–CN$^-$ E	4500–CN$^-$ E	4500–CN$^-$ E		D2036–06 A	
	Selective Electrode		4500–CN$^-$ F	4500–CN$^-$ F	4500–CN$^-$ F			
	Gas Chromatography/Mass Spectrometry Headspace.							ME355.01. [7]
Fluoride	Ion Chromatography		4110 B	4110 B	4110 B		D 4327–11	
	Manual Distillation; Colorimetric SPADNS.		4500–F$^-$ B, D.	4500–F$^-$ B, D.	4500–F$^-$ B, D			
	Manual Electrode		4500–F$^-$ C	4500–F$^-$ C	4500–F$^-$ C		D 1179–04, 10 B, 16 B	
	Automated Alizarin		4500–F$^-$ E	4500–F$^-$ E	4500–F$^-$ E			
	Arsenite-Free Colorimetric SPADNS							Hach SPADNS 2 Method 10225. [22]
Lead	Atomic Absorption; Furnace		3113 B	3113 B	3113 B	3113 B–04, B–10.	D 3559–08 D, 15 D	
	Axially viewed inductively coupled plasma-atomic emission spectrometry (AVICP–AES).	200.5, Revision 4.2 [2]						
Magnesium	Atomic Absorption		3111 B	3111 B	3111 B		D 511–09, –14 B	
	Inductively Coupled Plasma		3120 B	3120 B	3120 B			
	Complexation Titrimetric Methods		3500–Mg B	3500–Mg B	3500–Mg B		D 511–09, –14 A	

ALTERNATIVE TESTING METHODS FOR CONTAMINANTS LISTED AT 40 CFR 141.23(k)(1)—Continued

Contaminant	Methodology	EPA method	SM 21st edition [1]	SM 22nd edition [28]	SM 23rd edition [49]	SM Online [3]	ASTM [4]	Other
	Axially viewed inductively coupled plasma-atomic emission spectrometry (AVICP–AES).	200.5, Revision 4.2 [2]						
	Ion Chromatography						D 6919–09	
Mercury	Manual, Cold Vapor		3112 B	3112 B	3112 B	3112 B–09	D 3223–12	
Nickel	Inductively Coupled Plasma		3120 B	3120 B	3120 B			
	Atomic Absorption; Direct		3111 B	3111 B	3111 B			
	Atomic Absorption; Furnace		3113 B	3113 B	3113 B	3113 B–04, B–10		
	Axially viewed inductively coupled plasma-atomic emission spectrometry (AVICP–AES).	200.5, Revision 4.2 [2]						
Nitrate	Ion Chromatography		4110 B	4110 B	4110 B		D 4327–11	
	Automated Cadmium Reduction		4500–NO_3^- F.	4500–NO_3^- F.	4500–NO_3^- F			
	Manual Cadmium Reduction		4500–NO_3^- E.	4500–NO_3^- E.	4500–NO_3^- E			
	Ion Selective Electrode		4500–NO_3^- D.	4500–NO_3^- D.	4500–NO_3^- D			
	Reduction/Colorimetric							Systea Easy (1-Reagent); [8] NECi Nitrate-Reductase.[40]
	Colorimetric; Direct							Hach TNTplus™ 835/836 Method 10206.[23]
	Capillary Ion Electrophoresis						D 6508–15	
Nitrite	Ion Chromatography		4110 B	4110 B	4110 B		D 4327–11	
	Automated Cadmium Reduction		4500–NO_3^- F.	4500–NO_3^- F.	4500–NO_3^- F			
	Manual Cadmium Reduction		4500–NO_3^- E.	4500–NO_3^- E.	4500–NO_3^- E			
	Spectrophotometric		4500–NO_2^- B.	4500–NO_2^- B.	4500–NO_2^- B			
	Reduction/Colorimetric							Systea Easy (1-Reagent); [8] NECi Nitrate-Reductase.[40]
	Capillary Ion Electrophoresis						D 6508–15	
Ortho-phosphate	Ion Chromatography		4110 B	4110 B	4110 B		D 4327–11	
	Colorimetric, ascorbic acid, single reagent.		4500–P E	4500–P E	4500–P E	4500–P E–99		
	Colorimetric, Automated, Ascorbic Acid.		4500–P F	4500–P F	4500–P F	4500–P F–99		Thermo Fisher Discrete Analyzer.[41]

	Capillary Ion Electrophoresis						D 6508–15	
pH	Electrometric	150.3[48]	4500–H+ B	4500–H+ B	4500–H+ B		D 1293–12	
Selenium	Hydride-Atomic Absorption		3114 B	3114 B	3114 B	3114 B–09	D 3859–08 A, –15 A	
	Atomic Absorption; Furnace		3113 B	3113 B	3113 B	3113 B–04, B–10.	D 3859–08 B, –15 B	
	Axially viewed inductively coupled plasma-atomic emission spectrometry (AVICP–AES).	200.5, Revision 4.2[2]						
Silica	Colorimetric						D859–05, 10, 16	
	Molybdosilicate		4500–SiO_2 C	4500–SiO_2 C	4500–SiO_2 C			
	Heteropoly blue		4500–SiO_2 D	4500–SiO_2 D	4500–SiO_2 D			
	Automated for Molybdate-reactive Silica.		4500–SiO_2 E	4500–SiO_2 E	4500–SiO_2 E			
	Axially viewed inductively coupled plasma-atomic emission spectrometry (AVICP–AES).	200.5, Revision 4.2[2]						
	Inductively Coupled Plasma		3120 B	3120 B	3120 B			
Sodium	Atomic Absorption; Direct Aspiration		3111 B	3111 B	3111 B			
	Axially viewed inductively coupled plasma-atomic emission spectrometry (AVICP–AES).	200.5, Revision 4.2[2]						
	Ion Chromatography						D 6919–09	
Temperature	Thermometric		2550	2550	2550	2550–10		

ALTERNATIVE TESTING METHODS FOR CONTAMINANTS LISTED AT 40 CFR 141.24(e)(1)

Contaminant	Methodology	EPA method	SM 21st edition[1]	SM 22nd edition,[28] SM 23rd edition[49]	SM online[3]
Benzene	Purge &Trap/Gas Chromatography/Mass Spectrometry	524.3,[9] 524.4.[29]			
Carbon tetrachloride	Purge &Trap/Gas Chromatography/Mass Spectrometry	524.3,[9] 524.4.[29]			
Chlorobenzene	Purge &Trap/Gas Chromatography/Mass Spectrometry	524.3,[9] 524.4.[29]			
1,2-Dichlorobenzene	Purge &Trap/Gas Chromatography/Mass Spectrometry	524.3,[9] 524.4.[29]			
1,4-Dichlorobenzene	Purge &Trap/Gas Chromatography/Mass Spectrometry	524.3,[9] 524.4.[29]			
1,2-Dichloroethane	Purge &Trap/Gas Chromatography/Mass Spectrometry	524.3,[9] 524.4.[29]			
cis-Dichloroethylene	Purge &Trap/Gas Chromatography/Mass Spectrometry	524.3,[9] 524.4.[29]			
trans-Dichloroethylene.	Purge &Trap/Gas Chromatography/Mass Spectrometry	524.3,[9] 524.4.[29]			
Dichloromethane	Purge &Trap/Gas Chromatography/Mass Spectrometry	524.3,[9] 524.4.[29]			
1,2-Dichloropropane	Purge &Trap/Gas Chromatography/Mass Spectrometry	524.3,[9] 524.4.[29]			
Ethylbenzene	Purge &Trap/Gas Chromatography/Mass Spectrometry	524.3,[9] 524.4.[29]			
Styrene	Purge &Trap/Gas Chromatography/Mass Spectrometry	524.3,;[9] 524.4.[29]			
Tetrachloroethylene	Purge &Trap/Gas Chromatography/Mass Spectrometry	524.3,[9] 524.4.[29]			
1,1,1-Trichloroethane	Purge &Trap/Gas Chromatography/Mass Spectrometry	524.3,[9] 524.4.[29]			

ALTERNATIVE TESTING METHODS FOR CONTAMINANTS LISTED AT 40 CFR 141.24(e)(1)—Continued

Contaminant	Methodology	EPA method	SM 21st edition [1]	SM 22nd edition,[28] SM 23rd edition [49]	SM online [3]
Trichloroethylene	Purge &Trap/Gas Chromatography/Mass Spectrometry	524.3,[9] 524.4.[29]			
Toluene	Purge &Trap/Gas Chromatography/Mass Spectrometry	524.3,[9] 524.4.[29]			
1,2,4-Trichlorobenzene.	Purge &Trap/Gas Chromatography/Mass Spectrometry	524.3,[9] 524.4.[29]			
1,1-Dichloroethylene	Purge &Trap/Gas Chromatography/Mass Spectrometry	524.3,[9] 524.4.[29]			
1,1,2-Trichlorethane	Purge &Trap/Gas Chromatography/Mass Spectrometry	524.3,[9] 524.4.[29]			
Vinyl chloride	Purge &Trap/Gas Chromatography/Mass Spectrometry	524.3,[9] 524.4.[29]			
Xylenes (total)	Purge &Trap/Gas Chromatography/Mass Spectrometry	524.3,[9] 524.4.[29]			
2,4-D	Gas Chromatography/Electron Capture Detection (GC/ECD)		6640 B	6640 B	6640 B–01, B–06.
2,4,5-TP (Silvex)	Gas Chromatography/Electron Capture Detection (GC/ECD)		6640 B	6640 B	6640 B–01, B–06.
Alachlor	Solid Phase Extraction/Gas Chromatography/Mass Spectrometry (GC/MS).	525.3.[24]			
Atrazine	Liquid Chromatography Electrospray Ionization Tandem Mass Spectrometry (LC/ESI–MS/MS).	536.[25]			
	Solid Phase Extraction/Gas Chromatography/Mass Spectrometry (GC/MS).	525.3,[24]523.[26].			
Benzo(a)pyrene	Solid Phase Extraction/Gas Chromatography/Mass Spectrometry (GC/MS).	525.3.[24]			
Carbofuran	High-performance liquid chromatography (HPLC) with post-column derivatization and fluorescence detection.		6610 B	6610 B	6610 B–04.
Chlordane	Solid Phase Extraction/Gas Chromatography/Mass Spectrometry (GC/MS).	525.3.[24]			
Dalapon	Ion Chromatography Electrospray Ionization Tandem Mass Spectrometry (IC–ESI–MS/MS).	557.[14]			
	Gas Chromatography/Electron Capture Detection (GC/ECD)		6640 B	6640 B	6640 B–01, B–06.
Di(2-ethylhexyl)adipate.	Solid Phase Extraction/Gas Chromatography/Mass Spectrometry (GC/MS).	525.3.[24]			
Di(2-ethylhexyl)phthalate.	Solid Phase Extraction/Gas Chromatography/Mass Spectrometry (GC/MS).	525.3.[24]			
Dibromochloropropane (DBCP).	Purge &Trap/Gas Chromatography/Mass Spectrometry	524.3.[9]			
Dinoseb	Gas Chromatography/Electron Capture Detection (GC/ECD)		6640 B	6640 B	6640 B–01, B–06.
Endrin	Solid Phase Extraction/Gas Chromatography/Mass Spectrometry (GC/MS).	525.3.[24]			
Ethyl dibromide (EDB).	Purge &Trap/Gas Chromatography/Mass Spectrometry	524.3.[9]			

Glyphosate	High-Performance Liquid Chromatography (HPLC) with Post-Column Derivatization and Fluorescence Detection.		6651 B	6651 B	6651 B–00, B–05.
Heptachlor	Solid Phase Extraction/Gas Chromatography/Mass Spectrometry (GC/MS).	525.3.[24]			
Heptachlor Epoxide	Solid Phase Extraction/Gas Chromatography/Mass Spectrometry (GC/MS).	525.3.[24]			
Hexachlorobenzene	Solid Phase Extraction/Gas Chromatography/Mass Spectrometry (GC/MS).	525.3.[24]			
Hexachlorocyclopentadiene.	Solid Phase Extraction/Gas Chromatography/Mass Spectrometry (GC/MS).	525.3.[24]			
Lindane	Solid Phase Extraction/Gas Chromatography/Mass Spectrometry (GC/MS).	525.3.[24]			
Methoxychlor	Solid Phase Extraction/Gas Chromatography/Mass Spectrometry (GC/MS).	525.3.[24]			
Oxamyl	High-performance liquid chromatography (HPLC) with post-column derivatization and fluorescence detection.		6610 B	6610 B	6610 B–04.
PCBs (as Aroclors)	Solid Phase Extraction/Gas Chromatography/Mass Spectrometry (GC/MS).	525.3.[24]			
Pentachlorophenol	Gas Chromatography/Electron Capture Detection (GC/ECD)		6640 B	6640 B	6640 B–01, B–06.
	Solid Phase Extraction/Gas Chromatography/Mass Spectrometry (GC/MS)	525.3.[24]			
Picloram	Gas Chromatography/Electron Capture Detection (GC/ECD)		6640 B	6640 B	6640 B–01, B–06.
Simazine	Liquid Chromatography Electrospray Ionization Tandem Mass Spectrometry (LC/ESI–MS/MS).	536.[25]			
	Solid Phase Extraction/Gas Chromatography/Mass Spectrometry (GC/MS).	525.3,[24]523.[26]			
Toxaphene	Solid Phase Extraction/Gas Chromatography/Mass Spectrometry (GC/MS).	525.3.[24]			
Total Trihalomethanes.	Purge &Trap/Gas Chromatography/Mass Spectrometry	524.3,[9]524.4[29].			

ALTERNATIVE TESTING METHODS FOR CONTAMINANTS LISTED AT 40 CFR 141.25(a)

Contaminant	Methodology	EPA method	SM 21st edition [1]	SM 22nd edition,[28] SM 23rd edition [49]	ASTM [4]	SM Online [3]
Naturally Occurring:						
Gross alpha and beta.	Evaporation	900.0, Rev. 1.0 [50]	7110 B	7110 B.		
	Liquid Scintillation				D 7283–17	7110 D–17.
Gross alpha	Coprecipitation		7110 C	7110 C.		

ALTERNATIVE TESTING METHODS FOR CONTAMINANTS LISTED AT 40 CFR 141.25(a)—Continued

Contaminant	Methodology	EPA method	SM 21st edition [1]	SM 22nd edition,[28] SM 23rd edition [49]	ASTM [4]	SM Online [3]
Radium 226	Radon emanation		7500–Ra C	7500–Ra C	D 3454–05.	
	Radiochemical		7500–Ra B	7500–Ra B	D 2460–07.	
	Gamma Spectrometry			7500–Ra E		7500–Ra E–07.
Radium 228	Radiochemical		7500–Ra D	7500–Ra D.		
	Gamma Spectrometry			7500Ra–E		7500–Ra E–07.
Uranium	Radiochemical		7500–U B	7500–U B.		
	ICP–MS		3125		D 5673–05, 10, 16.	
	Alpha spectrometry		7500–U C	7500–U C	D 3972–09.	
	Laser Phosphorimetry				D 5174–07.	
	Alpha Liquid Scintillation Spectrometry.				D 6239–09.	
Man-Made:						
Radioactive Cesium	Radiochemical		7500–Cs B	7500–Cs B.		
	Gamma Ray Spectrometry.		7120	7120	D 3649–06.	
Radioactive Iodine	Radiochemical		7500–I B	7500–I B	D 3649–06.	
			7500–I C	7500–I C.		
			7500–I D	7500–I D.		
	Gamma Ray Spectrometry.		7120	7120	D 4785–08.	
Radioactive Strontium 89, 90.	Radiochemical		7500–Sr B	7500–Sr B.		
Tritium	Liquid Scintillation		7500–^{3}H B	7500–^{3}H B	D 4107–08.	
Gamma Emitters	Gamma Ray		7120	7120	D 3649–06.	
	Spectrometry		7500–Cs B	7500–Cs B	D 4785–08.	
			7500–I B	7500–I B.		

ALTERNATIVE TESTING METHODS FOR CONTAMINANTS LISTED AT 40 CFR 141.74(a)(1)

Organism	Methodology	SM 21st edition [1]	SM 22nd edition [28]	SM 23rd edition [49]	SM Online [3]	Other
Total Coliform	Total Coliform Fermentation Technique.	9221 A, B, C	9221 A, B, C	9221 A, B, C	9221 A,B,C–06.	

	Total Coliform Membrane Filter Technique.	9222 A, B, C	.....	9222 A, B, C.		
	ONPG–MUG Test	9223	9223 B	9223 B	9223 B–04.	
Fecal Coliforms	Fecal Coliform Procedure.	9221 E	9221 E	9221 E	9221 E–06.	
	Fecal Coliform Filter Procedure.	9222 D	9222 D	9222 D	9222 D–06.	
Heterotrophic bacteria	Pour Plate Method	9215 B	9215 B	9215 B	9215 B–04.	
Turbidity	Nephelometric Method.	2130 B	2130 B	2130 B	.....	Hach Method 8195, Rev. 3.0.[52]
	Laser Nephelometry (on-line).	.....	.....	.....	.....	Mitchell M5271,[10] Mitchell M5331, Rev. 1.2,[42] Lovibond PTV 6000.[46]
	LED Nephelometry (on-line).	.....	.....	.....	.....	Mitchell M5331,[11] Mitchell M5331, Rev. 1.2,[42] Lovibond PTV 2000.[45]
	LED Nephelometry (on-line).	.....	.....	.....	.....	AMI Turbiwell,[15] Lovibond PTV 1000.[44]
	LED Nephelometry (portable).	.....	.....	.....	.....	Orion AQ4500.[12]
	360° Nephelometry ...	.....	.....	.....	.....	Hach Method 10258 Rev. 1.0,[39] Hach Method 10258, Rev. 2.0.[51]

ALTERNATIVE TESTING METHODS FOR DISINFECTANT RESIDUALS LISTED AT 40 CFR 141.74(a)(2)

Residual	Methodology	SM 21st edition [1]	SM 22nd edition,[28] SM 23rd edition [49]	ASTM [4]	Other
Free Chlorine	Amperometric Titration.	4500–Cl D	4500–Cl D	D 1253–08, –14.	
	DPD Ferrous Titrimetric.	4500–Cl F	4500–Cl F.		
	DPD Colorimetric	4500–Cl G	4500–Cl G		Hach Method 10260.[31]
	Indophenol Colorimetric.				Hach Method 10241.[34]
	Syringaldazine (FACTS).	4500–Cl H	4500–Cl H.		
	On-line Chlorine Analyzer.				EPA 334.0.[16]
	Amperometric Sensor.				ChloroSense.[17]
Total Chlorine	Amperometric Titration.	4500–Cl D	4500–Cl D	D 1253–08, –14.	
	Amperometric Titration (Low level measurement).	4500–Cl E	4500–Cl E.		
	DPD Ferrous Titrimetric.	4500–Cl F	4500–Cl F.		
	DPD Colorimetric	4500–Cl G	4500–Cl G		Hach Method 10260.[31]
	Iodometric Electrode.	4500–Cl I	4500–Cl I.		
	On-line Chlorine Analyzer.				EPA 334.0.[16]
	Amperometric Sensor.				ChloroSense.[17]
Chlorine Dioxide	Amperometric Titration.	4500–ClO_2 C	4500–ClO_2 C.		
	Amperometric Titration.	4500–ClO_2 E.	4500–ClO_2 E.		
	Amperometric Sensor.				ChlordioX Plus.[32]
Ozone	Indigo Method	4500–O_3 B	4500–O_3 B.		

ALTERNATIVE TESTING METHODS FOR CONTAMINANTS LISTED AT 40 CFR 141.131(b)(1)

Contaminant	Methodology	EPA method	ASTM [4]	SM online [3]	SM 21st edition [1]	SM 22nd edition,[28] SM 23rd edition [49]	Other
TTHM	P&T/GC/MS	524.3,[9] 524.4.[29]					
HAA5	LLE (diazomethane)/GC/ECD.			6251 B–07	6251 B	6251 B.	
	Ion Chromatography Electrospray Ionization Tandem Mass Spectrometry (IC–ESI–MS/MS).	557.[14]					
	Two-Dimensional Ion Chromatography (IC) with Suppressed Conductivity Detection.						Thermo Fisher 557.1.[47]
Bromate	Two-Dimensional Ion Chromatography (IC).	302.0.[18]					
	Ion Chromatography Electrospray Ionization Tandem Mass Spectrometry (IC–ESI–MS/MS).	557.[14]					
	Chemically Suppressed Ion Chromatography.		D 6581–08 A.				
	Electrolytically Suppressed Ion Chromatography.		D 6581–08 B.				
Chlorite	Chemically Suppressed Ion Chromatography.		D 6581–08 A.				
	Electrolytically Suppressed Ion Chromatography.		D 6581–08 B.				

ALTERNATIVE TESTING METHODS FOR CONTAMINANTS LISTED AT 40 CFR 141.131(b)(1)—Continued

Contaminant	Methodology	EPA method	ASTM [4]	SM online [3]	SM 21st edition [1]	SM 22nd edition,[28] SM 23rd edition [49]	Other
Chlorite—daily monitoring as prescribed in 40 CFR 141.132(b)(2)(i)(A).	Amperometric Titration	.....	.....	.....	4500–ClO_2 E	4500–ClO_2 E.	
	Amperometric Sensor	.....	.....	.....	.....	.....	ChlordioX Plus.[32]

ALTERNATIVE TESTING METHODS FOR DISINFECTANT RESIDUALS LISTED AT 40 CFR 141.131(c)(1)

Residual	Methodology	SM 21st edition [1]	SM 22nd edition,[28] SM 23rd edition [49]	ASTM [4]	Other
Free Chlorine	Amperometric Titration	4500–Cl D	4500–Cl D	D 1253–08, –14.	
	DPD Ferrous Titrimetric	4500–Cl F	4500–Cl F.		
	DPD Colorimetric	4500–Cl G	4500–Cl G	.....	Hach Method 10260.[31]
	Indophenol Colorimetric	.....	.....	.....	Hach Method 10241.[34]
	Syringaldazine (FACTS)	4500–Cl H	4500–Cl H.		
	Amperometric Sensor	.....	.....	.....	ChloroSense.[17]
	On-line Chlorine Analyzer	.....	.....	.....	EPA 334.0.[16]
Combined Chlorine	Amperometric Titration	4500–Cl D	4500–Cl D	D 1253–08, –14.	
	DPD Ferrous Titrimetric	4500–Cl F	4500–Cl F.		
	DPD Colorimetric	4500–Cl G	4500–Cl G	.....	Hach Method 10260.[31]
Total Chlorine	Amperometric Titration	4500–Cl D	4500–Cl D	D 1253–08, –14.	
	Low level Amperometric Titration.	4500–Cl E	4500–Cl E.		
	DPD Ferrous Titrimetric	4500–Cl F	4500–Cl F.		
	DPD Colorimetric	4500–Cl G	4500–Cl G	.....	Hach Method 10260.[31]
	Iodometric Electrode	4500–Cl I	4500–Cl I.		
	Amperometric Sensor	.....	.....	.....	ChloroSense.[17]
	On-line Chlorine Analyzer	.....	.....	.....	EPA 334.0.[16]
Chlorine Dioxide	Amperometric Method II	4500–ClO_2 E	4500–ClO_2 E.		
	Amperometric Sensor	.....	.....	.....	ChlordioX Plus.[32]

ALTERNATIVE TESTING METHODS FOR DISINFECTANT RESIDUALS LISTED AT 40 CFR 141.131(c)(2), IF APPROVED BY THE STATE

Residual	Methodology	Method
Free Chlorine	Test Strips	Method D99–003[5]

ALTERNATIVE TESTING METHODS FOR PARAMETERS LISTED AT 40 CFR 141.131(d)

Parameter	Methodology	SM 21st edition [1]	SM 22nd edition [28]	SM 23rd edition [49]	SM online [3]	EPA	Other
Total Organic Carbon (TOC)	High Temperature Combustion.	5310 B	5310 B	5310 B	.....	415.3, Rev 1.2.[19]	
	Persulfate-Ultraviolet or Heated Persulfate Oxidation.	5310 C	5310 C	5310 C	.....	415.3, Rev 1.2. [19].	Hach Method 10267.[38]
	Wet Oxidation	5310 D	5310 D	.....	.....	415.3, Rev 1.2.[19]	
	Ozone Oxidation	.....	.....	.....	.....	.....	Hach Method 10261.[37]
Specific Ultraviolet Absorbance (SUVA)	Calculation using DOC and UV_{254} data.	.....	.....	.....	.....	415.3, Rev 1.2.[19]	
Dissolved Organic Carbon (DOC).	High Temperature Combustion.	5310 B	5310 B	5310 B	.....	415.3, Rev 1.2.[19]	
	Persulfate-Ultraviolet or Heated Persulfate Oxidation.	5310 C	5310 C	5310 C	.....	415.3, Rev 1.2.[19]	
	Wet Oxidation	5310 D	5310 D	.....	.....	415.3, Rev 1.2.[19]	
Ultraviolet absorption at 254 nm (UV_{254}).	Spectrophotometry	5910 B	5910 B	5910 B	5910 B–11	415.3, Rev 1.2.[19]	

ALTERNATIVE TESTING METHODS WITH MRL >0.0010 MG/L FOR MONITORING LISTED AT 40 CFR 141.132(b)(3)(ii)(B)

Contaminant	Methodology	EPA method
Bromate	Two-Dimensional Ion Chromatography (IC)	302.0 [18]
	Ion Chromatography Electrospray Ionization Tandem Mass Spectrometry (IC–ESI–MS/MS).	557 [14]

ALTERNATIVE TESTING METHODS FOR CONTAMINANTS LISTED AT 40 CFR 141.402(c)(2)

Organism	Methodology	SM 20th edition [6]	SM 21st edition [1]	SM 22nd edition [28]	SM 23rd edition [49]	SM online [3]	Other
E. coli	Colilert		9223 B	9223 B	9223 B	9223 B–97, B–04.	
	Colisure		9223 B	9223 B	9223 B	9223 B–97, B–04.	
	Colilert-18	9223 B	9223 B	9223 B	9223 B	9223 B–97, B–04.	
	Readycult®						Readycult®.[20]
	Colitag						Modified Colitag.™ [13]
	Chromocult®						Chromocult®.[21]
	EC-MUG			9221 F	9221 F	9221 F–06.	
	NA-MUG				9222 I.		
	m-ColiBlue24 Test				9222 J.		
	Tecta EC/TC [33 43]						
Enterococci	Multiple-Tube Technique					9230 B–04.	
	Membrane Filter Techniques.				9230 C.		
	Fluorogenic Substrate Enterococcus Test (using Enterolert).				9230 D.		
Coliphage	Two-Step Enrichment Presence-Absence Procedure.						Fast Phage.[30]

ALTERNATIVE TESTING METHODS FOR CONTAMINANTS LISTED AT 40 CFR 141.704(a)

Organism	Methodology	EPA Method
Cryptosporidium	*Filtration/Immunomagnetic Separation/Immunofluorescence Assay Microscopy.*	*1623.1*[27]

ALTERNATIVE TESTING METHODS FOR CONTAMINANTS LISTED AT 40 CFR 141.704(b)

Organism	Methodology	SM 20th edition[6]
E. coli	Membrane Filtration, Two Step	9222 D/9222 G

ALTERNATIVE TESTING METHODS FOR CONTAMINANTS LISTED AT 40 CFR 141.852(a)(5)

Organism	Methodology category	Method	SM 20th, 21st editions [1 6]	SM 22nd edition [28]	SM 23rd edition [49]	SM online [3]
Total Coliforms	Lactose Fermentation Methods.	Standard Total Coliform Fermentation Technique.		9221 B.1, B.2	9221 B.1, B.2, B.3, B.4.	9221 B.1, B.2–06.
		Presence-Absence (P–A) Coliform Test.			9221 D.1, D.2, D.3.	
	Membrane Filtration Methods.	Standard Total Coliform Membrane Filter Procedure using Endo Media.			9222 B, C.	
		Simultaneous Detection of Total Coliforms and *E. coli* by Dual Chromogen Membrane Filter Procedure (using mColiBlue24 medium).			9222 J.	
	Enzyme Substrate Methods	Colilert®		9223 B	9223 B	9223 B–04.
		Colisure®		9223 B	9223 B	9223 B–04.
		Colilert-18	9223 B	9223 B	9223 B	9223 B–04.
		Tecta EC/TC [33 43]				
Escherichia coli	*Escherichia coli* Procedure (following Lactose Fermentation Methods).	EC–MUG medium		9221 F.1	9221 F.1	9221 F.1–06.
	Escherichia coli Partitioning Methods (following Membrane Filtration Methods).	EC broth with MUG (EC–MUG).			9222 H.	
		NA–MUG medium			9222 I.	
	Simultaneous Detection of Total Coliforms and *E. coli* by Dual Chromogen Membrane Filter Procedure.	mColiBlue24 medium			9222 J.	
	Enzyme Substrate Methods	Colilert®		9223 B	9223 B	9223 B–04.
		Colisure®		9223 B	9223 B	9223 B–04.
		Colilert-18	9223 B	9223 B	9223 B	9223 B–04.
		Tecta EC/TC [33 43]				

ALTERNATIVE TESTING METHODS FOR CONTAMINANTS LISTED AT 40 CFR 143.4(b)

Contaminant	Methodology	EPA method	ASTM [4]	SM 21st edition [1]	SM 22nd edition,[28] SM 23rd edition [49]	SM online [3]
Aluminum	Axially viewed inductively coupled plasma-atomic emission spectrometry (AVICP–AES).	200.5, Revision 4.2.[2]				
	Atomic Absorption; Direct			3111 D	3111 D.	
	Atomic Absorption; Furnace			3113 B	3113 B	3113 B–04, B–10.
	Inductively Coupled Plasma			3120 B	3120 B.	
Chloride	Silver Nitrate Titration		D 512–04 B, 12 B.	4500–Cl^- B	4500–Cl^- B	
	Ion Chromatography		D 4327–11	4110 B	4110 B.	
	Potentiometric Titration			4500–Cl^- D	4500–Cl^- D.	
Color	Visual Comparison			2120 B	2120 B.	
Foaming Agents	Methylene Blue Active Substances (MBAS)			5540 C	5540 C.	
Iron	Axially viewed inductively coupled plasma-atomic emission spectrometry (AVICP–AES).	200.5, Revision 4.2.[2]				
	Atomic Absorption; Direct			3111 B	3111 B.	
	Atomic Absorption; Furnace			3113 B	3113 B	3113 B–04, B–10.
	Inductively Coupled Plasma			3120 B	3120 B.	
Manganese	Axially viewed inductively coupled plasma-atomic emission spectrometry (AVICP–AES).	200.5, Revision 4.2.[2]				
	Atomic Absorption; Direct			3111 B	3111 B.	
	Atomic Absorption; Furnace			3113 B	3113 B	3113 B–04, B–10.
	Inductively Coupled Plasma			3120 B	3120 B.	
Odor	Threshold Odor Test			2150 B	2150 B.	
Silver	Axially viewed inductively coupled plasma-atomic emission spectrometry (AVICP–AES).	200.5, Revision 4.2.[2]				
	Atomic Absorption; Direct			3111 B	3111 B.	
	Atomic Absorption; Furnace			3113 B	3113 B	3113 B–04, B–10.
	Inductively Coupled Plasma			3120 B	3120 B.	
Sulfate	Ion Chromatography		D 4327–11	4110 B	4110 B.	
	Gravimetric with ignition of residue			4500–SO_4^{2-} C.	4500–SO_4^{2-} C.	4500–SO_4^{2-} C–97.
	Gravimetric with drying of residue			4500–SO_4^{2-} D.	4500–SO_4^{2-} D.	4500–SO_4^{2-} D–97.

ALTERNATIVE TESTING METHODS FOR CONTAMINANTS LISTED AT 40 CFR 143.4(b)—Continued

Contaminant	Methodology	EPA method	ASTM [4]	SM 21st edition [1]	SM 22nd edition,[28] SM 23rd edition [49]	SM online [3]
	Turbidimetric method		D 516–07, 11, 16.	4500–SO_4 2^- E.	4500–SO_4 2^- E.	4500–SO_4 2^- E–97.
	Automated methylthymol blue method			4500–SO_4 2^- F.	4500–SO_4 2^- F.	4500–SO_4 2^- F–97.
Total Dissolved Solids	Total Dissolved Solids Dried at 180 deg C			2540 C	2540 C.	
Zinc	Axially viewed inductively coupled plasma-atomic emission spectrometry (AVICP–AES).	200.5, Revision 4.2.[2]				
	Atomic Absorption; Direct Aspiration			3111 B	3111 B.	
	Inductively Coupled Plasma			3120 B	3120 B.	

[1] *Standard Methods for the Examination of Water and Wastewater*, 21st edition (2005). Available from American Public Health Association, 800 I Street, NW., Washington, DC 20001–3710.

[2] EPA Method 200.5, Revision 4.2. "Determination of Trace Elements in Drinking Water by Axially Viewed Inductively Coupled Plasma-Atomic Emission Spectrometry." 2003. EPA/600/R–06/115. (Available at *http://www.epa.gov/water-research/epa-drinking-water-research-methods.*)

[3] Standard Methods Online are available at *http://www.standardmethods.org.* The year in which each method was approved by the Standard Methods Committee is designated by the last two digits in the method number. The methods listed are the only online versions that may be used.

[4] Available from ASTM International, 100 Barr Harbor Drive, West Conshohocken, PA 19428–2959 or *http://astm.org.* The methods listed are the only alternative versions that may be used.

[5] Method D99–003, Revision 3.0. "Free Chlorine Species ($HOCl^-$ and OCl^-) by Test Strip," November 21, 2003. Available from Industrial Test Systems, Inc., 1875 Langston St., Rock Hill, SC 29730.

[6] *Standard Methods for the Examination of Water and Wastewater*, 20th edition (1998). Available from American Public Health Association, 800 I Street, NW., Washington, DC 20001–3710.

[7] Method ME355.01, Revision 1.0. "Determination of Cyanide in Drinking Water by GC/MS Headspace," May 26, 2009. Available at *http://www.nemi.gov* or from James Eaton, H & E Testing Laboratory, 221 State Street, Augusta, ME 04333. (207) 287–2727.

[8] Systea Easy (1-Reagent). "Systea Easy (1-Reagent) Nitrate Method," February 4, 2009. Available at *http://www.nemi.gov* or from Systea Scientific, LLC., 900 Jorie Blvd., Suite 35, Oak Brook, IL 60523.

[9] EPA Method 524.3, Version 1.0. "Measurement of Purgeable Organic Compounds in Water by Capillary Column Gas Chromatography/Mass Spectrometry," June 2009. EPA 815–B–09–009. Available at *https://www.nemi.gov.*

[10] Mitchell Method M5271, Revision 1.1. "Determination of Turbidity by Laser Nephelometry," March 5, 2009. Available at *http://www.nemi.gov* or from Leck Mitchell, PhD, PE, 656 Independence Valley Dr., Grand Junction, CO 81507.

[11] Mitchell Method M5331, Revision 1.1. "Determination of Turbidity by LED Nephelometry," March 5, 2009. Available at *http://www.nemi.gov* or from Leck Mitchell, PhD, PE, 656 Independence Valley Dr., Grand Junction, CO 81507.

[12] Orion Method AQ4500, Revision 1.0. "Determination of Turbidity by LED Nephelometry," May 8, 2009. Available at *http://www.nemi.gov* or from Thermo Scientific, 166 Cummings Center, Beverly, MA 01915, *http://www.thermo.com.*

[13] Modified Colitag™ Method, "Modified Colitag™ Test Method for the Simultaneous Detection of *E. coli* and other Total Coliforms in Water (ATP D05–0035)," August 28, 2009. Available at *http://www.nemi.gov* or from CPI, International, 580 Skylane Boulevard, Santa Rosa, CA 95403.

[14] EPA Method 557. "Determination of Haloacetic Acids, Bromate, and Dalapon in Drinking Water by Ion Chromatography Electrospray Ionization Tandem Mass Spectrometry (IC–ESI–MS/MS)," September 2009. EPA 815–B–09–012. Available at *https://www.nemi.gov.*

[15] AMI Turbiwell, "Continuous Measurement of Turbidity Using a SWAN AMI Turbiwell Turbidimeter," August 2009. Available at *http://www.nemi.gov* or from Markus Bernasconi, SWAN Analytische Instrumente AG, Studbachstrasse 13, CH–8340 Hinwil, Switzerland.

[16] EPA Method 334.0. ''Determination of Residual Chlorine in Drinking Water Using an On-line Chlorine Analyzer,'' September 2009. EPA 815–B–09–013. Available at *https://www.nemi.gov.*

[17] ChloroSense. ''Measurement of Free and Total Chlorine in Drinking Water by Palintest ChloroSense,'' August 2009. Available at *https://www.nemi.gov* or from Palintest Ltd, 1455 Jamike Avenue (Suite 100), Erlanger, KY 41018.

[18] EPA Method 302.0. ''Determination of Bromate in Drinking Water using Two-Dimensional Ion Chromatography with Suppressed Conductivity Detection,'' September 2009. EPA 815–B–09–014. Available at *https://www.nemi.gov.*

[19] EPA 415.3, Revision 1.2. ''Determination of Total Organic Carbon and Specific UV Absorbance at 254 nm in Source Water and Drinking Water,'' September 2009. EPA/600/R–09/122. Available at *http://www.epa.gov/water-research/epa-drinking-water-research-methods.*

[20] Readycult® Method, ''Readycult® Coliforms 100 Presence/Absence Test for Detection and Identification of Coliform Bacteria and *Escherichia coli* in Finished Waters,'' January, 2007. Version 1.1. Available from EMD Millipore (division of Merck KGaA, Darmstadt, Germany), 290 Concord Road, Billerica, MA 01821.

[21] Chromocult® Method, ''Chromocult® Coliform Agar Presence/Absence Membrane Filter Test Method for Detection and Identification of Coliform Bacteria and *Escherichia coli* in Finished Waters,'' November, 2000. Version 1.0. EMD Millipore (division of Merck KGaA, Darmstadt, Germany), 290 Concord Road, Billerica, MA 01821.

[22] Hach Company. ''Hach Company SPADNS 2 (Arsenite-Free) Fluoride Method 10225—Spectrophotometric Measurement of Fluoride in Water and Wastewater,'' January 2011. 5600 Lindbergh Drive, P.O. Box 389, Loveland, Colorado 80539.

[23] Hach Company. ''Hach Company TNTplus™ 835/836 Nitrate Method 10206—Spectrophotometric Measurement of Nitrate in Water and Wastewater,'' January 2011. 5600 Lindbergh Drive, P.O. Box 389, Loveland, Colorado 80539.

[24] EPA Method 525.3. ''Determination of Semivolatile Organic Chemicals in Drinking Water by Solid Phase Extraction and Capillary Column Gas Chromatography/Mass Spectrometry (GC/MS),'' February 2012. EPA/600/R–12/010. Available at *http://www.epa.gov/water-research/epa-drinking-water-research-methods.*

[25] EPA Method 536. ''Determination of Triazine Pesticides and their Degradates in Drinking Water by Liquid Chromatography Electrospray Ionization Tandem Mass Spectrometry (LC/ESI–MS/MS),'' October 2007. EPA 815–B–07–002. Available at the National Service Center for Environmental Publications (EPA Method 536).

[26] EPA Method 523. ''Determination of Triazine Pesticides and their Degradates in Drinking Water by Gas Chromatography/Mass Spectrometry (GC/MS),'' February 2011. EPA 815–R–11–002. Available at the National Service Center for Environmental Publications (EPA Method 523).

[27] EPA Method 1623.1. ''*Cryptosporidium* and *Giardia* in Water by Filtration/IMS/FA,'' 2012. EPA–816–R–12–001. Available at the National Service Center for Environmental Publications (*www.epa.gov/nscep*). Search ''816R12001''.

[28] *Standard Methods for the Examination of Water and Wastewater,* 22nd edition (2012). Available from American Public Health Association, 800 I Street NW., Washington, DC 20001–3710.

[29] EPA Method 524.4, Version 1.0. ''Measurement of Purgeable Organic Compounds in Water by Gas Chromatography/Mass Spectrometry using Nitrogen Purge Gas,'' May 2013. EPA 815–R–13–002. Available at the National Service Center for Environmental Publications (EPA Method 524.4).

[30] Charm Sciences Inc. ''Fast Phage Test Procedure. Presence/Absence for Coliphage in Ground Water with Same Day Positive Prediction''. Version 009. November 2012. 659 Andover Street, Lawrence, MA 01843. Available at *www.charmsciences.com.*

[31] Hach Company. ''Hach Method 10260—Determination of Chlorinated Oxidants (Free and Total) in Water Using Disposable Planar Reagent-filled Cuvettes and Mesofluidic Channel Colorimetry,'' April 2013. 5600 Lindbergh Drive, P.O. Box 389, Loveland, CO 80539.

[32] ChlordioX Plus. ''Chlorine Dioxide and Chlorite in Drinking Water by Amperometry using Disposable Sensors,'' November 2013. Available from Palintest Ltd, Jamike Avenue (Suite 100), Erlanger, KY 41018.

[33] Tecta EC/TC. ''Techta™ EC/TC Medium and Techta™ Instrument: A Presence/Absence Method for the Simultaneous Detection of Total Coliforms and *Escherichia coli* (*E. coli*) in Drinking Water,'' version 1.0, May 2014. Available from Pathogen Detection Systems, Inc., 382 King Street East, Kingston, Ontario, Canada, K7K 2Y2.

[34] Hach Company. ''Hach Method 10241—Spectrophotometric Measurement of Free Chlorine (Cl_2) in Drinking Water,'' November 2015. Revision 1.2. 5600 Lindbergh Drive, P.O. Box 389, Loveland, CO 80539.

[35] Hach Company. ''Hach Method 8026—Spectrophotometric Measurement of Copper in Finished Drinking Water,'' December 2015. Revision 1.2. 5600 Lindbergh Drive, P.O. Box 389, Loveland, CO 80539.

[36] Hach Company. ''Hach Method 10272—Spectrophotometric Measurement of Copper in Finished Drinking Water,'' December 2015. Revision 1.2. 5600 Lindbergh Drive, P.O. Box 389, Loveland, CO 80539.

[37] Hach Company. ''Hach Method 10261—Total Organic Carbon in Finished Drinking Water by Catalyzed Ozone Hydroxyl Radical Oxidation Infrared Analysis,'' December 2015. Revision 1.2. 5600 Lindbergh Drive, P.O. Box 389, Loveland, CO 80539.

[38] Hach Company. ''Hach Method 10267—Spectrophotometric Measurement of Total Organic Carbon (TOC) in Finished Drinking Water,'' December 2015. Revision 1.2. 5600 Lindbergh Drive, P.O. Box 389, Loveland, CO 80539.

[39] Hach Company. "Hach Method 10258—Determination of Turbidity by 360° Nephelometry," January 2016. Revision 1.0. 5600 Lindbergh Drive, P.O. Box 389, Loveland, CO 80539.

[40] Nitrate Elimination Company, Inc. (NECi). "Method for Nitrate Reductase Nitrate-Nitrogen Analysis of Drinking Water," February 2016. Superior Enzymes, Inc., 334 Hecla Street, Lake Linden, Michigan 49945.

[41] Thermo Fisher. "Thermo Fisher Scientific Drinking Water Orthophosphate Method for Thermo Scientific Gallery Discrete Analyzer," February 2016. Revision 5. Thermo Fisher Scientific, Ratastie 2, 01620 Vantaa, Finland.

[42] Mitchell Method M5331, Revision 1.2. "Determination of Turbidity by LED or Laser Nephelometry," February 2016. Available from Leck Mitchell, Ph.D., PE, 656 Independence Valley Dr., Grand Junction, CO 81507.

[43] Tecta EC/TC. "Tecta™ EC/TC Medium and the Tecta™ Instrument: A Presence/Absence Method for the Simultaneous Detection of Total Coliforms and *Escherichia coli* (*E. coli*) in Drinking Water," version 2.0, February 2017. Available from Pathogen Detection Systems, Inc., 382 King Street East, Kingston, Ontario, Canada, K7K 2Y2.

[44] Lovibond PTV 1000. "Continuous Measurement of Drinking Water Turbidity Using a Lovibond PTV 1000 White Light LED Turbidimeter," December 2016. Revision 1.0. Available from Tintometer, Inc., 6456 Parkland Drive, Sarasota, FL 34243.

[45] Lovibond PTV 2000. "Continuous Measurement of Drinking Water Turbidity Using a Lovibond PTV 2000 660–nm LED Turbidimeter," December 2016. Revision 1.0. Available from Tintometer, Inc., 6456 Parkland Drive, Sarasota, FL 34243.

[46] Lovibond PTV 6000. "Continuous Measurement of Drinking Water Turbidity Using a Lovibond PTV 6000 Laser Turbidimeter," December 2016. Revision 1.0. Available from Tintometer, Inc., 6456 Parkland Drive, Sarasota, FL 34243.

[47] Thermo Fisher. "Thermo Fisher Method 557.1: Determination of Haloacetic Acids in Drinking Water using Two-Dimensional Ion Chromatography with Suppressed Conductivity Detection," January 2017. Version 1.0. Available from Thermo Fisher Scientific, 490 Lakeside Dr., Sunnyvale, CA 94085 (*Richard.jack@thermofisher.com*).

[48] EPA Method 150.3. "Determination of pH in Drinking Water," February 2017. EPA 815–B–17–001. Available at the National Service Center for Environmental Publications (EPA Method 150.3).

[49] *Standard Methods for the Examination of Water and Wastewater,* 23rd edition (2017). Available from American Public Health Association, 800 I Street NW, Washington, DC 20001–3710.

[50] EPA Method 900.0, Rev. 1.0. "Determination of Gross Alpha and Gross Beta in Drinking Water," February 2018. EPA 815–B–18–002. Available at the National Service Center for Environmental Publications (EPA Method 900.0 Rev 1.0).

[51] Hach Company. "Hach Method 10258—Determination of Turbidity by 360° Nephelometry," March 2018. Revision 2.0. 5600 Lindbergh Drive, P.O. Box 389, Loveland, CO 80539.

[52] Hach Company. "Hach Method 8195—Determination of Turbidity by Nephelometry," March 2018. Revision 3.0. 5600 Lindbergh Drive, P.O. Box 389, Loveland, CO 80539.

[74 FR 38353, Aug. 3, 2009, as amended at 74 FR 57914, Nov. 10, 2009; 74 FR 63069, Dec. 2, 2009; 75 FR 32299, June 8, 2010; 76 FR 37018, June 24, 2011; 77 FR 38527, June 28, 2012; 78 FR 32565, May 31, 2013; 78 FR 37463, June 21, 2013; 79 FR 35086, June 19, 2014; 79 FR 36428, June 27, 2014; 81 FR 46844, July 19, 2016; 82 FR 34867, July 27, 2017; 83 FR 51644, Oct. 12, 2018; 83 FR 54676, Oct. 31, 2018]

Subpart D—Reporting and Recordkeeping

§ 141.31 Reporting requirements.

(a) Except where a shorter period is specified in this part, the supplier of water shall report to the State the results of any test measurement or analysis required by this part within (1) The first ten days following the month in which the result is received, or (2) the first ten days following the end of the required monitoring period as stipulated by the State, whichever of these is shortest.

(b) Except where a different reporting period is specified in this part, the supplier of water must report to the State within 48 hours the failure to comply with any national primary drinking water regulation (including failure to comply with monitoring requirements) set forth in this part.

(c) The supplier of water is not required to report analytical results to the State in cases where a State laboratory performs the analysis and reports the results to the State office which would normally receive such notification from the supplier.

(d) The public water system, within 10 days of completing the public notification requirements under subpart Q of this part for the initial public notice and any repeat notices, must submit to the primacy agency a certification that it has fully complied with the public notification regulations. The public water system must include with this certification a representative copy of each type of notice distributed, published, posted, and made available to the persons served by the system and to the media.

(e) The water supply system shall submit to the State within the time stated in the request copies of any records required to be maintained under § 141.33 hereof or copies of any documents then in existence which the State or the Administrator is entitled to inspect pursuant to the authority of section 1445 of the Safe Drinking Water Act or the equivalent provisions of State law.

[40 FR 59570, Dec. 24, 1975, as amended at 45 FR 57345, Aug. 27, 1980; 65 FR 26022, May 4, 2000]

§ 141.32 [Reserved]

§ 141.33 Record maintenance.

Any owner or operator of a public water system subject to the provisions of this part shall retain on its premises or at a convenient location near its premises the following records:

(a) Records of microbiological analyses and turbidity analyses made pursuant to this part shall be kept for not less than 5 years. Records of chemical analyses made pursuant to this part shall be kept for not less than 10 years. Actual laboratory reports may be kept, or data may be transferred to tabular summaries, provided that the following information is included:

(1) The date, place, and time of sampling, and the name of the person who collected the sample;

(2) Identification of the sample as to whether it was a routine distribution system sample, check sample, raw or process water sample or other special purpose sample;

(3) Date of analysis;

(4) Laboratory and person responsible for performing analysis;

(5) The analytical technique/method used; and

(6) The results of the analysis.

(b) Records of action taken by the system to correct violations of primary drinking water regulations shall be kept for a period not less than 3 years after the last action taken with respect to the particular violation involved.

(c) Copies of any written reports, summaries or communications relating to sanitary surveys of the system conducted by the system itself, by a private consultant, or by any local, State or Federal agency, shall be kept for a period not less than 10 years after completion of the sanitary survey involved.

(d) Records concerning a variance or exemption granted to the system shall be kept for a period ending not less than 5 years following the expiration of such variance or exemption.

(e) Copies of public notices issued pursuant to subpart Q of this part and certifications made to the primacy agency pursuant to § 141.31 must be kept for three years after issuance.

(f) Copies of monitoring plans developed pursuant to this part shall be kept for the same period of time as the

records of analyses taken under the plan are required to be kept under paragraph (a) of this section, except as specified elsewhere in this part.

[40 FR 59570, Dec. 24, 1975, as amended at 65 FR 26022, May 4, 2000; 71 FR 478, Jan. 4, 2006]

§ 141.34 [Reserved]

§ 141.35 Reporting for unregulated contaminant monitoring results.

(a) *General applicability*. This section applies to any owner or operator of a public water system (PWS) required to monitor for unregulated contaminants under § 141.40(a); such owner or operator is referred to as ''you.'' This section specifies the information that must be reported to EPA prior to the commencement of monitoring and describes the process for reporting monitoring results to EPA. For the purposes of this section, PWS ''population served'' is the retail population served directly by the PWS as reported to the Federal Safe Drinking Water Information System (SDWIS/Fed); wholesale or consecutive populations are not included. For purposes of this section, the term ''finished'' means water that is introduced into the distribution system of a PWS and is intended for distribution and consumption without further treatment, except the treatment necessary to maintain water quality in the distribution system (e.g., booster disinfection, addition of corrosion control chemicals). For purposes of this section, the term ''State'' refers to the State or Tribal government entity that has jurisdiction over your PWS even if that government does not have primary enforcement responsibility for PWSs under the Safe Drinking Water Act. For purposes of this section, the term ''PWS Official'' refers to the person at your PWS who is able to function as the official spokesperson for the system's Unregulated Contaminant Monitoring Regulation (UCMR) activities; and the term ''PWS Technical Contact'' refers to the person at your PWS who is responsible for the technical aspects of your UCMR activities, such as details concerning sampling and reporting.

(b) *Reporting by all systems*. You must meet the reporting requirements of this paragraph if you meet the applicability criteria in § 141.40(a)(1) and (2).

(1) *Where to submit UCMR reporting requirement information*. Some of your reporting requirements are to be fulfilled electronically and others by mail. Information that must be submitted using EPA's electronic data reporting system must be submitted through: *https://www.epa.gov/dwucmr*. Documentation that is required to be mailed can be submitted either: To UCMR Sampling Coordinator, USEPA, Technical Support Center, 26 West Martin Luther King Drive (MS 140), Cincinnati, OH 45268; or by email at *UCMR_Sampling_Coordinator@epa.gov*. In addition, you must notify the public of the availability of unregulated contaminant monitoring data as provided in subpart Q (Public Notification) of this part (40 CFR 141.207). Community Water Systems that detect unregulated contaminants under this monitoring must also address such detections as part of their Consumer Confidence Reports, as provided in subpart O of this part (40 CFR 141.151).

(2) *Contacting EPA if your system does not meet applicability criteria or has a status change*. If you have received a letter from EPA or your State concerning your required monitoring and your system does not meet the applicability criteria for UCMR established in § 141.40(a)(1) or (2), or if a change occurs at your system that may affect your requirements under UCMR as defined in § 141.40(a)(3) through (5), you must mail or email a letter to EPA, as specified in paragraph (b)(1) of this section. The letter must be from your PWS Official and must include your PWS Identification (PWSID) Code along with an explanation as to why the UCMR requirements are not applicable to your PWS, or have changed for your PWS, along with the appropriate contact information. EPA will make an applicability determination based on your letter and in consultation with the State when necessary. You are subject to UCMR requirements unless and until you receive a letter from EPA agreeing that you do not meet the applicability criteria.

(c) *Reporting by large systems*. If you serve a population of more than 10,000

people, and meet the applicability criteria in §141.40(a)(2)(i), you must meet the reporting requirements in paragraphs (c)(1) through (8) of this section.

(1) *Contact and zip code information.* You must provide contact information by December 31, 2017, and provide updates within 30 days if this information changes. The contact information must be submitted using EPA's electronic data reporting system, as specified in paragraph (b)(1) of this section, and include the name, affiliation, mailing address, phone number, and email address for your PWS Technical Contact and your PWS Official. In addition, as a one-time reporting requirement, you must report the U.S. Postal Service Zip Code(s) for all areas being served water by your PWS.

(2) *Sampling location and inventory information.* You must provide your sampling location(s) and inventory information by December 31, 2017, using EPA's electronic data reporting system. You must submit, verify or update the following information for each sampling location, or for each approved representative sampling location (as specified in paragraph (c)(3) of this section regarding representative sampling locations): PWSID Code; PWS Name; PWS Facility Identification Code; PWS Facility Name; PWS Facility Type; Water Source Type; Sampling Point Identification Code; Sampling Point Name; and Sampling Point Type Code; (as defined in Table 1 of paragraph (e) of this section). If this information changes, you must report updates, including new sources and sampling locations that are put in use before or during the PWS' UCMR sampling period, to EPA's electronic data reporting system within 30 days of the change.

(3) *Proposed ground water representative sampling locations.* Some systems that use ground water as a source and have multiple entry points to the distribution system (EPTDSs) may propose monitoring at representative entry point(s), rather than monitor at every EPTDS, as follows:

(i) *Qualifications.* Large PWSs that have EPA- or State-approved alternate EPTDS sampling locations from a previous UCMR cycle, or as provided for under §141.23(a)(1), §141.24(f)(1), or §141.24(h)(1), may submit a copy of documentation from their State or EPA that approves their alternative sampling plan for EPTDSs. PWSs that do not have an approved alternative EPTDS sampling plan may submit a proposal to sample at representative EPTDS(s) rather than at each individual EPTDS if: They use ground water as a source; all of their well sources have either the same treatment or no treatment; and they have multiple EPTDSs from the same source, such as an aquifer. You must submit a copy of the existing alternate EPTDS sampling plan or your representative well proposal, as appropriate, April 19, 2017, as specified in paragraph (b)(1) of this section.

(ii) *Demonstration.* If you are submitting a proposal to sample at representative EPTDS(s) rather than at each individual EPTDS, you must demonstrate that any EPTDS that you select as representative of the ground water you supply from multiple wells is associated with a well that draws from the same aquifer as the wells it will represent. The proposed well must be representative of the highest annual volume producing and most consistently active wells in the representative array. If that representative well is not in use at the scheduled sampling time, you must select and sample an alternative representative well. You must submit the following information for each proposed representative sampling location: PWSID Code; PWS Name; PWS Facility Identification Code; PWS Facility Name; PWS Facility Type; Sampling Point Identification Code; and Sampling Point Name (as defined in Table 1, paragraph (e) of this section). You must also include documentation to support your proposal that the specified wells are representative of other wells. This documentation can include system-maintained well logs or construction drawings indicating that the representative well(s) is/are at a representative depth, and details of well casings and grouting; data demonstrating relative homogeneity of water quality constituents (e.g., pH, dissolved oxygen, conductivity, iron, manganese) in samples drawn from each well; and data showing that your wells are located in a limited geographic area (e.g., all wells within a 0.5

mile radius) and/or, if available, the hydrogeologic data indicating the time of travel separating the representative well from each of the individual wells it represents (e.g., all wells within a five-year time of travel delineation). Your proposal must be sent in writing to EPA, as specified in paragraph (b)(1) of this section. You must also provide a copy of this information to the State, unless otherwise directed by the State. Information about the actual or potential occurrence or non-occurrence of contaminants in an individual well, or a well's vulnerability to contamination, must not be used as a basis for selecting a representative well.

(iii) *Approval.* EPA or the State (as specified in the Partnership Agreement reached between the State and EPA) will review your proposal, coordinate any necessary changes with you, and approve the final list of EPTDSs where you will be required to monitor. Your plan will not be final until you receive written approval from EPA or the State.

(4) *Contacting EPA if your PWS has not been notified of requirements.* If you believe you are subject to UCMR requirements, as defined in §141.40(a)(1) and (2)(i), and you have not been notified by either EPA or your State by April 19, 2017, you must send a letter to EPA, as specified in paragraph (b)(1) of this section. The letter must be from your PWS Official and must include an explanation as to why the UCMR requirements are applicable to your system along with the appropriate contact information. A copy of the letter must also be submitted to the State, as directed by the State. EPA will make an applicability determination based on your letter, and in consultation with the State when necessary, and will notify you regarding your applicability status and required sampling schedule. However, if your PWS meets the applicability criteria specified in §141.40(a)(2)(i), you are subject to the UCMR monitoring and reporting requirements, regardless of whether you have been notified by the State or EPA.

(5) *Notifying EPA if your PWS cannot sample according to schedule—*

(i) *General rescheduling notification requirements.* Large systems may change their monitoring schedules up to December 31, 2017, using EPA's electronic data reporting system, as specified in paragraph (b)(1) of this section. After this date has passed, if your PWS cannot sample according to your assigned sampling schedule (e.g., because of budget constraints, or if a sampling location will be closed during the scheduled month of monitoring), you must mail or email a letter to EPA, as specified in paragraph (b)(1) of this section, prior to the scheduled sampling date. You must include an explanation of why the samples cannot be taken according to the assigned schedule, and you must provide the alternative schedule you are requesting. You must not reschedule monitoring specifically to avoid sample collection during a suspected vulnerable period. You are subject to your assigned UCMR sampling schedule or the schedule that you revised on or before December 31, 2017, unless and until you receive a letter from EPA specifying a new schedule.

(ii) *Exceptions to the rescheduling notification requirements.* For ground water sampling, if the second round of sampling will be completed five to seven months after the first sampling event, as specified in Table 2 of §141.40(a)(4)(i)(B), no notification to EPA is required. If any ground water sampling location will be non-operational for more than one month before and one month after the month in which the second sampling event is scheduled (*i.e.*, it is not possible for you to sample within the five to seven month window), you must notify EPA, as specified in paragraph (b)(1) of this section, explaining why the schedule cannot be met. You must comply with any modified schedule provided by EPA.

(6) *Reporting monitoring results.* For UCMR samples, you must report all data elements specified in Table 1 of paragraph (e) of this section, using EPA's electronic data reporting system. You also must report any changes, relative to what is currently posted, made to data elements 1 through 9 to EPA in writing, explaining the nature and purpose of the proposed change, as specified in paragraph (b)(1) of this section.

(i) *Electronic reporting system.* You are responsible for ensuring that the laboratory conducting the analysis of your unregulated contaminant monitoring samples (your laboratory) posts the analytical results to EPA's electronic reporting system. You are also responsible for reviewing, approving, and submitting those results to EPA.

(ii) *Reporting schedule.* You must ensure that your laboratory posts the data to EPA's electronic data reporting system within 120 days from the sample collection date (sample collection must occur as specified in §141.40(a)(4)). You have 60 days from when the laboratory posts the data in EPA's electronic data reporting system to review, approve, and submit the data to the State and EPA, at the Web address specified in paragraph (b)(1) of this section. If you do not electronically approve and submit the laboratory data to EPA within 60 days of the laboratory's posting data to EPA's electronic reporting system, the data will be considered approved by you and available for State and EPA review.

(7) *Only one set of results accepted.* If you report more than one set of valid results for the same sampling location and the same sampling event (for example, because you have had more than one laboratory analyze replicate samples collected under §141.40(a)(5), or because you have collected multiple samples during a single monitoring event at the same sampling location), EPA will use the highest of the reported values as the official result.

(8) *No reporting of previously collected data.* You cannot report previously collected data to meet the testing and reporting requirements for the contaminants listed in §141.40(a)(3). All analyses must be performed by laboratories approved by EPA to perform UCMR analyses using the analytical methods specified in Table 1 of §141.40(a)(3) and using samples collected according to §141.40(a)(4). Such requirements preclude the possibility of ''grandfathering'' previously collected data.

(d) *Reporting by small systems.* If you serve a population of 10,000 or fewer people, and you are notified that you have been selected for UCMR monitoring, your reporting requirements will be specified within the materials that EPA sends you, including a request for contact information, and a request for information associated with the sampling kit.

(1) *Contact and zip code information.* EPA will send you a notice requesting contact information for key individuals at your system, including name, affiliation, mailing address, phone number and email address. These individuals include your PWS Technical Contact and your PWS Official. You are required to provide this contact information within 90 days of receiving the notice from EPA as specified in paragraph (b)(1) of this section. If this contact information changes, you also must provide updates within 30 days of the change, as specified in paragraph (b)(1) of this section. In addition, as a one-time reporting requirement, you must report the U.S. Postal Service Zip Code(s) for all areas being served water by your PWS.

(2) *Reporting sampling information.* You must provide your sampling location(s) by December 31, 2017, using EPA's electronic data reporting system, as specified in paragraph (b)(1) of this section. If this information changes, you must report updates, including new sources and sampling locations that are put in use before or during the PWS' UCMR sampling period, to EPA's electronic data reporting system within 30 days of the change, as specified in paragraph (b)(1) of this section. You must record all data elements listed in Table 1 of paragraph (e) of this section on each sample form and sample bottle, as appropriate, provided to you by the UCMR Sampling Coordinator. You must send this information as specified in the instructions of your sampling kit, which will include the due date and return address. You must report any changes made in data elements 1 through 9 by emailing an explanation of the nature and purpose of the proposed change to EPA, as specified in paragraph (b)(1) of this section.

(e) *Data elements.* Table 1 defines the data elements that must be provided for UCMR monitoring.

TABLE 1—UNREGULATED CONTAMINANT MONITORING REPORTING REQUIREMENTS

Data element	Definition
1. Public Water System Identification (PWSID) Code.	The code used to identify each PWS. The code begins with the standard 2-character postal State abbreviation or Region code; the remaining 7 numbers are unique to each PWS in the State. The same identification code must be used to represent the PWS identification for all current and future UCMR monitoring.
2. Public Water System Name	Unique name, assigned once by the PWS.
3. Public Water System Facility Identification Code.	An identification code established by the State or, at the State's discretion, by the PWS, following the format of a 5-digit number unique within each PWS for each applicable facility (*i.e.,* for each source of water, treatment plant, distribution system, or any other facility associated with water treatment or delivery). The same identification code must be used to represent the facility for all current and future UCMR monitoring.
4. Public Water System Facility Name.	Unique name, assigned once by the PWS, for every facility ID (e.g., Treatment Plant).
5. Public Water System Facility Type.	That code that identifies that type of facility as either: CC = consecutive connection. DS = distribution system. IN = source water influent. SS = sampling station. TP = treatment plant. OT = other.
6. Water Source Type	The type of source water that supplies a water system facility. Systems must report one of the following codes for each sampling location: SW = surface water (to be reported for water facilities that are served entirely by a surface water source during the twelve-month period). GW = ground water (to be reported for water facilities that are served entirely by a ground water source during the twelve-month period). GU = ground water under the direct influence of surface water (to be reported for water facilities that are served all or in part by ground water under the direct influence of surface water at any time during the twelve-month sampling period), and are not served at all by surface water during this period. MX = mixed water (to be reported for water facilities that are served by a mix of surface water, ground water and/or ground water under the direct influence of surface water during the twelve-month period).
7. Sampling Point Identification Code.	An identification code established by the State, or at the State's discretion, by the PWS, that uniquely identifies each sampling point. Each sampling code must be unique within each applicable facility, for each applicable sampling location (*i.e.,* entry point to the distribution system, source water influent or distribution system sample at maximum residence time). The same identification code must be used to represent the sampling location for all current and future UCMR monitoring.
8. Sampling Point Name	Unique sample point name, assigned once by the PWS, for every sample point ID (e.g., Entry Point).
9. Sampling Point Type Code ..	A code that identifies the location of the sampling point as either: SR = source water taken from plant influent; untreated water entering the water treatment plant (*i.e.,* a location prior to any treatment). EP = entry point to the distribution system. DS = distribution system sample.
10. Disinfectant Type	All of the disinfectants/oxidants that have been added prior to the entry point to the distribution system. Please select all that apply: PEMB = Permanganate. HPXB = Hydrogen peroxide. CLGA = Gaseous chlorine. CLOF = Offsite Generated Hypochlorite (stored as a liquid form). CLON = Onsite Generated Hypochlorite. CAGC = Chloramine (formed with gaseous chlorine). CAOF = Chloramine (formed with offsite hypochlorite). CAON = Chloramine (formed with onsite hypochlorite). CLDB = Chlorine dioxide. OZON = Ozone. ULVL = Ultraviolet light. OTHD = All other types of disinfectant/oxidant. NODU = No disinfectant/oxidant used.
11. Treatment Information	Treatment information associated with the sample point. Please select all that apply: CON = Conventional (non-softening, consisting of at least coagulation/sedimentation basins and filtration). SFN = Softening. RBF = River bank filtration. PSD = Pre-sedimentation. INF = In-line filtration. DFL = Direct filtration. SSF = Slow sand filtration. BIO = Biological filtration (operated with an intention of maintaining biological activity within filter). UTR = Unfiltered treatment for surface water source.

TABLE 1—UNREGULATED CONTAMINANT MONITORING REPORTING REQUIREMENTS—Continued

Data element	Definition
	GWD = Groundwater system with disinfection only. PAC = Application of powder activated carbon. GAC = Granular activated carbon adsorption (not part of filters in CON, SCO, INF, DFL, or SSF). AIR = Air stripping (packed towers, diffused gas contactors). POB = Pre-oxidation with chlorine (applied before coagulation for CON or SFN plants or before filtration for other filtration plants). MFL = Membrane filtration. IEX = Ionic exchange. DAF = Dissolved air floatation. CWL = Clear well/finished water storage without aeration. CWA = Clear well/finished water storage with aeration. ADS = Aeration in distribution system (localized treatment). OTH = All other types of treatment. NTU = No treatment used. DKN = Do not know.
12. Disinfectant Residual Type	Disinfectant residual type in the distribution system for each HAA sample. CL2 = Chlorine (*i.e.,* originating from addition of free chlorine only). CLO2 = chlorine dioxide. CLM = Chloramines (originating from with addition of chlorine and ammonia or pre-formed chloramines). CAC = Chlorine and chloramines (if being mixed from chlorinated and chloroaminated water). NOD = No disinfectant residual.
13. Sample Collection Date	The date the sample is collected, reported as 4-digit year, 2-digit month, and 2-digit day (YYYY/MM/DD).
14. Sample Identification Code	An alphanumeric value up to 30 characters assigned by the laboratory to uniquely identify containers, or groups of containers, containing water samples collected at the same sampling location for the same sampling date.
15. Contaminant	The unregulated contaminant for which the sample is being analyzed.
16. Analytical Method Code	The identification code of the analytical method used.
17. Extraction Batch Identification Code.	Laboratory assigned extraction batch ID. Must be unique for each extraction batch within the laboratory for each method. For CCC samples report the Analysis Batch Identification Code as the value for this field. For methods without an extraction batch, leave this field null.
18. Extraction Date	Date for the start of the extraction batch (YYYY/MM/DD). For methods without an extraction batch, leave this field null.
19. Analysis Batch Identification Code.	Laboratory assigned analysis batch ID. Must be unique for each analysis batch within the laboratory for each method.
20. Analysis Date	Date for the start of the analysis batch (YYYY/MM/DD).
21. Sample Analysis Type	The type of sample collected and/or prepared, as well as the fortification level. Permitted values include: CF = concentration fortified; the concentration of a known contaminant added to a field sample reported with sample analysis types LFSM, LFSMD, LFB, CCC and QCS. CCC = continuing calibration check; a calibration standard containing the contaminant, the internal standard, and surrogate analyzed to verify the existing calibration for those contaminants. FS = field sample; sample collected and submitted for analysis under this rule. IS = internal standard; a standard that measures the relative response of contaminants. LFB = laboratory fortified blank; an aliquot of reagent water fortified with known quantities of the contaminants and all preservation compounds. LRB = laboratory reagent blank; an aliquot of reagent water treated exactly as a field sample, including the addition of preservatives, internal standards, and surrogates to determine if interferences are present in the laboratory, reagents, or other equipment. LFSM = laboratory fortified sample matrix; a UCMR field sample with a known amount of the contaminant of interest and all preservation compounds added. LFSMD = laboratory fortified sample matrix duplicate; duplicate of the laboratory fortified sample matrix. QCS = quality control sample; a sample prepared with a source external to the one used for initial calibration and CCC. The QCS is used to check calibration standard integrity. QHS = quality HAA sample; HAA sample collected and submitted for quality control purposes. SUR = surrogate standard; a standard that assesses method performance for each extraction.
22. Analytical Results—Sign	A value indicating whether the sample analysis result was: (<) ''less than'' means the contaminant was not detected, or was detected at a level below the Minimum Reporting Level. (=) ''equal to'' means the contaminant was detected at the level reported in ''Analytical Result— Measured Value.''
23. Analytical Result—Measured Value.	The actual numeric value of the analytical results for: Field samples; laboratory fortified matrix samples; laboratory fortified sample matrix duplicates; and concentration fortified.
24. Additional Value	Represents the true value or the fortified concentration for spiked samples for QC Sample Analysis Types (CCC, EQC, LFB, LFSM and LFSMD). For Sample Analysis Type FS and LRB and for IS and surrogate QC Contaminants, leave this field null.

TABLE 1—UNREGULATED CONTAMINANT MONITORING REPORTING REQUIREMENTS—Continued

Data element	Definition
25. Laboratory Identification Code.	The code, assigned by EPA, used to identify each laboratory. The code begins with the standard two-character State postal abbreviation; the remaining five numbers are unique to each laboratory in the State.
26. Sample Event Code	A code assigned by the PWS for each sample event. This will associate samples with the PWS monitoring plan to allow EPA to track compliance and completeness. Systems must assign the following codes: SEC1, SEC2, SEC3, SEC4, SEC5, SEC6, SEC7 and SEC8—represent samples collected to meet UCMR Assessment Monitoring requirements for cyanotoxins; where ''SEC1'' represents the first sampling period, ''SEC2'' the second period and so forth, for all eight sampling events. SEA1, SEA2, SEA3 and SEA4—represent samples collected to meet UCMR Assessment Monitoring requirements for the additional contaminants; where ''SEA1'' and ''SEA2'' represent the first and second sampling period for all water types; and ''SEA3'' and ''SEA4'' represent the third and fourth sampling period for SW and GU sources only.
27. Bloom Occurrence	A yes or no answer provided by the PWS for each cyanotoxin sample event. *Question:* Preceding the finished water sample collection, did you observe an algal bloom in your source waters near the intake? YES = if yes, select all the YESs that apply: YD = yes, on the day the UCMR cyanotoxin sample was collected. YW = yes, between the day the sample was taken and the past week. YM = yes, between the past week and past month. YY = yes, between the past month and past year. YP = yes, prior to the past year. NO = have never seen a bloom.
28. Cyanotoxin Occurrence	A yes or no answer provided by the PWS for each cyanotoxin sample event. *Question:* Preceding the finished water sample collection, were cyanotoxins ever detected in your source waters near the intake and prior to any treatment (based on sampling by you or another party)? YES = if yes, select all the YESs that apply: YD = yes, on the day the UCMR cyanotoxin sample was collected. YW = yes, between the day the sample was taken and the past week. YM = yes, between the past week and past month. YY = yes, between the past month and past year. YP = yes, prior to the past year. NO = have never detected cyanotoxins in source water. NS = unaware of any source water cyanotoxin sampling. Select all that apply (*i.e.,* all that were detected) if you answered YES to detecting cyanotoxins in source water: MIC = Microcystins. CYL = Cylindrospermopsin. ANA = Anatoxin-A. SAX = Saxitoxins. OTH = Other. DK = do not know.
29. Indicator of Possible Bloom—Treatment.	A yes or no answer provided by the PWS for each cyanotoxin sample event. *Question:* Preceding the finished water sample collection, did you notice any changes in your treatment system operation and/or treated water quality that may indicate a bloom in the source water? YES = if yes, select all that apply: DFR = Decrease in filter runtimes. ITF = Increase in turbidity in filtered water. ICD = Need for increased coagulant dose. TOI = Increase in taste and odor issues in finished water. IOD = Need for increase in oxidant/disinfectant dose. IDB = Increase in TTHM/HAA5 in finished water. OTH = Describe other changes. NO = no changes.
30. Indicator of Possible Bloom—Source Water Quality Parameters.	A yes or no answer provided by the PWS for each cyanotoxin sample event. *Question:* Preceding the finished water sample collection, did you observe any notable changes in source water quality parameters (if measured)? YES = if yes, select all that apply to the source water: ITP = Increase in water temperature. ITU = Increase in turbidity. IAL = Increase in alkalinity. ITO = Increase in total organic carbon. ICD = Increase in chlorine demand. IPH = Increase in pH. ICA = Increase in chlorophyll a. IPY = Increase in phycocyanin. INU = Increase in nutrients (example: nitrogen or phosphorus). OTH = Describe other changes. NO = no changes observed.

[72 FR 389, Jan. 4, 2007, as amended at 77 FR 26096, May 2, 2012; 81 FR 92684, Dec. 20, 2016]

Subpart E—Special Regulations, Including Monitoring Regulations and Prohibition on Lead Use

§ 141.40 Monitoring requirements for unregulated contaminants.

(a) *General applicability*. This section specifies the monitoring and quality control requirements that must be followed if you own or operate a public water system (PWS) that is subject to the Unregulated Contaminant Monitoring Regulation (UCMR), as specified in paragraphs (a)(1) and (2) of this section. In addition, this section specifies the UCMR requirements for State and Tribal participation. For the purposes of this section, PWS ''population served,'' ''State,'' '' PWS Official,'' ''PWS Technical Contact,'' and ''finished water'' apply as defined in §141.35(a). The determination of whether a PWS is required to monitor under this rule is based on the type of system (e.g., community water system, non-transient non-community water system, etc.), and its retail population, as indicated by SDWIS/Fed on December 31, 2015.

(1) *Applicability to transient non-community systems*. If you own or operate a transient non-community water system, you are not subject to monitoring requirements in this section.

(2) *Applicability to community water systems and non-transient non-community water systems*—(i) *Large systems*. If you own or operate a retail PWS (other than a transient non-community system) that serves more than 10,000 people, you must monitor according to the specifications in this paragraph (a)(2)(i). If you believe that your applicability status is different than EPA has specified in the notification letter that you received, or if you are subject to UCMR requirements and you have not been notified by either EPA or your State, you must report to EPA, as specified in §141.35(b)(2) or (c)(4).

(A) *Assessment monitoring*. You must monitor for the contaminants on List 1, per Table 1, UCMR Contaminant List, in paragraph (a)(3) of this section. If you serve a retail population of more than 10,000 people, you are required to perform this monitoring regardless of whether you have been notified by the State or EPA.

(B) *Screening Survey*. You must monitor for the unregulated contaminants on List 2 (Screening Survey) of Table 1, as specified in paragraph (a)(3) of this section, if your system serves 10,001 to 100,000 people and you are notified by EPA or your State that you are part of the State Monitoring Plan for Screening Survey testing. If your system serves more than 100,000 people, you are required to conduct this Screening Survey testing regardless of whether you have been notified by the State or EPA.

(C) *Pre-Screen Testing*. You must monitor for the unregulated contaminants on List 3 of Table 1, in paragraph (a)(3) of this section, if notified by your State or EPA that you are part of the Pre-Screen Testing.

(ii) *Small systems*. Small PWSs, as defined in this paragraph, will not be selected to monitor for any more than one of the three monitoring lists provided in Table 1, UCMR Contaminant List, in paragraph (a)(3) of this section. EPA will provide sample containers, provide pre-paid air bills for shipping the sampling materials, conduct the laboratory analysis, and report and review monitoring results for all small systems selected to conduct monitoring under paragraphs (a)(2)(ii)(A) through (C) of this section. If you own or operate a PWS that serves 10,000 or fewer people you must monitor as follows:

(A) *Assessment monitoring*. You must monitor for the contaminants on List 1 per Table 1, in paragraph (a)(3) of this section, if you are notified by your State or EPA that you are part of the State Monitoring Plan for Assessment Monitoring.

(B) *Screening Survey*. You must monitor for the unregulated contaminants on List 2 of Table 1, in paragraph (a)(3) of this section, if notified by your State or EPA that you are part of the State Monitoring Plan for the Screening Survey.

(C) *Pre-screen testing*. You must monitor for the contaminants on List 3 of Table 1, in paragraph (a)(3) of this section if you are notified by your State or EPA that you are part of the State Monitoring Plan for Pre-Screen Testing.

(3) *Analytes to be monitored*. Lists 1, 2, and 3 contaminants are provided in the following table:

TABLE 1—UCMR CONTAMINANT LIST

1—Contaminant	2—CAS Registry No.	3—Analytical methods [a]	4—Minimum reporting level [b]	5—Sampling location [c]	6—Period during which monitoring to be completed
List 1: Assessment Monitoring Cyanotoxin Chemical Contaminants					
"total microcystin"	N/A	EPA 546	0.3 µg/L	EPTDS	3/1/2018–11/30/2020.
anatoxin-a	64285–06–9.	EPA 545	0.03 µg/L	EPTDS	3/1/2018–11/30/2020.
cylindrospermopsin	143545–90–8.	EPA 545	0.09 µg/L	EPTDS	3/1/2018–11/30/2020.
microcystin-LA	96180–79–9.	EPA 544	0.008 µg/L	EPTDS	3/1/2018–11/30/2020.
microcystin-LF	154037–70–4.	EPA 544	0.006 µg/L	EPTDS	3/1/2018–11/30/2020.
microcystin-LR	101043–37–2.	EPA 544	0.02 µg/L	EPTDS	3/1/2018–11/30/2020.
microcystin-LY	123304–10–9.	EPA 544	0.009 µg/L	EPTDS	3/1/2018–11/30/2020.
microcystin-RR	111755–37–4.	EPA 544	0.006 µg/L	EPTDS	3/1/2018–11/30/2020.
microcystin-YR	101064–48–6.	EPA 544	0.02 µg/L	EPTDS	3/1/2018–11/30/2020.
nodularin	118399–22–7.	EPA 544	0.005 µg/L	EPTDS	3/1/2018–11/30/2020.
List 1: Assessment Monitoring Additional Chemical Contaminants					
Metals					
germanium	7440–56–4	EPA 200.8, ASTM D5673–10, SM 3125.	0.3 µg/L	EPTDS	1/1/2018–12/31/2020.
manganese	7439–96–5	EPA 200.8, ASTM D5673–10, SM 3125.	0.4 µg/L	EPTDS	1/1/2018–12/31/2020.
Pesticides and a Pesticide Manufacturing Byproduct					
alpha-hexachlorocyclohexane.	319–84–6	EPA 525.3	0.01 µg/L	EPTDS	1/1/2018–12/31/2020.
chlorpyrifos	2921–88–2	EPA 525.3	0.03 µg/L	EPTDS	1/1/2018–12/31/2020.
dimethipin	55290–64–7.	EPA 525.3	0.2 µg/L	EPTDS	1/1/2018–12/31/2020.
ethoprop	13194–48–4.	EPA 525.3	0.03 µg/L	EPTDS	1/1/2018–12/31/2020.
oxyfluorfen	42874–03–3.	EPA 525.3	0.05 µg/L	EPTDS	1/1/2018–12/31/2020.
profenofos	41198–08–7.	EPA 525.3	0.3 µg/L	EPTDS	1/1/2018–12/31/2020.
tebuconazole	107534–96–3.	EPA 525.3	0.2 µg/L	EPTDS	1/1/2018–12/31/2020.
total permethrin (cis- & trans-).	52645–53–1.	EPA 525.3	0.04 µg/L	EPTDS	1/1/2018–12/31/2020.
tribufos	78–48–8	EPA 525.3	0.07 µg/L	EPTDS	1/1/2018–12/31/2020.
Brominated Haloacetic Acid (HAA) Groups [d] [e]					
HAA5	N/A	EPA 552.3 or EPA 557.	N/A	D/DBPR HAA location.	1/1/2018–12/31/2020.
HAA6Br	N/A	EPA 552.3 or EPA 557.	N/A	D/DBPR HAA location.	1/1/2018–12/31/2020.
HAA9	N/A	EPA 552.3 or EPA 557.	N/A	D/DBPR HAA location.	1/1/2018–12/31/2020.

TABLE 1—UCMR CONTAMINANT LIST—Continued

1—Contaminant	2—CAS Registry No.	3—Analytical methods [a]	4—Minimum reporting level [b]	5—Sampling location [c]	6—Period during which monitoring to be completed
Alcohols					
1-butanol	71–36–3	EPA 541	2.0 μg/L	EPTDS	1/1/2018–12/31/2020.
2-methoxyethanol	109–86–4	EPA 541	0.4 μg/L	EPTDS	1/1/2018–12/31/2020.
2-propen-1-ol	107–18–6	EPA 541	0.5 μg/L	EPTDS	1/1/2018–12/31/2020.
Other Semivolatile Chemicals					
butylated hydroxanisole.	25013–16–5.	EPA 530	0.03 μg/L	EPTDS	1/1/2018–12/31/2020.
o-toluidine	95–53–4	EPA 530	0.007 μg/L	EPTDS	1/1/2018–12/31/2020.
quinoline	91–22–5	EPA 530	0.02 μg/L	EPTDS	1/1/2018–12/31/2020.
List 2: Screening Survey					
Reserved	Reserved	Reserved	Reserved	Reserved	Reserved.
List 3: Pre-Screen Testing					
Reserved	Reserved	Reserved	Reserved	Reserved	Reserved.

Column headings are:

1—Contaminant: The name of the contaminant to be analyzed.

2—CAS (Chemical Abstract Service) Registry Number or Identification Number: A unique number identifying the chemical contaminants.

3—Analytical Methods: Method numbers identifying the methods that must be used to test the contaminants.

4—Minimum Reporting Level (MRL): The value and unit of measure at or above which the concentration of the contaminant must be measured using the approved analytical methods. If EPA determines, after the first six months of monitoring that the specified MRLs result in excessive resampling, EPA will establish alternate MRLs and will notify affected PWSs and laboratories of the new MRLs. N/A is defined as non-applicable.

5—Sampling Location: The locations within a PWS at which samples must be collected.

6—Period During Which Monitoring to be Completed: The time period during which the sampling and testing will occur for the indicated contaminant.

[a] The analytical procedures shall be performed in accordance with the documents associated with each method, see paragraph (c) of this section.

[b] The MRL is the minimum concentration of each analyte that must be reported to EPA.

[c] With the exception of HAA monitoring, sampling must occur at entry points to the distribution system (EPTDSs), after treatment is applied, that represent each non-emergency water source in routine use over the 12-month period of monitoring. Systems that purchase water with multiple connections from the same wholesaler may select one representative connection from that wholesaler. This EPTDS sampling location must be representative of the highest annual volume connections. If the connection selected as the representative EPTDS is not available for sampling, an alternate highest volume representative connection must be sampled. See 40 CFR 141.35(c)(3) for an explanation of the requirements related to the use of representative GW EPTDSs. Sampling for UCMR 4 HAA groups must be conducted at the Disinfectants and Disinfection Byproduct Rule (D/DBPR) sampling locations (40 CFR 141.622).

[d] UCMR 4 HAA monitoring applies only to those PWSs that are subject to D/DBPR HAA5 monitoring requirements.

[e] PWSs that purchase 100 percent of their water (''consecutive systems'') are not required to collect UCMR 4 source water samples for TOC or bromide analyses. Sampling for TOC and bromide must otherwise occur at source water influent locations representing untreated water entering the water treatment plant (*i.e.,* a location prior to any treatment). SW and GWUDI systems subject to the D/DBPR TOC monitoring must use their D/DBPR TOC source water sampling site(s) from 40 CFR 141.132 for UCMR 4 TOC and bromide samples. SW and GWUDI systems that are not subject to D/DBPR TOC monitoring will use their Long Term 2 Enhance Surface Water Treatment Rule (LT2) source water sampling site(s) (40 CFR 141.703) for UCMR 4 TOC and bromide samples. Ground water systems that are subject to the D/DBPRs, and therefore subject to UCMR 4 HAA monitoring, will take TOC and bromide samples at their influents entering their treatment train. TOC and bromide must be collected at the same time as HAA samples. These indicator samples must be collected at a single source water influent using methods already approved for compliance monitoring. TOC methods include: SM 5310 B, SM 5310 C, SM 5310 D (21st edition), or SM 5310 B–00, SM 5310 C–00, SM 5310 D–00 (SM Online), EPA Method 415.3 (Rev. 1.1 or 1.2). Bromide methods include: EPA Methods 300.0 (Rev. 2.1), 300.1 (Rev. 1.0), 317.0 (Rev. 2.0), 326.0 (Rev. 1.0) or ASTM D 6581–12. The MRLs for the individual HAAs are discussed in paragraph (a)(5)(v) of this section.

(4) *Sampling requirements*—(i) *Large systems*. If you serve more than 10,000 people and meet the UCMR applicability criteria specified in paragraph (a)(2)(i) of this section, you must comply with the requirements specified in paragraphs (a)(4)(i)(A) through (I) of this section. Your samples must be collected according to the schedule that you are assigned by EPA or your State, or the schedule that you revised using EPA's electronic data reporting system on or before December 31, 2017. Your schedule must follow both the timing and frequency of monitoring specified in Tables 1 and 2 of this section.

(A) *Monitoring period*. You must collect the samples in one continuous 12-month period for List 1 Assessment Monitoring, and, if applicable, for List 2 Screening Survey, or List 3 Pre-Screen Testing, during the time frame indicated in column 6 of Table 1, in paragraph (a)(3) of this section. EPA or

your State will specify the month(s) and year(s) in which your monitoring must occur. As specified in § 141.35(c)(5), you must contact EPA if you believe you cannot conduct monitoring according to your schedule.

(B) *Frequency*. You must collect the samples within the timeframe and according to the frequency specified by contaminant type and water source type for each sampling location, as specified in Table 2, in this paragraph. For the second or subsequent round of sampling, if a sample location is nonoperational for more than one month before and one month after the scheduled sampling month (*i.e.*, it is not possible for you to sample within the window specified in Table 2, in this paragraph), you must notify EPA as specified in § 141.35(c)(5) to reschedule your sampling.

TABLE 2—MONITORING FREQUENCY BY CONTAMINANT AND WATER SOURCE TYPES

Contaminant type	Water source type	Timeframe	Frequency [1]
List 1 Cyanotoxins Chemicals.	Surface water or Ground water under the direct influence of surface water (GWUDI).	March–November.	You must monitor twice a month for four consecutive months (total of eight sampling events). Sample events must occur two weeks apart.
List 1 Contaminants—Additional Chemicals.	Surface water or GWUDI	12 months	You must monitor for four consecutive quarters. Sample events must occur three months apart. (Example: If first monitoring is in January, the second monitoring must occur any time in April, the third any time in July and the fourth any time in October).
	Ground water	12 months	You must monitor twice in a consecutive 12-month period. Sample events must occur 5–7 months apart. (Example: If the first monitoring event is in April, the second monitoring event must occur any time in September, October or November).

[1] Systems must assign a sample event code for each contaminant listed in Table 1. Sample event codes must be assigned by the PWS for each sample event. For more information on sample event codes see § 141.35(e) Table 1.

(C) *Location*. You must collect samples for each List 1 Assessment Monitoring contaminant, and, if applicable, for each List 2 Screening Survey, or List 3 Pre-Screen Testing contaminant, as specified in Table 1, in paragraph (a)(3) of this section. Samples must be collected at each sample point that is specified in column 5 and footnote c of Table 1, in paragraph (a)(3) of this section. PWSs conducting List 1 monitoring for the brominated HAA groups must collect TOC and bromide samples as specified in footnote d of Table 1, in paragraph (a)(3) of this section. If you are a GW system with multiple EPTDSs, and you request and receive approval from EPA or the State for sampling at representative EPTDS(s), as specified in § 141.35(c)(3), you must collect your samples from the approved representative sampling location(s).

(D) *Sampling instructions*. For each List 1 Assessment Monitoring contaminant, and, if applicable, for each List 2 Screening Survey, or List 3 Pre-Screen Testing contaminant, you must follow the sampling procedure for the method specified in column 3 of Table 1, in paragraph (a)(3) of this section. In addition, you must not composite (that is, combine, mix, or blend) the samples; you must collect and preserve each sample separately.

(E) *Sample collection and shipping time*. If you must ship the samples for analysis, you must collect the samples early enough in the day to allow adequate time to send the samples for overnight delivery to the laboratory. You should not collect samples on Friday, Saturday, or Sunday because sampling on these days may not allow samples to be shipped and received at the laboratory at the required temperature, unless you have made special arrangements with your laboratory to receive the samples.

(F) *Analytical methods*. For each contaminant, you must use the respective analytical methods for List 1, and, if applicable, for List 2, or List 3 that are specified in column 3 of Table 1, in paragraph (a)(3) of this section; report values at or above the minimum reporting levels for List 1, and, if applicable, for List 2 Screening Survey, or List 3 Pre-Screen Testing, that are

specified in column 4 of Table 1, in paragraph (a)(3) of this section; and conduct the quality control procedures specified in paragraph (a)(5) of this section.

(G) *Laboratory errors or sampling deviations.* If the laboratory data do not meet the required QC criteria, as specified in paragraph (a)(5) of this section, or you do not follow the required sampling procedures, as specified in paragraphs (a)(4) of this section, you must resample within 30 days of being informed or becoming aware of these facts. This resampling is not for the purpose of confirming previous results, but to correct the sampling or laboratory error. All systems must report the results obtained from the first sampling for each sampling period, except for cases of sampling or laboratory errors. For the purposes of this rule, no samples are to be recollected for the purposes of confirming the results observed in a previous sampling.

(H) *Analysis.* For the List 1 contaminants, and, if applicable, List 2 Screening Survey, or List 3 Pre-Screen Testing contaminants, identified in Table 1, paragraph (a)(3) of this section, you must arrange for testing by a laboratory that has been approved by EPA according to requirements in paragraph (a)(5)(ii) of this section.

(I) *Review and reporting of results.* After you have received the laboratory results, you must review, approve, and submit the system information, and sample collection data and test results. You must report the results as provided in § 141.35(c)(6).

(ii) *Small systems.* If you serve 10,000 or fewer people and are notified that you are part of the State Monitoring Plan for Assessment Monitoring, Screening Survey or Pre-Screen monitoring, you must comply with the requirements specified in paragraphs (a)(4)(ii)(A) through (H) of this section. If EPA or the State informs you that they will be collecting your UCMR samples, you must assist them in identifying the appropriate sampling locations and in collecting the samples.

(A) *Monitoring period and frequency.* You must collect samples at the times specified for you by the State or EPA. Your schedule must follow both the timing of monitoring specified in Table 1, List 1, and, if applicable, List 2, or List 3, and the frequency of monitoring in Table 2 of this section.

(B) *Location.* You must collect samples at the locations specified for you by the State or EPA.

(C) *Sample kits.* You must store and maintain the sample collection kits sent to you by the UCMR Sampling Coordinator in accordance with the kit's instructions. The sample kit will include all necessary containers, packing materials and cold packs, instructions for collecting the sample and sample treatment (such as dechlorination or preservation), report forms for each sample, contact name and telephone number for the laboratory, and a prepaid return shipping docket and return address label. If any of the materials listed in the kit's instructions are not included in the kit or arrive damaged, you must notify the UCMR Sampling Coordinator who sent you the sample collection kits.

(D) *Sampling instructions.* You must comply with the instructions sent to you by the State or EPA concerning the use of containers, collection (how to fill the sample bottle), dechlorination and/or preservation, and sealing and preparation of sample and shipping containers for shipment. You must not composite (that is, combine, mix, or blend) the samples. You also must collect, preserve, and test each sample separately. You must also comply with the instructions sent to you by the UCMR Sampling Coordinator concerning the handling of sample containers for specific contaminants.

(E) *Sampling deviations.* If you do not collect a sample according to the instructions provided to you for a listed contaminant, you must report the deviation within 7 days of the scheduled monitoring on the sample reporting form, as specified in § 141.35(d)(2). You must resample following instructions that you will be sent from the UCMR Sampling Coordinator or State. A copy of the form must be sent to the laboratory with the recollected samples, and to the UCMR Sampling Coordinator.

(F) [Reserved]

(G) *Sampling forms.* You must completely fill out each of the sampling forms and bottles sent to you by the

UCMR Sampling Coordinator, including data elements listed in §141.35(e) for each sample, as specified in §141.35(d)(2). You must sign and date the sampling forms.

(H) *Sample collection and shipping.* You must collect the samples early enough in the day to allow adequate time to send the samples for overnight delivery to the laboratory. You should not collect samples on Friday, Saturday, or Sunday because sampling on these days may not allow samples to be shipped and received at the laboratory at the required temperature unless you have made special arrangements with EPA for the laboratory to receive the samples. Once you have collected the samples and completely filled in the sampling forms, you must send the samples and the sampling forms to the laboratory designated on the air bill.

(iii) *Phased sample analysis for microcystins.* You must collect the three required samples (one each for EPA Methods 544, 545 and 546 (ELISA) at the EPTDS) for each sampling event, but not all samples may need to be analyzed. If the Method 546 ELISA result is less than 0.3 μg/L, report that result and do not analyze the EPA Method 544 sample for that sample event. If the Method 546 ELISA result is greater than or equal to 0.3 μg/L, report the value and analyze the other microcystin sample using EPA Method 544. You must analyze the EPA Method 545 sample for each sample event for Cylindrospermopsin and anatoxin-a only.

(5) *Quality control requirements.* If your system serves more than 10,000 people, you must ensure that the quality control requirements listed below are met during your sampling procedures and by the laboratory conducting your analyses. You must also ensure that all method quality control procedures and all UCMR quality control procedures are followed.

(i) *Sample collection/preservation.* You must follow the sample collection and preservation requirements for the specified method for each of the contaminants in Table 1, in paragraph (a)(3) of this section. These requirements specify sample containers, collection, dechlorination, preservation, storage, sample holding time, and extract storage and/or holding time that you must assure that the laboratory follow.

(ii) *Laboratory approval for Lists 1, List 2 and List 3.* To be approved to conduct UCMR testing, the laboratory must be certified under §141.28 for one or more compliance analyses; demonstrate for each analytical method it plans to use for UCMR testing that it can meet the Initial Demonstration of Capability (IDC) requirements detailed in the analytical methods specified in column 3 of Table 1, in paragraph (a)(3) of this section; and successfully participate in the UCMR Proficiency Testing (PT) Program administered by EPA for each analytical method it plans to use for UCMR testing. UCMR laboratory approval decisions will be granted on an individual method basis for the methods listed in column 3 of Table 1 in paragraph (a)(3) of this section for List 1, List 2, and List 3 contaminants. Laboratory approval is contingent upon the capability of the laboratory to post monitoring data to the EPA electronic data reporting system. To participate in the UCMR Laboratory Approval Program, the laboratory must complete and submit the necessary registration forms by February 21, 2017, and necessary application material April 19, 2017. Correspondence must be addressed to: UCMR Laboratory Approval Coordinator, USEPA, Technical Support Center, 26 West Martin Luther King Drive, (MS 140), Cincinnati, OH 45268; or emailed to EPA at: *UCMR_Sampling_Coordinator@epa.gov.*

(iii) *Minimum Reporting Level.* The MRL is an estimate of the quantitation limit. Assuming good instrumentation and experienced analysts, an MRL is achievable, with 95% confidence, by 75% of laboratories nationwide.

(A) Validation of laboratory performance. Your laboratory must be capable of quantifying each contaminant listed in Table 1, at or below the MRL specified in column 4 of Table 1, in paragraph (a)(3) of this section. You must ensure that the laboratory completes and has on file and available for your inspection, records of two distinct procedures. First, your laboratory must have conducted an IDC involving replicate analyses at or below the MRL as described in this paragraph. Second, for

each day that UCMR analyses are conducted by your laboratory, a validation of its ability to quantify each contaminant, at or below the MRL specified in column 4 of Table 1, in paragraph (a)(3) of this section, following the procedure listed in paragraph (a)(5)(iii)(B) of this section, must be performed. The procedure for initial validation of laboratory performance at or below the MRL is as follows:

(*1*) All laboratories performing analysis under UCMR must demonstrate that they are capable of meeting data quality objectives at or below the MRL listed in Table 1, column 4, in paragraph (a)(3) of this section.

(*2*) The MRL, or any concentration below the MRL, at which performance is being evaluated, must be contained within the range of calibration. The calibration curve regression model and the range of calibration levels that are used in these performance validation steps must be used in all routine sample analyses used to comply with this regulation. Only straight line or quadratic regression models are allowed. The use of either weighted or unweighted models is permitted. The use of cubic regression models is not permitted.

(*3*) Replicate analyses of at least seven (7) fortified samples in reagent water must be performed at or below the MRL for each analyte, and must be processed through the entire method procedure (*i.e.*, including extraction, where applicable, and with all preservatives).

(*4*) A prediction interval of results (PIR), which is based on the estimated arithmetic mean of analytical results and the estimated sample standard deviation of measurement results, must be determined by Equation 1:

$$\text{Equation 1} \qquad \text{PIR} = \text{Mean} \pm s \times t_{(df,\ 1-\alpha/2)} \times \sqrt{1+\frac{1}{n}}$$

Where:

t is the Student's t value with df degrees of freedom and confidence level $(1-\alpha)$,
s is the sample standard deviation of n replicate samples fortified at the MRL,
n is the number of replicates.

(*5*) The values needed to calculate the PIR using Equation 1 are: Number of replicates (n); Student's t value with a two-sided 99% confidence level for n number of replicates; the average (mean) of at least seven replicates; and the sample standard deviation. Factor 1 is referred to as the Half Range PIR (HR_{PIR}).

$$HR_{PIR} = s \times t_{(df,\ 1-\alpha/2)} \times \sqrt{1+\frac{1}{n}}$$

For a certain number of replicates and for a certain confidence level in Student's t, this factor

$$C = t_{(df,\ 1-\alpha/2)} \times \sqrt{1+\frac{1}{n}}$$

is constant, and can be tabulated according to replicate number and confidence level for the Student's t. Table 3 in this paragraph lists the constant factor (C) for replicate sample numbers 7 through 10 with a confidence level of 99% for Student's t.

(*6*) The HRPIR is calculated by Equation 2:

$$\text{Equation 2} \qquad HR_{PIR} = s \times C$$

(*7*) The PIR is calculated by Equation 3:

$$\text{Equation 3} \qquad \text{PIR} = \text{Mean} \pm HR_{PIR}$$

TABLE 3—THE CONSTANT FACTOR (C) TO BE MULTIPLIED BY THE STANDARD DEVIATION TO DETERMINE THE HALF RANGE INTERVAL OF THE PIR (STUDENT'S t 99% CONFIDENCE LEVEL) [A]

Replicates	Degrees of freedom	Constant factor (C) to be multiplied by the standard deviation
7	6	3.963
8	7	3.711
9	8	3.536
10	9	3.409

[a] The critical *t*-value for a two-sided 99% confidence interval is equivalent to the critical *t*-value for a one-sided 99.5% confidence interval, due to the symmetry of the *t*-distribution. PIR = Prediction Interval of Results.

(*8*) The lower and upper result limits of the PIR must be converted to percent recovery of the concentration being tested. To pass criteria at a certain level, the PIR lower recovery limits cannot be lower than the lower recovery limits of the QC interval (50%), and the PIR upper recovery limits cannot be greater than the upper recovery limits of the QC interval (150%). When either of the PIR recovery limits falls outside of either bound of the QC interval of recovery (higher than 150% or less than 50%), laboratory performance is not validated at the concentration evaluated. If the PIR limits are contained within both bounds of the QC interval, laboratory performance is validated for that analyte.

(B) Quality control requirements for validation of laboratory performance at or below the MRL.

(*1*) You must ensure that the calibration curve regression model and that the range of calibration levels that are used in these performance validation steps are used in future routine sample analysis. Only straight line or quadratic regression models are allowed. The use of either weighted or unweighted models is permitted. The use of cubic regression models is not permitted.

(*2*) You must ensure, once your laboratory has performed an IDC as specified in each analytical method (demonstrating that DQOs are met at or below an MRL), that a daily performance check is performed for each analyte and method. A single laboratory blank, fortified at or below the MRL for each analyte, must be processed through the entire method procedure. The measured concentration for each analyte must be converted to a percent recovery, and if the recovery is within 50%–150% (inclusive), the daily performance of the laboratory has been validated. The results for any analyte for which 50%–150% recovery cannot be demonstrated during the daily check are not valid. Laboratories may elect to re-run the daily performance check sample if the performance for any analyte or analytes cannot be validated. If performance is validated for these analytes, the laboratory performance is considered validated. Alternatively, the laboratory may re-calibrate and repeat the performance validation process for all analytes.

(iv) *Laboratory fortified sample matrix and laboratory fortified sample matrix duplicate.* You must ensure that your laboratory prepares and analyzes the Laboratory Fortified Sample Matrix (LFSM) sample for accuracy and Laboratory Fortified Sample Matrix Duplicate (LFSMD) samples for precision to determine method accuracy and precision for all contaminants in Table 1, in paragraph (a)(3) of this section. LFSM/LFSMD samples must be prepared using a sample collected and analyzed in accordance with UCMR requirements and analyzed at a frequency of 5% (or 1 LFSM/LFSMD set per every 20 samples) or with each sample batch, whichever is more frequent. In addition, the LFSM/LFSMD fortification concentrations must be alternated between a low-level fortification and mid-level fortification approximately 50% of the time. (For example: A set of 40 samples will require preparation and analysis of 2 LFSM/LFSMD paired samples. The first LFSM/LFSMD paired sample set must be fortified at

either the low-level or mid-level, and the second LFSM/LFSMD paired sample set must be fortified with the other standard, either the low-level or mid-level, whichever was not used for the initial LFSM/LFSMD paired sample set.) The low-level LFSM/LFSMD fortification concentration must be within ±50% of the MRL for each contaminant (e.g., for an MRL of 1 μg/L the acceptable fortification levels must be between 0.5 μg/L and 1.5 μg/L). The mid-level LFSM/LFSMD fortification concentration must be within ±20% of the mid-level calibration standard for each contaminant, and is to represent, where possible and where the laboratory has data from previously analyzed samples, an approximate average concentration observed in previous analyses of that analyte. There are no UCMR contaminant recovery acceptance criteria specified for LFSM/LFSMD analyses. All LFSM/LFSMD data are to be reported.

(v) *Method defined quality control.* You must ensure that your laboratory analyzes Laboratory Fortified Blanks and conducts Laboratory Performance Checks, as appropriate to the method's requirements, for those methods listed in Table 1, column 3, in paragraph (a)(3) of this section. Each method specifies acceptance criteria for these QC checks. The following HAA results must be reported using EPA's electronic data reporting system for quality control purposes.

TABLE 4—HAA QC RESULTS

1—Contaminant	2—CAS Registry No.	3—Analytical methods [a]	4—Minimum reporting level [b]	5—HAA6Br Group	6—HAA9 Group	7—HAA5 Group
Brominated Haloacetic Acid (HAA) Groups						
Bromochloroacetic acid (BCAA)	5589–96–8	EPA 552.3 or EPA 557	0.3 µg/L.			
Bromodichloroacetic acid (BDCAA).	71133–14–7	EPA 552.3 or EPA 557	0.5 µg/L.			
Chlorodibromoacetic acid (CDBAA).	5278–95–5	EPA 552.3 or EPA 557	0.3 µg/L	HAA6Br		
Tribromoacetic acid (TBAA)	75–96–7	EPA 552.3 or EPA 557	2.0 µg/L.			
Monobromoacetic acid (MBAA)	79–08–3	EPA 552.3 or EPA 557	0.3 µg/L.			
Dibromoacetic acid (DBAA)	631–64–1	EPA 552.3 or EPA 557	0.3 µg/L		HAA9	
Dichloroacetic acid (DCAA)	79–43–6	EPA 552.3 or EPA 557	0.2 µg/L.			
Monochloroacetic acid (MCAA) ..	79–11–8	EPA 552.3 or EPA 557	2.0 µg/L			HAA5
Trichloroacetic acid (TCAA)	76–03–9	EPA 552.3 or EPA 557	0.5 µg/L.			

Column headings are:

1—Contaminant: The name of the contaminant to be analyzed.

2—CAS (Chemical Abstract Service) Registry Number or Identification Number: A unique number identifying the chemical contaminants.

3—Analytical Methods: Method numbers identifying the methods that must be used to test the contaminants.

4—Minimum Reporting Level (MRL): The value and unit of measure at or above which the concentration of the contaminant must be measured using the approved analytical methods. If EPA determines, after the first six months of monitoring that the specified MRLs result in excessive resampling, EPA will establish alternate MRLs and will notify affected PWSs and laboratories of the new MRLs.

5–7—HAA groups identified in paragraph (a)(3) of this section to be monitored as UCMR contaminants.

[a] The analytical procedures shall be performed in accordance with the documents associated with each method, see paragraph (c) of this section, and must meet all quality control requirements outlined paragraph (a)(5) of this section.

[b] The MRL is the minimum concentration of each analyte that must be reported to EPA.

(vi) *Reporting*. You must require your laboratory to submit these data electronically to the State and EPA using EPA's electronic data reporting system, accessible at *https://www.epa.gov/dwucmr*, within 120 days from the sample collection date. You then have 60 days from when the laboratory posts the data to review, approve and submit the data to the State and EPA, via EPA's electronic data reporting system. If you do not electronically approve and submit the laboratory data to EPA within 60 days of the laboratory posting data to EPA's electronic reporting system, the data will be considered approved and available for State and EPA review.

(6) *Violation of this rule*—(i) *Monitoring violations*. Any failure to monitor in accordance with §141.40(a)(3)–(5) is a monitoring violation.

(ii) *Reporting violations*. Any failure to report in accordance with §141.35 is a reporting violation.

(b) *Petitions and waivers by States*—(1) *Governors' petition for additional contaminants*. The Safe Drinking Water Act allows Governors of seven (7) or more States to petition the EPA Administrator to add one or more contaminants to the UCMR Contaminant List in paragraph (a)(3) of this section. The petition must clearly identify the reason(s) for adding the contaminant(s) to the monitoring list, including the potential risk to public health, particularly any information that might be available regarding disproportional risks to the health and safety of children, the expected occurrence documented by any available data, any analytical methods known or proposed to be used to test for the contaminant(s), and any other information that could assist the Administrator in determining which contaminants present the greatest public health concern and should, therefore, be included on the UCMR Contaminant List in paragraph (a)(3) of this section.

(2) *State-wide waivers*. A State can waive monitoring requirements only with EPA approval and under very limited conditions. Conditions and procedures for obtaining a waiver are as follows:

(i) *Application*. A State may apply to EPA for a State-wide waiver from the unregulated contaminant monitoring requirements for PWSs serving more than 10,000 people. To apply for such a waiver, the State must submit an application to EPA that includes the following information: The list of contaminants on the UCMR Contaminant List for which a waiver is requested, along with documentation for each contaminant in the request demonstrating that the contaminants or their parent compounds do not occur naturally in the State, and certifying that during the past 15 years they have not been used, applied, stored, disposed of, released, or detected in the source waters or distribution systems in the State.

(ii) *Approval*. EPA will review State applications and notify the State whether it accepts or rejects the request. The State must receive written approval from EPA before issuing a State-wide waiver.

(c) *Incorporation by reference*. These standards are incorporated by reference into this section with the approval of the Director of the Federal Register under 5 U.S.C. 552(a) and 1 CFR part 51. All approved material is available for inspection either electronically at *http://www.regulations.gov*, in hard copy at the Water Docket, EPA/DC, and from the sources as follows. The Public Reading Room (EPA West, Room 3334, 1301 Constitution Ave. NW., Washington, DC) is open from 8:30 a.m. to 4:30 p.m., Monday through Friday, excluding legal holidays. The telephone number for this Public Reading Room is (202) 566–1744, and the telephone number for the Water Docket is (202) 566–2426. The material is also available for inspection at the National Archives and Records Administration (NARA). For information on the availability of this material at NARA, call (202) 741–6030 or go to *http://www.archives.gov/federal-register/cfr/about.html*.

(1) U.S. Environmental Protection Agency, Water Docket, EPA/DC, EPA West, Room 3334, 1301 Constitution Ave. NW., Washington, DC 20004.

(i) Method 200.8 ''Determination of Trace Elements in Waters and Wastes by Inductively Coupled Plasma—Mass Spectrometry,'' Revision 5.4, EMMC

Version, 1994. Available on the Internet at *https://www.nemi.gov*.

(ii) Method 300.0 ''Determination of Inorganic Anions by Ion Chromatography Samples,'' Revision 2.1, August 1993. Available on the Internet at *https://www.nemi.gov*.

(iii) Method 300.1 ''Determination of Inorganic Anions in Drinking Water by Ion Chromatography,'' Revision 1.0, 1997. Available on the Internet at *https://www.epa.gov/dwanalyticalmethods*.

(iv) Method 317.0 ''Determination of Inorganic Oxyhalide Disinfection By-Products in Drinking Water Using Ion Chromatography with the Addition of a Postcolumn Reagent for Trace Bromate Analysis,'' Revision 2.0, July 2001, EPA 815–B–01–001. Available on the Internet at *https://www.epa.gov/dwanalyticalmethods*.

(v) Method 326.0 ''Determination of Inorganic Oxyhalide Disinfection By-Products in Drinking Water Using Ion Chromatography Incorporating the Addition of a Suppressor Acidified Postcolumn Reagent for Trace Bromate Analysis,'' Revision 1.0, June 2002, EPA 815–R–03–007. Available on the Internet at *https://www.epa.gov/dwanalyticalmethods*.

(vi) Method 415.3 ''Determination of Total Organic Carbon and Specific UV Absorbance at 254 nm in Source Water and Drinking Water,'' Revision 1.1, February 2005, EPA/600/R–05/055. Available on the Internet at *https://www.epa.gov/water-research/epa-drinking-water-research-methods*.

(vii) Method 415.3 ''Determination of Total Organic Carbon and Specific UV Absorbance at 254 nm in Source Water and Drinking Water,'' Revision 1.2, September 2009, EPA/600/R–09/122. Available on the Internet at *https://www.epa.gov/water-research/epa-drinking-water-research-methods*.

(viii) Method 525.3 ''Determination of Semivolatile Organic Chemicals in Drinking Water by Solid Phase Extraction and Capillary Column Gas Chromatography/Mass Spectrometry (GC/MS),'' Version 1.0, February 2012, EPA/600/R–12/010. Available on the Internet *https://www.epa.gov/water-research/epa-drinking-water-research-methods*.

(ix) Method 530 ''Determination of Select Semivolatile Organic Chemicals in Drinking Water by Solid Phase Extraction and Gas Chromatography/Mass Spectrometry (GC/MS),'' Version 1.0, January 2015, EPA/600/R–14/442. Available on the Internet at *https://www.epa.gov/water-research/epa-drinking-water-research-methods*.

(x) EPA Method 541: ''Determination of 1-Butanol, 1,4-Dioxane, 2-Methoxyethanol and 2-Propen-1-ol in Drinking Water by Solid Phase Extraction and Gas Chromatography/Mass Spectrometry,'' November 2015, EPA 815–R–15–011. Available on the Internet at *https://www.epa.gov/water-research/epa-drinking-water-research-methods*.

(xi) Method 544 ''Determination of Microcystins and Nodularin in Drinking Water by Solid Phase Extraction and Liquid Chromatography/Tandem Mass Spectrometry (LC/MS/MS),'' Version 1.0, February 2015, EPA 600–R–14/474. Available on the Internet at *https://www.epa.gov/water-research/epa-drinking-water-research-methods*.

(xii) EPA Method 545: ''Determination of Cylindrospermopsin and Anatoxin-a in Drinking Water by Liquid Chromatography Electrospray Ionization Tandem Mass Spectrometry (LC/ESI–MS/MS),'' April 2015, EPA 815–R–15–009. Available on the Internet at *https://www.epa.gov/dwanalyticalmethods*.

(xiii) EPA Method 546: ''Determination of Total Microcystins and Nodularins in Drinking Water and Ambient Water by Adda Enzyme-Linked Immunosorbent Assay,'' August 2016, EPA–815–B–16–011. Available on the Internet at *https://www.epa.gov/dwanalyticalmethods*.

(xiv) Method 552.3 ''Determination of Haloacetic Acids and Dalapon in Drinking Water by Liquid-Liquid Microextraction, Derivatization, and Gas Chromatography with Electron Capture Detection,'' Revision 1.0, July 2003, EPA 815–B–03–002. Available on the Internet at *https://www.epa.gov/dwanalyticalmethods*.

(xv) EPA Method 557: ''Determination of Haloacetic Acids, Bromate, and Dalapon in Drinking Water by Ion Chromatography Electrospray Ionization Tandem Mass Spectrometry (IC–ESI–MS/MS),'' Version 1.0, September 2009, EPA 815–B–09–012. Available on

the Internet at *https://www.epa.gov/dwanalyticalmethods*.

(2) American Public Health Association—Standard Test Method for Elements in Water by Inductively Coupled Plasma-Mass Spectrometry,'' approved August 1, 2010. Available for purchase on the Internet at *http://www.astm.org/Standards/D5673.htm*.

(i) ''Standard Methods for the Examination of Water & Wastewater,'' 21st edition (2005).

(A) SM 3125 ''Metals by Inductively Coupled Plasma/Mass Spectrometry.''

(B) SM 5310B ''Total Organic Carbon (TOC): High-Temperature Combustion Method.''

(C) SM 5310C ''Total Organic Carbon (TOC): Persulfate-UV or Heated-Persulfate Oxidation Method.''

(D) SM 5310D ''Total Organic Carbon (TOC): Wet-Oxidation Method.''

(ii) The following methods are from ''Standard Methods Online.,'' approved 2000 (unless noted). Available for purchase on the Internet at *http://www.standardmethods.org*.

(A) SM 3125 ''Metals by Inductively Coupled Plasma/Mass Spectrometry'' Editorial revisions, 2011 (SM 3125–09).

(B) SM 5310B ''Total Organic Carbon: High-Temperature Combustion Method,'' (5310B–00).

(C) SM 5310C ''Total Organic Carbon: Persulfate-UV or Heated-Persulfate Oxidation Method,'' (5310C–00).

(D) SM 5310D ''Total Organic Carbon: Wet-Oxidation Method,'' (5310D–00).

(3) ASTM International, 100 Barr Harbor Drive, West Conshohocken, PA 19428–2959.

(i) ASTM D5673–10 ''Standard Test Method for Elements in Water by Inductively Coupled Plasma-Mass Spectrometry,'' approved August 1, 2010. Available for purchase on the Internet at *http://www.astm.org/Standards/D5673.htm*.

(ii) ASTM D6581–12 ''Standard Test Methods for Bromate, Bromide, Chlorate, and Chlorite in Drinking Water by Suppressed Ion Chromatography,'' approved March 1, 2012. Available for purchase on the Internet at *http://www.astm.org/Standards/D6581.htm*.

[72 FR 393, Jan. 4, 2007; 72 FR 3916, Jan. 26, 2007, as amended at 77 FR 26098, May 2, 2012; 81 FR 92688, Dec. 20, 2016]

§ 141.41 Special monitoring for sodium.

(a) Suppliers of water for community public water systems shall collect and analyze one sample per plant at the entry point of the distribution system for the determination of sodium concentration levels; samples must be collected and analyzed annually for systems utilizing surface water sources in whole or in part, and at least every three years for systems utilizing solely ground water sources. The minimum number of samples required to be taken by the system shall be based on the number of treatment plants used by the system, except that multiple wells drawing raw water from a single aquifer may, with the State approval, be considered one treatment plant for determining the minimum number of samples. The supplier of water may be required by the State to collect and analyze water samples for sodium more frequently in locations where the sodium content is variable.

(b) The supplier of water shall report to EPA and/or the State the results of the analyses for sodium within the first 10 days of the month following the month in which the sample results were received or within the first 10 days following the end of the required monitoring period as stipulated by the State, whichever of these is first. If more than annual sampling is required the supplier shall report the average sodium concentration within 10 days of the month following the month in which the analytical results of the last sample used for the annual average was received. The supplier of water shall not be required to report the results to EPA where the State has adopted this regulation and results are reported to the State. The supplier shall report the results to EPA where the State has not adopted this regulation.

(c) The supplier of water shall notify appropriate local and State public health officials of the sodium levels by written notice by direct mail within three months. A copy of each notice required to be provided by this paragraph shall be sent to EPA and/or the State within 10 days of its issuance. The supplier of water is not required to notify appropriate local and State public health officials of the sodium levels

where the State provides such notices in lieu of the supplier.

(d) Analyses for sodium shall be conducted as directed in § 141.23(k)(1).

[45 FR 57345, Aug. 27, 1980, as amended at 59 FR 62470, Dec. 5, 1994]

§ 141.42 Special monitoring for corrosivity characteristics.

(a)–(c) [Reserved]

(d) Community water supply systems shall identify whether the following construction materials are present in their distribution system and report to the State:

Lead from piping, solder, caulking, interior lining of distribution mains, alloys and home plumbing.
Copper from piping and alloys, service lines, and home plumbing.
Galvanized piping, service lines, and home plumbing.
Ferrous piping materials such as cast iron and steel.
Asbestos cement pipe.

In addition, States may require identification and reporting of other materials of construction present in distribution systems that may contribute contaminants to the drinking water, such as:

Vinyl lined asbestos cement pipe.
Coal tar lined pipes and tanks.

[45 FR 57346, Aug. 27, 1980; 47 FR 10999, Mar. 12, 1982, as amended at 59 FR 62470, Dec. 5, 1994]

§ 141.43 Prohibition on use of lead pipes, solder, and flux.

(a) *In general*—(1) *Prohibition*. Any pipe, solder, or flux, which is used after June 19, 1986, in the installation or repair of—

(i) Any public water system, or

(ii) Any plumbing in a residential or nonresidential facility providing water for human consumption which is connected to a public water system shall be lead free as defined by paragraph (d) of this section. This paragraph (a)(1) shall not apply to leaded joints necessary for the repair of cast iron pipes.

(2) [Reserved]

(b) *State enforcement*—(1) *Enforcement of prohibition*. The requirements of paragraph (a)(1) of this section shall be enforced in all States effective June 19, 1988. States shall enforce such requirements through State or local plumbing codes, or such other means of enforcement as the State may determine to be appropriate.

(2) [Reserved]

(c) *Penalties*. If the Administrator determines that a State is not enforcing the requirements of paragraph (a) of this section, as required pursuant to paragraph (b) of this section, the Administrator may withhold up to 5 percent of Federal funds available to that State for State program grants under section 1443(a) of the Act.

(d) *Definition of lead free*. For purposes of this section, the term lead free:

(1) When used with respect to solders and flux refers to solders and flux containing not more than 0.2 percent lead;

(2) When used with respect to pipes and pipe fittings refers to pipes and pipe fittings containing not more than 8.0 percent lead; and

(3) When used with respect to plumbing fittings and fixtures intended by the manufacturer to dispense water for human ingestion refers to fittings and fixtures that are in compliance with standards established in accordance with 42 U.S.C. 300g–6(e).

[52 FR 20674, June 2, 1987, as amended at 65 FR 2003, Jan. 12, 2000]

Subpart F—Maximum Contaminant Level Goals and Maximum Residual Disinfectant Level Goals

§ 141.50 Maximum contaminant level goals for organic contaminants.

(a) MCLGs are zero for the following contaminants:

(1) Benzene
(2) Vinyl chloride
(3) Carbon tetrachloride
(4) 1,2-dichloroethane
(5) Trichloroethylene
(6) Acrylamide
(7) Alachlor
(8) Chlordane
(9) Dibromochloropropane
(10) 1,2-Dichloropropane
(11) Epichlorohydrin
(12) Ethylene dibromide
(13) Heptachlor
(14) Heptachlor epoxide
(15) Pentachlorophenol

(16) Polychlorinated biphenyls (PCBs)
(17) Tetrachloroethylene
(18) Toxaphene
(19) Benzo[a]pyrene
(20) Dichloromethane (methylene chloride)
(21) Di(2-ethylhexyl)phthalate
(22) Hexachlorobenzene
(23) 2,3,7,8-TCDD (Dioxin)

(b) MCLGs for the following contaminants are as indicated:

Contaminant	MCLG in mg/l
(1) 1,1-Dichloroethylene	0.007
(2) 1,1,1-Trichloroethane	0.20
(3) para-Dichlorobenzene	0.075
(4) Aldicarb	0.001
(5) Aldicarb sulfoxide	0.001
(6) Aldicarb sulfone	0.001
(7) Atrazine	0.003
(8) Carbofuran	0.04
(9) o-Dichlorobenzene	0.6
(10) cis-1,2-Dichloroethylene	0.07
(11) trans-1,2-Dichloroethylene	0.1
(12) 2,4-D	0.07
(13) Ethylbenzene	0.7
(14) Lindane	0.0002
(15) Methoxychlor	0.04
(16) Monochlorobenzene	0.1
(17) Styrene	0.1
(18) Toluene	1
(19) 2,4,5-TP	0.05
(20) Xylenes (total)	10
(21) Dalapon	0.2
(22) Di(2-ethylhexyl)adipate	.4
(23) Dinoseb	.007
(24) Diquat	.02
(25) Endothall	.1
(26) Endrin	.002
(27) Glyphosate	.7
(28) Hexachlorocyclopentadiene	.05
(29) Oxamyl (Vydate)	.2
(30) Picloram	.5
(31) Simazine	.004
(32) 1,2,4-Trichlorobenzene	.07
(33) 1,1,2-Trichloroethane	.003

[50 FR 46901, Nov. 13, 1985, as amended at 52 FR 20674, June 2, 1987; 52 FR 25716, July 8, 1987; 56 FR 3592, Jan. 30, 1991; 56 FR 30280, July 1, 1991; 57 FR 31846, July 17, 1992]

§ 141.51 Maximum contaminant level goals for inorganic contaminants.

(a) [Reserved]

(b) MCLGs for the following contaminants are as indicated:

Contaminant	MCLG (mg/l)
Antimony	0.006
Arsenic	zero [1]
Asbestos	7 Million fibers/liter (longer than 10 μm).
Barium	2
Beryllium	.004
Cadmium	0.005
Chromium	0.1
Copper	1.3
Cyanide (as free Cyanide)	.2
Fluoride	4.0
Lead	zero
Mercury	0.002
Nitrate	10 (as Nitrogen).
Nitrite	1 (as Nitrogen).
Total Nitrate + Nitrite	10 (as Nitrogen).
Selenium	0.05
Thallium	.0005

[1] This value for arsenic is effective January 23, 2006. Until then, there is no MCLG.

[50 FR 47155, Nov. 14, 1985, as amended at 52 FR 20674, June 2, 1987; 56 FR 3593, Jan. 30, 1991; 56 FR 26548, June 7, 1991; 56 FR 30280, July 1, 1991; 57 FR 31846, July 17, 1992; 60 FR 33932, June 29, 1995; 66 FR 7063, Jan. 22, 2001]

§ 141.52 Maximum contaminant level goals for microbiological contaminants.

(a) MCLGs for the following contaminants are as indicated:

Contaminant	MCLG
(1) *Giardia lamblia*	zero
(2) Viruses	zero
(3) *Legionella*	zero
(4) Total coliforms (including fecal) coliforms and *Escherichia coli.*	zero
(5) *Cryptosporidium*	zero
(6) *Escherichia coli (E. coli)*	zero

(b) The MCLG identified in paragraph (a)(4) of this section is applicable until March 31, 2016. The MCLG identified in paragraph (a)(6) of this section is applicable beginning April 1, 2016.

[78 FR 10347, Feb. 13, 2013]

§ 141.53 Maximum contaminant level goals for disinfection byproducts.

MCLGs for the following disinfection byproducts are as indicated:

Disinfection byproduct	MCLG (mg/L)
Bromodichloromethane	zero
Bromoform	zero
Bromate	zero
Chlorite	0.8
Chloroform	0.07
Dibromochloromethane	0.06
Dichloroacetic acid	zero
Monochloroacetic acid	0.07
Trichloroacetic acid	0.02

[63 FR 69465, Dec. 16, 1998, as amended at 65 FR 34405, May 30, 2000; 71 FR 478, Jan. 4, 2006]

§ 141.54 Maximum residual disinfectant level goals for disinfectants.

MRDLGs for disinfectants are as follows:

Disinfectant residual	MRDLG(mg/L)
Chlorine	4 (as Cl_2).
Chloramines	4 (as Cl_2).
Chlorine dioxide	0.8 (as ClO_2)

[63 FR 69465, Dec. 16, 1998]

§ 141.55 Maximum contaminant level goals for radionuclides.

MCLGs for radionuclides are as indicated in the following table:

Contaminant	MCLG
1. Combined radium-226 and radium-228	Zero.
2. Gross alpha particle activity (excluding radon and uranium).	Zero.
3. Beta particle and photon radioactivity	Zero.
4. Uranium	Zero.

[65 FR 76748, Dec. 7, 2000]

Subpart G—National Primary Drinking Water Regulations: Maximum Contaminant Levels and Maximum Residual Disinfectant Levels

§ 141.60 Effective dates.

(a) The effective dates for § 141.61 are as follows:

(1) The effective date for paragraphs (a)(1) through (a)(8) of § 141.61 is January 9, 1989.

(2) The effective date for paragraphs (a)(9) through (a)(18) and (c)(1) through (c)(18) of § 141.61 is July 30, 1992.

(3) The effective date for paragraphs (a)(19) through (a)(21), (c)(19) through (c)(25), and (c)(27) through (c)(33) of § 141.61 is January 17, 1994. The effective date of § 141.61(c)(26) is August 17, 1992.

(b) The effective dates for § 141.62 are as follows:

(1) The effective date of paragraph (b)(1) of § 141.62 is October 2, 1987.

(2) The effective date for paragraphs (b)(2) and (b)(4) through (b)(10) of § 141.62 is July 30, 1992.

(3) The effective date for paragraphs (b)(11) through (b)(15) of § 141.62 is January 17, 1994.

(4) The effective date for § 141.62(b)(16) is January 23, 2006.

[56 FR 3593, Jan. 30, 1991, as amended at 57 FR 31846, July 17, 1992; 59 FR 34324, July 1, 1994; 66 FR 7063, Jan. 22, 2001]

§ 141.61 Maximum contaminant levels for organic contaminants.

(a) The following maximum contaminant levels for organic contaminants apply to community and non-transient, non-community water systems.

CAS No.	Contaminant	MCL (mg/l)
(1) 75–01–4	Vinyl chloride	0.002
(2) 71–43–2	Benzene	0.005
(3) 56–23–5	Carbon tetrachloride	0.005
(4) 107–06–2	1,2-Dichloroethane	0.005
(5) 79–01–6	Trichloroethylene	0.005
(6) 106–46–7	para-Dichlorobenzene	0.075
(7) 75–35–4	1,1-Dichloroethylene	0.007
(8) 71–55–6	1,1,1-Trichloroethane	0.2
(9) 156–59–2	cis-1,2-Dichloroethylene	0.07
(10) 78–87–5	1,2-Dichloropropane	0.005
(11) 100–41–4	Ethylbenzene	0.7
(12) 108–90–7	Monochlorobenzene	0.1
(13) 95–50–1	o-Dichlorobenzene	0.6
(14) 100–42–5	Styrene	0.1
(15) 127–18–4	Tetrachloroethylene	0.005
(16) 108–88–3	Toluene	1
(17) 156–60–5	trans-1,2-Dichloroethylene	0.1
(18) 1330–20–7	Xylenes (total)	10
(19) 75–09–2	Dichloromethane	0.005
(20) 120–82–1	1,2,4-Trichloro- benzene	.07
(21) 79–00–5	1,1,2-Trichloro- ethane	.005

(b) The Administrator, pursuant to section 1412 of the Act, hereby identifies as indicated in the Table below granular activated carbon (GAC),

packed tower aeration (PTA), or oxidation (OX) as the best technology treatment technique, or other means available for achieving compliance with the maximum contaminant level for organic contaminants identified in paragraphs (a) and (c) of this section:

BAT FOR ORGANIC CONTAMINANTS LISTED IN § 141.61 (a) AND (c)

CAS No.	Contaminant	GAC	PTA	OX
15972–60–8	Alachlor	X		
116–06–3	Aldicarb	X		
1646–88–4	Aldicarb sulfone	X		
1646–87–3	Aldicarb sulfoxide	X		
1912–24–9	Atrazine	X		
71–43–2	Benzene	X	X	
50–32–8	Benzo[a]pyrene	X		
1563–66–2	Carbofuran	X		
56–23–5	Carbon tetrachloride	X	X	
57–74–9	Chlordane	X		
75–99–0	Dalapon	X		
94–75–7	2,4-D	X		
103–23–1	Di (2-ethylhexyl) adipate	X	X	
117–81–7	Di (2-ethylhexyl) phthalate	X		
96–12–8	Dibromochloropropane (DBCP)	X	X	
95–50–1	o-Dichlorobenzene	X	X	
106–46–7	para-Dichlorobenzene	X	X	
107–06–2	1,2-Dichloroethane	X	X	
75–35–4	1,1-Dichloroethylene	X	X	
156–59–2	cis-1,2-Dichloroethylene	X	X	
156–60–5	trans-1,2-Dichloroethylene	X	X	
75–09–2	Dichloromethane	.....	X	
78–87–5	1,2-Dichloropropane	X	X	
88–85–7	Dinoseb	X		
85–00–7	Diquat	X		
145–73–3	Endothall	X		
72–20–8	Endrin	X		
100–41–4	Ethylbenzene	X	X	
106–93–4	Ethylene Dibromide (EDB)	X	X	
1071–83–6	Gylphosate	.....	.....	X
76–44–8	Heptachlor	X		
1024–57–3	Heptachlor epoxide	X		
118–74–1	Hexachlorobenzene	X		
77–47–3	Hexachlorocyclopentadiene	X	X	
58–89–9	Lindane	X		
72–43–5	Methoxychlor	X		
108–90–7	Monochlorobenzene	X	X	
23135–22–0	Oxamyl (Vydate)	X		
87–86–5	Pentachlorophenol	X		
1918–02–1	Picloram	X		
1336–36–3	Polychlorinated biphenyls (PCB)	X		
122–34–9	Simazine	X		
100–42–5	Styrene	X	X	
1746–01–6	2,3,7,8-TCDD (Dioxin)	X		
127–18–4	Tetrachloroethylene	X	X	
108–88–3	Toluene	X	X	
8001–35–2	Toxaphene	X		
93–72–1	2,4,5-TP (Silvex)	X		
120–82–1	1,2,4-Trichlorobenzene	X	X	
71–55–6	1,1,1-Trichloroethane	X	X	
79–00–5	1,1,2-Trichloroethane	X	X	
79–01–6	Trichloroethylene	X	X	
75–01–4	Vinyl chloride	.....	X	
1330–20–7	Xylene	X	X	.....

(c) The following maximum contaminant levels for synthetic organic contaminants apply to community water systems and non-transient, non-community water systems:

CAS No.	Contaminant	MCL (mg/l)
(1) 15972–60–8	Alachlor	0.002

CAS No.	Contaminant	MCL (mg/l)
(2) 116–06–3	Aldicarb	0.003
(3) 1646–87–3	Aldicarb sulfoxide	0.004
(4) 1646–87–4	Aldicarb sulfone	0.002
(5) 1912–24–9	Atrazine	0.003
(6) 1563–66–2	Carbofuran	0.04
(7) 57–74–9	Chlordane	0.002
(8) 96–12–8	Dibromochloropropane	0.0002
(9) 94–75–7	2,4-D	0.07
(10) 106–93–4	Ethylene dibromide	0.00005
(11) 76–44–8	Heptachlor	0.0004
(12) 1024–57–3	Heptachlor epoxide	0.0002
(13) 58–89–9	Lindane	0.0002
(14) 72–43–5	Methoxychlor	0.04
(15) 1336–36–3	Polychlorinated biphenyls	0.0005
(16) 87–86–5	Pentachlorophenol	0.001
(17) 8001–35–2	Toxaphene	0.003
(18) 93–72–1	2,4,5-TP	0.05
(19) 50–32–8	Benzo[a]pyrene	0.0002
(20) 75–99–0	Dalapon	0.2
(21) 103–23–1	Di(2-ethylhexyl) adipate	0.4
(22) 117–81–7	Di(2-ethylhexyl) phthalate	0.006
(23) 88–85–7	Dinoseb	0.007
(24) 85–00–7	Diquat	0.02
(25) 145–73–3	Endothall	0.1
(26) 72–20–8	Endrin	0.002
(27) 1071–53–6	Glyphosate	0.7
(28) 118–74–1	Hexacholorbenzene	0.001
(29) 77–47–4	Hexachlorocyclopentadiene	0.05
(30) 23135–22–0	Oxamyl (Vydate)	0.2
(31) 1918–02–1	Picloram	0.5
(32) 122–34–9	Simazine	0.004
(33) 1746–01–6	2,3,7,8-TCDD (Dioxin)	3×10^{-8}

[56 FR 3593, Jan. 30, 1991, as amended at 56 FR 30280, July 1, 1991; 57 FR 31846, July 17, 1992; 59 FR 34324, July 1, 1994]

§ 141.62 Maximum contaminant levels for inorganic contaminants.

(a) [Reserved]

(b) The maximum contaminant levels for inorganic contaminants specified in paragraphs (b) (2)–(6), (b)(10), and (b)(11)–(16) of this section apply to community water systems and non-transient, non-community water systems. The maximum contaminant level specified in paragraph (b)(1) of this section only applies to community water systems. The maximum contaminant levels specified in (b)(7), (b)(8), and (b)(9) of this section apply to community water systems; non-transient, non-community water systems; and transient non-community water systems.

Contaminant	MCL (mg/l)
(1) Fluoride	4.0
(2) Asbestos	7 Million Fibers/liter (longer than 10 μm).
(3) Barium	2
(4) Cadmium	0.005
(5) Chromium	0.1
(6) Mercury	0.002
(7) Nitrate	10 (as Nitrogen)
(8) Nitrite	1 (as Nitrogen)
(9) Total Nitrate and Nitrite	10 (as Nitrogen)
(10) Selenium	0.05
(11) Antimony	0.006
(12) Beryllium	0.004
(13) Cyanide (as free Cyanide).	0.2
(14) [Reserved].	
(15) Thallium	0.002
(16) Arsenic	0.010

(c) The Administrator, pursuant to section 1412 of the Act, hereby identifies the following as the best technology, treatment technique, or other means available for achieving compliance with the maximum contaminant levels for inorganic contaminants identified in paragraph (b) of this section, except fluoride:

BAT FOR INORGANIC COMPOUNDS LISTED IN SECTION 141.62(b)

Chemical Name	BAT(s)
Antimony	2,7
Arsenic[4]	1, 2, 5, 6, 7, 9, 12[5]
Asbestos	2,3,8
Barium	5,6,7,9

BAT FOR INORGANIC COMPOUNDS LISTED IN SECTION 141.62(b)—Continued

Chemical Name	BAT(s)
Beryllium	1,2,5,6,7
Cadmium	2,5,6,7
Chromium	2,5,6[2],7
Cyanide	5,7,13
Mercury	2[1],4,6[1],7[1]
Nickel	5,6,7
Nitrate	5,7,9
Nitrite	5,7
Selenium	1,2[3],6,7,9
Thallium	1,5

[1] BAT only if influent Hg concentrations ≤10μg/1.
[2] BAT for Chromium III only.
[3] BAT for Selenium IV only.
[4] BATs for Arsenic V. Pre-oxidation may be required to convert Arsenic III to Arsenic V.
[5] To obtain high removals, iron to arsenic ratio must be at least 20:1.

Key to BATS in Table

1 = Activated Alumina
2 = Coagulation/Filtration (not BAT for systems <500 service connections)
3 = Direct and Diatomite Filtration
4 = Granular Activated Carbon
5 = Ion Exchange
6 = Lime Softening (not BAT for systems <500 service connections)
7 = Reverse Osmosis
8 = Corrosion Control
9 = Electrodialysis
10 = Chlorine
11 = Ultraviolet
12 = Oxidation/Filtration
13 = Alkaline Chlorination (pH ≥8.5)

(d) The Administrator, pursuant to section 1412 of the Act, hereby identifies in the following table the affordable technology, treatment technique, or other means available to systems serving 10,000 persons or fewer for achieving compliance with the maximum contaminant level for arsenic:

SMALL SYSTEM COMPLIANCE TECHNOLOGIES (SSCTs)[1] FOR ARSENIC[2]

Small system compliance technology	Affordable for listed small system categories[3]
Activated Alumina (centralized).	All size categories.
Activated Alumina (Point-of-Use)[4].	All size categories.
Coagulation/Filtration[5]	501–3,300, 3,301–10,000.
Coagulation-assisted Microfiltration.	501–3,300, 3,301–10,000.
Electrodialysis reversal[6]	501–3,300, 3,301–10,000.
Enhanced coagulation/filtration.	All size categories
Enhanced lime softening (pH>10.5).	All size categories.
Ion Exchange	All size categories.
Lime Softening[5]	501–3,300, 3,301–10,000.
Oxidation/Filtration[7]	All size categories.
Reverse Osmosis (centralized)[6].	501–3,300, 3,301–10,000.
Reverse Osmosis (Point-of-Use)[4].	All size categories.

[1] Section 1412(b)(4)(E)(ii) of SDWA specifies that SSCTs must be affordable and technically feasible for small systems.
[2] SSCTs for Arsenic V. Pre-oxidation may be required to convert Arsenic III to Arsenic V.
[3] The Act (ibid.) specifies three categories of small systems: (i) those serving 25 or more, but fewer than 501, (ii) those serving more than 500, but fewer than 3,301, and (iii) those serving more than 3,300, but fewer than 10,001.
[4] When POU or POE devices are used for compliance, programs to ensure proper long-term operation, maintenance, and monitoring must be provided by the water system to ensure adequate performance.
[5] Unlikely to be installed solely for arsenic removal. May require pH adjustment to optimal range if high removals are needed.
[6] Technologies reject a large volume of water—may not be appropriate for areas where water quantity may be an issue.
[7] To obtain high removals, iron to arsenic ratio must be at least 20:1.

[56 FR 3594, Jan. 30, 1991, as amended at 56 FR 30280, July 1, 1991; 57 FR 31847, July 17, 1992; 59 FR 34325, July 1, 1994; 60 FR 33932, June 29, 1995; 66 FR 7063, Jan. 22, 2001; 68 FR 14506, Mar. 25, 2003; 69 FR 38855, June 29, 2004]

§ 141.63 Maximum contaminant levels (MCLs) for microbiological contaminants.

(a) Until March 31, 2016, the total coliform MCL is based on the presence or absence of total coliforms in a sample, rather than coliform density.

(1) For a system that collects at least 40 samples per month, if no more than 5.0 percent of the samples collected during a month are total coliform-positive, the system is in compliance with the MCL for total coliforms.

(2) For a system that collects fewer than 40 samples per month, if no more than one sample collected during a month is total coliform-positive, the system is in compliance with the MCL for total coliforms.

(b) Until March 31, 2016, any fecal coliform-positive repeat sample or *E. coli*-positive repeat sample, or any total coliform-positive repeat sample following a fecal coliform-positive or *E. coli*-positive routine sample, constitutes a violation of the MCL for total coliforms. For purposes of the public notification requirements in subpart Q of this part, this is a violation that may pose an acute risk to health.

(c) Beginning April 1, 2016, a system is in compliance with the MCL for *E.*

coli for samples taken under the provisions of subpart Y of this part unless any of the conditions identified in paragraphs (c)(1) through (c)(4) of this section occur. For purposes of the public notification requirements in subpart Q of this part, violation of the MCL may pose an acute risk to health.

(1) The system has an *E. coli*-positive repeat sample following a total coliform-positive routine sample.

(2) The system has a total coliform-positive repeat sample following an *E. coli*-positive routine sample.

(3) The system fails to take all required repeat samples following an *E. coli*-positive routine sample.

(4) The system fails to test for *E. coli* when any repeat sample tests positive for total coliform.

(d) Until March 31, 2016, a public water system must determine compliance with the MCL for total coliforms in paragraphs (a) and (b) of this section for each month in which it is required to monitor for total coliforms. Beginning April 1, 2016, a public water system must determine compliance with the MCL for *E. coli* in paragraph (c) of this section for each month in which it is required to monitor for total coliforms.

(e) The Administrator, pursuant to section 1412 of the Act, hereby identifies the following as the best technology, treatment techniques, or other means available for achieving compliance with the maximum contaminant level for total coliforms in paragraphs (a) and (b) of this section and for achieving compliance with the maximum contaminant level for *E. coli* in paragraph (c) of this section:

(1) Protection of wells from fecal contamination by appropriate placement and construction;

(2) Maintenance of a disinfectant residual throughout the distribution system;

(3) Proper maintenance of the distribution system including appropriate pipe replacement and repair procedures, main flushing programs, proper operation and maintenance of storage tanks and reservoirs, cross connection control, and continual maintenance of positive water pressure in all parts of the distribution system;

(4) Filtration and/or disinfection of surface water, as described in subparts H, P, T, and W of this part, or disinfection of ground water, as described in subpart S of this part, using strong oxidants such as chlorine, chlorine dioxide, or ozone; and

(5) For systems using ground water, compliance with the requirements of an EPA-approved State Wellhead Protection Program developed and implemented under section 1428 of the SDWA.

(f) The Administrator, pursuant to section 1412 of the Act, hereby identifies the technology, treatment techniques, or other means available identified in paragraph (e) of this section as affordable technology, treatment techniques, or other means available to systems serving 10,000 or fewer people for achieving compliance with the maximum contaminant level for total coliforms in paragraphs (a) and (b) of this section and for achieving compliance with the maximum contaminant level for *E. coli* in paragraph (c) of this section.

[78 FR 10347, Feb. 13, 2013]

§ 141.64 Maximum contaminant levels for disinfection byproducts.

(a) *Bromate and chlorite.* The maximum contaminant levels (MCLs) for bromate and chlorite are as follows:

Disinfection byproduct	MCL (mg/L)
Bromate	0.010
Chlorite	1.0

(1) *Compliance dates for CWSs and NTNCWSs.* Subpart H systems serving 10,000 or more persons must comply with this paragraph (a) beginning January 1, 2002. Subpart H systems serving fewer than 10,000 persons and systems using only ground water not under the direct influence of surface water must comply with this paragraph (a) beginning January 1, 2004.

(2) The Administrator, pursuant to section 1412 of the Act, hereby identifies the following as the best technology, treatment techniques, or other means available for achieving compliance with the maximum contaminant levels for bromate and chlorite identified in this paragraph (a):

Disinfection byproduct	Best available technology
Bromate	Control of ozone treatment process to reduce production of bromate
Chlorite	Control of treatment processes to reduce disinfectant demand and control of disinfection treatment processes to reduce disinfectant levels

(b) TTHM and HAA5. (1) Subpart L—RAA compliance. (i) Compliance dates. Subpart H systems serving 10,000 or more persons must comply with this paragraph (b)(1) beginning January 1, 2002. Subpart H systems serving fewer than 10,000 persons and systems using only ground water not under the direct influence of surface water must comply with this paragraph (b)(1) beginning January 1, 2004. All systems must comply with these MCLs until the date specified for subpart V compliance in § 141.620(c).

Disinfection byproduct	MCL (mg/L)
Total trihalomethanes (TTHM)	0.080
Haloacetic acids (five) (HAA5)	0.060

(ii) The Administrator, pursuant to section 1412 of the Act, hereby identifies the following as the best technology, treatment techniques, or other means available for achieving compliance with the maximum contaminant levels for TTHM and HAA5 identified in this paragraph (b)(1):

Disinfection byproduct	Best available technology
Total trihalomethanes (TTHM) and Haloacetic acids (five) (HAA5).	Enhanced coagulation or enhanced softening or GAC10, with chlorine as the primary and residual disinfectant

(2) Subpart V—LRAA compliance. (i) Compliance dates. The subpart V MCLs for TTHM and HAA5 must be complied with as a locational running annual average at each monitoring location beginning the date specified for subpart V compliance in § 141.620(c).

Disinfection byproduct	MCL (mg/L)
Total trihalomethanes (TTHM)	0.080
Haloacetic acids (five) (HAA5)	0.060

(ii) The Administrator, pursuant to section 1412 of the Act, hereby identifies the following as the best technology, treatment techniques, or other means available for achieving compliance with the maximum contaminant levels for TTHM and HAA5 identified in this paragraph (b)(2) for all systems that disinfect their source water:

Disinfection byproduct	Best available technology
Total trihalomethanes (TTHM) and Haloacetic acids (five) (HAA5).	Enhanced coagulation or enhanced softening, plus GAC10; or nanofiltration with a molecular weight cutoff ≤1000 Daltons; or GAC20

(iii) The Administrator, pursuant to section 1412 of the Act, hereby identifies the following as the best technology, treatment techniques, or other means available for achieving compliance with the maximum contaminant levels for TTHM and HAA5 identified in this paragraph (b)(2) for consecutive systems and applies only to the disinfected water that consecutive systems buy or otherwise receive:

Disinfection byproduct	Best available technology
Total trihalomethanes (TTHM) and Haloacetic acids (five) (HAA5).	Systems serving ≥10,000: Improved distribution system and storage tank management to reduce residence time, plus the use of chloramines for disinfectant residual maintenance Systems serving <10,000: Improved distribution system and storage tank management to reduce residence time

[71 FR 478, Jan. 4, 2006]

§ 141.65 Maximum residual disinfectant levels.

(a) Maximum residual disinfectant levels (MRDLs) are as follows:

Disinfectant residual	MRDL (mg/L)
Chlorine	4.0 (as Cl_2).
Chloramines	4.0 (as Cl_2).
Chlorine dioxide	0.8 (as ClO_2).

(b) *Compliance dates*—(1) *CWSs and NTNCWSs.* Subpart H systems serving 10,000 or more persons must comply with this section beginning January 1, 2002. Subpart H systems serving fewer than 10,000 persons and systems using only ground water not under the direct influence of surface water must comply with this subpart beginning January 1, 2004.

(2) Transient NCWSs. Subpart H systems serving 10,000 or more persons and using chlorine dioxide as a disinfectant

or oxidant must comply with the chlorine dioxide MRDL beginning January 1, 2002. Subpart H systems serving fewer than 10,000 persons and using chlorine dioxide as a disinfectant or oxidant and systems using only ground water not under the direct influence of surface water and using chlorine dioxide as a disinfectant or oxidant must comply with the chlorine dioxide MRDL beginning January 1, 2004.

(c) The Administrator, pursuant to Section 1412 of the Act, hereby identifies the following as the best technology, treatment techniques, or other means available for achieving compliance with the maximum residual disinfectant levels identified in paragraph (a) of this section: control of treatment processes to reduce disinfectant demand and control of disinfection treatment processes to reduce disinfectant levels.

[63 FR 69465, Dec. 16, 1998, as amended at 66 FR 3776, Jan. 16, 2001]

§ 141.66 Maximum contaminant levels for radionuclides.

(a) [Reserved]

(b) *MCL for combined radium-226 and -228*. The maximum contaminant level for combined radium-226 and radium-228 is 5 pCi/L. The combined radium-226 and radium-228 value is determined by the addition of the results of the analysis for radium-226 and the analysis for radium-228.

(c) *MCL for gross alpha particle activity (excluding radon and uranium)*. The maximum contaminant level for gross alpha particle activity (including radium-226 but excluding radon and uranium) is 15 pCi/L.

(d) *MCL for beta particle and photon radioactivity*. (1) The average annual concentration of beta particle and photon radioactivity from man-made radionuclides in drinking water must not produce an annual dose equivalent to the total body or any internal organ greater than 4 millirem/year (mrem/year).

(2) Except for the radionuclides listed in table A, the concentration of man-made radionuclides causing 4 mrem total body or organ dose equivalents must be calculated on the basis of 2 liter per day drinking water intake using the 168 hour data list in ''Maximum Permissible Body Burdens and Maximum Permissible Concentrations of Radionuclides in Air and in Water for Occupational Exposure,'' NBS (National Bureau of Standards) Handbook 69 as amended August 1963, U.S. Department of Commerce. This incorporation by reference was approved by the Director of the Federal Register in accordance with 5 U.S.C. 552(a) and 1 CFR part 51. Copies of this document are available from the National Technical Information Service, NTIS ADA 280 282, U.S. Department of Commerce, 5285 Port Royal Road, Springfield, Virginia 22161. The toll-free number is 800–553–6847. Copies may be inspected at EPA's Drinking Water Docket, 401 M Street, SW., Washington, DC 20460; or at the National Archives and Records Administration (NARA). For information on the availability of this material at NARA, call 202–741–6030, or go to: *http://www.archives.gov/federal_register/code_of_federal_regulations/ibr_locations.html*. If two or more radionuclides are present, the sum of their annual dose equivalent to the total body or to any organ shall not exceed 4 mrem/year.

TABLE A—AVERAGE ANNUAL CONCENTRATIONS ASSUMED TO PRODUCE: A TOTAL BODY OR ORGAN DOSE OF 4 MREM/YR

1. Radionuclide	Critical organ	pCi per liter
2. Tritium	Total body	20,000
3. Strontium-90	Bone Marrow	8

(e) *MCL for uranium*. The maximum contaminant level for uranium is 30 μg/L.

(f) *Compliance dates*. (1) Compliance dates for combined radium-226 and -228, gross alpha particle activity, gross beta particle and photon radioactivity, and uranium: Community water systems must comply with the MCLs listed in paragraphs (b), (c), (d), and (e) of this section beginning December 8, 2003 and compliance shall be determined in accordance with the requirements of §§ 141.25 and 141.26. Compliance with reporting requirements for the radionuclides under appendix A to subpart O and appendices A and B to subpart Q is required on December 8, 2003.

(2) [Reserved]

(g) *Best available technologies (BATs) for radionuclides*. The Administrator,

pursuant to section 1412 of the Act, hereby identifies as indicated in the following table the best technology available for achieving compliance with the maximum contaminant levels for combined radium-226 and -228, uranium, gross alpha particle activity, and beta particle and photon radioactivity.

TABLE B—BAT FOR COMBINED RADIUM-226 AND RADIUM-228, URANIUM, GROSS ALPHA PARTICLE ACTIVITY, AND BETA PARTICLE AND PHOTON RADIOACTIVITY

Contaminant	BAT
1. Combined radium-226 and radium-228	Ion exchange, reverse osmosis, lime softening.
2. Uranium	Ion exchange, reverse osmosis, lime softening, coagulation/filtration.
3. Gross alpha particle activity (excluding Radon and Uranium)	Reverse osmosis.
4. Beta particle and photon radioactivity	Ion exchange, reverse osmosis.

(h) *Small systems compliance technologies list for radionuclides.*

TABLE C—LIST OF SMALL SYSTEMS COMPLIANCE TECHNOLOGIES FOR RADIONUCLIDES AND LIMITATIONS TO USE

Unit technologies	Limitations (see footnotes)	Operator skill level required [1]	Raw water quality range and considerations. [1]
1. Ion exchange (IE)	([a])	Intermediate	All ground waters.
2. Point of use (POU [2]) IE	([b])	Basic	All ground waters.
3. Reverse osmosis (RO)	([c])	Advanced	Surface waters usually require pre-filtration.
4. POU [2] RO	([b])	Basic	Surface waters usually require pre-filtration.
5. Lime softening	([d])	Advanced	All waters.
6. Green sand filtration	([e])	Basic.	
7. Co-precipitation with Barium sulfate	([f])	Intermediate to Advanced	Ground waters with suitable water quality.
8. Electrodialysis/electrodialysis reversal.		Basic to Intermediate	All ground waters.
9. Pre-formed hydrous Manganese oxide filtration.	([g])	Intermediate	All ground waters.
10. Activated alumina	([a]), ([h])	Advanced	All ground waters; competing anion concentrations may affect regeneration frequency.
11. Enhanced coagulation/filtration	([i])	Advanced	Can treat a wide range of water qualities.

[1] National Research Council (NRC). Safe Water from Every Tap: Improving Water Service to Small Communities. National Academy Press. Washington, D.C. 1997.

[2] A POU, or ''point-of-use'' technology is a treatment device installed at a single tap used for the purpose of reducing contaminants in drinking water at that one tap. POU devices are typically installed at the kitchen tap. See the April 21, 2000 NODA for more details.

Limitations Footnotes: Technologies for Radionuclides:

[a] The regeneration solution contains high concentrations of the contaminant ions. Disposal options should be carefully considered before choosing this technology.

[b] When POU devices are used for compliance, programs for long-term operation, maintenance, and monitoring must be provided by water utility to ensure proper performance.

[c] Reject water disposal options should be carefully considered before choosing this technology. See other RO limitations described in the SWTR Compliance Technologies Table.

[d] The combination of variable source water quality and the complexity of the water chemistry involved may make this technology too complex for small surface water systems.

[e] Removal efficiencies can vary depending on water quality.

[f] This technology may be very limited in application to small systems. Since the process requires static mixing, detention basins, and filtration, it is most applicable to systems with sufficiently high sulfate levels that already have a suitable filtration treatment train in place.

[g] This technology is most applicable to small systems that already have filtration in place.

[h] Handling of chemicals required during regeneration and pH adjustment may be too difficult for small systems without an adequately trained operator.

[i] Assumes modification to a coagulation/filtration process already in place.

TABLE D—COMPLIANCE TECHNOLOGIES BY SYSTEM SIZE CATEGORY FOR RADIONUCLIDE NPDWR'S

Contaminant	Compliance technologies [1] for system size categories (population served)		3,300–10,000
	25–500	501–3,300	
1. Combined radium-226 and radium-228	1, 2, 3, 4, 5, 6, 7, 8, 9	1, 2, 3, 4, 5, 6, 7, 8, 9	1, 2, 3, 4, 5, 6, 7. 8, 9.
2. Gross alpha particle activity	3, 4	3, 4	3, 4.
3. Beta particle activity and photon activity	1, 2, 3, 4	1, 2, 3, 4	1, 2, 3, 4.

TABLE D—COMPLIANCE TECHNOLOGIES BY SYSTEM SIZE CATEGORY FOR RADIONUCLIDE NPDWR's—Continued

Contaminant	Compliance technologies [1] for system size categories (population served)		3,300–10,000
	25–500	501–3,300	
4. Uranium	1, 2, 4, 10, 11	1, 2, 3, 4, 5, 10, 11	1, 2, 3, 4, 5, 10, 11.

NOTE: [1] Numbers correspond to those technologies found listed in the table C of 141.66(h).

[65 FR 76748, Dec. 7, 2000]

Subpart H—Filtration and Disinfection

SOURCE: 54 FR 27527, June 29, 1989, unless otherwise noted.

§ 141.70 General requirements.

(a) The requirements of this subpart H constitute national primary drinking water regulations. These regulations establish criteria under which filtration is required as a treatment technique for public water systems supplied by a surface water source and public water systems supplied by a ground water source under the direct influence of surface water. In addition, these regulations establish treatment technique requirements in lieu of maximum contaminant levels for the following contaminants: *Giardia lamblia*, viruses, heterotrophic plate count bacteria, *Legionella*, and turbidity. Each public water system with a surface water source or a ground water source under the direct influence of surface water must provide treatment of that source water that complies with these treatment technique requirements. The treatment technique requirements consist of installing and properly operating water treatment processes which reliably achieve:

(1) At least 99.9 percent (3-log) removal and/or inactivation of *Giardia lamblia* cysts between a point where the raw water is not subject to recontamination by surface water runoff and a point downstream before or at the first customer; and

(2) At least 99.99 percent (4-log) removal and/or inactivation of viruses between a point where the raw water is not subject to recontamination by surface water runoff and a point downstream before or at the first customer.

(b) A public water system using a surface water source or a ground water source under the direct influence of surface water is considered to be in compliance with the requirements of paragraph (a) of this section if:

(1) It meets the requirements for avoiding filtration in § 141.71 and the disinfection requirements in § 141.72(a); or

(2) It meets the filtration requirements in § 141.73 and the disinfection requirements in § 141.72(b).

(c) Each public water system using a surface water source or a ground water source under the direct influence of surface water must be operated by qualified personnel who meet the requirements specified by the State.

(d) *Additional requirements for systems serving at least 10,000 people.* In addition to complying with requirements in this subpart, systems serving at least 10,000 people must also comply with the requirements in subpart P of this part.

(e) *Additional requirements for systems serving fewer than 10,000 people.* In addition to complying with requirements in this subpart, systems serving fewer than 10,000 people must also comply with the requirements in subpart T of this part.

[54 FR 27527, June 29, 1989, as amended at 63 FR 69516, Dec. 16, 1998; 67 FR 1836, Jan. 14, 2002]

§ 141.71 Criteria for avoiding filtration.

A public water system that uses a surface water source must meet all of the conditions of paragraphs (a) and (b) of this section, and is subject to paragraph (c) of this section, beginning December 30, 1991, unless the State has determined, in writing pursuant to § 1412(b)(7)(C)(iii), that filtration is required. A public water system that

uses a ground water source under the direct influence of surface water must meet all of the conditions of paragraphs (a) and (b) of this section and is subject to paragraph (c) of this section, beginning 18 months after the State determines that it is under the direct influence of surface water, or December 30, 1991, whichever is later, unless the State has determined, in writing pursuant to §1412(b)(7)(C)(iii), that filtration is required. If the State determines in writing pursuant to §1412(b)(7)(C)(iii) before December 30, 1991, that filtration is required, the system must have installed filtration and meet the criteria for filtered systems specified in §§141.72(b) and 141.73 by June 29, 1993. Within 18 months of the failure of a system using surface water or a ground water source under the direct influence of surface water to meet any one of the requirements of paragraphs (a) and (b) of this section or after June 29, 1993, whichever is later, the system must have installed filtration and meet the criteria for filtered systems specified in §§141.72(b) and 141.73.

(a) *Source water quality conditions.* (1) The fecal coliform concentration must be equal to or less than 20/100 ml, or the total coliform concentration must be equal to or less than 100/100 ml (measured as specified in §141.74 (a) (1) and (2) and (b)(1)), in representative samples of the source water immediately prior to the first or only point of disinfectant application in at least 90 percent of the measurements made for the 6 previous months that the system served water to the public on an ongoing basis. If a system measures both fecal and total coliforms, the fecal coliform criterion, but not the total coliform criterion, in this paragraph must be met.

(2) The turbidity level cannot exceed 5 NTU (measured as specified in §141.74 (a)(1) and (b)(2)) in representative samples of the source water immediately prior to the first or only point of disinfectant application unless: (i) the State determines that any such event was caused by circumstances that were unusual and unpredictable; and (ii) as a result of any such event, there have not been more than two events in the past 12 months the system served water to the public, or more than five events in the past 120 months the system served water to the public, in which the turbidity level exceeded 5 NTU. An ''event'' is a series of consecutive days during which at least one turbidity measurement each day exceeds 5 NTU.

(b) *Site-specific conditions.* (1)(i) The public water system must meet the requirements of §141.72(a)(1) at least 11 of the 12 previous months that the system served water to the public, on an ongoing basis, unless the system fails to meet the requirements during 2 of the 12 previous months that the system served water to the public, and the State determines that at least one of these failures was caused by circumstances that were unusual and unpredictable.

(ii) The public water system must meet the requirements of §141.72(a)(2) at all times the system serves water to the public.

(iii) The public water system must meet the requirements of §141.72(a)(3) at all times the system serves water to the public unless the State determines that any such failure was caused by circumstances that were unusual and unpredictable.

(iv) The public water system must meet the requirements of §141.72(a)(4) on an ongoing basis unless the State determines that failure to meet these requirements was not caused by a deficiency in treatment of the source water.

(2) The public water system must maintain a watershed control program which minimizes the potential for contamination by *Giardia lamblia* cysts and viruses in the source water. The State must determine whether the watershed control program is adequate to meet this goal. The adequacy of a program to limit potential contamination by *Giardia lamblia* cysts and viruses must be based on: the comprehensiveness of the watershed review; the effectiveness of the system's program to monitor and control detrimental activities occurring in the watershed; and the extent to which the water system has maximized land ownership and/or controlled land use within the watershed. At a minimum, the watershed control program must:

(i) Characterize the watershed hydrology and land ownership;

(ii) Identify watershed characteristics and activities which may have an adverse effect on source water quality; and

(iii) Monitor the occurrence of activities which may have an adverse effect on source water quality.

The public water system must demonstrate through ownership and/or written agreements with landowners within the watershed that it can control all human activities which may have an adverse impact on the microbiological quality of the source water. The public water system must submit an annual report to the State that identifies any special concerns about the watershed and how they are being handled; describes activities in the watershed that affect water quality; and projects what adverse activities are expected to occur in the future and describes how the public water system expects to address them. For systems using a ground water source under the direct influence of surface water, an approved wellhead protection program developed under section 1428 of the Safe Drinking Water Act may be used, if the State deems it appropriate, to meet these requirements.

(3) The public water system must be subject to an annual on-site inspection to assess the watershed control program and disinfection treatment process. Either the State or a party approved by the State must conduct the on-site inspection. The inspection must be conducted by competent individuals such as sanitary and civil engineers, sanitarians, or technicians who have experience and knowledge about the operation and maintenance of a public water system, and who have a sound understanding of public health principles and waterborne diseases. A report of the on-site inspection summarizing all findings must be prepared every year. The on-site inspection must indicate to the State's satisfaction that the watershed control program and disinfection treatment process are adequately designed and maintained. The on-site inspection must include:

(i) A review of the effectiveness of the watershed control program;

(ii) A review of the physical condition of the source intake and how well it is protected;

(iii) A review of the system's equipment maintenance program to ensure there is low probability for failure of the disinfection process;

(iv) An inspection of the disinfection equipment for physical deterioration;

(v) A review of operating procedures;

(vi) A review of data records to ensure that all required tests are being conducted and recorded and disinfection is effectively practiced; and

(vii) Identification of any improvements which are needed in the equipment, system maintenance and operation, or data collection.

(4) The public water system must not have been identified as a source of a waterborne disease outbreak, or if it has been so identified, the system must have been modified sufficiently to prevent another such occurrence, as determined by the State.

(5) The public water system must comply with the maximum contaminant level (MCL) for total coliforms in §141.63(a) and (b) and the MCL for *E. coli* in §141.63(c) at least 11 months of the 12 previous months that the system served water to the public, on an ongoing basis, unless the State determines that failure to meet this requirement was not caused by a deficiency in treatment of the source water.

(6) The public water system must comply with the requirements for trihalomethanes in §§141.12 and 141.30 until December 31, 2001. After December 31, 2001, the system must comply with the requirements for total trihalomethanes, haloacetic acids (five), bromate, chlorite, chlorine, chloramines, and chlorine dioxide in subpart L of this part.

(c) *Treatment technique violations.* (1) A system that (i) fails to meet any one of the criteria in paragraphs (a) and (b) of this section and/or which the State has determined that filtration is required, in writing pursuant to §1412(b)(7)(C)(iii), and (ii) fails to install filtration by the date specified in the introductory paragraph of this section is in violation of a treatment technique requirement.

(2) A system that has not installed filtration is in violation of a treatment technique requirement if:

(i) The turbidity level (measured as specified in § 141.74(a)(1) and (b)(2)) in a representative sample of the source water immediately prior to the first or only point of disinfection application exceeds 5 NTU; or

(ii) The system is identified as a source of a waterborne disease outbreak.

[54 FR 27527, June 29, 1989, as amended at 63 FR 69516, Dec. 16, 1998; 66 FR 3776, Jan. 16, 2001; 69 FR 38855, June 29, 2004; 78 FR 10347, Feb. 13, 2013]

§ 141.72 Disinfection.

A public water system that uses a surface water source and does not provide filtration treatment must provide the disinfection treatment specified in paragraph (a) of this section beginning December 30, 1991, unless the State determines that filtration is required in writing pursuant to § 1412 (b)(7)(C)(iii). A public water system that uses a ground water source under the direct influence of surface water and does not provide filtration treatment must provide disinfection treatment specified in paragraph (a) of this section beginning December 30, 1991, or 18 months after the State determines that the ground water source is under the influence of surface water, whichever is later, unless the State has determined that filtration is required in writing pursuant to § 1412(b)(7)(C)(iii). If the State has determined that filtration is required, the system must comply with any interim disinfection requirements the State deems necessary before filtration is installed. A system that uses a surface water source that provides filtration treatment must provide the disinfection treatment specified in paragraph (b) of this section beginning June 29, 1993, or beginning when filtration is installed, whichever is later. A system that uses a ground water source under the direct influence of surface water and provides filtration treatment must provide disinfection treatment as specified in paragraph (b) of this section by June 29, 1993, or beginning when filtration is installed, whichever is later. Failure to meet any requirement of this section after the applicable date specified in this introductory paragraph is a treatment technique violation.

(a) *Disinfection requirements for public water systems that do not provide filtration.* Each public water system that does not provide filtration treatment must provide disinfection treatment as follows:

(1) The disinfection treatment must be sufficient to ensure at least 99.9 percent (3-log) inactivation of *Giardia lamblia* cysts and 99.99 percent (4-log) inactivation of viruses, every day the system serves water to the public, except any one day each month. Each day a system serves water to the public, the public water system must calculate the CT value(s) from the system's treatment parameters, using the procedure specified in § 141.74(b)(3), and determine whether this value(s) is sufficient to achieve the specified inactivation rates for *Giardia lamblia* cysts and viruses. If a system uses a disinfectant other than chlorine, the system may demonstrate to the State, through the use of a State-approved protocol for on-site disinfection challenge studies or other information satisfactory to the State, that $CT_{99.9}$ values other than those specified in tables 2.1 and 3.1 in § 141.74(b)(3) or other operational parameters are adequate to demonstrate that the system is achieving minimum inactivation rates required by paragraph (a)(1) of this section.

(2) The disinfection system must have either (i) redundant components, including an auxiliary power supply with automatic start-up and alarm to ensure that disinfectant application is maintained continuously while water is being delivered to the distribution system, or (ii) automatic shut-off of delivery of water to the distribution system whenever there is less than 0.2 mg/l of residual disinfectant concentration in the water. If the State determines that automatic shut-off would cause unreasonable risk to health or interfere with fire protection, the system must comply with paragraph (a)(2)(i) of this section.

(3) The residual disinfectant concentration in the water entering the distribution system, measured as specified in § 141.74 (a)(2) and (b)(5), cannot

be less than 0.2 mg/l for more than 4 hours.

(4)(i) The residual disinfectant concentration in the distribution system, measured as total chlorine, combined chlorine, or chlorine dioxide, as specified in §141.74 (a)(2) and (b)(6), cannot be undetectable in more than 5 percent of the samples each month, for any two consecutive months that the system serves water to the public. Water in the distribution system with a heterotrophic bacteria concentration less than or equal to 500/ml, measured as heterotrophic plate count (HPC) as specified in §141.74(a)(1), is deemed to have a detectable disinfectant residual for purposes of determining compliance with this requirement. Thus, the value ''V'' in the following formula cannot exceed 5 percent in one month, for any two consecutive months.

$$V = \frac{c + d + e}{a + b} \times 100$$

where:

a = number of instances where the residual disinfectant concentration is measured;

b = number of instances where the residual disinfectant concentration is not measured but heterotrophic bacteria plate count (HPC) is measured;

c = number of instances where the residual disinfectant concentration is measured but not detected and no HPC is measured;

d = number of instances where the residual disinfectant concentration is measured but not detected and where the HPC is >500/ml; and

e = number of instances where the residual disinfectant concentration is not measured and HPC is >500/ml.

(ii) If the State determines, based on site-specific considerations, that a system has no means for having a sample transported and analyzed for HPC by a certified laboratory under the requisite time and temperature conditions specified by §141.74(a)(1) and that the system is providing adequate disinfection in the distribution system, the requirements of paragraph (a)(4)(i) of this section do not apply to that system.

(b) *Disinfection requirements for public water systems which provide filtration.* Each public water system that provides filtration treatment must provide disinfection treatment as follows.

(1) The disinfection treatment must be sufficient to ensure that the total treatment processes of that system achieve at least 99.9 percent (3-log) inactivation and/or removal of *Giardia lamblia* cysts and at least 99.99 percent (4-log) inactivation and/or removal of viruses, as determined by the State.

(2) The residual disinfectant concentration in the water entering the distribution system, measured as specified in §141.74 (a)(2) and (c)(2), cannot be less than 0.2 mg/l for more than 4 hours.

(3)(i) The residual disinfectant concentration in the distribution system, measured as total chlorine, combined chlorine, or chlorine dioxide, as specified in §141.74 (a)(2) and (c)(3), cannot be undetectable in more than 5 percent of the samples each month, for any two consecutive months that the system serves water to the public. Water in the distribution system with a heterotrophic bacteria concentration less than or equal to 500/ml, measured as heterotrophic plate count (HPC) as specified in §141.74(a)(1), is deemed to have a detectable disinfectant residual for purposes of determining compliance with this requirement. Thus, the value ''V'' in the following formula cannot exceed 5 percent in one month, for any two consecutive months.

$$V = \frac{c + d + e}{a + b} \times 100$$

where:

a = number of instances where the residual disinfectant concentration is measured;

b = number of instances where the residual disinfectant concentration is not measured but heterotrophic bacteria plate count (HPC) is measured;

c = number of instances where the residual disinfectant concentration is measured but not detected and no HPC is measured;

d = number of instances where no residual disinfectant concentration is detected and where the HPC is >500/ml; and

e = number of instances where the residual disinfectant concentration is not measured and HPC is >500/ml.

(ii) If the State determines, based on site-specific considerations, that a system has no means for having a sample transported and analyzed for HPC by a certified laboratory under the requisite

time and temperature conditions specified in § 141.74(a)(1) and that the system is providing adequate disinfection in the distribution system, the requirements of paragraph (b)(3)(i) of this section do not apply.

[54 FR 27527, June 29, 1989, as amended at 69 FR 38855, June 29, 2004]

§ 141.73 Filtration.

A public water system that uses a surface water source or a ground water source under the direct influence of surface water, and does not meet all of the criteria in § 141.71 (a) and (b) for avoiding filtration, must provide treatment consisting of both disinfection, as specified in § 141.72(b), and filtration treatment which complies with the requirements of paragraph (a), (b), (c), (d), or (e) of this section by June 29, 1993, or within 18 months of the failure to meet any one of the criteria for avoiding filtration in § 141.71 (a) and (b), whichever is later. Failure to meet any requirement of this section after the date specified in this introductory paragraph is a treatment technique violation.

(a) *Conventional filtration treatment or direct filtration.* (1) For systems using conventional filtration or direct filtration, the turbidity level of representative samples of a system's filtered water must be less than or equal to 0.5 NTU in at least 95 percent of the measurements taken each month, measured as specified in § 141.74 (a)(1) and (c)(1), except that if the State determines that the system is capable of achieving at least 99.9 percent removal and/or inactivation of *Giardia lamblia* cysts at some turbidity level higher than 0.5 NTU in at least 95 percent of the measurements taken each month, the State may substitute this higher turbidity limit for that system. However, in no case may the State approve a turbidity limit that allows more than 1 NTU in more than 5 percent of the samples taken each month, measured as specified in § 141.74 (a)(1) and (c)(1).

(2) The turbidity level of representative samples of a system's filtered water must at no time exceed 5 NTU, measured as specified in § 141.74 (a)(1) and (c)(1).

(3) Beginning January 1, 2002, systems serving at least 10,000 people must meet the turbidity requirements in § 141.173(a).

(4) Beginning January 1, 2005, systems serving fewer than 10,000 people must meet the turbidity requirements in §§ 141.550 through 141.553.

(b) *Slow sand filtration.* (1) For systems using slow sand filtration, the turbidity level of representative samples of a system's filtered water must be less than or equal to 1 NTU in at least 95 percent of the measurements taken each month, measured as specified in § 141.74 (a)(1) and (c)(1), except that if the State determines there is no significant interference with disinfection at a higher turbidity level, the State may substitute this higher turbidity limit for that system.

(2) The turbidity level of representative samples of a system's filtered water must at no time exceed 5 NTU, measured as specified in § 141.74 (a)(1) and (c)(1).

(c) *Diatomaceous earth filtration.* (1) For systems using diatomaceous earth filtration, the turbidity level of representative samples of a system's filtered water must be less than or equal to 1 NTU in at least 95 percent of the measurements taken each month, measured as specified in § 141.74 (a)(1) and (c)(1).

(2) The turbidity level of representative samples of a system's filtered water must at no time exceed 5 NTU, measured as specified in § 141.74 (a)(1) and (c)(1).

(d) *Other filtration technologies.* A public water system may use a filtration technology not listed in paragraphs (a) through (c) of this section if it demonstrates to the State, using pilot plant studies or other means, that the alternative filtration technology, in combination with disinfection treatment that meets the requirements of § 141.72(b), consistently achieves 99.9 percent removal and/or inactivation of *Giardia lamblia* cysts and 99.99 percent removal and/or inactivation of viruses. For a system that makes this demonstration, the requirements of paragraph (b) of this section apply. Beginning January 1, 2002, systems serving at least 10,000 people must meet the requirements for other filtration technologies in § 141.173(b). Beginning January 14, 2005, systems serving fewer than

10,000 people must meet the requirements for other filtration technologies in § 141.550 through 141.553.

[54 FR 27527, June 29, 1989, as amended at 63 FR 69516, Dec. 16, 1998; 66 FR 3776, Jan. 16, 2001; 67 FR 1836, Jan. 14, 2002; 69 FR 38855, June 29, 2004]

§ 141.74 Analytical and monitoring requirements.

(a) *Analytical requirements.* Only the analytical method(s) specified in this paragraph, or otherwise approved by EPA, may be used to demonstrate compliance with §§ 141.71, 141.72 and 141.73. Measurements for pH, turbidity, temperature and residual disinfectant concentrations must be conducted by a person approved by the State. Measurement for total coliforms, fecal coliforms and HPC must be conducted by a laboratory certified by the State or EPA to do such analysis. Until laboratory certification criteria are developed for the analysis of fecal coliforms and HPC, any laboratory certified for total coliforms analysis by the State or EPA is deemed certified for fecal coliforms and HPC analysis. The following procedures shall be conducted in accordance with the publications listed in the following section. This incorporation by reference was approved by the Director of the Federal Register in accordance with 5 U.S.C. 552(a) and 1 CFR part 51. Copies of the methods published in *Standard Methods for the Examination of Water and Wastewater* may be obtained from the American Public Health Association et al., 1015 Fifteenth Street, NW., Washington, DC 20005; copies of the Minimal Medium ONPG-MUG Method as set forth in the article ''National Field Evaluation of a Defined Substrate Method for the Simultaneous Enumeration of Total Coliforms and *Esherichia coli* from Drinking Water: Comparison with the Standard Multiple Tube Fermentation Method'' (Edberg et al.), Applied and Environmental Microbiology, Volume 54, pp. 1595–1601, June 1988 (as amended under Erratum, Applied and Environmental Microbiology, Volume 54, p. 3197, December, 1988), may be obtained from the American Water Works Association Research Foundation, 6666 West Quincy Avenue, Denver, Colorado, 80235; and copies of the Indigo Method as set forth in the article ''Determination of Ozone in Water by the Indigo Method'' (Bader and Hoigne), may be obtained from Ozone Science & Engineering, Pergamon Press Ltd., Fairview Park, Elmsford, New York 10523. Copies may be inspected at the U.S. Environmental Protection Agency, Room EB15, 401 M St., SW., Washington, DC 20460 or at the National Archives and Records Administration (NARA). For information on the availability of this material at NARA, call 202–741–6030, or go to: *http://www.archives.gov/federal_register/code_of_federal_regulations/ibr_locations.html.*

(1) Public water systems must conduct analysis of pH and temperature in accordance with one of the methods listed at § 141.23(k)(1). Public water systems must conduct analysis of total coliforms, fecal coliforms, heterotrophic bacteria, and turbidity in accordance with one of the following analytical methods or one of the alternative methods listed in appendix A to subpart C of this part and by using analytical test procedures contained in *Technical Notes on Drinking Water Methods,* EPA–600/R–94–173, October 1994. This document is available from the National Service Center for Environmental Publications (NSCEP), P.O. Box 42419, Cincinnati, OH 45242–0419 or *http://www.epa.gov/nscep/.*

Organism	Methodology	Citation [1]
Total Coliform [2]	Total Coliform Fermentation Technique [3 4 5].	9221 A, B, C
	Total Coliform Membrane Filter Technique [6].	9222 A, B, C
	ONPG-MUG Test [7]	9223
Fecal Coliforms [2] ...	Fecal Coliform Procedure [8].	9221 E
	Fecal Coliform Filter Procedure.	9222 D
Heterotrophic bacteria [2].	Pour Plate Method	9215 B
	SimPlate [11].	
Turbidity [13]	Nephelometric Method.	2130 B
	Nephelometric Method.	180.1 [9]
	Great Lakes Instruments.	Method 2 [10]

Organism	Methodology	Citation [1]
	Hach FilterTrak	10133 [12]

The procedures shall be done in accordance with the documents listed below. The incorporation by reference of the following documents listed in footnotes 1, 6, 7 and 9–12 was approved by the Director of the Federal Register in accordance with 5 U.S.C. 552(a) and 1 CFR part 51. Copies of the documents may be obtained from the sources listed below. Information regarding obtaining these documents can be obtained from the Safe Drinking Water Hotline at 800–426–4791. Documents may be inspected at EPA's Drinking Water Docket, 1301 Constitution Avenue, NW., EPA West, Room B102, Washington DC 20460 (Telephone: 202–566–2426); or at the National Archives and Records Administration (NARA). For information on the availability of this material at NARA, call 202–741–6030, or go to: *http://www.archives.gov/federal_register/code_of_federal_regulations/ibr_locations.html.*

[1] Except where noted, all methods refer to *Standard Methods for the Examination of Water and Wastewater,* 18th edition (1992), 19th edition (1995), or 20th edition (1998), American Public Health Association, 1015 Fifteenth Street, NW., Washington, DC 20005. The cited methods published in any of these three editions may be used. In addition, the following online versions may also be used: 2130 B–01, 9215 B–00, 9221 A, B, C, E–99, 9222 A, B, C, D–97, and 9223 B–97. Standard Methods Online are available at *http://www.standardmethods.org.* The year in which each method was approved by the Standard Methods Committee is designated by the last two digits in the method number. The methods listed are the only Online versions that may be used.

[2] The time from sample collection to initiation of analysis may not exceed 8 hours. Systems must hold samples below 10 deg. C during transit.

[3] Lactose broth, as commercially available, may be used in lieu of lauryl tryptose broth, if the system conducts at least 25 parallel tests between this medium and lauryl tryptose broth using the water normally tested, and this comparison demonstrates that the false-positive rate and false-negative rate for total coliform, using lactose broth, is less than 10 percent.

[4] Media should cover inverted tubes at least one-half to two-thirds after the sample is added.

[5] No requirement exists to run the completed phase on 10 percent of all total coliform-positive confirmed tubes.

[6] MI agar also may be used. Preparation and use of MI agar is set forth in the article, ''New medium for the simultaneous detection of total coliform and *Escherichia coli* in water'' by Brenner, K.P., et. al., 1993, Appl. Environ. Microbiol. 59:3534–3544. Also available from the Office of Water Resource Center (RC–4100T), 1200 Pennsylvania Avenue, NW., Washington DC 20460, EPA/600/J–99/225. Verification of colonies is not required.

[7] The ONPG-MUG Test is also known as the Autoanalysis Colilert System.

[8] A–1 broth may be held up to 7 days in a tightly closed screw cap tube at 4 °C.

[9] ''Methods for the Determination of Inorganic Substances in Environmental Samples'', EPA/600/R–93/100, August 1993. Available at NTIS, PB94–121811.

[10] GLI Method 2, ''Turbidity,'' November 2, 1992, Great Lakes Instruments, Inc., 8855 North 55th Street, Milwaukee, WI 53223.

[11] A description of the SimPlate method, ''IDEXX SimPlate TM HPC Test Method for Heterotrophs in Water,'' November 2000, can be obtained from IDEXX Laboratories, Inc., 1 IDEXX Drive, Westbrook, ME 04092, telephone (800) 321–0207.

[12] A description of the Hach FilterTrak Method 10133, ''Determination of Turbidity by Laser Nephelometry,'' January 2000, Revision 2.0, can be obtained from; Hach Co., P.O. Box 389, Loveland, CO 80539–0389, telephone: 800–227–4224.

[13] Styrene divinyl benzene beads (e.g., AMCO-AEPA–1 or equivalent) and stabilized formazin (e.g., Hach StablCal™ or equivalent) are acceptable substitutes for formazin.

(2) Public water systems must measure residual disinfectant concentrations with one of the analytical methods in the following table or one of the alternative methods listed in appendix A to subpart C of this part. If approved by the State, residual disinfectant concentrations for free chlorine and combined chlorine also may be measured by using DPD colorimetric test kits. In addition States may approve the use of the ITS free chlorine test strip for the determination of free chlorine. Use of the test strips is described in Method D99–003, ''Free Chlorine Species ($HOCl^-$ and OCl^-) by Test Strip,'' Revision 3.0, November 21, 2003, available from Industrial Test Systems, Inc., 1875 Langston St., Rock Hill, SC 29730. Free and total chlorine residuals may be measured continuously by adapting a specified chlorine residual method for use with a continuous monitoring instrument provided the chemistry, accuracy, and precision remain the same. Instruments used for continuous monitoring must be calibrated with a grab sample measurement at least every five days, or with a protocol approved by the State.

Residual	Methodology	SM [1]	SM Online [2]	Other
Free Chlorine	Amperometric Titration	4500–Cl D	4500–Cl D–00	D1253–03 [3]
	DPD Ferrous Titrimetric	4500–Cl F	4500–Cl F–00.	
	DPD Colorimetric	4500–Cl G	4500–Cl G–00.	
	Syringaldazine (FACTS)	4500–Cl H	4500–Cl H–00.	
Total Chlorine	Amperometric Titration	4500–Cl D	4500–Cl D–00	D1253–03 [3]
	Amperometric Titration (low level measurement)	4500–Cl E	4500–Cl E–00.	
	DPD Ferrous Titrimetric	4500–Cl F	4500–Cl F–00.	
	DPD Colorimetric	4500–Cl G	4500–Cl G–00.	
	Iodometric Electrode	4500–Cl I	4500–Cl I–00.	
Chlorine Dioxide	Amperometric Titration	4500–ClO_2 C	4500–ClO_2 C–00.	
	DPD Method	4500–ClO_2 D.		
	Amperometric Titration	4500–ClO_2 E	4500–ClO_2 E–00.	
	Spectrophotometric			327.0, Revision 1.1 [4]
Ozone	Indigo Method	4500–O_3 B	4500–O_3 B–97.	

[1] All the listed methods are contained in the 18th, 19th, and 20th editions of *Standard Methods for the Examination of Water and Wastewater,* 1992, 1995, and 1998; the cited methods published in any of these three editions may be used.

[2] Standard Methods Online are available at *http://www.standardmethods.org.* The year in which each method was approved by the Standard Methods Committee is designated by the last two digits in the method number. The methods listed are the only Online versions that may be used.

[3] *Annual Book of ASTM Standards,* Vol. 11.01, 2004 ; ASTM International; any year containing the cited version of the method may be used. Copies of this method may be obtained from ASTM International, 100 Barr Harbor Drive, P.O. Box C700 West Conshohocken, PA 19428–2959.

[4] EPA Method 327.0, Revision 1.1, "Determination of Chlorine Dioxide and Chlorite Ion in Drinking Water Using Lissamine Green B and Horseradish Peroxidase with Detection by Visible Spectrophotometry," USEPA, May 2005, EPA 815–R–05–008. Available online at *http://www.epa.gov/safewater/methods/sourcalt.html.*

(b) *Monitoring requirements for systems that do not provide filtration.* A public water system that uses a surface water source and does not provide filtration treatment must begin monitoring, as specified in this paragraph (b), beginning December 31, 1990, unless the State has determined that filtration is required in writing pursuant to §1412(b)(7)(C)(iii), in which case the State may specify alternative monitoring requirements, as appropriate, until filtration is in place. A public water system that uses a ground water source under the direct influence of surface water and does not provide filtration treatment must begin monitoring as specified in this paragraph (b) beginning December 31, 1990, or 6 months after the State determines that the ground water source is under the direct influence of surface water, whichever is later, unless the State has determined that filtration is required in writing pursuant to §1412(b)(7)(C)(iii), in which case the State may specify alternative monitoring requirements, as appropriate, until filtration is in place.

(1) Fecal coliform or total coliform density measurements as required by §141.71(a)(1) must be performed on representative source water samples immediately prior to the first or only point of disinfectant application. The system must sample for fecal or total coliforms at the following minimum frequency each week the system serves water to the public:

System size (persons served)	Samples/week [1]
≤500	1
501 to 3,300	2
3,301 to 10,000	3
10,001 to 25,000	4
>25,000	5

[1] Must be taken on separate days.

Also, one fecal or total coliform density measurement must be made every day the system serves water to the public and the turbidity of the source water exceeds 1 NTU (these samples count towards the weekly coliform sampling requirement) unless the State determines that the system, for logistical reasons outside the system's control, cannot have the sample analyzed within 30 hours of collection.

(2) Turbidity measurements as required by §141.71(a)(2) must be performed on representative grab samples of source water immediately prior to the first or only point of disinfectant application every four hours (or more frequently) that the system serves water to the public. A public water system may substitute continuous turbidity monitoring for grab sample monitoring if it validates the continuous measurement for accuracy on a regular basis using a protocol approved by the State.

(3) The total inactivation ratio for each day that the system is in operation must be determined based on the $CT_{99.9}$ values in tables 1.1–1.6, 2.1, and 3.1 of this section, as appropriate. The parameters necessary to determine the total inactivation ratio must be monitored as follows:

(i) The temperature of the disinfected water must be measured at least once per day at each residual disinfectant concentration sampling point.

(ii) If the system uses chlorine, the pH of the disinfected water must be measured at least once per day at each chlorine residual disinfectant concentration sampling point.

(iii) The disinfectant contact time(s) (''T'') must be determined for each day during peak hourly flow.

(iv) The residual disinfectant concentration(s) (''C'') of the water before or at the first customer must be measured each day during peak hourly flow.

(v) If a system uses a disinfectant other than chlorine, the system may demonstrate to the State, through the use of a State-approved protocol for on-site disinfection challenge studies or other information satisfactory to the State, that $CT_{99.9}$ values other than those specified in tables 2.1 and 3.1 in this section other operational parameters are adequate to demonstrate that the system is achieving the minimum inactivation rates required by §141.72(a)(1).

TABLE 1.1—CT VALUES ($CT_{99.9}$) FOR 99.9 PERCENT INACTIVATION OF GIARDIA LAMBLIA CYSTS BY FREE CHLORINE AT 0.5 °C OR LOWER [1]

Residual (mg/l)	pH						
	≤6.0	6.5	7.0	7.5	8.0	8.5	≤9.0
≤0.4 ...	137	163	195	237	277	329	390
0.6	141	168	200	239	286	342	407
0.8	145	172	205	246	295	354	422
1.0	148	176	210	253	304	365	437
1.2	152	180	215	259	313	376	451
1.4	155	184	221	266	321	387	464
1.6	157	189	226	273	329	397	477
1.8	162	193	231	279	338	407	489
2.0	165	197	236	286	346	417	500
2.2	169	201	242	297	353	426	511
2.4	172	205	247	298	361	435	522
2.6	175	209	252	304	368	444	533
2.8	178	213	257	310	375	452	543
3.0	181	217	261	316	382	460	552

[1] These CT values achieve greater than a 99.99 percent inactivation of viruses. CT values between the indicated pH values may be determined by linear interpolation. CT values between the indicated temperatures of different tables may be determined by linear interpolation. If no interpolation is used, use the $CT_{99.9}$ value at the lower temperature and at the higher pH.

TABLE 1.2—CT VALUES ($CT_{99.9}$) FOR 99.9 PERCENT INACTIVATION OF GIARDIA LAMBLIA CYSTS BY FREE CHLORINE AT 5.0 °C [1]

Free residual (mg/l)	pH						
	≤6.0	6.5	7.0	7.5	8.0	8.5	≤9.0
≤0.4 ...	97	117	139	166	198	236	279
0.6 ..	100	120	143	171	204	244	291
0.8 ..	103	122	146	175	210	252	301
1.0 ..	105	125	149	179	216	260	312
1.2 ..	107	127	152	183	221	267	320
1.4 ..	109	130	155	187	227	274	329
1.6 ..	111	132	158	192	232	281	337
1.8 ..	114	135	162	196	238	287	345
2.0 ..	116	138	165	200	243	294	353
2.2 ..	118	140	169	204	248	300	361
2.4 ..	120	143	172	209	253	306	368
2.6 ..	122	146	175	213	258	312	375
2.8 ..	124	148	178	217	263	318	382
3.0 ..	126	151	182	221	268	324	389

[1] These CT values achieve greater than a 99.99 percent inactivation of viruses. CT values between the indicated pH values may be determined by linear interpolation. CT values between the indicated temperatures of different tables may be determined by linear interpolation. If no interpolation is used, use the $CT_{99.9}$ value at the lower temperature, and at the higher pH.

TABLE 1.3—CT VALUES ($CT_{99.9}$) FOR 99.9 PERCENT INACTIVATION OF GIARDIA LAMBLIA CYSTS BY FREE CHLORINE AT 10.0 °C [1]

Free residual (mg/l)	pH						
	≤6.0	6.5	7.0	7.5	8.0	8.5	≤9.0
≤0.4 ...	73	88	104	125	149	177	209
0.6 ..	75	90	107	128	153	183	218
0.8 ..	78	92	110	131	158	189	226
1.0 ..	79	94	112	134	162	195	234

TABLE 1.3—CT VALUES ($CT_{99.9}$) FOR 99.9 PERCENT INACTIVATION OF GIARDIA LAMBLIA CYSTS BY FREE CHLORINE AT 10.0 °C [1]—Continued

Free residual (mg/l)	pH						
	≤6.0	6.5	7.0	7.5	8.0	8.5	≤9.0
1.2 ..	80	95	114	137	166	200	240
1.4 ..	82	98	116	140	170	206	247
1.6 ..	83	99	119	144	174	211	253
1.8 ..	86	101	122	147	179	215	259
2.0 ..	87	104	124	150	182	221	265
2.2 ..	89	105	127	153	186	225	271
2.4 ..	90	107	129	157	190	230	276
2.6 ..	92	110	131	160	194	234	281
2.8 ..	93	111	134	163	197	239	287
3.0 ..	95	113	137	166	201	243	292

[1] These CT values achieve greater than a 99.99 percent inactivation of viruses. CT values between the indicated pH values may be determined by linear interpolation. CT values between the indicated temperatures of different tables may be determined by linear interpolation. If no interpolation is used, use the $CT_{99.9}$ value at the lower temperature, and at the higher pH.

TABLE 1.4—CT VALUES ($CT_{99.9}$) FOR 99.9 PERCENT INACTIVATION OF GIARDIA LAMBLIA CYSTS BY FREE CHLORINE AT 15.0 °C [1]

Free residual (mg/l)	pH						
	≤6.0	6.5	7.0	7.5	8.0	8.5	≤9.0
≤0.4 ...	49	59	70	83	99	118	140
0.6 ..	50	60	72	86	102	122	146
0.8 ..	52	61	73	88	105	126	151
1.0 ..	53	63	75	90	108	130	156
1.2 ..	54	64	76	92	111	134	160
1.4 ..	55	65	78	94	114	137	165
1.6 ..	56	66	79	96	116	141	169
1.8 ..	57	68	81	98	119	144	173
2.0 ..	58	69	83	100	122	147	177
2.2 ..	59	70	85	102	124	150	181
2.4 ..	60	72	86	105	127	153	184
2.6 ..	61	73	88	107	129	156	188
2.8 ..	62	74	89	109	132	159	191
3.0 ..	63	76	91	111	134	162	195

[1] These CT values achieve greater than a 99.99 percent inactivation of viruses. CT values between the indicated pH values may be determined by linear interpolation. CT values between the indicated temperatures of different tables may be determined by linear interpolation. If no interpolation is used, use the $CT_{99.9}$ value at the lower temperature, and at the higher pH.

TABLE 1.5—CT VALUES ($CT_{99.9}$) FOR 99.9 PERCENT INACTIVATION OF GIARDIA LAMBLIA CYSTS BY FREE CHLORINE AT 20 °C [1]

Free residual (mg/l)	pH						
	≤6.0	6.5	7.0	7.5	8.0	8.5	≤9.0
≤0.4 ...	36	44	52	62	74	89	105
0.6	38	45	54	64	77	92	109
0.8	39	46	55	66	79	95	113
1.0	39	47	56	67	81	98	117
1.2	40	48	57	69	83	100	120
1.4	41	49	58	70	85	103	123
1.6	42	50	59	72	87	105	126

TABLE 1.5—CT VALUES ($CT_{99.9}$) FOR 99.9 PERCENT INACTIVATION OF GIARDIA LAMBLIA CYSTS BY FREE CHLORINE AT 20 °C [1]—Continued

Free residual (mg/l)	pH						
	≤6.0	6.5	7.0	7.5	8.0	8.5	≤9.0
1.8	43	51	61	74	89	108	129
2.0	44	52	62	75	91	110	132
2.2	44	53	63	77	93	113	135
2.4	45	54	65	78	95	115	138
2.6	46	55	66	80	97	117	141
2.8	47	56	67	81	99	119	143
3.0	47	57	68	83	101	122	146

[1] These CT values achieve greater than a 99.99 percent inactivation of viruses. CT values between the indicated pH values may be determined by linear interpolation. CT values between the indicated temperatures of different tables may be determined by linear interpolation. If no interpolation is used, use the $CT_{99.9}$ value at the lower temperature, and at the higher pH.

TABLE 1.6—CT VALUES ($CT_{99.9}$) FOR 99.9 PERCENT INACTIVATION OF GIARDIA LAMBLIA CYSTS BY FREE CHLORINE AT 25 °C [1] AND HIGHER

Free residual (mg/l)	pH						
	≤6.0	6.5	7.0	7.5	8.0	8.5	≤9.0
≤0.4 ...	24	29	35	42	50	59	70
0.6	25	30	36	43	51	61	73
0.8	26	31	37	44	53	63	75
1.0	26	31	37	45	54	65	78
1.2	27	32	38	46	55	67	80
1.4	27	33	39	47	57	69	82
1.6	28	33	40	48	58	70	84
1.8	29	34	41	49	60	72	86
2.0	29	35	41	50	61	74	88
2.2	30	35	42	51	62	75	90
2.4	30	36	43	52	63	77	92
2.6	31	37	44	53	65	78	94
2.8	31	37	45	54	66	80	96
3.0	32	38	46	55	67	81	97

[1] These CT values achieve greater than a 99.99 percent inactivation of viruses. CT values between the indicated pH values may be determined by linear interpolation. CT values between the indicated temperatures of different tables may be determined by linear interpolation. If no interpolation is used, use the $CT_{99.9}$ value at the lower temperature, and at the higher pH.

TABLE 2.1—CT VALUES ($CT_{99.9}$) FOR 99.9 PERCENT INACTIVATION OF GIARDIA LAMBLIA CYSTS BY CHLORINE DIOXIDE AND OZONE [1]

	Temperature					
	<1 °C	5 °C	10 °C	15 °C	20 °C	≥25 °C
Chlorine dioxide	63	26	23	19	15	11
Ozone	2.9	1.9	1.4	0.95	0.72	0.48

[1] These CT values achieve greater than 99.99 percent inactivation of viruses. CT values between the indicated temperatures may be determined by linear interpolation. If no interpolation is used, use the $CT_{99.9}$ value at the lower temperature for determining $CT_{99.9}$ values between indicated temperatures.

TABLE 3.1—CT VALUES ($CT_{99.9}$) FOR 99.9 PERCENT INACTIVATION OF GIARDIA LAMBLIA CYSTS BY CHLORAMINES [1]

Temperature					
<1 °C	5 °C	10 °C	15 °C	20 °C	25 °C
3,800	2,200	1,850	1,500	1,100	750

[1] These values are for pH values of 6 to 9. These CT values may be assumed to achieve greater than 99.99 percent inactivation of viruses only if chlorine is added and mixed in the water prior to the addition of ammonia. If this condition is not met, the system must demonstrate, based on on-site studies or other information, as approved by the State, that the system is achieving at least 99.99 percent inactivation of viruses. CT values between the indicated temperatures may be determined by linear interpolation. If no interpolation is used, use the $CT_{99.9}$ value at the lower temperature for determining $CT_{99.9}$ values between indicated temperatures.

(4) The total inactivation ratio must be calculated as follows:

(i) If the system uses only one point of disinfectant application, the system may determine the total inactivation ratio based on either of the following two methods:

(A) One inactivation ratio ($CTcalc/CT_{99.9}$) is determined before or at the first customer during peak hourly flow and if the $CTcalc/CT_{99.9} \geq 1.0$, the 99.9 percent *Giardia lamblia* inactivation requirement has been achieved; or

(B) Successive $CTcalc/CT_{99.9}$ values, representing sequential inactivation ratios, are determined between the point of disinfectant application and a point before or at the first customer during peak hourly flow. Under this alternative, the following method must be used to calculate the total inactivation ratio:

(1) Determine $\frac{CTcalc}{CT_{99.9}}$ for each sequence.

(2) Add the $\frac{CTcalc}{CT_{99.9}}$ values together $\left(\sum \frac{(CTcalc)}{CT_{99.9}}\right)$

(3) If $\sum \left(\frac{CTcalc}{CT_{99.9}}\right) \geq 1.0$, the 99.9 percent *Giardia lamblia* inactivation requirement has been achieved.

(ii) If the system uses more than one point of disinfectant application before or at the first customer, the system must determine the CT value of each disinfection sequence immediately prior to the next point of disinfectant application during peak hourly flow. The CTcalc/$CT_{99.9}$ value of each sequence and

$$\sum \frac{CTcalc}{CT_{99.9}}$$

must be calculated using the method in paragraph (b)(4)(i)(B) of this section to determine if the system is in compliance with §141.72(a).

(iii) Although not required, the total percent inactivation for a system with one or more points of residual disinfectant concentration monitoring may be calculated by solving the following equation:

$$\text{Percent inactivation} = 100 - \frac{100}{10^z}$$

$$\text{where } z = 3 \times \sum \left(\frac{CTcalc}{CT_{99.9}}\right)$$

(5) The residual disinfectant concentration of the water entering the distribution system must be monitored continuously, and the lowest value must be recorded each day, except that if there is a failure in the continuous monitoring equipment, grab sampling every 4 hours may be conducted in lieu of continuous monitoring, but for no more than 5 working days following the failure of the equipment, and systems serving 3,300 or fewer persons may take grab samples in lieu of providing continuous monitoring on an ongoing basis at the frequencies prescribed below:

System size by population	Samples/day [1]
<500	1
501 to 1,000	2
1,001 to 2,500	3
2,501 to 3,300	4

[1] The day's samples cannot be taken at the same time. The sampling intervals are subject to State review and approval.

If at any time the residual disinfectant concentration falls below 0.2 mg/l in a system using grab sampling in lieu of continuous monitoring, the system must take a grab sample every 4 hours until the residual concentration is equal to or greater than 0.2 mg/l.

(6)(i) Until March 31, 2016, the residual disinfectant concentration must be measured at least at the same points in the distribution system and at the same time as total coliforms are sampled, as specified in §141.21. Beginning April 1, 2016, the residual disinfectant concentration must be measured at least at the same points in the distribution system and at the same time as total coliforms are sampled, as specified in §§141.854 through 141.858. The State may allow a public water system which uses both a surface water source or a ground water source under direct influence of surface water, and a ground water source, to take disinfectant residual samples at points other than the total coliform sampling points if the State determines that such points are more representative of treated (disinfected) water quality within the distribution system. Heterotrophic bacteria, measured as heterotrophic plate count (HPC) as

specified in paragraph (a)(1) of this section, may be measured in lieu of residual disinfectant concentration.

(ii) If the State determines, based on site-specific considerations, that a system has no means for having a sample transported and analyzed for HPC by a certified laboratory under the requisite time and temperature conditions specified by paragraph (a)(1) of this section and that the system is providing adequate disinfection in the distribution system, the requirements of paragraph (b)(6)(i) of this section do not apply to that system.

(c) *Monitoring requirements for systems using filtration treatment.* A public water system that uses a surface water source or a ground water source under the influence of surface water and provides filtration treatment must monitor in accordance with this paragraph (c) beginning June 29, 1993, or when filtration is installed, whichever is later.

(1) Turbidity measurements as required by §141.73 must be performed on representative samples of the system's filtered water every four hours (or more frequently) that the system serves water to the public. A public water system may substitute continuous turbidity monitoring for grab sample monitoring if it validates the continuous measurement for accuracy on a regular basis using a protocol approved by the State. For any systems using slow sand filtration or filtration treatment other than conventional treatment, direct filtration, or diatomaceous earth filtration, the State may reduce the sampling frequency to once per day if it determines that less frequent monitoring is sufficient to indicate effective filtration performance. For systems serving 500 or fewer persons, the State may reduce the turbidity sampling frequency to once per day, regardless of the type of filtration treatment used, if the State determines that less frequent monitoring is sufficient to indicate effective filtration performance.

(2) The residual disinfectant concentration of the water entering the distribution system must be monitored continuously, and the lowest value must be recorded each day, except that if there is a failure in the continuous monitoring equipment, grab sampling every 4 hours may be conducted in lieu of continuous monitoring, but for no more than 5 working days following the failure of the equipment, and systems serving 3,300 or fewer persons may take grab samples in lieu of providing continuous monitoring on an ongoing basis at the frequencies each day prescribed below:

System size by population	Samples/day [1]
±500	1
501 to 1,000	2
1,001 to 2,500	3
2,501 to 3,300	4

[1] The day's samples cannot be taken at the same time. The sampling intervals are subject to State review and approval.

If at any time the residual disinfectant concentration falls below 0.2 mg/l in a system using grab sampling in lieu of continuous monitoring, the system must take a grab sample every 4 hours until the residual disinfectant concentration is equal to or greater than 0.2 mg/l.

(3)(i) Until March 31, 2016, the residual disinfectant concentration must be measured at least at the same points in the distribution system and at the same time as total coliforms are sampled, as specified in §141.21. Beginning April 1, 2016, the residual disinfectant concentration must be measured at least at the same points in the distribution system and at the same time as total coliforms are sampled, as specified in §§141.854 through 141.858. The State may allow a public water system which uses both a surface water source or a ground water source under direct influence of surface water, and a ground water source, to take disinfectant residual samples at points other than the total coliform sampling points if the State determines that such points are more representative of treated (disinfected) water quality within the distribution system. Heterotrophic bacteria, measured as heterotrophic plate count (HPC) as specified in paragraph (a)(1) of this section, may be measured in lieu of residual disinfectant concentration.

(ii) If the State determines, based on site-specific considerations, that a system has no means for having a sample transported and analyzed for HPC by a certified laboratory under the requisite

time and temperature conditions specified by paragraph (a)(1) of this section and that the system is providing adequate disinfection in the distribution system, the requirements of paragraph (c)(3)(i) of this section do not apply to that system.

[54 FR 27527, June 29, 1989, as amended at 59 FR 62470, Dec. 5, 1994; 60 FR 34086, June 29, 1995; 64 FR 67465, Dec. 1, 1999; 67 FR 65252, Oct. 23, 2002; 67 FR 65901, Oct. 29, 2002; 69 FR 38856, June 29, 2004; 72 FR 11247, Mar. 12, 2007; 74 FR 30958, June 29, 2009; 78 FR 10347, Feb. 13, 2013]

§ 141.75 Reporting and recordkeeping requirements.

(a) A public water system that uses a surface water source and does not provide filtration treatment must report monthly to the State the information specified in this paragraph (a) beginning December 31, 1990, unless the State has determined that filtration is required in writing pursuant to section 1412(b)(7)(C)(iii), in which case the State may specify alternative reporting requirements, as appropriate, until filtration is in place. A public water system that uses a ground water source under the direct influence of surface water and does not provide filtration treatment must report monthly to the State the information specified in this paragraph (a) beginning December 31, 1990, or 6 months after the State determines that the ground water source is under the direct influence of surface water, whichever is later, unless the State has determined that filtration is required in writing pursuant to § 1412(b)(7)(C)(iii), in which case the State may specify alternative reporting requirements, as appropriate, until filtration is in place.

(1) Source water quality information must be reported to the State within 10 days after the end of each month the system serves water to the public. Information that must be reported includes:

(i) The cumulative number of months for which results are reported.

(ii) The number of fecal and/or total coliform samples, whichever are analyzed during the month (if a system monitors for both, only fecal coliforms must be reported), the dates of sample collection, and the dates when the turbidity level exceeded 1 NTU.

(iii) The number of samples during the month that had equal to or less than 20/100 ml fecal coliforms and/or equal to or less than 100/100 ml total coliforms, whichever are analyzed.

(iv) The cumulative number of fecal or total coliform samples, whichever are analyzed, during the previous six months the system served water to the public.

(v) The cumulative number of samples that had equal to or less than 20/100 ml fecal coliforms or equal to or less than 100/100 ml total coliforms, whichever are analyzed, during the previous six months the system served water to the public.

(vi) The percentage of samples that had equal to or less than 20/100 ml fecal coliforms or equal to or less than 100/100 ml total coliforms, whichever are analyzed, during the previous six months the system served water to the public.

(vii) The maximum turbidity level measured during the month, the date(s) of occurrence for any measurement(s) which exceeded 5 NTU, and the date(s) the occurrence(s) was reported to the State.

(viii) For the first 12 months of recordkeeping, the dates and cumulative number of events during which the turbidity exceeded 5 NTU, and after one year of recordkeeping for turbidity measurements, the dates and cumulative number of events during which the turbidity exceeded 5 NTU in the previous 12 months the system served water to the public.

(ix) For the first 120 months of recordkeeping, the dates and cumulative number of events during which the turbidity exceeded 5 NTU, and after 10 years of recordkeeping for turbidity measurements, the dates and cumulative number of events during which the turbidity exceeded 5 NTU in the previous 120 months the system served water to the public.

(2) Disinfection information specified in § 141.74(b) must be reported to the State within 10 days after the end of each month the system serves water to the public. Information that must be reported includes:

(i) For each day, the lowest measurement of residual disinfectant concentration in mg/l in water entering the distribution system.

(ii) The date and duration of each period when the residual disinfectant concentration in water entering the distribution system fell below 0.2 mg/l and when the State was notified of the occurrence.

(iii) The daily residual disinfectant concentration(s) (in mg/l) and disinfectant contact time(s) (in minutes) used for calculating the CT value(s).

(iv) If chlorine is used, the daily measurement(s) of pH of disinfected water following each point of chlorine disinfection.

(v) The daily measurement(s) of water temperature in °C following each point of disinfection.

(vi) The daily CTcalc and CTcalc/$CT_{99.9}$ values for each disinfectant measurement or sequence and the sum of all CTcalc/$CT_{99.9}$ values ((CTcalc/$CT_{99.9}$)) before or at the first customer.

(vii) The daily determination of whether disinfection achieves adequate *Giardia* cyst and virus inactivation, *i.e.*, whether (CTcalc/$CT_{99.9}$) is at least 1.0 or, where disinfectants other than chlorine are used, other indicator conditions that the State determines are appropriate, are met.

(viii) The following information on the samples taken in the distribution system in conjunction with total coliform monitoring pursuant to §141.72:

(A) Number of instances where the residual disinfectant concentration is measured;

(B) Number of instances where the residual disinfectant concentration is not measured but heterotrophic bacteria plate count (HPC) is measured;

(C) Number of instances where the residual disinfectant concentration is measured but not detected and no HPC is measured;

(D) Number of instances where the residual disinfectant concentration is detected and where HPC is >500/ml;

(E) Number of instances where the residual disinfectant concentration is not measured and HPC is >500/ml;

(F) For the current and previous month the system served water to the public, the value of ''V'' in the following formula:

$$V = \frac{c + d + e}{a + b} \times 100$$

where:

a = the value in paragraph (a)(2)(viii)(A) of this section,

b = the value in paragraph (a)(2)(viii)(B) of this section,

c = the value in paragraph (a)(2)(viii)(C) of this section,

d = the value in paragraph (a)(2)(viii)(D) of this section, and

e = the value in paragraph (a)(2)(viii)(E) of this section.

(G) If the State determines, based on site-specific considerations, that a system has no means for having a sample transported and analyzed for HPC by a certified laboratory under the requisite time and temperature conditions specified by §141.74(a)(1) and that the system is providing adequate disinfection in the distribution system, the requirements of paragraph (a)(2)(viii) (A)–(F) of this section do not apply to that system.

(ix) A system need not report the data listed in paragraphs (a)(2) (i), and (iii)–(vi) of this section if all data listed in paragraphs (a)(2) (i)–(viii) of this section remain on file at the system, and the State determines that:

(A) The system has submitted to the State all the information required by paragraphs (a)(2) (i)–(viii) of this section for at least 12 months; and

(B) The State has determined that the system is not required to provide filtration treatment.

(3) No later than ten days after the end of each Federal fiscal year (September 30), each system must provide to the State a report which summarizes its compliance with all watershed control program requirements specified in §141.71(b)(2).

(4) No later than ten days after the end of each Federal fiscal year (September 30), each system must provide to the State a report on the on-site inspection conducted during that year pursuant to §141.71(b)(3), unless the on-site inspection was conducted by the State. If the inspection was conducted by the State, the State must provide a copy of its report to the public water system.

(5)(i) Each system, upon discovering that a waterborne disease outbreak potentially attributable to that water system has occurred, must report that occurrence to the State as soon as possible, but no later than by the end of the next business day.

(ii) If at any time the turbidity exceeds 5 NTU, the system must consult with the primacy agency as soon as practical, but no later than 24 hours after the exceedance is known, in accordance with the public notification requirements under §141.203(b)(3).

(iii) If at any time the residual falls below 0.2 mg/l in the water entering the distribution system, the system must notify the State as soon as possible, but no later than by the end of the next business day. The system also must notify the State by the end of the next business day whether or not the residual was restored to at least 0.2 mg/l within 4 hours.

(b) A public water system that uses a surface water source or a ground water source under the direct influence of surface water and provides filtration treatment must report monthly to the State the information specified in this paragraph (b) beginning June 29, 1993, or when filtration is installed, whichever is later.

(1) Turbidity measurements as required by §141.74(c)(1) must be reported within 10 days after the end of each month the system serves water to the public. Information that must be reported includes:

(i) The total number of filtered water turbidity measurements taken during the month.

(ii) The number and percentage of filtered water turbidity measurements taken during the month which are less than or equal to the turbidity limits specified in §141.73 for the filtration technology being used.

(iii) The date and value of any turbidity measurements taken during the month which exceed 5 NTU.

(2) Disinfection information specified in §141.74(c) must be reported to the State within 10 days after the end of each month the system serves water to the public. Information that must be reported includes:

(i) For each day, the lowest measurement of residual disinfectant concentration in mg/l in water entering the distribution system.

(ii) The date and duration of each period when the residual disinfectant concentration in water entering the distribution system fell below 0.2 mg/l and when the State was notified of the occurrence.

(iii) The following information on the samples taken in the distribution system in conjunction with total coliform monitoring pursuant to §141.72:

(A) Number of instances where the residual disinfectant concentration is measured;

(B) Number of instances where the residual disinfectant concentration is not measured but heterotrophic bacteria plate count (HPC) is measured;

(C) Number of instances where the residual disinfectant concentration is measured but not detected and no HPC is measured;

(D) Number of instances where no residual disinfectant concentration is detected and where HPC is >500/ml;

(E) Number of instances where the residual disinfectant concentration is not measured and HPC is >500/ml;

(F) For the current and previous month the system serves water to the public, the value of ''V'' in the following formula:

$$V = \frac{c + d + e}{a + b} \times 100$$

where:

a = the value in paragraph (b)(2)(iii)(A) of this section,

b = the value in paragraph (b)(2)(iii)(B) of this section,

c = the value in paragraph (b)(2)(iii)(C) of this section,

d = the value in paragraph (b)(2)(iii)(D) of this section, and

e = the value in paragraph (b)(2)(iii)(E) of this section.

(G) If the State determines, based on site-specific considerations, that a system has no means for having a sample transported and analyzed for HPC by a certified laboratory within the requisite time and temperature conditions specified by §141.74(a)(1) and that the system is providing adequate disinfection in the distribution system, the requirements of paragraph (b)(2)(iii) (A)–(F) of this section do not apply.

(iv) A system need not report the data listed in paragraph (b)(2)(i) of this section if all data listed in paragraphs (b)(2) (i)–(iii) of this section remain on file at the system and the State determines that the system has submitted all the information required by paragraphs (b)(2) (i)–(iii) of this section for at least 12 months.

(3)(i) Each system, upon discovering that a waterborne disease outbreak potentially attributable to that water system has occurred, must report that occurrence to the State as soon as possible, but no later than by the end of the next business day.

(ii) If at any time the turbidity exceeds 5 NTU, the system must consult with the primacy agency as soon as practical, but no later than 24 hours after the exceedance is known, in accordance with the public notification requirements under § 141.203(b)(3).

(iii) If at any time the residual falls below 0.2 mg/l in the water entering the distribution system, the system must notify the State as soon as possible, but no later than by the end of the next business day. The system also must notify the State by the end of the next business day whether or not the residual was restored to at least 0.2 mg/l within 4 hours.

[54 FR 27527, June 29, 1989, as amended at 65 FR 26022, May 4, 2000; 69 FR 38856, June 29, 2004]

§ 141.76 Recycle provisions.

(a) *Applicability*. All subpart H systems that employ conventional filtration or direct filtration treatment and that recycle spent filter backwash water, thickener supernatant, or liquids from dewatering processes must meet the requirements in paragraphs (b) through (d) of this section.

(b) *Reporting*. A system must notify the State in writing by Decemeber 8, 2003, if the system recycles spent filter backwash water, thickener supernatant, or liquids from dewatering processes. This notification must include, at a minimum, the information specified in paragraphs (b)(1) and (2) of this section.

(1) A plant schematic showing the origin of all flows which are recycled (including, but not limited to, spent filter backwash water, thickener supernatant, and liquids from dewatering processes), the hydraulic conveyance used to transport them, and the location where they are re-introduced back into the treatment plant.

(2) Typical recycle flow in gallons per minute (gpm), the highest observed plant flow experienced in the previous year (gpm), design flow for the treatment plant (gpm), and State-approved operating capacity for the plant where the State has made such determinations.

(c) *Treatment technique requirement*. Any system that recycles spent filter backwash water, thickener supernatant, or liquids from dewatering processes must return these flows through the processes of a system's existing conventional or direct filtration system as defined in § 141.2 or at an alternate location approved by the State by June 8, 2004. If capital improvements are required to modify the recycle location to meet this requirement, all capital improvements must be completed no later than June 8, 2006.

(d) *Recordkeeping*. The system must collect and retain on file recycle flow information specified in paragraphs (d)(1) through (6) of this section for review and evaluation by the State beginning June 8, 2004.

(1) Copy of the recycle notification and information submitted to the State under paragraph (b) of this section.

(2) List of all recycle flows and the frequency with which they are returned.

(3) Average and maximum backwash flow rate through the filters and the average and maximum duration of the filter backwash process in minutes.

(4) Typical filter run length and a written summary of how filter run length is determined.

(5) The type of treatment provided for the recycle flow.

(6) Data on the physical dimensions of the equalization and/or treatment units, typical and maximum hydraulic loading rates, type of treatment chemicals used and average dose and frequency of use, and frequency at which solids are removed, if applicable.

[66 FR 31103, June 8, 2001]

Subpart I—Control of Lead and Copper

SOURCE: 56 FR 26548, June 7, 1991, unless otherwise noted.

§ 141.80 General requirements.

(a) *Applicability and effective dates.* (1) The requirements of this subpart I constitute the national primary drinking water regulations for lead and copper. Unless otherwise indicated, each of the provisions of this subpart applies to community water systems and non-transient, non-community water systems (hereinafter referred to as ''water systems'' or ''systems'').

(2) [Reserved]

(b) *Scope.* These regulations establish a treatment technique that includes requirements for corrosion control treatment, source water treatment, lead service line replacement, and public education. These requirements are triggered, in some cases, by lead and copper action levels measured in samples collected at consumers' taps.

(c) *Lead and copper action levels.* (1) The lead action level is exceeded if the concentration of lead in more than 10 percent of tap water samples collected during any monitoring period conducted in accordance with § 141.86 is greater than 0.015 mg/L (*i.e.*, if the ''90th percentile'' lead level is greater than 0.015 mg/L).

(2) The copper action level is exceeded if the concentration of copper in more than 10 percent of tap water samples collected during any monitoring period conducted in accordance with § 141.86 is greater than 1.3 mg/L (*i.e.*, if the ''90th percentile'' copper level is greater than 1.3 mg/L).

(3) The 90th percentile lead and copper levels shall be computed as follows:

(i) The results of all lead or copper samples taken during a monitoring period shall be placed in ascending order from the sample with the lowest concentration to the sample with the highest concentration. Each sampling result shall be assigned a number, ascending by single integers beginning with the number 1 for the sample with the lowest contaminant level. The number assigned to the sample with the highest contaminant level shall be equal to the total number of samples taken.

(ii) The number of samples taken during the monitoring period shall be multiplied by 0.9.

(iii) The contaminant concentration in the numbered sample yielded by the calculation in paragraph (c)(3)(ii) is the 90th percentile contaminant level.

(iv) For water systems serving fewer than 100 people that collect 5 samples per monitoring period, the 90th percentile is computed by taking the average of the highest and second highest concentrations.

(v) For a public water system that has been allowed by the State to collect fewer than five samples in accordance with § 141.86(c), the sample result with the highest concentration is considered the 90th percentile value.

(d) *Corrosion control treatment requirements.* (1) All water systems shall install and operate optimal corrosion control treatment as defined in § 141.2.

(2) Any water system that complies with the applicable corrosion control treatment requirements specified by the State under §§ 141.81 and 141.82 shall be deemed in compliance with the treatment requirement contained in paragraph (d)(1) of this section.

(e) *Source water treatment requirements.* Any system exceeding the lead or copper action level shall implement all applicable source water treatment requirements specified by the State under § 141.83.

(f) *Lead service line replacement requirements.* Any system exceeding the lead action level after implementation of applicable corrosion control and source water treatment requirements shall complete the lead service line replacement requirements contained in § 141.84.

(g) *Public education requirements.* Pursuant to § 141.85, all water systems must provide a consumer notice of lead tap water monitoring results to persons served at the sites (taps) that are tested. Any system exceeding the lead action level shall implement the public education requirements.

(h) *Monitoring and analytical requirements.* Tap water monitoring for lead

and copper, monitoring for water quality parameters, source water monitoring for lead and copper, and analyses of the monitoring results under this subpart shall be completed in compliance with §§141.86, 141.87, 141.88, and 141.89.

(i) *Reporting requirements.* Systems shall report to the State any information required by the treatment provisions of this subpart and §141.90.

(j) *Recordkeeping requirements.* Systems shall maintain records in accordance with §141.91.

(k) *Violation of national primary drinking water regulations.* Failure to comply with the applicable requirements of §§141.80–141.91, including requirements established by the State pursuant to these provisions, shall constitute a violation of the national primary drinking water regulations for lead and/or copper.

[56 FR 26548, June 7, 1991; 57 FR 28788, June 29, 1992, as amended at 72 FR 57814, Oct. 10, 2007]

§141.81 Applicability of corrosion control treatment steps to small, medium-size and large water systems.

(a) Systems shall complete the applicable corrosion control treatment requirements described in §141.82 by the deadlines established in this section.

(1) A large system (serving >50,000 persons) shall complete the corrosion control treatment steps specified in paragraph (d) of this section, unless it is deemed to have optimized corrosion control under paragraph (b)(2) or (b)(3) of this section.

(2) A small system (serving ≤3300 persons) and a medium-size system (serving >3,300 and ≤50,000 persons) shall complete the corrosion control treatment steps specified in paragraph (e) of this section, unless it is deemed to have optimized corrosion control under paragraph (b)(1), (b)(2), or (b)(3) of this section.

(b) A system is deemed to have optimized corrosion control and is not required to complete the applicable corrosion control treatment steps identified in this section if the system satisfies one of the criteria specified in paragraphs (b)(1) through (b)(3) of this section. Any such system deemed to have optimized corrosion control under this paragraph, and which has treatment in place, shall continue to operate and maintain optimal corrosion control treatment and meet any requirements that the State determines appropriate to ensure optimal corrosion control treatment is maintained.

(1) A small or medium-size water system is deemed to have optimized corrosion control if the system meets the lead and copper action levels during each of two consecutive six-month monitoring periods conducted in accordance with §141.86.

(2) Any water system may be deemed by the State to have optimized corrosion control treatment if the system demonstrates to the satisfaction of the State that it has conducted activities equivalent to the corrosion control steps applicable to such system under this section. If the State makes this determination, it shall provide the system with written notice explaining the basis for its decision and shall specify the water quality control parameters representing optimal corrosion control in accordance with §141.82(f). Water systems deemed to have optimized corrosion control under this paragraph shall operate in compliance with the State-designated optimal water quality control parameters in accordance with §141.82(g) and continue to conduct lead and copper tap and water quality parameter sampling in accordance with §141.86(d)(3) and §141.87(d), respectively. A system shall provide the State with the following information in order to support a determination under this paragraph:

(i) The results of all test samples collected for each of the water quality parameters in §141.82(c)(3).

(ii) A report explaining the test methods used by the water system to evaluate the corrosion control treatments listed in §141.82(c)(1), the results of all tests conducted, and the basis for the system's selection of optimal corrosion control treatment;

(iii) A report explaining how corrosion control has been installed and how it is being maintained to insure minimal lead and copper concentrations at consumers' taps; and

(iv) The results of tap water samples collected in accordance with §141.86 at least once every six months for one

year after corrosion control has been installed.

(3) Any water system is deemed to have optimized corrosion control if it submits results of tap water monitoring conducted in accordance with § 141.86 and source water monitoring conducted in accordance with § 141.88 that demonstrates for two consecutive 6-month monitoring periods that the difference between the 90th percentile tap water lead level computed under § 141.80(c)(3), and the highest source water lead concentration is less than the Practical Quantitation Level for lead specified in § 141.89(a)(1)(ii).

(i) Those systems whose highest source water lead level is below the Method Detection Limit may also be deemed to have optimized corrosion control under this paragraph if the 90th percentile tap water lead level is less than or equal to the Practical Quantitation Level for lead for two consecutive 6-month monitoring periods.

(ii) Any water system deemed to have optimized corrosion control in accordance with this paragraph shall continue monitoring for lead and copper at the tap no less frequently than once every three calendar years using the reduced number of sites specified in § 141.86(c) and collecting the samples at times and locations specified in § 141.86(d)(4)(iv). Any such system that has not conducted a round of monitoring pursuant to § 141.86(d) since September 30, 1997, shall complete a round of monitoring pursuant to this paragraph no later than September 30, 2000.

(iii) Any water system deemed to have optimized corrosion control pursuant to this paragraph shall notify the State in writing pursuant to § 141.90(a)(3) of any upcoming long-term change in treatment or addition of a new source as described in that section. The State must review and approve the addition of a new source or long-term change in water treatment before it is implemented by the water system. The State may require any such system to conduct additional monitoring or to take other action the State deems appropriate to ensure that such systems maintain minimal levels of corrosion in the distribution system.

(iv) As of July 12, 2001, a system is not deemed to have optimized corrosion control under this paragraph, and shall implement corrosion control treatment pursuant to paragraph (b)(3)(v) of this section unless it meets the copper action level.

(v) Any system triggered into corrosion control because it is no longer deemed to have optimized corrosion control under this paragraph shall implement corrosion control treatment in accordance with the deadlines in paragraph (e) of this section. Any such large system shall adhere to the schedule specified in that paragraph for medium-size systems, with the time periods for completing each step being triggered by the date the system is no longer deemed to have optimized corrosion control under this paragraph.

(c) Any small or medium-size water system that is required to complete the corrosion control steps due to its exceedance of the lead or copper action level may cease completing the treatment steps whenever the system meets both action levels during each of two consecutive monitoring periods conducted pursuant to § 141.86 and submits the results to the State. If any such water system thereafter exceeds the lead or copper action level during any monitoring period, the system (or the State, as the case may be) shall recommence completion of the applicable treatment steps, beginning with the first treatment step which was not previously completed in its entirety. The State may require a system to repeat treatment steps previously completed by the system where the State determines that this is necessary to implement properly the treatment requirements of this section. The State shall notify the system in writing of such a determination and explain the basis for its decision. The requirement for any small- or medium-size system to implement corrosion control treatment steps in accordance with paragraph (e) of this section (including systems deemed to have optimized corrosion control under paragraph (b)(1) of this section) is triggered whenever any small- or medium-size system exceeds the lead or copper action level.

(d) *Treatment steps and deadlines for large systems.* Except as provided in paragraph (b) (2) and (3) of this section,

large systems shall complete the following corrosion control treatment steps (described in the referenced portions of §§141.82, 141.86, and 141.87) by the indicated dates.

(1) *Step 1:* The system shall conduct initial monitoring (§141.86(d)(1) and §141.87(b)) during two consecutive six-month monitoring periods by January 1, 1993.

(2) *Step 2:* The system shall complete corrosion control studies (§141.82(c)) by July 1, 1994.

(3) *Step 3:* The State shall designate optimal corrosion control treatment (§141.82(d)) by January 1, 1995.

(4) *Step 4:* The system shall install optimal corrosion control treatment (§141.82(e)) by January 1, 1997.

(5) *Step 5:* The system shall complete follow-up sampling (§141.86(d)(2) and §141.87(c)) by January 1, 1998.

(6) *Step 6:* The State shall review installation of treatment and designate optimal water quality control parameters (§141.82(f)) by July 1, 1998.

(7) *Step 7:* The system shall operate in compliance with the State-specified optimal water quality control parameters (§141.82(g)) and continue to conduct tap sampling (§141.86(d)(3) and §141.87(d)).

(e) *Treatment Steps and deadlines for small and medium-size systems.* Except as provided in paragraph (b) of this section, small and medium-size systems shall complete the following corrosion control treatment steps (described in the referenced portions of §§141.82, 141.86 and 141.87) by the indicated time periods.

(1) *Step 1:* The system shall conduct initial tap sampling (§141.86(d)(1) and §141.87(b)) until the system either exceeds the lead or copper action level or becomes eligible for reduced monitoring under §141.86(d)(4). A system exceeding the lead or copper action level shall recommend optimal corrosion control treatment (§141.82(a)) within six months after the end of the monitoring period during which it exceeds one of the action levels.

(2) *Step 2:* Within 12 months after the end of the monitoring period during which a system exceeds the lead or copper action level, the State may require the system to perform corrosion control studies (§141.82(b)). If the State does not require the system to perform such studies, the State shall specify optimal corrosion control treatment (§141.82(d)) within the following timeframes:

(i) For medium-size systems, within 18 months after the end of the monitoring period during which such system exceeds the lead or copper action level.

(ii) For small systems, within 24 months after the end of the monitoring period during which such system exceeds the lead or copper action level.

(3) *Step 3:* If the State requires a system to perform corrosion control studies under step 2, the system shall complete the studies (§141.82(c)) within 18 months after the State requires that such studies be conducted.

(4) *Step 4:* If the system has performed corrosion control studies under step 2, the State shall designate optimal corrosion control treatment (§141.82(d)) within 6 months after completion of step 3.

(5) *Step 5:* The system shall install optimal corrosion control treatment (§141.82(e)) within 24 months after the State designates such treatment.

(6) *Step 6:* The system shall complete follow-up sampling (§141.86(d)(2) and §141.87(c)) within 36 months after the State designates optimal corrosion control treatment.

(7) *Step 7:* The State shall review the system's installation of treatment and designate optimal water quality control parameters (§141.82(f)) within 6 months after completion of step 6.

(8) *Step 8:* The system shall operate in compliance with the State-designated optimal water quality control parameters (§141.82(g)) and continue to conduct tap sampling (§141.86(d)(3) and §141.87(d)).

[56 FR 26548, June 7, 1991, as amended at 59 FR 33862, June 30, 1994; 65 FR 2004, Jan. 12, 2000; 72 FR 57814, Oct. 10, 2007]

§141.82 Description of corrosion control treatment requirements.

Each system shall complete the corrosion control treatment requirements described below which are applicable to such system under §141.81.

(a) *System recommendation regarding corrosion control treatment.* Based upon the results of lead and copper tap monitoring and water quality parameter monitoring, small and medium-size

water systems exceeding the lead or copper action level shall recommend installation of one or more of the corrosion control treatments listed in paragraph (c)(1) of this section which the system believes constitutes optimal corrosion control for that system. The State may require the system to conduct additional water quality parameter monitoring in accordance with §141.87(b) to assist the State in reviewing the system's recommendation.

(b) *State decision to require studies of corrosion control treatment (applicable to small and medium-size systems).* The State may require any small or medium-size system that exceeds the lead or copper action level to perform corrosion control studies under paragraph (c) of this section to identify optimal corrosion control treatment for the system.

(c) *Performance of corrosion control studies.* (1) Any public water system performing corrosion control studies shall evaluate the effectiveness of each of the following treatments, and, if appropriate, combinations of the following treatments to identify the optimal corrosion control treatment for that system:

(i) Alkalinity and pH adjustment;

(ii) Calcium hardness adjustment; and

(iii) The addition of a phosphate or silicate based corrosion inhibitor at a concentration sufficient to maintain an effective residual concentration in all test tap samples.

(2) The water system shall evaluate each of the corrosion control treatments using either pipe rig/loop tests, metal coupon tests, partial-system tests, or analyses based on documented analogous treatments with other systems of similar size, water chemistry and distribution system configuration.

(3) The water system shall measure the following water quality parameters in any tests conducted under this paragraph before and after evaluating the corrosion control treatments listed above:

(i) Lead;

(ii) Copper;

(iii) pH;

(iv) Alkalinity;

(v) Calcium;

(vi) Conductivity;

(vii) Orthophosphate (when an inhibitor containing a phosphate compound is used);

(viii) Silicate (when an inhibitor containing a silicate compound is used);

(ix) Water temperature.

(4) The water system shall identify all chemical or physical constraints that limit or prohibit the use of a particular corrosion control treatment and document such constraints with at least one of the following:

(i) Data and documentation showing that a particular corrosion control treatment has adversely affected other water treatment processes when used by another water system with comparable water quality characteristics; and/or

(ii) Data and documentation demonstrating that the water system has previously attempted to evaluate a particular corrosion control treatment and has found that the treatment is ineffective or adversely affects other water quality treatment processes.

(5) The water system shall evaluate the effect of the chemicals used for corrosion control treatment on other water quality treatment processes.

(6) On the basis of an analysis of the data generated during each evaluation, the water system shall recommend to the State in writing the treatment option that the corrosion control studies indicate constitutes optimal corrosion control treatment for that system. The water system shall provide a rationale for its recommendation along with all supporting documentation specified in paragraphs (c) (1) through (5) of this section.

(d) *State designation of optimal corrosion control treatment.* (1) Based upon consideration of available information including, where applicable, studies performed under paragraph (c) of this section and a system's recommended treatment alternative, the State shall either approve the corrosion control treatment option recommended by the system, or designate alternative corrosion control treatment(s) from among those listed in paragraph (c)(1) of this section. When designating optimal treatment the State shall consider the

effects that additional corrosion control treatment will have on water quality parameters and on other water quality treatment processes.

(2) The State shall notify the system of its decision on optimal corrosion control treatment in writing and explain the basis for this determination. If the State requests additional information to aid its review, the water system shall provide the information.

(e) *Installation of optimal corrosion control.* Each system shall properly install and operate throughout its distribution system the optimal corrosion control treatment designated by the State under paragraph (d) of this section.

(f) *State review of treatment and specification of optimal water quality control parameters.* The State shall evaluate the results of all lead and copper tap samples and water quality parameter samples submitted by the water system and determine whether the system has properly installed and operated the optimal corrosion control treatment designated by the State in paragraph (d) of this section. Upon reviewing the results of tap water and water quality parameter monitoring by the system, both before and after the system installs optimal corrosion control treatment, the State shall designate:

(1) A minimum value or a range of values for pH measured at each entry point to the distribution system;

(2) A minimum pH value, measured in all tap samples. Such value shall be equal to or greater than 7.0, unless the State determines that meeting a pH level of 7.0 is not technologically feasible or is not necessary for the system to optimize corrosion control;

(3) If a corrosion inhibitor is used, a minimum concentration or a range of concentrations for the inhibitor, measured at each entry point to the distribution system and in all tap samples, that the State determines is necessary to form a passivating film on the interior walls of the pipes of the distribution system;

(4) If alkalinity is adjusted as part of optimal corrosion control treatment, a minimum concentration or a range of concentrations for alkalinity, measured at each entry point to the distribution system and in all tap samples;

(5) If calcium carbonate stabilization is used as part of corrosion control, a minimum concentration or a range of concentrations for calcium, measured in all tap samples.

The values for the applicable water quality control parameters listed above shall be those that the State determines to reflect optimal corrosion control treatment for the system. The State may designate values for additional water quality control parameters determined by the State to reflect optimal corrosion control for the system. The State shall notify the system in writing of these determinations and explain the basis for its decisions.

(g) *Continued operation and monitoring.* All systems optimizing corrosion control shall continue to operate and maintain optimal corrosion control treatment, including maintaining water quality parameters at or above minimum values or within ranges designated by the State under paragraph (f) of this section, in accordance with this paragraph for all samples collected under §141.87(d) through (f). Compliance with the requirements of this paragraph shall be determined every six months, as specified under §141.87(d). A water system is out of compliance with the requirements of this paragraph for a six-month period if it has excursions for any State-specified parameter on more than nine days during the period. An excursion occurs whenever the daily value for one or more of the water quality parameters measured at a sampling location is below the minimum value or outside the range designated by the State. Daily values are calculated as follows. States have discretion to delete results of obvious sampling errors from this calculation.

(1) On days when more than one measurement for the water quality parameter is collected at the sampling location, the daily value shall be the average of all results collected during the day regardless of whether they are collected through continuous monitoring, grab sampling, or a combination of both. If EPA has approved an alternative formula under §142.16 of this chapter in the State's application for a

program revision submitted pursuant to § 142.12 of this chapter, the State's formula shall be used to aggregate multiple measurements taken at a sampling point for the water quality parameter in lieu of the formula in this paragraph.

(2) On days when only one measurement for the water quality parameter is collected at the sampling location, the daily value shall be the result of that measurement.

(3) On days when no measurement is collected for the water quality parameter at the sampling location, the daily value shall be the daily value calculated on the most recent day on which the water quality parameter was measured at the sample site.

(h) *Modification of State treatment decisions.* Upon its own initiative or in response to a request by a water system or other interested party, a State may modify its determination of the optimal corrosion control treatment under paragraph (d) of this section or optimal water quality control parameters under paragraph (f) of this section. A request for modification by a system or other interested party shall be in writing, explain why the modification is appropriate, and provide supporting documentation. The State may modify its determination where it concludes that such change is necessary to ensure that the system continues to optimize corrosion control treatment. A revised determination shall be made in writing, set forth the new treatment requirements, explain the basis for the State's decision, and provide an implementation schedule for completing the treatment modifications.

(i) *Treatment decisions by EPA in lieu of the State.* Pursuant to the procedures in § 142.19, the EPA Regional Administrator may review treatment determinations made by a State under paragraphs (d), (f), or (h) of this section and issue federal treatment determinations consistent with the requirements of those paragraphs where the Regional Administrator finds that:

(1) A State has failed to issue a treatment determination by the applicable deadlines contained in § 141.81,

(2) A State has abused its discretion in a substantial number of cases or in cases affecting a substantial population, or

(3) The technical aspects of a State's determination would be indefensible in an expected Federal enforcement action taken against a system.

[56 FR 26548, June 7, 1991, as amended at 65 FR 2004, Jan. 12, 2000]

§ 141.83 Source water treatment requirements.

Systems shall complete the applicable source water monitoring and treatment requirements (described in the referenced portions of paragraph (b) of this section, and in §§ 141.86, and 141.88) by the following deadlines.

(a) *Deadlines for completing source water treatment steps*—(1) *Step 1:* A system exceeding the lead or copper action level shall complete lead and copper source water monitoring (§ 141.88(b)) and make a treatment recommendation to the State (§ 141.83(b)(1)) no later than 180 days after the end of the monitoring period during which the lead or copper action level was exceeded.

(2) *Step 2:* The State shall make a determination regarding source water treatment (§ 141.83(b)(2)) within 6 months after submission of monitoring results under step 1.

(3) *Step 3:* If the State requires installation of source water treatment, the system shall install the treatment (§ 141.83(b)(3)) within 24 months after completion of step 2.

(4) *Step 4:* The system shall complete follow-up tap water monitoring (§ 141.86(d)(2) and source water monitoring (§ 141.88(c)) within 36 months after completion of step 2.

(5) *Step 5:* The State shall review the system's installation and operation of source water treatment and specify maximum permissible source water levels (§ 141.83(b)(4)) within 6 months after completion of step 4.

(6) *Step 6:* The system shall operate in compliance with the State-specified maximum permissible lead and copper source water levels (§ 141.83(b)(4)) and continue source water monitoring (§ 141.88(d)).

(b) *Description of source water treatment requirements*—(1) *System treatment recommendation.* Any system which exceeds the lead or copper action level

shall recommend in writing to the State the installation and operation of one of the source water treatments listed in paragraph (b)(2) of this section. A system may recommend that no treatment be installed based upon a demonstration that source water treatment is not necessary to minimize lead and copper levels at users' taps.

(2) *State determination regarding source water treatment.* The State shall complete an evaluation of the results of all source water samples submitted by the water system to determine whether source water treatment is necessary to minimize lead or copper levels in water delivered to users' taps. If the State determines that treatment is needed, the State shall either require installation and operation of the source water treatment recommended by the system (if any) or require the installation and operation of another source water treatment from among the following: Ion exchange, reverse osmosis, lime softening or coagulation/filtration. If the State requests additional information to aid in its review, the water system shall provide the information by the date specified by the State in its request. The State shall notify the system in writing of its determination and set forth the basis for its decision.

(3) *Installation of source water treatment.* Each system shall properly install and operate the source water treatment designated by the State under paragraph (b)(2) of this section.

(4) *State review of source water treatment and specification of maximum permissible source water levels.* The State shall review the source water samples taken by the water system both before and after the system installs source water treatment, and determine whether the system has properly installed and operated the source water treatment designated by the State. Based upon its review, the State shall designate the maximum permissible lead and copper concentrations for finished water entering the distribution system. Such levels shall reflect the contaminant removal capability of the treatment properly operated and maintained. The State shall notify the system in writing and explain the basis for its decision.

(5) *Continued operation and maintenance.* Each water system shall maintain lead and copper levels below the maximum permissible concentrations designated by the State at each sampling point monitored in accordance with § 141.88. The system is out of compliance with this paragraph if the level of lead or copper at any sampling point is greater than the maximum permissible concentration designated by the State.

(6) *Modification of State treatment decisions.* Upon its own initiative or in response to a request by a water system or other interested party, a State may modify its determination of the source water treatment under paragraph (b)(2) of this section, or maximum permissible lead and copper concentrations for finished water entering the distribution system under paragraph (b)(4) of this section. A request for modification by a system or other interested party shall be in writing, explain why the modification is appropriate, and provide supporting documentation. The State may modify its determination where it concludes that such change is necessary to ensure that the system continues to minimize lead and copper concentrations in source water. A revised determination shall be made in writing, set forth the new treatment requirements, explain the basis for the State's decision, and provide an implementation schedule for completing the treatment modifications.

(7) *Treatment decisions by EPA in lieu of the State.* Pursuant to the procedures in § 142.19, the EPA Regional Administrator may review treatment determinations made by a State under paragraphs (b) (2), (4), or (6) of this section and issue Federal treatment determinations consistent with the requirements of those paragraphs where the Administrator finds that:

(i) A State has failed to issue a treatment determination by the applicable deadlines contained in § 141.83(a),

(ii) A state has abused its discretion in a substantial number of cases or in cases affecting a substantial population, or

(iii) The technical aspects of a State's determination would be indefensible in an expected Federal enforcement action taken against a system.

[56 FR 26548, June 7, 1991, as amended at 72 FR 57815, Oct. 10, 2007]

§ 141.84 Lead service line replacement requirements.

(a) Systems that fail to meet the lead action level in tap samples taken pursuant to §141.86(d)(2), after installing corrosion control and/or source water treatment (whichever sampling occurs later), shall replace lead service lines in accordance with the requirements of this section. If a system is in violation of §141.81 or §141.83 for failure to install source water or corrosion control treatment, the State may require the system to commence lead service line replacement under this section after the date by which the system was required to conduct monitoring under §141.86(d)(2) has passed.

(b)(1) A water system shall replace annually at least 7 percent of the initial number of lead service lines in its distribution system. The initial number of lead service lines is the number of lead lines in place at the time the replacement program begins. The system shall identify the initial number of lead service lines in its distribution system, including an identification of the portion(s) owned by the system, based on a materials evaluation, including the evaluation required under §141.86(a) and relevant legal authorities (e.g., contracts, local ordinances) regarding the portion owned by the system. The first year of lead service line replacement shall begin on the first day following the end of the monitoring period in which the action level was exceeded under paragraph (a) of this section. If monitoring is required annually or less frequently, the end of the monitoring period is September 30 of the calendar year in which the sampling occurs. If the State has established an alternate monitoring period, then the end of the monitoring period will be the last day of that period.

(2) Any water system resuming a lead service line replacement program after the cessation of its lead service line replacement program as allowed by paragraph (f) of this section shall update its inventory of lead service lines to include those sites that were previously determined not to require replacement through the sampling provision under paragraph (c) of this section. The system will then divide the updated number of remaining lead service lines by the number of remaining years in the program to determine the number of lines that must be replaced per year (7 percent lead service line replacement is based on a 15-year replacement program, so, for example, systems resuming lead service line replacement after previously conducting two years of replacement would divide the updated inventory by 13). For those systems that have completed a 15-year lead service line replacement program, the State will determine a schedule for replacing or retesting lines that were previously tested out under the replacement program when the system re-exceeds the action level.

(c) A system is not required to replace an individual lead service line if the lead concentration in all service line samples from that line, taken pursuant to §141.86(b)(3), is less than or equal to 0.015 mg/L.

(d) A water system shall replace that portion of the lead service line that it owns. In cases where the system does not own the entire lead service line, the system shall notify the owner of the line, or the owner's authorized agent, that the system will replace the portion of the service line that it owns and shall offer to replace the owner's portion of the line. A system is not required to bear the cost of replacing the privately-owned portion of the line, nor is it required to replace the privately-owned portion where the owner chooses not to pay the cost of replacing the privately-owned portion of the line, or where replacing the privately-owned portion would be precluded by State, local or common law. A water system that does not replace the entire length of the service line also shall complete the following tasks.

(1) At least 45 days prior to commencing with the partial replacement of a lead service line, the water system shall provide notice to the resident(s) of all buildings served by the line explaining that they may experience a temporary increase of lead levels in

their drinking water, along with guidance on measures consumers can take to minimize their exposure to lead. The State may allow the water system to provide notice under the previous sentence less than 45 days prior to commencing partial lead service line replacement where such replacement is in conjunction with emergency repairs. In addition, the water system shall inform the resident(s) served by the line that the system will, at the system's expense, collect a sample from each partially-replaced lead service line that is representative of the water in the service line for analysis of lead content, as prescribed under §141.86(b)(3), within 72 hours after the completion of the partial replacement of the service line. The system shall collect the sample and report the results of the analysis to the owner and the resident(s) served by the line within three business days of receiving the results. Mailed notices post-marked within three business days of receiving the results shall be considered ''on time.''

(2) The water system shall provide the information required by paragraph (d)(1) of this section to the residents of individual dwellings by mail or by other methods approved by the State. In instances where multi-family dwellings are served by the line, the water system shall have the option to post the information at a conspicuous location.

(e) The State shall require a system to replace lead service lines on a shorter schedule than that required by this section, taking into account the number of lead service lines in the system, where such a shorter replacement schedule is feasible. The State shall make this determination in writing and notify the system of its finding within 6 months after the system is triggered into lead service line replacement based on monitoring referenced in paragraph (a) of this section.

(f) Any system may cease replacing lead service lines whenever first draw samples collected pursuant to §141.86(b)(2) meet the lead action level during each of two consecutive monitoring periods and the system submits the results to the State. If first draw tap samples collected in any such system thereafter exceeds the lead action level, the system shall recommence replacing lead service lines pursuant to paragraph (b)(2) of this section.

(g) To demonstrate compliance with paragraphs (a) through (d) of this section, a system shall report to the State the information specified in §141.90(e).

[56 FR 26548, June 7, 1991; 57 FR 28788, June 29, 1992, as amended at 65 FR 2005, Jan. 12, 2000; 72 FR 57815, Oct. 10, 2007]

§141.85 Public education and supplemental monitoring requirements.

All water systems must deliver a consumer notice of lead tap water monitoring results to persons served by the water system at sites that are tested, as specified in paragraph (d) of this section. A water system that exceeds the lead action level based on tap water samples collected in accordance with §141.86 shall deliver the public education materials contained in paragraph (a) of this section in accordance with the requirements in paragraph (b) of this section. Water systems that exceed the lead action level must sample the tap water of any customer who requests it in accordance with paragraph (c) of this section.

(a) *Content of written public education materials*—(1) *Community water systems and non-transient non-community water systems.* Water systems must include the following elements in printed materials (e.g., brochures and pamphlets) in the same order as listed below. In addition, language in paragraphs (a)(1)(i) through (ii) and (a)(1)(vi) of this section must be included in the materials, exactly as written, except for the text in brackets in these paragraphs for which the water system must include system-specific information. Any additional information presented by a water system must be consistent with the information below and be in plain language that can be understood by the general public. Water systems must submit all written public education materials to the State prior to delivery. The State may require the system to obtain approval of the content of written public materials prior to delivery.

(i) IMPORTANT INFORMATION ABOUT LEAD IN YOUR DRINKING WATER. [INSERT NAME OF WATER

SYSTEM] found elevated levels of lead in drinking water in some homes/buildings. Lead can cause serious health problems, especially for pregnant women and young children. Please read this information closely to see what you can do to reduce lead in your drinking water.

(ii) *Health effects of lead.* Lead can cause serious health problems if too much enters your body from drinking water or other sources. It can cause damage to the brain and kidneys, and can interfere with the production of red blood cells that carry oxygen to all parts of your body. The greatest risk of lead exposure is to infants, young children, and pregnant women. Scientists have linked the effects of lead on the brain with lowered IQ in children. Adults with kidney problems and high blood pressure can be affected by low levels of lead more than healthy adults. Lead is stored in the bones, and it can be released later in life. During pregnancy, the child receives lead from the mother's bones, which may affect brain development.

(iii) *Sources of lead.* (A) Explain what lead is.

(B) Explain possible sources of lead in drinking water and how lead enters drinking water. Include information on home/building plumbing materials and service lines that may contain lead.

(C) Discuss other important sources of lead exposure in addition to drinking water (e.g., paint).

(iv) Discuss the steps the consumer can take to reduce their exposure to lead in drinking water.

(A) Encourage running the water to flush out the lead.

(B) Explain concerns with using hot water from the tap and specifically caution against the use of hot water for preparing baby formula.

(C) Explain that boiling water does not reduce lead levels.

(D) Discuss other options consumers can take to reduce exposure to lead in drinking water, such as alternative sources or treatment of water.

(E) Suggest that parents have their child's blood tested for lead.

(v) Explain why there are elevated levels of lead in the system's drinking water (if known) and what the water system is doing to reduce the lead levels in homes/buildings in this area.

(vi) For more information, call us at [INSERT YOUR NUMBER] [(IF APPLICABLE), or visit our Web site at [INSERT YOUR WEB SITE HERE]]. For more information on reducing lead exposure around your home/building and the health effects of lead, visit EPA's Web site at *http://www.epa.gov/lead* or contact your health care provider.

(2) *Community water systems.* In addition to including the elements specified in paragraph (a)(1) of this section, community water systems must:

(i) Tell consumers how to get their water tested.

(ii) Discuss lead in plumbing components and the difference between low lead and lead free.

(b) *Delivery of public education materials.* (1) For public water systems serving a large proportion of non-English speaking consumers, as determined by the State, the public education materials must contain information in the appropriate language(s) regarding the importance of the notice or contain a telephone number or address where persons served may contact the water system to obtain a translated copy of the public education materials or to request assistance in the appropriate language.

(2) A community water system that exceeds the lead action level on the basis of tap water samples collected in accordance with § 141.86, and that is not already conducting public education tasks under this section, must conduct the public education tasks under this section within 60 days after the end of the monitoring period in which the exceedance occurred:

(i) Deliver printed materials meeting the content requirements of paragraph (a) of this section to all bill paying customers.

(ii)(A) Contact customers who are most at risk by delivering education materials that meet the content requirements of paragraph (a) of this section to local public health agencies even if they are not located within the water system's service area, along with an informational notice that encourages distribution to all the organization's potentially affected customers or community water system's users.

The water system must contact the local public health agencies directly by phone or in person. The local public health agencies may provide a specific list of additional community based organizations serving target populations, which may include organizations outside the service area of the water system. If such lists are provided, systems must deliver education materials that meet the content requirements of paragraph (a) of this section to all organizations on the provided lists.

(B) Contact customers who are most at risk by delivering materials that meet the content requirements of paragraph (a) of this section to the following organizations listed in 1 through 6 that are located within the water system's service area, along with an informational notice that encourages distribution to all the organization's potentially affected customers or community water system's users:

(*1*) Public and private schools or school boards.

(*2*) Women, Infants and Children (WIC) and Head Start programs.

(*3*) Public and private hospitals and medical clinics.

(*4*) Pediatricians.

(*5*) Family planning clinics.

(*6*) Local welfare agencies.

(C) Make a good faith effort to locate the following organizations within the service area and deliver materials that meet the content requirements of paragraph (a) of this section to them, along with an informational notice that encourages distribution to all potentially affected customers or users. The good faith effort to contact at-risk customers may include requesting a specific contact list of these organizations from the local public health agencies, even if the agencies are not located within the water system's service area:

(*1*) Licensed childcare centers

(*2*) Public and private preschools.

(*3*) Obstetricians-Gynecologists and Midwives.

(iii) No less often than quarterly, provide information on or in each water bill as long as the system exceeds the action level for lead. The message on the water bill must include the following statement exactly as written except for the text in brackets for which the water system must include system-specific information: [INSERT NAME OF WATER SYSTEM] found high levels of lead in drinking water in some homes. Lead can cause serious health problems. For more information please call [INSERT NAME OF WATER SYSTEM] [or visit (INSERT YOUR WEB SITE HERE)]. The message or delivery mechanism can be modified in consultation with the State; specifically, the State may allow a separate mailing of public education materials to customers if the water system cannot place the information on water bills.

(iv) Post material meeting the content requirements of paragraph (a) of this section on the water system's Web site if the system serves a population greater than 100,000.

(v) Submit a press release to newspaper, television and radio stations.

(vi) In addition to paragraphs (b)(2)(i) through (v) of this section, systems must implement at least three activities from one or more categories listed below. The educational content and selection of these activities must be determined in consultation with the State.

(A) Public Service Announcements.

(B) Paid advertisements.

(C) Public Area Information Displays.

(D) E-mails to customers.

(E) Public Meetings.

(F) Household Deliveries.

(G) Targeted Individual Customer Contact.

(H) Direct material distribution to all multi-family homes and institutions.

(I) Other methods approved by the State.

(vii) For systems that are required to conduct monitoring annually or less frequently, the end of the monitoring period is September 30 of the calendar year in which the sampling occurs, or, if the State has established an alternate monitoring period, the last day of that period.

(3) As long as a community water system exceeds the action level, it must repeat the activities pursuant to paragraph (b)(2) of this section as described in paragraphs (b)(3)(i) through (iv) of this section.

(i) A community water system shall repeat the tasks contained in paragraphs (b)(2)(i), (ii) and (vi) of this section every 12 months.

(ii) A community water system shall repeat tasks contained in paragraph (b)(2)(iii) of this section with each billing cycle.

(iii) A community water system serving a population greater than 100,000 shall post and retain material on a publicly accessible Web site pursuant to paragraph (b)(2)(iv) of this section.

(iv) The community water system shall repeat the task in paragraph (b)(2)(v) of this section twice every 12 months on a schedule agreed upon with the State. The State can allow activities in paragraph (b)(2) of this section to extend beyond the 60-day requirement if needed for implementation purposes on a case-by-case basis; however, this extension must be approved in writing by the State in advance of the 60-day deadline.

(4) Within 60 days after the end of the monitoring period in which the exceedance occurred (unless it already is repeating public education tasks pursuant to paragraph (b)(5) of this section), a non-transient non-community water system shall deliver the public education materials specified by paragraph (a) of this section as follows:

(i) Post informational posters on lead in drinking water in a public place or common area in each of the buildings served by the system; and

(ii) Distribute informational pamphlets and/or brochures on lead in drinking water to each person served by the non-transient non-community water system. The State may allow the system to utilize electronic transmission in lieu of or combined with printed materials as long as it achieves at least the same coverage.

(iii) For systems that are required to conduct monitoring annually or less frequently, the end of the monitoring period is September 30 of the calendar year in which the sampling occurs, or, if the State has established an alternate monitoring period, the last day of that period.

(5) A non-transient non-community water system shall repeat the tasks contained in paragraph (b)(4) of this section at least once during each calendar year in which the system exceeds the lead action level. The State can allow activities in (b)(4) of this section to extend beyond the 60-day requirement if needed for implementation purposes on a case-by-case basis; however, this extension must be approved in writing by the State in advance of the 60-day deadline.

(6) A water system may discontinue delivery of public education materials if the system has met the lead action level during the most recent six-month monitoring period conducted pursuant to §141.86. Such a system shall recommence public education in accordance with this section if it subsequently exceeds the lead action level during any monitoring period.

(7) A community water system may apply to the State, in writing (unless the State has waived the requirement for prior State approval), to use only the text specified in paragraph (a)(1) of this section in lieu of the text in paragraphs (a)(1) and (a)(2) of this section and to perform the tasks listed in paragraphs (b)(4) and (b)(5) of this section in lieu of the tasks in paragraphs (b)(2) and (b)(3) of this section if:

(i) The system is a facility, such as a prison or a hospital, where the population served is not capable of or is prevented from making improvements to plumbing or installing point of use treatment devices; and

(ii) The system provides water as part of the cost of services provided and does not separately charge for water consumption.

(8) A community water system serving 3,300 or fewer people may limit certain aspects of their public education programs as follows:

(i) With respect to the requirements of paragraph (b)(2)(vi) of this section, a system serving 3,300 or fewer must implement at least one of the activities listed in that paragraph.

(ii) With respect to the requirements of paragraph (b)(2)(ii) of this section, a system serving 3,300 or fewer people may limit the distribution of the public education materials required under that paragraph to facilities and organizations served by the system that are most likely to be visited regularly by pregnant women and children.

(iii) With respect to the requirements of paragraph (b)(2)(v) of this section, the State may waive this requirement for systems serving 3,300 or fewer persons as long as system distributes notices to every household served by the system.

(c) *Supplemental monitoring and notification of results.* A water system that fails to meet the lead action level on the basis of tap samples collected in accordance with § 141.86 shall offer to sample the tap water of any customer who requests it. The system is not required to pay for collecting or analyzing the sample, nor is the system required to collect and analyze the sample itself.

(d) *Notification of results*—(1) *Reporting requirement.* All water systems must provide a notice of the individual tap results from lead tap water monitoring carried out under the requirements of § 141.86 to the persons served by the water system at the specific sampling site from which the sample was taken (e.g., the occupants of the residence where the tap was tested).

(2) *Timing of notification.* A water system must provide the consumer notice as soon as practical, but no later than 30 days after the system learns of the tap monitoring results.

(3) *Content.* The consumer notice must include the results of lead tap water monitoring for the tap that was tested, an explanation of the health effects of lead, list steps consumers can take to reduce exposure to lead in drinking water and contact information for the water utility. The notice must also provide the maximum contaminant level goal and the action level for lead and the definitions for these two terms from § 141.153(c).

(4) *Delivery.* The consumer notice must be provided to persons served at the tap that was tested, either by mail or by another method approved by the State. For example, upon approval by the State, a non-transient non-community water system could post the results on a bulletin board in the facility to allow users to review the information. The system must provide the notice to customers at sample taps tested, including consumers who do not receive water bills.

[72 FR 57815, Oct. 10, 2007]

§ 141.86 Monitoring requirements for lead and copper in tap water.

(a) *Sample site location.* (1) By the applicable date for commencement of monitoring under paragraph (d)(1) of this section, each water system shall complete a materials evaluation of its distribution system in order to identify a pool of targeted sampling sites that meets the requirements of this section, and which is sufficiently large to ensure that the water system can collect the number of lead and copper tap samples required in paragraph (c) of this section. All sites from which first draw samples are collected shall be selected from this pool of targeted sampling sites. Sampling sites may not include faucets that have point-of-use or point-of-entry treatment devices designed to remove inorganic contaminants.

(2) A water system shall use the information on lead, copper, and galvanized steel that it is required to collect under § 141.42(d) of this part [special monitoring for corrosivity characteristics] when conducting a materials evaluation. When an evaluation of the information collected pursuant to § 141.42(d) is insufficient to locate the requisite number of lead and copper sampling sites that meet the targeting criteria in paragraph (a) of this section, the water system shall review the sources of information listed below in order to identify a sufficient number of sampling sites. In addition, the system shall seek to collect such information where possible in the course of its normal operations (e.g., checking service line materials when reading water meters or performing maintenance activities):

(i) All plumbing codes, permits, and records in the files of the building department(s) which indicate the plumbing materials that are installed within publicly and privately owned structures connected to the distribution system;

(ii) All inspections and records of the distribution system that indicate the material composition of the service connections that connect a structure to the distribution system; and

(iii) All existing water quality information, which includes the results of

all prior analyses of the system or individual structures connected to the system, indicating locations that may be particularly susceptible to high lead or copper concentrations.

(3) The sampling sites selected for a community water system's sampling pool (''tier l sampling sites'') shall consist of single family structures that:

(i) Contain copper pipes with lead solder installed after 1982 or contain lead pipes; and/or

(ii) Are served by a lead service line. When multiple-family residences comprise at least 20 percent of the structures served by a water system, the system may include these types of structures in its sampling pool.

(4) Any community water system with insufficient tier 1 sampling sites shall complete its sampling pool with ''tier 2 sampling sites'', consisting of buildings, including multiple-family residences that:

(i) Contain copper pipes with lead solder installed after 1982 or contain lead pipes; and/or

(ii) Are served by a lead service line.

(5) Any community water system with insufficient tier 1 and tier 2 sampling sites shall complete its sampling pool with ''tier 3 sampling sites'', consisting of single family structures that contain copper pipes with lead solder installed before 1983. A community water system with insufficient tier 1, tier 2, and tier 3 sampling sites shall complete its sampling pool with representative sites throughout the distribution system. For the purpose of this paragraph, a representative site is a site in which the plumbing materials used at that site would be commonly found at other sites served by the water system.

(6) The sampling sites selected for a non-transient noncommunity water system (''tier l sampling sites'') shall consist of buildings that:

(i) Contain copper pipes with lead solder installed after 1982 or contain lead pipes; and/or

(ii) Are served by a lead service line.

(7) A non-transient non-community water system with insufficient tier 1 sites that meet the targeting criteria in paragraph (a)(6) of this section shall complete its sampling pool with sampling sites that contain copper pipes with lead solder installed before 1983. If additional sites are needed to complete the sampling pool, the non-transient non-community water system shall use representative sites throughout the distribution system. For the purpose of this paragraph, a representative site is a site in which the plumbing materials used at that site would be commonly found at other sites served by the water system.

(8) Any water system whose distribution system contains lead service lines shall draw 50 percent of the samples it collects during each monitoring period from sites that contain lead pipes, or copper pipes with lead solder, and 50 percent of the samples from sites served by a lead service line. A water system that cannot identify a sufficient number of sampling sites served by a lead service line shall collect first-draw samples from all of the sites identified as being served by such lines.

(b) *Sample collection methods.* (1) All tap samples for lead and copper collected in accordance with this subpart, with the exception of lead service line samples collected under §141.84(c) and samples collected under paragraph (b)(5) of this section, shall be first-draw samples.

(2) Each first-draw tap sample for lead and copper shall be one liter in volume and have stood motionless in the plumbing system of each sampling site for at least six hours. First-draw samples from residential housing shall be collected from the cold water kitchen tap or bathroom sink tap. First-draw samples from a nonresidential building shall be one liter in volume and shall be collected at an interior tap from which water is typically drawn for consumption. Non-first-draw samples collected in lieu of first-draw samples pursuant to paragraph (b)(5) of this section shall be one liter in volume and shall be collected at an interior tap from which water is typically drawn for consumption. First-draw samples may be collected by the system or the system may allow residents to collect first-draw samples after instructing the residents of the sampling procedures specified in this paragraph. To avoid problems of residents handling nitric acid, acidification of first-draw samples may be done up to 14

days after the sample is collected. After acidification to resolubilize the metals, the sample must stand in the original container for the time specified in the approved EPA method before the sample can be analyzed. If a system allows residents to perform sampling, the system may not challenge, based on alleged errors in sample collection, the accuracy of sampling results.

(3) Each service line sample shall be one liter in volume and have stood motionless in the lead service line for at least six hours. Lead service line samples shall be collected in one of the following three ways:

(i) At the tap after flushing the volume of water between the tap and the lead service line. The volume of water shall be calculated based on the interior diameter and length of the pipe between the tap and the lead service line;

(ii) Tapping directly into the lead service line; or

(iii) If the sampling site is a building constructed as a single-family residence, allowing the water to run until there is a significant change in temperature which would be indicative of water that has been standing in the lead service line.

(4) A water system shall collect each first draw tap sample from the same sampling site from which it collected a previous sample. If, for any reason, the water system cannot gain entry to a sampling site in order to collect a follow-up tap sample, the system may collect the follow-up tap sample from another sampling site in its sampling pool as long as the new site meets the same targeting criteria, and is within reasonable proximity of the original site.

(5) A non-transient non-community water system, or a community water system that meets the criteria of § 141.85(b)(7), that does not have enough taps that can supply first-draw samples, as defined in § 141.2, may apply to the State in writing to substitute non-first-draw samples. Such systems must collect as many first-draw samples from appropriate taps as possible and identify sampling times and locations that would likely result in the longest standing time for the remaining sites. The State has the discretion to waive the requirement for prior State approval of non-first-draw sample sites selected by the system, either through State regulation or written notification to the system.

(c) *Number of samples*. Water systems shall collect at least one sample during each monitoring period specified in paragraph (d) of this section from the number of sites listed in the first column (''standard monitoring'') of the table in this paragraph. A system conducting reduced monitoring under paragraph (d)(4) of this section shall collect at least one sample from the number of sites specified in the second column (''reduced monitoring'') of the table in this paragraph during each monitoring period specified in paragraph (d)(4) of this section. Such reduced monitoring sites shall be representative of the sites required for standard monitoring. A public water system that has fewer than five drinking water taps, that can be used for human consumption meeting the sample site criteria of paragraph (a) of this section to reach the required number of sample sites listed in paragraph (c) of this section, must collect at least one sample from each tap and then must collect additional samples from those taps on different days during the monitoring period to meet the required number of sites. Alternatively the State may allow these public water systems to collect a number of samples less than the number of sites specified in paragraph (c) of this section, provided that 100 percent of all taps that can be used for human consumption are sampled. The State must approve this reduction of the minimum number of samples in writing based on a request from the system or onsite verification by the State. States may specify sampling locations when a system is conducting reduced monitoring. The table is as follows:

System size (number of people served)	Number of sites (standard monitoring)	Number of sites (reduced monitoring)
>100,000	100	50
10,001 to 100,000	60	30
3,301 to 10,000	40	20
501 to 3,300	20	10
101 to 500	10	5

System size (number of people served)	Number of sites (standard monitoring)	Number of sites (reduced monitoring)
≤100	5	5

(d) *Timing of monitoring*—(1) *Initial tap sampling*. The first six-month monitoring period for small, medium-size and large systems shall begin on the following dates:

System size (No. people served)	First six-month monitoring period begins on
>50,000	January 1, 1992.
3,301 to 50,000	July 1, 1992.
≤3,300	July 1, 1993.

(i) All large systems shall monitor during two consecutive six-month periods.

(ii) All small and medium-size systems shall monitor during each six-month monitoring period until:

(A) The system exceeds the lead or copper action level and is therefore required to implement the corrosion control treatment requirements under §141.81, in which case the system shall continue monitoring in accordance with paragraph (d)(2) of this section, or

(B) The system meets the lead and copper action levels during two consecutive six-month monitoring periods, in which case the system may reduce monitoring in accordance with paragraph (d)(4) of this section.

(2) *Monitoring after installation of corrosion control and source water treatment*. (i) Any large system which installs optimal corrosion control treatment pursuant to §141.81(d)(4) shall monitor during two consecutive six-month monitoring periods by the date specified in §141.81(d)(5).

(ii) Any small or medium-size system which installs optimal corrosion control treatment pursuant to §141.81(e)(5) shall monitor during two consecutive six-month monitoring periods by the date specified in §141.81(e)(6).

(iii) Any system which installs source water treatment pursuant to §141.83(a)(3) shall monitor during two consecutive six-month monitoring periods by the date specified in §141.83(a)(4).

(3) *Monitoring after State specifies water quality parameter values for optimal corrosion control*. After the State specifies the values for water quality control parameters under §141.82(f), the system shall monitor during each subsequent six-month monitoring period, with the first monitoring period to begin on the date the State specifies the optimal values under §141.82(f).

(4) *Reduced monitoring*. (i) A small or medium-size water system that meets the lead and copper action levels during each of two consecutive six-month monitoring periods may reduce the number of samples in accordance with paragraph (c) of this section, and reduce the frequency of sampling to once per year. A small or medium water system collecting fewer than five samples as specified in paragraph (c) of this section, that meets the lead and copper action levels during each of two consecutive six-month monitoring periods may reduce the frequency of sampling to once per year. In no case can the system reduce the number of samples required below the minimum of one sample per available tap. This sampling shall begin during the calendar year immediately following the end of the second consecutive six-month monitoring period.

(ii) Any water system that meets the lead action level and maintains the range of values for the water quality control parameters reflecting optimal corrosion control treatment specified by the State under §141.82(f) during each of two consecutive six-month monitoring periods may reduce the frequency of monitoring to once per year and reduce the number of lead and copper samples in accordance with paragraph (c) of this section if it receives written approval from the State. This sampling shall begin during the calendar year immediately following the end of the second consecutive six-month monitoring period. The State shall review monitoring, treatment, and other relevant information submitted by the water system in accordance with §141.90, and shall notify the system in writing when it determines the system is eligible to commence reduced monitoring pursuant to this paragraph. The State shall review, and where appropriate, revise its determination when the system submits new monitoring or treatment data, or when

other data relevant to the number and frequency of tap sampling becomes available.

(iii) A small or medium-size water system that meets the lead and copper action levels during three consecutive years of monitoring may reduce the frequency of monitoring for lead and copper from annually to once every three years. Any water system that meets the lead action level and maintains the range of values for the water quality control parameters reflecting optimal corrosion control treatment specified by the State under § 141.82(f) during three consecutive years of monitoring may reduce the frequency of monitoring from annually to once every three years if it receives written approval from the State. Samples collected once every three years shall be collected no later than every third calendar year. The State shall review monitoring, treatment, and other relevant information submitted by the water system in accordance with § 141.90, and shall notify the system in writing when it determines the system is eligible to reduce the frequency of monitoring to once every three years. The State shall review, and where appropriate, revise its determination when the system submits new monitoring or treatment data, or when other data relevant to the number and frequency of tap sampling becomes available.

(iv) A water system that reduces the number and frequency of sampling shall collect these samples from representative sites included in the pool of targeted sampling sites identified in paragraph (a) of this section. Systems sampling annually or less frequently shall conduct the lead and copper tap sampling during the months of June, July, August, or September unless the State has approved a different sampling period in accordance with paragraph (d)(4)(iv)(A) of this section.

(A) The State, at its discretion, may approve a different period for conducting the lead and copper tap sampling for systems collecting a reduced number of samples. Such a period shall be no longer than four consecutive months and must represent a time of normal operation where the highest levels of lead are most likely to occur. For a non-transient non-community water system that does not operate during the months of June through September, and for which the period of normal operation where the highest levels of lead are most likely to occur is not known, the State shall designate a period that represents a time of normal operation for the system. This sampling shall begin during the period approved or designated by the State in the calendar year immediately following the end of the second consecutive six-month monitoring period for systems initiating annual monitoring and during the three-year period following the end of the third consecutive calendar year of annual monitoring for systems initiating triennial monitoring.

(B) Systems monitoring annually, that have been collecting samples during the months of June through September and that receive State approval to alter their sample collection period under paragraph (d)(4)(iv)(A) of this section, must collect their next round of samples during a time period that ends no later than 21 months after the previous round of sampling. Systems monitoring triennially that have been collecting samples during the months of June through September, and receive State approval to alter the sampling collection period as per paragraph (d)(4)(iv)(A) of this section, must collect their next round of samples during a time period that ends no later than 45 months after the previous round of sampling. Subsequent rounds of sampling must be collected annually or triennially, as required by this section. Small systems with waivers, granted pursuant to paragraph (g) of this section, that have been collecting samples during the months of June through September and receive State approval to alter their sample collection period under paragraph (d)(4)(iv)(A) of this section must collect their next round of samples before the end of the 9-year period.

(v) Any water system that demonstrates for two consecutive 6-month monitoring periods that the tap water lead level computed under § 141.80(c)(3) is less than or equal to 0.005 mg/L and the tap water copper level computed under § 141.80(c)(3) is less than or equal

to 0.65 mg/L may reduce the number of samples in accordance with paragraph (c) of this section and reduce the frequency of sampling to once every three calendar years.

(vi)(A) A small or medium-size water system subject to reduced monitoring that exceeds the lead or copper action level shall resume sampling in accordance with paragraph (d)(3) of this section and collect the number of samples specified for standard monitoring under paragraph (c) of this section. Such a system shall also conduct water quality parameter monitoring in accordance with §141.87(b), (c) or (d) (as appropriate) during the monitoring period in which it exceeded the action level. Any such system may resume annual monitoring for lead and copper at the tap at the reduced number of sites specified in paragraph (c) of this section after it has completed two subsequent consecutive six-month rounds of monitoring that meet the criteria of paragraph (d)(4)(i) of this section and/or may resume triennial monitoring for lead and copper at the reduced number of sites after it demonstrates through subsequent rounds of monitoring that it meets the criteria of either paragraph (d)(4)(iii) or (d)(4)(v) of this section.

(B) Any water system subject to the reduced monitoring frequency that fails to meet the lead action level during any four-month monitoring period or that fails to operate at or above the minimum value or within the range of values for the water quality parameters specified by the State under §141.82(f) for more than nine days in any six-month period specified in §141.87(d) shall conduct tap water sampling for lead and copper at the frequency specified in paragraph (d)(3) of this section, collect the number of samples specified for standard monitoring under paragraph (c) of this section, and shall resume monitoring for water quality parameters within the distribution system in accordance with §141.87(d). This standard tap water sampling shall begin no later than the six-month period beginning January 1 of the calendar year following the lead action level exceedance or water quality parameter excursion. Such a system may resume reduced monitoring for lead and copper at the tap and for water quality parameters within the distribution system under the following conditions:

(*1*) The system may resume annual monitoring for lead and copper at the tap at the reduced number of sites specified in paragraph (c) of this section after it has completed two subsequent six-month rounds of monitoring that meet the criteria of paragraph (d)(4)(ii) of this section and the system has received written approval from the State that it is appropriate to resume reduced monitoring on an annual frequency. This sampling shall begin during the calendar year immediately following the end of the second consecutive six-month monitoring period.

(*2*) The system may resume triennial monitoring for lead and copper at the tap at the reduced number of sites after it demonstrates through subsequent rounds of monitoring that it meets the criteria of either paragraph (d)(4)(iii) or (d)(4)(v) of this section and the system has received written approval from the State that it is appropriate to resume triennial monitoring.

(*3*) The system may reduce the number of water quality parameter tap water samples required in accordance with §141.87(e)(1) and the frequency with which it collects such samples in accordance with §141.87(e)(2). Such a system may not resume triennial monitoring for water quality parameters at the tap until it demonstrates, in accordance with the requirements of §141.87(e)(2), that it has re-qualified for triennial monitoring.

(vii) Any water system subject to a reduced monitoring frequency under paragraph (d)(4) of this section shall notify the State in writing in accordance with §141.90(a)(3) of any upcoming long-term change in treatment or addition of a new source as described in that section. The State must review and approve the addition of a new source or long-term change in water treatment before it is implemented by the water system. The State may require the system to resume sampling in accordance with paragraph (d)(3) of this section and collect the number of samples specified for standard monitoring under paragraph (c) of this section or take other appropriate steps

such as increased water quality parameter monitoring or re-evaluation of its corrosion control treatment given the potentially different water quality considerations.

(e) *Additional monitoring by systems.* The results of any monitoring conducted in addition to the minimum requirements of this section shall be considered by the system and the State in making any determinations (*i.e.*, calculating the 90th percentile lead or copper level) under this subpart.

(f) *Invalidation of lead or copper tap water samples.* A sample invalidated under this paragraph does not count toward determining lead or copper 90th percentile levels under §141.80(c)(3) or toward meeting the minimum monitoring requirements of paragraph (c) of this section.

(1) The State may invalidate a lead or copper tap water sample at least if one of the following conditions is met.

(i) The laboratory establishes that improper sample analysis caused erroneous results.

(ii) The State determines that the sample was taken from a site that did not meet the site selection criteria of this section.

(iii) The sample container was damaged in transit.

(iv) There is substantial reason to believe that the sample was subject to tampering.

(2) The system must report the results of all samples to the State and all supporting documentation for samples the system believes should be invalidated.

(3) To invalidate a sample under paragraph (f)(1) of this section, the decision and the rationale for the decision must be documented in writing. States may not invalidate a sample solely on the grounds that a follow-up sample result is higher or lower than that of the original sample.

(4) The water system must collect replacement samples for any samples invalidated under this section if, after the invalidation of one or more samples, the system has too few samples to meet the minimum requirements of paragraph (c) of this section. Any such replacement samples must be taken as soon as possible, but no later than 20 days after the date the State invalidates the sample or by the end of the applicable monitoring period, whichever occurs later. Replacement samples taken after the end of the applicable monitoring period shall not also be used to meet the monitoring requirements of a subsequent monitoring period. The replacement samples shall be taken at the same locations as the invalidated samples or, if that is not possible, at locations other than those already used for sampling during the monitoring period.

(g) *Monitoring waivers for small systems.* Any small system that meets the criteria of this paragraph may apply to the State to reduce the frequency of monitoring for lead and copper under this section to once every nine years (*i.e.*, a ''full waiver'') if it meets all of the materials criteria specified in paragraph (g)(1) of this section and all of the monitoring criteria specified in paragraph (g)(2) of this section. If State regulations permit, any small system that meets the criteria in paragraphs (g)(1) and (2) of this section only for lead, or only for copper, may apply to the State for a waiver to reduce the frequency of tap water monitoring to once every nine years for that contaminant only (*i.e.*, a ''partial waiver'').

(1) *Materials criteria.* The system must demonstrate that its distribution system and service lines and all drinking water supply plumbing, including plumbing conveying drinking water within all residences and buildings connected to the system, are free of lead-containing materials and/or copper-containing materials, as those terms are defined in this paragraph, as follows:

(i) *Lead.* To qualify for a full waiver, or a waiver of the tap water monitoring requirements for lead (*i.e.*, a ''lead waiver''), the water system must provide certification and supporting documentation to the State that the system is free of all lead-containing materials, as follows:

(A) It contains no plastic pipes which contain lead plasticizers, or plastic service lines which contain lead plasticizers; and

(B) It is free of lead service lines, lead pipes, lead soldered pipe joints, and leaded brass or bronze alloy fittings and fixtures, unless such fittings

and fixtures meet the specifications of any standard established pursuant to 42 U.S.C. 300g–6(e) (SDWA section 1417(e)).

(ii) *Copper*. To qualify for a full waiver, or a waiver of the tap water monitoring requirements for copper (*i.e.*, a ''copper waiver''), the water system must provide certification and supporting documentation to the State that the system contains no copper pipes or copper service lines.

(2) *Monitoring criteria for waiver issuance*. The system must have completed at least one 6-month round of standard tap water monitoring for lead and copper at sites approved by the State and from the number of sites required by paragraph (c) of this section and demonstrate that the 90th percentile levels for any and all rounds of monitoring conducted since the system became free of all lead-containing and/or copper-containing materials, as appropriate, meet the following criteria.

(i) *Lead levels*. To qualify for a full waiver, or a lead waiver, the system must demonstrate that the 90th percentile lead level does not exceed 0.005 mg/L.

(ii) *Copper levels*. To qualify for a full waiver, or a copper waiver, the system must demonstrate that the 90th percentile copper level does not exceed 0.65 mg/L.

(3) *State approval of waiver application*. The State shall notify the system of its waiver determination, in writing, setting forth the basis of its decision and any condition of the waiver. As a condition of the waiver, the State may require the system to perform specific activities (e.g., limited monitoring, periodic outreach to customers to remind them to avoid installation of materials that might void the waiver) to avoid the risk of lead or copper concentration of concern in tap water. The small system must continue monitoring for lead and copper at the tap as required by paragraphs (d)(1) through (d)(4) of this section, as appropriate, until it receives written notification from the State that the waiver has been approved.

(4) *Monitoring frequency for systems with waivers*. (i) A system with a full waiver must conduct tap water monitoring for lead and copper in accordance with paragraph (d)(4)(iv) of this section at the reduced number of sampling sites identified in paragraph (c) of this section at least once every nine years and provide the materials certification specified in paragraph (g)(1) of this section for both lead and copper to the State along with the monitoring results. Samples collected every nine years shall be collected no later than every ninth calendar year.

(ii) A system with a partial waiver must conduct tap water monitoring for the waived contaminant in accordance with paragraph (d)(4)(iv) of this section at the reduced number of sampling sites specified in paragraph (c) of this section at least once every nine years and provide the materials certification specified in paragraph (g)(1) of this section pertaining to the waived contaminant along with the monitoring results. Such a system also must continue to monitor for the non-waived contaminant in accordance with requirements of paragraph (d)(1) through (d)(4) of this section, as appropriate.

(iii) Any water system with a full or partial waiver shall notify the State in writing in accordance with § 141.90(a)(3) of any upcoming long-term change in treatment or addition of a new source, as described in that section. The State must review and approve the addition of a new source or long-term change in water treatment before it is implemented by the water system. The State has the authority to require the system to add or modify waiver conditions (e.g., require recertification that the system is free of lead-containing and/or copper-containing materials, require additional round(s) of monitoring), if it deems such modifications are necessary to address treatment or source water changes at the system.

(iv) If a system with a full or partial waiver becomes aware that it is no longer free of lead-containing or copper-containing materials, as appropriate, (e.g., as a result of new construction or repairs), the system shall notify the State in writing no later than 60 days after becoming aware of such a change.

(5) *Continued eligibility*. If the system continues to satisfy the requirements of paragraph (g)(4) of this section, the waiver will be renewed automatically, unless any of the conditions listed in

paragraph (g)(5)(i) through (g)(5)(iii) of this section occurs. A system whose waiver has been revoked may re-apply for a waiver at such time as it again meets the appropriate materials and monitoring criteria of paragraphs (g)(1) and (g)(2) of this section.

(i) A system with a full waiver or a lead waiver no longer satisfies the materials criteria of paragraph (g)(1)(i) of this section or has a 90th percentile lead level greater than 0.005 mg/L.

(ii) A system with a full waiver or a copper waiver no longer satisfies the materials criteria of paragraph (g)(1)(ii) of this section or has a 90th percentile copper level greater than 0.65 mg/L.

(iii) The State notifies the system, in writing, that the waiver has been revoked, setting forth the basis of its decision.

(6) *Requirements following waiver revocation.* A system whose full or partial waiver has been revoked by the State is subject to the corrosion control treatment and lead and copper tap water monitoring requirements, as follows:

(i) If the system exceeds the lead and/or copper action level, the system must implement corrosion control treatment in accordance with the deadlines specified in §141.81(e), and any other applicable requirements of this subpart.

(ii) If the system meets both the lead and the copper action level, the system must monitor for lead and copper at the tap no less frequently than once every three years using the reduced number of sample sites specified in paragraph (c) of this section.

(7) *Pre-existing waivers.* Small system waivers approved by the State in writing prior to April 11, 2000 shall remain in effect under the following conditions:

(i) If the system has demonstrated that it is both free of lead-containing and copper-containing materials, as required by paragraph (g)(1) of this section and that its 90th percentile lead levels and 90th percentile copper levels meet the criteria of paragraph (g)(2) of this section, the waiver remains in effect so long as the system continues to meet the waiver eligibility criteria of paragraph (g)(5) of this section. The first round of tap water monitoring conducted pursuant to paragraph (g)(4) of this section shall be completed no later than nine years after the last time the system has monitored for lead and copper at the tap.

(ii) If the system has met the materials criteria of paragraph (g)(1) of this section but has not met the monitoring criteria of paragraph (g)(2) of this section, the system shall conduct a round of monitoring for lead and copper at the tap demonstrating that it meets the criteria of paragraph (g)(2) of this section no later than September 30, 2000. Thereafter, the waiver shall remain in effect as long as the system meets the continued eligibility criteria of paragraph (g)(5) of this section. The first round of tap water monitoring conducted pursuant to paragraph (g)(4) of this section shall be completed no later than nine years after the round of monitoring conducted pursuant to paragraph (g)(2) of this section.

[56 FR 26548, June 7, 1991; 56 FR 32113, July 15, 1991; 57 FR 28788, June 29, 1992, as amended at 65 FR 2007, Jan. 12, 2000; 72 FR 57817, Oct. 10, 2007]

§ 141.87 Monitoring requirements for water quality parameters.

All large water systems, and all small- and medium-size systems that exceed the lead or copper action level shall monitor water quality parameters in addition to lead and copper in accordance with this section. The requirements of this section are summarized in the table at the end of this section.

(a) *General requirements*—(1) *Sample collection methods.* (i) Tap samples shall be representative of water quality throughout the distribution system taking into account the number of persons served, the different sources of water, the different treatment methods employed by the system, and seasonal variability. Tap sampling under this section is not required to be conducted at taps targeted for lead and copper sampling under §141.86(a). [Note: Systems may find it convenient to conduct tap sampling for water quality parameters at sites used for coliform sampling under 40 CFR 141.21.]

(ii) Samples collected at the entry point(s) to the distribution system shall be from locations representative

of each source after treatment. If a system draws water from more than one source and the sources are combined before distribution, the system must sample at an entry point to the distribution system during periods of normal operating conditions (*i.e.*, when water is representative of all sources being used).

(2) *Number of samples.* (i) Systems shall collect two tap samples for applicable water quality parameters during each monitoring period specified under paragraphs (b) through (e) of this section from the following number of sites.

System size (No. people served)	No. of sites for water quality parameters
>100,000	25
10,001–100,000	10
3,301 to 10,000	3
501 to 3,300	2
101 to 500	1
≤100	1

(ii) Except as provided in paragraph (c)(3) of this section, systems shall collect two samples for each applicable water quality parameter at each entry point to the distribution system during each monitoring period specified in paragraph (b) of this section. During each monitoring period specified in paragraphs (c)–(e) of this section, systems shall collect one sample for each applicable water quality parameter at each entry point to the distribution system.

(b) *Initial sampling* All large water systems shall measure the applicable water quality parameters as specified below at taps and at each entry point to the distribution system during each six-month monitoring period specified in §141.86(d)(1). All small and medium-size systems shall measure the applicable water quality parameters at the locations specified below during each six-month monitoring period specified in §141.86(d)(1) during which the system exceeds the lead or copper action level.

(1) At taps:

(i) pH;

(ii) Alkalinity;

(iii) Orthophosphate, when an inhibitor containing a phosphate compound is used;

(iv) Silica, when an inhibitor containing a silicate compound is used;

(v) Calcium;

(vi) Conductivity; and

(vii) Water temperature.

(2) At each entry point to the distribution system: all of the applicable parameters listed in paragraph (b)(1) of this section.

(c) *Monitoring after installation of corrosion control.* Any large system which installs optimal corrosion control treatment pursuant to §141.81(d)(4) shall measure the water quality parameters at the locations and frequencies specified below during each six-month monitoring period specified in §141.86(d)(2)(i). Any small or medium-size system which installs optimal corrosion control treatment shall conduct such monitoring during each six-month monitoring period specified in §141.86(d)(2)(ii) in which the system exceeds the lead or copper action level.

(1) At taps, two samples for:

(i) pH;

(ii) Alkalinity;

(iii) Orthophosphate, when an inhibitor containing a phosphate compound is used;

(iv) Silica, when an inhibitor containing a silicate compound is used;

(v) Calcium, when calcium carbonate stabilization is used as part of corrosion control.

(2) Except as provided in paragraph (c)(3) of this section, at each entry point to the distribution system, at least one sample no less frequently than every two weeks (biweekly) for:

(i) pH;

(ii) When alkalinity is adjusted as part of optimal corrosion control, a reading of the dosage rate of the chemical used to adjust alkalinity, and the alkalinity concentration; and

(iii) When a corrosion inhibitor is used as part of optimal corrosion control, a reading of the dosage rate of the inhibitor used, and the concentration of orthophosphate or silica (whichever is applicable).

(3) Any ground water system can limit entry point sampling described in paragraph (c)(2) of this section to those entry points that are representative of water quality and treatment conditions throughout the system. If water from untreated ground water sources mixes with water from treated ground

water sources, the system must monitor for water quality parameters both at representative entry points receiving treatment and representative entry points receiving no treatment. Prior to the start of any monitoring under this paragraph, the system shall provide to the State written information identifying the selected entry points and documentation, including information on seasonal variability, sufficient to demonstrate that the sites are representative of water quality and treatment conditions throughout the system.

(d) *Monitoring after State specifies water quality parameter values for optimal corrosion control.* After the State specifies the values for applicable water quality control parameters reflecting optimal corrosion control treatment under §141.82(f), all large systems shall measure the applicable water quality parameters in accordance with paragraph (c) of this section and determine compliance with the requirements of §141.82(g) every six months with the first six-month period to begin on either January 1 or July 1, whichever comes first, after the State specifies the optimal values under §141.82(f). Any small or medium-size system shall conduct such monitoring during each six-month period specified in this paragraph in which the system exceeds the lead or copper action level. For any such small and medium-size system that is subject to a reduced monitoring frequency pursuant to §141.86(d)(4) at the time of the action level exceedance, the start of the applicable six-month monitoring period under this paragraph shall coincide with the start of the applicable monitoring period under §141.86(d)(4). Compliance with State-designated optimal water quality parameter values shall be determined as specified under §141.82(g).

(e) *Reduced monitoring.* (1) Any water system that maintains the range of values for the water quality parameters reflecting optimal corrosion control treatment during each of two consecutive six-month monitoring periods under paragraph (d) of this section shall continue monitoring at the entry point(s) to the distribution system as specified in paragraph (c)(2) of this section. Such system may collect two tap samples for applicable water quality parameters from the following reduced number of sites during each six-month monitoring period.

System size (No. of people served)	Reduced No. of sites for water quality parameters
>100,000	10
10,001 to 100,000	7
3,301 to 10,000	3
501 to 3,300	2
101 to 500	1
≤100	1

(2)(i) Any water system that maintains the range of values for the water quality parameters reflecting optimal corrosion control treatment specified by the State under §141.82(f) during three consecutive years of monitoring may reduce the frequency with which it collects the number of tap samples for applicable water quality parameters specified in this paragraph (e)(1) of this section from every six months to annually. This sampling begins during the calendar year immediately following the end of the monitoring period in which the third consecutive year of six-month monitoring occurs. Any water system that maintains the range of values for the water quality parameters reflecting optimal corrosion control treatment specified by the State under §141.82(f), during three consecutive years of annual monitoring under this paragraph may reduce the frequency with which it collects the number of tap samples for applicable water quality parameters specified in paragraph (e)(1) of this section from annually to every three years. This sampling begins no later than the third calendar year following the end of the monitoring period in which the third consecutive year of monitoring occurs.

(ii) A water system may reduce the frequency with which it collects tap samples for applicable water quality parameters specified in paragraph (e)(1) of this section to every three years if it demonstrates during two consecutive monitoring periods that its tap water lead level at the 90th percentile is less than or equal to the PQL for lead specified in §141.89 (a)(1)(ii), that its tap water copper level at the 90th percentile is less than or equal to 0.65 mg/L for copper in §141.80(c)(2), and that it

also has maintained the range of values for the water quality parameters reflecting optimal corrosion control treatment specified by the State under § 141.82(f). Monitoring conducted every three years shall be done no later than every third calendar year.

(3) A water system that conducts sampling annually shall collect these samples evenly throughout the year so as to reflect seasonal variability.

(4) Any water system subject to the reduced monitoring frequency that fails to operate at or above the minimum value or within the range of values for the water quality parameters specified by the State in § 141.82(f) for more than nine days in any six-month period specified in § 141.82(g) shall resume distribution system tap water sampling in accordance with the number and frequency requirements in paragraph (d) of this section. Such a system may resume annual monitoring for water quality parameters at the tap at the reduced number of sites specified in paragraph (e)(1) of this section after it has completed two subsequent consecutive six-month rounds of monitoring that meet the criteria of that paragraph and/or may resume triennial monitoring for water quality parameters at the tap at the reduced number of sites after it demonstrates through subsequent rounds of monitoring that it meets the criteria of either paragraph (e)(2)(i) or (e)(2)(ii) of this section.

(f) *Additional monitoring by systems.* The results of any monitoring conducted in addition to the minimum requirements of this section shall be considered by the system and the State in making any determinations (*i.e.*, determining concentrations of water quality parameters) under this section or § 141.82.

SUMMARY OF MONITORING REQUIREMENTS FOR WATER QUALITY PARAMETERS [1]

Monitoring period	Parameters [2]	Location	Frequency
Initial monitoring	pH, alkalinity, orthophosphate or silica [3], calcium, conductivity, temperature.	Taps and at entry point(s) to distribution system.	Every 6 months.
After installation of corrosion control.	pH, alkalinity, orthophosphate or silica [3], calcium [4].	Taps	Every 6 months.
	pH, alkalinity, dosage rate and concentration (if alkalinity adjusted as part of corrosion control), inhibitor dosage rate and inhibitor residual [5].	Entry point(s) to distribution system [6].	No less frequently than every two weeks.
After State specifies parameter values for optimal corrosion control.	pH, alkalinity, orthophosphate or silica [3], calcium [4].	Taps	Every 6 months.
	pH, alkalinity dosage rate and concentration (if alkalinity adjusted as part of corrosion control), inhibitor dosage rate and inhibitor residual [5].	Entry point(s) to distribution system [6].	No less frequently than every two weeks.
Reduced monitoring	pH, alkalinity, orthophosphate or silica [3], calcium [4].	Taps	Every 6 months, annually [7] or every 3 years [8]; reduced number of sites.
	pH, alkalinity dosage rate and concentration (if alkalinity adjusted as part of corrosion control), inhibitor dosage rate and inhibitor residual [5].	Entry point(s) to distribution system [6].	No less frequently than every two weeks.

[1] Table is for illustrative purposes; consult the text of this section for precise regulatory requirements.

[2] Small and medium-size systems have to monitor for water quality parameters only during monitoring periods in which the system exceeds the lead or copper action level.

[3] Orthophosphate must be measured only when an inhibitor containing a phosphate compound is used. Silica must be measured only when an inhibitor containing silicate compound is used.

[4] Calcium must be measured only when calcium carbonate stabilization is used as part of corrosion control.

[5] Inhibitor dosage rates and inhibitor residual concentrations (orthophosphate or silica) must be measured only when an inhibitor is used.

[6] Ground water systems may limit monitoring to representative locations throughout the system.

[7] Water systems may reduce frequency of monitoring for water quality parameters at the tap from every six months to annually if they have maintained the range of values for water quality parameters reflecting optimal corrosion control during 3 consecutive years of monitoring.

[8] Water systems may further reduce the frequency of monitoring for water quality parameters at the tap from annually to once every 3 years if they have maintained the range of values for water quality parameters reflecting optimal corrosion control during 3 consecutive years of annual monitoring. Water systems may accelerate to triennial monitoring for water quality parameters at the tap if they have maintained 90th percentile lead levels less than or equal to 0.005 mg/L, 90th percentile copper levels less than or equal to 0.65 mg/L, and the range of water quality parameters designated by the State under § 141.82(f) as representing optimal corrosion control during two consecutive six-month monitoring periods.

[56 FR 26548, June 7, 1991; 57 FR 28788, June 29, 1992, as amended at 59 FR 33862, June 30, 1994; 65 FR 2010, Jan. 12, 2000; 72 FR 57818, Oct. 10, 2007]

§ 141.88 Monitoring requirements for lead and copper in source water.

(a) *Sample location, collection methods, and number of samples.* (1) A water system that fails to meet the lead or copper action level on the basis of tap samples collected in accordance with § 141.86 shall collect lead and copper source water samples in accordance with the following requirements regarding sample location, number of samples, and collection methods:

(i) Groundwater systems shall take a minimum of one sample at every entry point to the distribution system which is representative of each well after treatment (hereafter called a sampling point). The system shall take one sample at the same sampling point unless conditions make another sampling point more representative of each source or treatment plant.

(ii) Surface water systems shall take a minimum of one sample at every entry point to the distribution system after any application of treatment or in the distribution system at a point which is representative of each source after treatment (hereafter called a sampling point). The system shall take each sample at the same sampling point unless conditions make another sampling point more representative of each source or treatment plant.

NOTE TO PARAGRAPH (a)(1)(ii): For the purposes of this paragraph, surface water systems include systems with a combination of surface and ground sources.

(iii) If a system draws water from more than one source and the sources are combined before distribution, the system must sample at an entry point to the distribution system during periods of normal operating conditions (*i.e.*, when water is representative of all sources being used).

(iv) The State may reduce the total number of samples which must be analyzed by allowing the use of compositing. Compositing of samples must be done by certified laboratory personnel. Composite samples from a maximum of five samples are allowed, provided that if the lead concentration in the composite sample is greater than or equal to 0.001 mg/L or the copper concentration is greater than or equal to 0.160 mg/L, then either:

(A) A follow-up sample shall be taken and analyzed within 14 days at each sampling point included in the composite; or

(B) If duplicates of or sufficient quantities from the original samples from each sampling point used in the composite are available, the system may use these instead of resampling.

(2) Where the results of sampling indicate an exceedance of maximum permissible source water levels established under § 141.83(b)(4), the State may require that one additional sample be collected as soon as possible after the initial sample was taken (but not to exceed two weeks) at the same sampling point. If a State-required confirmation sample is taken for lead or copper, then the results of the initial and confirmation sample shall be averaged in determining compliance with the State-specified maximum permissible levels. Any sample value below the detection limit shall be considered to be zero. Any value above the detection limit but below the PQL shall either be considered as the measured value or be considered one-half the PQL.

(b) *Monitoring frequency after system exceeds tap water action level.* Any system which exceeds the lead or copper action level at the tap shall collect one source water sample from each entry point to the distribution system no later than six months after the end of the monitoring period during which the lead or copper action level was exceeded. For monitoring periods that are annual or less frequent, the end of the monitoring period is September 30 of the calendar year in which the sampling occurs, or if the State has established an alternate monitoring period, the last day of that period.

(c) *Monitoring frequency after installation of source water treatment.* Any system which installs source water treatment pursuant to § 141.83(a)(3) shall collect an additional source water sample from each entry point to the distribution system during two consecutive

six-month monitoring periods by the deadline specified in § 141.83(a)(4).

(d) *Monitoring frequency after State specifies maximum permissible source water levels or determines that source water treatment is not needed.* (1) A system shall monitor at the frequency specified below in cases where the State specifies maximum permissible source water levels under § 141.83(b)(4) or determines that the system is not required to install source water treatment under § 141.83(b)(2).

(i) A water system using only groundwater shall collect samples once during the three-year compliance period (as that term is defined in § 141.2) in effect when the applicable State determination under paragraph (d)(1) of this section is made. Such systems shall collect samples once during each subsequent compliance period. Triennial samples shall be collected every third calendar year.

(ii) A water system using surface water (or a combination of surface and ground water) shall collect samples once during each calendar year, the first annual monitoring period to begin during the year in which the applicable State determination is made under paragraph (d)(1) of this section.

(2) A system is not required to conduct source water sampling for lead and/or copper if the system meets the action level for the specific contaminant in tap water samples during the entire source water sampling period applicable to the system under paragraph (d)(1) (i) or (ii) of this section.

(e) *Reduced monitoring frequency.* (1) A water system using only ground water may reduce the monitoring frequency for lead and copper in source water to once during each nine-year compliance cycle (as that term is defined in § 141.2) provided that the samples are collected no later than every ninth calendar year and if the system meets one of the following criteria:

(i) The system demonstrates that finished drinking water entering the distribution system has been maintained below the maximum permissible lead and copper concentrations specified by the State in § 141.83(b)(4) during at least three consecutive compliance periods under paragraph (d)(1) of this section; or

(ii) The State has determined that source water treatment is not needed and the system demonstrates that, during at least three consecutive compliance periods in which sampling was conducted under paragraph (d)(1) of this section, the concentration of lead in source water was less than or equal to 0.005 mg/L and the concentration of copper in source water was less than or equal to 0.65 mg/L.

(2) A water system using surface water (or a combination of surface water and ground water) may reduce the monitoring frequency in paragraph (d)(1) of this section to once during each nine-year compliance cycle (as that term is defined in § 141.2) provided that the samples are collected no later than every ninth calendar year and if the system meets one of the following criteria:

(i) The system demonstrates that finished drinking water entering the distribution system has been maintained below the maximum permissible lead and copper concentrations specified by the State in § 141.83(b)(4) for at least three consecutive years; or

(ii) The State has determined that source water treatment is not needed and the system demonstrates that, during at least three consecutive years, the concentration of lead in source water was less than or equal to 0.005 mg/L and the concentration of copper in source water was less than or equal to 0.65 mg/L.

(3) A water system that uses a new source of water is not eligible for reduced monitoring for lead and/or copper until concentrations in samples collected from the new source during three consecutive monitoring periods are below the maximum permissible lead and copper concentrations specified by the State in § 141.83(a)(5).

[56 FR 26548, June 7, 1991; 57 FR 28788 and 28789, June 29, 1992, as amended at 65 FR 2012, Jan. 12, 2000; 72 FR 57819, Oct. 10, 2007]

§ 141.89 Analytical methods.

(a) Analyses for lead, copper, pH, conductivity, calcium, alkalinity, orthophosphate, silica, and temperature shall be conducted with the methods in § 141.23(k)(1).

(1) Analyses for alkalinity, calcium, conductivity, orthophosphate, pH, silica, and temperature may be performed by any person acceptable to the State. Analyses under this section for lead and copper shall only be conducted by laboratories that have been certified by EPA or the State. To obtain certification to conduct analyses for lead and copper, laboratories must:

(i) Analyze Performance Evaluation samples, which include lead and copper, provided by or acceptable to EPA or the State at least once a year by each method for which the laboratory desires certification; and

(ii) Achieve quantitative acceptance limits as follows:

(A) For lead: ±30 percent of the actual amount in the Performance Evaluation sample when the actual amount is greater than or equal to 0.005 mg/L. The Practical Quantitation Level, or PQL for lead is 0.005 mg/L.

(B) For Copper: ±10 percent of the actual amount in the Performance Evaluation sample when the actual amount is greater than or equal to 0.050 mg/L. The Practical Quantitation Level, or PQL for copper is 0.050 mg/L.

(iii) Achieve the method detection limit for lead of 0.001 mg/L according to the procedures in appendix B of part 136 of this title. This need only be accomplished if the laboratory will be processing source water composite samples under §141.88(a)(1)(iv).

(iv) Be currently certified by EPA or the State to perform analyses to the specifications described in paragraph (a)(1) of this section.

(2) States have the authority to allow the use of previously collected monitoring data for purposes of monitoring, if the data were collected and analyzed in accordance with the requirements of this subpart.

(3) All lead and copper levels measured between the PQL and MDL must be either reported as measured or they can be reported as one-half the PQL specified for lead and copper in paragraph (a)(1)(ii) of this section. All levels below the lead and copper MDLs must be reported as zero.

(4) All copper levels measured between the PQL and the MDL must be either reported as measured or they can be reported as one-half the PQL (0.025 mg/L). All levels below the copper MDL must be reported as zero.

(b) [Reserved]

[56 FR 26548, June 7, 1991, as amended at 57 FR 28789, June 29, 1992; 57 FR 31847, July 17, 1992; 59 FR 33863, June 30, 1994; 59 FR 62470, Dec. 5, 1994; 64 FR 67466, Dec. 1, 1999; 65 FR 2012, Jan. 12, 2000; 72 FR 57819, Oct. 10, 2007]

§141.90 Reporting requirements.

All water systems shall report all of the following information to the State in accordance with this section.

(a) *Reporting requirements for tap water monitoring for lead and copper and for water quality parameter monitoring.* (1) Except as provided in paragraph (a)(1)(viii) of this section, a water system shall report the information specified below for all tap water samples specified in §141.86 and for all water quality parameter samples specified in §141.87 within the first 10 days following the end of each applicable monitoring period specified in §141.86 and §141.87 (*i.e.*, every six months, annually, every 3 years, or every 9 years). For monitoring periods with a duration less than six months, the end of the monitoring period is the last date samples can be collected during that period as specified in §§141.86 and 141.87.

(i) The results of all tap samples for lead and copper including the location of each site and the criteria under §141.86(a) (3), (4), (5), (6), and/or (7) under which the site was selected for the system's sampling pool;

(ii) Documentation for each tap water lead or copper sample for which the water system requests invalidation pursuant to §141.86(f)(2);

(iii) [Reserved]

(iv) The 90th percentile lead and copper concentrations measured from among all lead and copper tap water samples collected during each monitoring period (calculated in accordance with §141.80(c)(3)), unless the State calculates the system's 90th percentile lead and copper levels under paragraph (h) of this section;

(v) With the exception of initial tap sampling conducted pursuant to §141.86(d)(1), the system shall designate any site which was not sampled during previous monitoring periods, and include an explanation of why sampling sites have changed;

(vi) The results of all tap samples for pH, and where applicable, alkalinity, calcium, conductivity, temperature, and orthophosphate or silica collected under § 141.87 (b)–(e);

(vii) The results of all samples collected at the entry point(s) to the distribution system for applicable water quality parameters under § 141.87 (b)–(e);

(viii) A water system shall report the results of all water quality parameter samples collected under § 141.87(c) through (f) during each six-month monitoring period specified in § 141.87(d) within the first 10 days following the end of the monitoring period unless the State has specified a more frequent reporting requirement.

(2) For a non-transient non-community water system, or a community water system meeting the criteria of § 141.85(b)(7), that does not have enough taps that can provide first-draw samples, the system must either:

(i) Provide written documentation to the State identifying standing times and locations for enough non-first-draw samples to make up its sampling pool under § 141.86(b)(5) by the start of the first applicable monitoring period under § 141.86(d) that commences after April 11, 2000, unless the State has waived prior State approval of non-first-draw sample sites selected by the system pursuant to § 141.86(b)(5); or

(ii) If the State has waived prior approval of non-first-draw sample sites selected by the system, identify, in writing, each site that did not meet the six-hour minimum standing time and the length of standing time for that particular substitute sample collected pursuant to § 141.86(b)(5) and include this information with the lead and copper tap sample results required to be submitted pursuant to paragraph (a)(1)(i) of this section.

(3) At a time specified by the State, or if no specific time is designated by the State, then as early as possible prior to the addition of a new source or any long-term change in water treatment, a water system deemed to have optimized corrosion control under § 141.81(b)(3), a water system subject to reduced monitoring pursuant to § 141.86(d)(4), or a water system subject to a monitoring waiver pursuant to § 141.86(g), shall submit written documentation to the State describing the change or addition. The State must review and approve the addition of a new source or long-term change in treatment before it is implemented by the water system. Examples of long-term treatment changes include the addition of a new treatment process or modification of an existing treatment process. Examples of modifications include switching secondary disinfectants, switching coagulants (e.g., alum to ferric chloride), and switching corrosion inhibitor products (e.g., orthophosphate to blended phosphate). Long-term changes can include dose changes to existing chemicals if the system is planning long-term changes to its finished water pH or residual inhibitor concentration. Long-term treatment changes would not include chemical dose fluctuations associated with daily raw water quality changes.

(4) Any small system applying for a monitoring waiver under § 141.86(g), or subject to a waiver granted pursuant to § 141.86(g)(3), shall provide the following information to the State in writing by the specified deadline:

(i) By the start of the first applicable monitoring period in § 141.86(d), any small water system applying for a monitoring waiver shall provide the documentation required to demonstrate that it meets the waiver criteria of §§ 141.86(g)(1) and (2).

(ii) No later than nine years after the monitoring previously conducted pursuant to § 141.86(g)(2) or § 141.86(g)(4)(i), each small system desiring to maintain its monitoring waiver shall provide the information required by §§ 141.86(g)(4)(i) and (ii).

(iii) No later than 60 days after it becomes aware that it is no longer free of lead-containing and/or copper-containing material, as appropriate, each small system with a monitoring waiver shall provide written notification to the State, setting forth the circumstances resulting in the lead-containing and/or copper-containing materials being introduced into the system and what corrective action, if any, the system plans to remove these materials.

(iv) By October 10, 2000, any small system with a waiver granted prior to

April 11, 2000 and that has not previously met the requirements of §141.86(g)(2) shall provide the information required by that paragraph.

(5) Each ground water system that limits water quality parameter monitoring to a subset of entry points under §141.87(c)(3) shall provide, by the commencement of such monitoring, written correspondence to the State that identifies the selected entry points and includes information sufficient to demonstrate that the sites are representative of water quality and treatment conditions throughout the system.

(b) *Source water monitoring reporting requirements.* (1) A water system shall report the sampling results for all source water samples collected in accordance with §141.88 within the first 10 days following the end of each source water monitoring period (*i.e.*, annually, per compliance period, per compliance cycle) specified in §141.88.

(2) With the exception of the first round of source water sampling conducted pursuant to §141.88(b), the system shall specify any site which was not sampled during previous monitoring periods, and include an explanation of why the sampling point has changed.

(c) *Corrosion control treatment reporting requirements.* By the applicable dates under §141.81, systems shall report the following information:

(1) For systems demonstrating that they have already optimized corrosion control, information required in §141.81(b) (2) or (3).

(2) For systems required to optimize corrosion control, their recommendation regarding optimal corrosion control treatment under §141.82(a).

(3) For systems required to evaluate the effectiveness of corrosion control treatments under §141.82(c), the information required by that paragraph.

(4) For systems required to install optimal corrosion control designated by the State under §141.82(d), a letter certifying that the system has completed installing that treatment.

(d) *Source water treatment reporting requirements.* By the applicable dates in §141.83, systems shall provide the following information to the State:

(1) If required under §141.83(b)(1), their recommendation regarding source water treatment;

(2) For systems required to install source water treatment under §141.83(b)(2), a letter certifying that the system has completed installing the treatment designated by the State within 24 months after the State designated the treatment.

(e) *Lead service line replacement reporting requirements.* Systems shall report the following information to the State to demonstrate compliance with the requirements of §141.84:

(1) No later than 12 months after the end of a monitoring period in which a system exceeds the lead action level in sampling referred to in §141.84(a), the system must submit written documentation to the State of the material evaluation conducted as required in §141.86(a), identify the initial number of lead service lines in its distribution system at the time the system exceeds the lead action level, and provide the system's schedule for annually replacing at least 7 percent of the initial number of lead service lines in its distribution system.

(2) No later than 12 months after the end of a monitoring period in which a system exceeds the lead action level in sampling referred to in §141.84(a), and every 12 months thereafter, the system shall demonstrate to the State in writing that the system has either:

(i) Replaced in the previous 12 months at least 7 percent of the initial lead service lines (or a greater number of lines specified by the State under §141.84(e)) in its distribution system, or

(ii) Conducted sampling which demonstrates that the lead concentration in all service line samples from an individual line(s), taken pursuant to §141.86(b)(3), is less than or equal to 0.015 mg/L. In such cases, the total number of lines replaced and/or which meet the criteria in §141.84(c) shall equal at least 7 percent of the initial number of lead lines identified under paragraph (e)(1) of this section (or the percentage specified by the State under §141.84(e)).

(3) The annual letter submitted to the State under paragraph (e)(2) of this section shall contain the following information:

(i) The number of lead service lines scheduled to be replaced during the previous year of the system's replacement schedule;

(ii) The number and location of each lead service line replaced during the previous year of the system's replacement schedule;

(iii) If measured, the water lead concentration and location of each lead service line sampled, the sampling method, and the date of sampling.

(4) Any system which collects lead service line samples following partial lead service line replacement required by §141.84 shall report the results to the State within the first ten days of the month following the month in which the system receives the laboratory results, or as specified by the State. States, at their discretion may eliminate this requirement to report these monitoring results. Systems shall also report any additional information as specified by the State, and in a time and manner prescribed by the State, to verify that all partial lead service line replacement activities have taken place.

(f) *Public education program reporting requirements.* (1) Any water system that is subject to the public education requirements in §141.85 shall, within ten days after the end of each period in which the system is required to perform public education in accordance with §141.85(b), send written documentation to the State that contains:

(i) A demonstration that the system has delivered the public education materials that meet the content requirements in §141.85(a) and the delivery requirements in §141.85(b); and

(ii) A list of all the newspapers, radio stations, television stations, and facilities and organizations to which the system delivered public education materials during the period in which the system was required to perform public education tasks.

(2) Unless required by the State, a system that previously has submitted the information required by paragraph (f)(1)(ii) of this section need not resubmit the information required by paragraph (f)(1)(ii) of this section, as long as there have been no changes in the distribution list and the system certifies that the public education materials were distributed to the same list submitted previously.

(3) No later than 3 months following the end of the monitoring period, each system must mail a sample copy of the consumer notification of tap results to the State along with a certification that the notification has been distributed in a manner consistent with the requirements of §141.85(d).

(g) *Reporting of additional monitoring data.* Any system which collects sampling data in addition to that required by this subpart shall report the results to the State within the first ten days following the end of the applicable monitoring period under §§141.86, 141.87 and 141.88 during which the samples are collected.

(h) *Reporting of 90th percentile lead and copper concentrations where the State calculates a system's 90th percentile concentrations.* A water system is not required to report the 90th percentile lead and copper concentrations measured from among all lead and copper tap water samples collected during each monitoring period, as required by paragraph (a)(1)(iv) of this section if:

(1) The State has previously notified the water system that it will calculate the water system's 90th percentile lead and copper concentrations, based on the lead and copper tap results submitted pursuant to paragraph (h)(2)(i) of this section, and has specified a date before the end of the applicable monitoring period by which the system must provide the results of lead and copper tap water samples;

(2) The system has provided the following information to the State by the date specified in paragraph (h)(1) of this section:

(i) The results of all tap samples for lead and copper including the location of each site and the criteria under §141.86(a)(3), (4), (5), (6), and/or (7) under which the site was selected for the system's sampling pool, pursuant to paragraph (a)(1)(i) of this section; and

(ii) An identification of sampling sites utilized during the current monitoring period that were not sampled during previous monitoring periods, and an explanation why sampling sites have changed; and

(3) The State has provided the results of the 90th percentile lead and copper

calculations, in writing, to the water system before the end of the monitoring period.

[56 FR 26548, June 7, 1991; 57 FR 28789, June 29, 1992, as amended at 59 FR 33864, June 30, 1994; 65 FR 2012, Jan. 12, 2000; 72 FR 57819, Oct. 10, 2007]

§ 141.91 Recordkeeping requirements.

Any system subject to the requirements of this subpart shall retain on its premises original records of all sampling data and analyses, reports, surveys, letters, evaluations, schedules, State determinations, and any other information required by §§ 141.81 through 141.88. Each water system shall retain the records required by this section for no fewer than 12 years.

Subpart J—Use of Non-Centralized Treatment Devices

SOURCE: 52 FR 25716, July 8, 1987, unless otherwise noted.

§ 141.100 Criteria and procedures for public water systems using point-of-entry devices.

(a) Public water systems may use point-of-entry devices to comply with maximum contaminant levels only if they meet the requirements of this section.

(b) It is the responsibility of the public water system to operate and maintain the point-of-entry treatment system.

(c) The public water system must develop and obtain State approval for a monitoring plan before point-of-entry devices are installed for compliance. Under the plan approved by the State, point-of-entry devices must provide health protection equivalent to central water treatment. ''Equivalent'' means that the water would meet all national primary drinking water regulations and would be of acceptable quality similar to water distributed by a well-operated central treatment plant. In addition to the VOCs, monitoring must include physical measurements and observations such as total flow treated and mechanical condition of the treatment equipment.

(d) Effective technology must be properly applied under a plan approved by the State and the microbiological safety of the water must be maintained.

(1) The State must require adequate certification of performance, field testing, and, if not included in the certification process, a rigorous engineering design review of the point-of-entry devices.

(2) The design and application of the point-of-entry devices must consider the tendency for increase in heterotrophic bacteria concentrations in water treated with activated carbon. It may be necessary to use frequent backwashing, post-contactor disinfection, and Heterotrophic Plate Count monitoring to ensure that the microbiological safety of the water is not compromised.

(e) *All consumers shall be protected.* Every building connected to the system must have a point-of-entry device installed, maintained, and adequately monitored. The State must be assured that every building is subject to treatment and monitoring, and that the rights and responsibilities of the public water system customer convey with title upon sale of property.

[52 FR 25716, July 8, 1987; 53 FR 25111, July 1, 1988]

§ 141.101 Use of bottled water.

Public water systems shall not use bottled water to achieve compliance with an MCL. Bottled water may be used on a temporary basis to avoid unreasonable risk to health.

[63 FR 31934, June 11, 1998]

Subpart K—Treatment Techniques

SOURCE: 56 FR 3594, Jan. 30, 1991, unless otherwise noted.

§ 141.110 General requirements.

The requirements of subpart K of this part constitute national primary drinking water regulations. These regulations establish treatment techniques in lieu of maximum contaminant levels for specified contaminants.

§ 141.111 Treatment techniques for acrylamide and epichlorohydrin.

Each public water system must certify annually in writing to the State (using third party or manufacturer's

certification) that when acrylamide and epichlorohydrin are used in drinking water systems, the combination (or product) of dose and monomer level does not exceed the levels specified as follows:

Acrylamide = 0.05% dosed at 1 ppm (or equivalent)
Epichlorohydrin = 0.01% dosed at 20 ppm (or equivalent)

Certifications can rely on manufacturers or third parties, as approved by the State.

Subpart L—Disinfectant Residuals, Disinfection Byproducts, and Disinfection Byproduct Precursors

§ 141.130 General requirements.

(a) The requirements of this subpart L constitute national primary drinking water regulations.

(1) The regulations in this subpart establish criteria under which community water systems (CWSs) and nontransient, noncommunity water systems (NTNCWSs) which add a chemical disinfectant to the water in any part of the drinking water treatment process must modify their practices to meet MCLs and MRDLs in §§ 141.64 and 141.65, respectively, and must meet the treatment technique requirements for disinfection byproduct precursors in § 141.135.

(2) The regulations in this subpart establish criteria under which transient NCWSs that use chlorine dioxide as a disinfectant or oxidant must modify their practices to meet the MRDL for chlorine dioxide in § 141.65.

(3) EPA has established MCLs for TTHM and HAA5 and treatment technique requirements for disinfection byproduct precursors to limit the levels of known and unknown disinfection byproducts which may have adverse health effects. These disinfection byproducts may include chloroform; bromodichloromethane; dibromochloromethane; bromoform; dichloroacetic acid; and trichloroacetic acid.

(b) *Compliance dates*—(1) *CWSs and NTNCWSs.* Unless otherwise noted, systems must comply with the requirements of this subpart as follows. Subpart H systems serving 10,000 or more persons must comply with this subpart beginning January 1, 2002. Subpart H systems serving fewer than 10,000 persons and systems using only ground water not under the direct influence of surface water must comply with this subpart beginning January 1, 2004.

(2) *Transient NCWSs.* Subpart H systems serving 10,000 or more persons and using chlorine dioxide as a disinfectant or oxidant must comply with any requirements for chlorine dioxide in this subpart beginning January 1, 2002. Subpart H systems serving fewer than 10,000 persons and using chlorine dioxide as a disinfectant or oxidant and systems using only ground water not under the direct influence of surface water and using chlorine dioxide as a disinfectant or oxidant must comply with any requirements for chlorine dioxide in this subpart beginning January 1, 2004.

(c) Each CWS and NTNCWS regulated under paragraph (a) of this section must be operated by qualified personnel who meet the requirements specified by the State and are included in a State register of qualified operators.

(d) *Control of disinfectant residuals.* Notwithstanding the MRDLs in § 141.65, systems may increase residual disinfectant levels in the distribution system of chlorine or chloramines (but not chlorine dioxide) to a level and for a time necessary to protect public health, to address specific microbiological contamination problems caused by circumstances such as, but not limited to, distribution line breaks, storm run-off events, source water contamination events, or cross-connection events.

[63 FR 69466, Dec. 16, 1998, as amended at 66 FR 3776, Jan. 16, 2001]

§ 141.131 Analytical requirements.

(a) *General.* (1) Systems must use only the analytical methods specified in this section, or their equivalent as approved by EPA, to demonstrate compliance with the requirements of this subpart and with the requirements of subparts U and V of this part. These methods are effective for compliance monitoring February 16, 1999, unless a

different effective date is specified in this section or by the State.

(2) The following documents are incorporated by reference. The Director of the Federal Register approves this incorporation by reference in accordance with 5 U.S.C. 552(a) and 1 CFR part 51. Copies may be inspected at EPA's Drinking Water Docket, 1301 Constitution Avenue, NW., EPA West, Room B102, Washington, DC 20460, or at the National Archives and Records Administration (NARA). For information on the availability of this material at NARA, call 202–741–6030, or go to: *http://www.archives.gov/federal_register/code_of_federal_regulations/ibr_locations.html*. EPA Method 552.1 is in Methods for the Determination of Organic Compounds in Drinking Water-Supplement II, USEPA, August 1992, EPA/600/R–92/129 (available through National Information Technical Service (NTIS), PB92–207703). EPA Methods 502.2, 524.2, 551.1, and 552.2 are in Methods for the Determination of Organic Compounds in Drinking Water-Supplement III, USEPA, August 1995, EPA/600/R–95/131 (available through NTIS, PB95–261616). EPA Method 300.0 is in Methods for the Determination of Inorganic Substances in Environmental Samples, USEPA, August 1993, EPA/600/R–93/100 (available through NTIS, PB94–121811). EPA Methods 300.1 and 321.8 are in Methods for the Determination of Organic and Inorganic Compounds in Drinking Water, Volume 1, USEPA, August 2000, EPA 815–R–00–014 (available through NTIS, PB2000–106981). EPA Method 317.0, Revision 2.0, ''Determination of Inorganic Oxyhalide Disinfection By-Products in Drinking Water Using Ion Chromatography with the Addition of a Postcolumn Reagent for Trace Bromate Analysis,'' USEPA, July 2001, EPA 815–B–01–001, EPA Method 326.0, Revision 1.0, ''Determination of Inorganic Oxyhalide Disinfection By-Products in Drinking Water Using Ion Chromatography Incorporating the Addition of a Suppressor Acidified Postcolumn Reagent for Trace Bromate Analysis,'' USEPA, June 2002, EPA 815–R–03–007, EPA Method 327.0, Revision 1.1, ''Determination of Chlorine Dioxide and Chlorite Ion in Drinking Water Using Lissamine Green B and Horseradish Peroxidase with Detection by Visible Spectrophotometry,'' USEPA, May 2005, EPA 815–R–05–008 and EPA Method 552.3, Revision 1.0, ''Determination of Haloacetic Acids and Dalapon in Drinking Water by Liquid-liquid Microextraction, Derivatization, and Gas Chromatography with Electron Capture Detection,'' USEPA, July 2003, EPA–815–B–03–002 can be accessed and downloaded directly on-line at *http://www.epa.gov/safewater/methods/sourcalt.html*. EPA Method 415.3, Revision 1.1, ''Determination of Total Organic Carbon and Specific UV Absorbance at 254 nm in Source Water and Drinking Water,'' USEPA, February 2005, EPA/600/R–05/055 can be accessed and downloaded directly on-line at *www.epa.gov/nerlcwww/ordmeth.htm*. Standard Methods 4500–Cl D, 4500–Cl E, 4500–Cl F, 4500–Cl G, 4500–Cl H, 500–Cl I, 4500–ClO_2 D, 4500–ClO_2 E, 6251 B, and 5910 B shall be followed in accordance with Standard Methods for the Examination of Water and Wastewater, 19th or 20th Editions, American Public Health Association, 1995 and 1998, respectively. The cited methods published in either edition may be used. Standard Methods 5310 B, 5310 C, and 5310 D shall be followed in accordance with the Supplement to the 19th Edition of Standard Methods for the Examination of Water and Wastewater, or the Standard Methods for the Examination of Water and Wastewater, 20th Edition, American Public Health Association, 1996 and 1998, respectively. The cited methods published in either edition may be used. Copies may be obtained from the American Public Health Association, 1015 Fifteenth Street, NW., Washington, DC 20005. Standard Methods 4500–Cl D–00, 4500–Cl E–00, 4500–Cl F–00, 4500–Cl G–00, 4500–Cl H–00, 4500–Cl I–00, 4500–ClO_2 E–00, 6251 B–94, 5310 B–00, 5310 C–00, 5310 D–00 and 5910 B–00 are available at *http://www.standardmethods.org* or at EPA's Water Docket. The year in which each method was approved by the Standard Methods Committee is designated by the last two digits in the method number. The methods listed are the only Online versions that are IBR-approved. ASTM Methods D 1253–86 and D 1253–86 (Reapproved 1996) shall be followed in accordance with the Annual Book of

ASTM Standards, Volume 11.01, American Society for Testing and Materials International, 1996 or any ASTM edition containing the IBR-approved version of the method may be used. ASTM Method D1253–03 shall be followed in accordance with the Annual Book of ASTM Standards, Volume 11.01, American Society for Testing and Materials International, 2004 or any ASTM edition containing the IBR-approved version of the method may be used. ASTM Method D 6581–00 shall be followed in accordance with the Annual Book of ASTM Standards, Volume 11.01, American Society for Testing and Materials International, 2001 or any ASTM edition containing the IBR-approved version of the method may be used; copies may be obtained from the American Society for Testing and Materials International, 100 Barr Harbor Drive, West Conshohocken, PA 19428–2959.

(b) *Disinfection byproducts.* (1) Systems must measure disinfection byproducts by the methods (as modified by the footnotes) listed in the following table or one of the alternative methods listed in appendix A to subpart C of this part:

APPROVED METHODS FOR DISINFECTION BYPRODUCT COMPLIANCE MONITORING

Contaminant and methodology [1]	EPA method	Standard method [2]	SM online [9]	ASTM method [3]
TTHM				
P&T/GC/ElCD & PID	502.2 [4].			
P&T/GC/MS	524.2.			
LLE/GC/ECD	551.1.			
HAA5				
LLE (diazomethane)/GC/ECD		6251 B [5]	6251 B–94.	
SPE (acidic methanol)/GC/ECD.	552.1 [5].			
LLE (acidic methanol)/GC/ECD.	552.2, 552.3.			
Bromate				
Ion chromatography	300.1			D 6581–00
Ion chromatography & post column reaction.	317.0 Rev 2.0 [6], 326.0 [6].			
IC/ICP–MS	321.8 [6 7].			
Chlorite				
Amperometric titration		4500–ClO_2 E [8]	4500–ClO_2 E–00 [8].	
Spectrophotometry	327.0 Rev 1.1 [8].			
Ion chromatography	300.0, 300.1, 317.0 Rev 2.0, 326.0.			D 6581–00

[1] P&T = purge and trap; GC = gas chromatography; ElCD = electrolytic conductivity detector; PID = photoionization detector; MS = mass spectrometer; LLE = liquid/liquid extraction; ECD = electron capture detector; SPE = solid phase extraction; IC = ion chromatography; ICP–MS = inductively coupled plasma/mass spectrometer.

[2] 19th and 20th editions of Standard Methods for the Examination of Water and Wastewater, 1995 and 1998, respectively, American Public Health Association; either of these editions may be used.

[3] Annual Book of ASTM Standards, 2001 or any year containing the cited version of the method, Vol 11.01.

[4] If TTHMs are the only analytes being measured in the sample, then a PID is not required.

[5] The samples must be extracted within 14 days of sample collection.

[6] Ion chromatography & post column reaction or IC/ICP-MS must be used for monitoring of bromate for purposes of demonstrating eligibility of reduced monitoring, as prescribed in § 141.132(b)(3)(ii).

[7] Samples must be preserved at the time of sampling with 50 mg ethylenediamine (EDA)/L of sample and must be analyzed within 28 days.

[8] Amperometric titration or spectrophotometry may be used for routine daily monitoring of chlorite at the entrance to the distribution system, as prescribed in § 141.132(b)(2)(i)(A). Ion chromatography must be used for routine monthly monitoring of chlorite and additional monitoring of chlorite in the distribution system, as prescribed in § 141.132(b)(2)(i)(B) and (b)(2)(ii).

[9] The Standard Methods Online version that is approved is indicated by the last two digits in the method number which is the year of approval by the Standard Method Committee. Standard Methods Online are available at *http://www.standardmethods.org.*

(2) Analyses under this section for disinfection byproducts must be conducted by laboratories that have received certification by EPA or the State, except as specified under paragraph (b)(3) of this section. To receive certification to conduct analyses for the DBP contaminants in §§ 141.64, 141.135, and subparts U and V of this part, the laboratory must:

(i) Analyze Performance Evaluation (PE) samples that are acceptable to EPA or the State at least once during each consecutive 12 month period by each method for which the laboratory desires certification.

(ii) Until March 31, 2007, in these analyses of PE samples, the laboratory must achieve quantitative results

within the acceptance limit on a minimum of 80% of the analytes included in each PE sample. The acceptance limit is defined as the 95% confidence interval calculated around the mean of the PE study between a maximum and minimum acceptance limit of ±50% and ±15% of the study mean.

(iii) Beginning April 1, 2007, the laboratory must achieve quantitative results on the PE sample analyses that are within the following acceptance limits:

DBP	Acceptance limits (percent of true value)	Comments
TTHM		
Chloroform	±20	Laboratory must meet all 4 individual THM acceptance limits in order to successfully pass a PE sample for TTHM
Bromodichloromethane	±20	
Dibromochloromethane	±20	
Bromoform	±20	
HAA5		
Monochloroacetic Acid	±40	Laboratory must meet the acceptance limits for 4 out of 5 of the HAA5 compounds in order to successfully pass a PE sample for HAA5
Dichloroacetic Acid	±40	
Trichloroacetic Acid	±40	
Monobromoacetic Acid	±40	
Dibromoacetic Acid	±40	
Chlorite	±30	
Bromate	±30	

(iv) Beginning April 1, 2007, report quantitative data for concentrations at least as low as the ones listed in the following table for all DBP samples analyzed for compliance with §§ 141.64, 141.135, and subparts U and V of this part:

DBP	Minimum reporting level (mg/L) [1]	Comments
TTHM [2]		
Chloroform	0.0010	
Bromodichloromethane	0.0010	
Dibromochloromethane	0.0010	
Bromoform	0.0010	
HAA5 [2]		
Monochloroacetic Acid	0.0020	
Dichloroacetic Acid	0.0010	
Trichloroacetic Acid	0.0010	
Monobromoacetic Acid	0.0010	
Dibromoacetic Acid	0.0010	
Chlorite	0.020	Applicable to monitoring as prescribed in § 141.132(b)(2)(1)(B) and (b)(2)(ii).
Bromate	0.0050 or 0.0010	Laboratories that use EPA Methods 317.0 Revision 2.0, 326.0 or 321.8 must meet a 0.0010 mg/L MRL for bromate.

[1] The calibration curve must encompass the regulatory minimum reporting level (MRL) concentration. Data may be reported for concentrations lower than the regulatory MRL as long as the precision and accuracy criteria are met by analyzing an MRL check standard at the lowest reporting limit chosen by the laboratory. The laboratory must verify the accuracy of the calibration curve at the MRL concentration by analyzing an MRL check standard with a concentration less than or equal to 110% of the MRL with each batch of samples. The measured concentration for the MRL check standard must be ±50% of the expected value, if any field sample in the batch has a concentration less than 5 times the regulatory MRL. Method requirements to analyze higher concentration check standards and meet tighter acceptance criteria for them must be met in addition to the MRL check standard requirement.

[2] When adding the individual trihalomethane or haloacetic acid concentrations to calculate the TTHM or HAA5 concentrations, respectively, a zero is used for any analytical result that is less than the MRL concentration for that DBP, unless otherwise specified by the State.

(3) A party approved by EPA or the State must measure daily chlorite samples at the entrance to the distribution system.

(c) *Disinfectant residuals.* (1) Systems must measure residual disinfectant

concentration for free chlorine, combined chlorine (chloramines), and chlorine dioxide by the methods listed in the following table or one of the alternative methods listed in appendix A to subpart C of this part:

Methodology	SM (19th or 20th ed)	SM Online [2]	ASTM method	EPA method	Residual measured [1]			
					Free Cl_2	Combined Cl_2	Total Cl_2	ClO_2
Amperometric Titration	4500–Cl D	4500–Cl D–00	D 1253–86 (96), 03		X	X	X	
Low Level Amperometric Titration.	4500–Cl E	4500–Cl E–00					X	
DPD Ferrous Titrimetric	4500–Cl F	4500–Cl F–00			X	X	X	
DPD Colorimetric	4500–Cl G	4500–Cl G–00			X	X	X	
Syringaldazine (FACTS)	4500–Cl H	4500–Cl H–00			X			
Iodometric Electrode	4500–Cl I	4500–Cl I–00					X	
DPD	4500–ClO_2 D							X
Amperometric Method II	4500–ClO_2 E	4500–ClO_2 E–00						X
Lissamine Green Spectrophotometric.				327.0 Rev 1.1				X

[1] X indicates method is approved for measuring specified disinfectant residual. Free chlorine or total chlorine may be measured for demonstrating compliance with the chlorine MRDL and combined chlorine, or total chlorine may be measured for demonstrating compliance with the chloramine MRDL.

[2] The Standard Methods Online version that is approved is indicated by the last two digits in the method number which is the year of approval by the Standard Method Committee. Standard Methods Online are available at *http://www.standardmethods.org.*

(2) If approved by the State, systems may also measure residual disinfectant concentrations for chlorine, chloramines, and chlorine dioxide by using DPD colorimetric test kits.

(3) A party approved by EPA or the State must measure residual disinfectant concentration.

(d) *Additional analytical methods.* Systems required to analyze parameters not included in paragraphs (b) and (c) of this section must use the following methods or one of the alternative methods listed in appendix A to subpart C of this part. A party approved by EPA or the State must measure these parameters.

(1) *Alkalinity.* All methods allowed in § 141.89(a) for measuring alkalinity.

(2) *Bromide.* EPA Methods 300.0, 300.1, 317.0 Revision 2.0, 326.0, or ASTM D 6581–00.

(3) *Total Organic Carbon (TOC).* Standard Method 5310 B or 5310 B–00 (High-Temperature Combustion Method) or Standard Method 5310 C or 5310 C–00 (Persulfate-Ultraviolet or Heated-Persulfate Oxidation Method) or Standard Method 5310 D or 5310 D–00 (Wet-Oxidation Method) or EPA Method 415.3 Revision 1.1. Inorganic carbon must be removed from the samples prior to analysis. TOC samples may not be filtered prior to analysis. TOC samples must be acidified at the time of sample collection to achieve pH less than or equal to 2 with minimal addition of the acid specified in the method or by the instrument manufacturer. Acidified TOC samples must be analyzed within 28 days.

(4) *Specific Ultraviolet Absorbance (SUVA).* SUVA is equal to the UV absorption at 254nm (UV_{254}) (measured in m^{-1} divided by the dissolved organic carbon (DOC) concentration (measured as mg/L). In order to determine SUVA, it is necessary to separately measure UV_{254} and DOC. When determining SUVA, systems must use the methods stipulated in paragraph (d)(4)(i) of this section to measure DOC and the method stipulated in paragraph (d)(4)(ii) of this section to measure UV_{254}. SUVA must be determined on water prior to the addition of disinfectants/oxidants by the system. DOC and UV_{254} samples used to determine a SUVA value must be taken at the same time and at the same location.

(i) *Dissolved Organic Carbon (DOC).* Standard Method 5310 B or 5310 B–00 (High-Temperature Combustion Method) or Standard Method 5310 C or 5310 C–00 (Persulfate-Ultraviolet or Heated-Persulfate Oxidation Method) or Standard Method 5310 D or 5310 D–00 (Wet-Oxidation Method) or EPA Method 415.3

Revision 1.1. DOC samples must be filtered through the 0.45 μm pore-diameter filter as soon as practical after sampling, not to exceed 48 hours. After filtration, DOC samples must be acidified to achieve pH less than or equal to 2 with minimal addition of the acid specified in the method or by the instrument manufacturer. Acidified DOC samples must be analyzed within 28 days of sample collection. Inorganic carbon must be removed from the samples prior to analysis. Water passed through the filter prior to filtration of the sample must serve as the filtered blank. This filtered blank must be analyzed using procedures identical to those used for analysis of the samples and must meet the following criteria: DOC <0.5 mg/L.

(ii) Ultraviolet Absorption at 254 nm (UV_{254}). Standard Method 5910 B or 5910 B–00 (Ultraviolet Absorption Method) or EPA Method 415.3 Revision 1.1. UV absorption must be measured at 253.7 nm (may be rounded off to 254 nm). Prior to analysis, UV_{254} samples must be filtered through a 0.45 μm pore-diameter filter. The pH of UV_{254} samples may not be adjusted. Samples must be analyzed as soon as practical after sampling, not to exceed 48 hours.

(5) *pH*. All methods allowed in § 141.23(k)(1) for measuring pH.

(6) *Magnesium*. All methods allowed in § 141.23(k)(1) for measuring magnesium.

[63 FR 69466, Dec. 16, 1998, as amended at 66 FR 3776, Jan. 16, 2001; 71 FR 479, Jan. 4, 2006; 71 FR 37168, June 29, 2006; 74 FR 30958, June 29, 2009]

§ 141.132 Monitoring requirements.

(a) *General requirements*. (1) Systems must take all samples during normal operating conditions.

(2) Systems may consider multiple wells drawing water from a single aquifer as one treatment plant for determining the minimum number of TTHM and HAA5 samples required, with State approval in accordance with criteria developed under § 142.16(h)(5) of this chapter.

(3) Failure to monitor in accordance with the monitoring plan required under paragraph (f) of this section is a monitoring violation.

(4) Failure to monitor will be treated as a violation for the entire period covered by the annual average where compliance is based on a running annual average of monthly or quarterly samples or averages and the system's failure to monitor makes it impossible to determine compliance with MCLs or MRDLs.

(5) Systems may use only data collected under the provisions of this subpart to qualify for reduced monitoring.

(b) *Monitoring requirements for disinfection byproducts*—(1) *TTHMs and HAA5*—(i) *Routine monitoring*. Systems must monitor at the frequency indicated in the following table:

ROUTINE MONITORING FREQUENCY FOR TTHM AND HAA5

Type of system	Minimum monitoring frequency	Sample location in the distribution system
Subpart H system serving at least 10,000 persons.	Four water samples per quarter per treatment plant.	At least 25 percent of all samples collected each quarter at locations representing maximum residence time. Remaining samples taken at locations representative of at least average residence time in the distribution system and representing the entire distribution system, taking into account number of persons served, different sources of water, and different treatment methods. [1]
Subpart H system serving from 500 to 9,999 persons.	One water sample per quarter per treatment plant.	Locations representing maximum residence time. [1]
Subpart H system serving fewer than 500 persons.	One sample per year per treatment plant during month of warmest water temperature.	Locations representing maximum residence time. [1] If the sample (or average of annual samples, if more than one sample is taken) exceeds the MCL, the system must increase monitoring to one sample per treatment plant per quarter, taken at a point reflecting the maximum residence time in the distribution system, until the system meets criteria in paragraph (b)(1)(iv) of this section.

ROUTINE MONITORING FREQUENCY FOR TTHM AND HAA5—Continued

Type of system	Minimum monitoring frequency	Sample location in the distribution system
System using only ground water not under direct influence of surface water using chemical disinfectant and serving at least 10,000 persons.	One water sample per quarter per treatment plant [2].	Locations representing maximum residence time. [1]
System using only ground water not under direct influence of surface water using chemical disinfectant and serving fewer than 10,000 persons.	One sample per year per treatment plant [2] during month of warmest water temperature.	Locations representing maximum residence time. [1] If the sample (or average of annual samples, if more than one sample is taken) exceeds the MCL, the system must increase monitoring to one sample per treatment plant per quarter, taken at a point reflecting the maximum residence time in the distribution system, until the system meets criteria in paragraph (b)(1)(iv) of this section.

[1] If a system elects to sample more frequently than the minimum required, at least 25 percent of all samples collected each quarter (including those taken in excess of the required frequency) must be taken at locations that represent the maximum residence time of the water in the distribution system. The remaining samples must be taken at locations representative of at least average residence time in the distribution system.

[2] Multiple wells drawing water from a single aquifer may be considered one treatment plant for determining the minimum number of samples required, with State approval in accordance with criteria developed under § 142.16(h)(5) of this chapter.

(ii) Systems may reduce monitoring, except as otherwise provided, in accordance with the following table:

REDUCED MONITORING FREQUENCY FOR TTHM AND HAA5

If you are a . . .	You may reduce monitoring if you have monitored at least one year and your . . .	To this level
Subpart H system serving at least 10,000 persons which has a source water annual average TOC level, before any treatment, ≤4.0 mg/L.	TTHM annual average ≤0.040 mg/L and HAA5 annual average ≤0.030 mg/L.	One sample per treatment plant per quarter at distribution system location reflecting maximum residence time.
Subpart H system serving from 500 to 9,999 persons which has a source water annual average TOC level, before any treatment, ≤4.0 mg/L.	TTHM annual average ≤0.040 mg/L and HAA5 annual average ≤0.030 mg/L.	One sample per treatment plant per year at distribution system location reflecting maximum residence time during month of warmest water temperature. NOTE: Any Subpart H system serving fewer than 500 persons may not reduce its monitoring to less than one sample per treatment plant per year.
System using only ground water not under direct influence of surface water using chemical disinfectant and serving at least 10,000 persons.	TTHM annual average ≤0.040 mg/L and HAA5 annual average ≤0.030 mg/L.	One sample per treatment plant per year at distribution system location reflecting maximum residence time during month of warmest water temperature
System using only ground water not under direct influence of surface water using chemical disinfectant and serving fewer than 10,000 persons.	TTHM annual average ≤0.040 mg/L and HAA5 annual average ≤0.030 mg/L for two consecutive years OR TTHM annual average ≤0.020 mg/L and HAA5 annual average ≤0.015 mg/L for one year.	One sample per treatment plant per three year monitoring cycle at distribution system location reflecting maximum residence time during month of warmest water temperature, with the three-year cycle beginning on January 1 following quarter in which system qualifies for reduced monitoring.

(iii) *Monitoring requirements for source water TOC*. In order to qualify for reduced monitoring for TTHM and HAA5 under paragraph (b)(1)(ii) of this section, subpart H systems not monitoring under the provisions of paragraph (d) of this section must take monthly TOC samples every 30 days at a location prior to any treatment, beginning April 1, 2008 or earlier, if specified by the State. In addition to meeting other criteria for reduced monitoring in paragraph (b)(1)(ii) of this section, the source water TOC running annual average must be ≤4.0 mg/L (based on the most recent four quarters of monitoring) on a continuing basis at each treatment plant to reduce or remain on reduced monitoring for TTHM and HAA5. Once qualified for reduced monitoring for TTHM and HAA5 under paragraph (b)(1)(ii) of this section, a

system may reduce source water TOC monitoring to quarterly TOC samples taken every 90 days at a location prior to any treatment.

(iv) Systems on a reduced monitoring schedule may remain on that reduced schedule as long as the average of all samples taken in the year (for systems which must monitor quarterly) or the result of the sample (for systems which must monitor no more frequently than annually) is no more than 0.060 mg/L and 0.045 mg/L for TTHMs and HAA5, respectively. Systems that do not meet these levels must resume monitoring at the frequency identified in paragraph (b)(1)(i) of this section (minimum monitoring frequency column) in the quarter immediately following the monitoring period in which the system exceeds 0.060 mg/L or 0.045 mg/L for TTHMs and HAA5, respectively. For systems using only ground water not under the direct influence of surface water and serving fewer than 10,000 persons, if either the TTHM annual average is >0.080 mg/L or the HAA5 annual average is >0.060 mg/L, the system must go to the increased monitoring identified in paragraph (b)(1)(i) of this section (sample location column) in the quarter immediately following the monitoring period in which the system exceeds 0.080 mg/L or 0.060 mg/L for TTHMs or HAA5 respectively.

(v) Systems on increased monitoring may return to routine monitoring if, after at least one year of monitoring their TTHM annual average is ≤0.060 mg/L and their HAA5 annual average is ≤0.045 mg/L.

(vi) The State may return a system to routine monitoring at the State's discretion.

(2) *Chlorite.* Community and nontransient noncommunity water systems using chlorine dioxide, for disinfection or oxidation, must conduct monitoring for chlorite.

(i) *Routine monitoring.* (A) *Daily monitoring.* Systems must take daily samples at the entrance to the distribution system. For any daily sample that exceeds the chlorite MCL, the system must take additional samples in the distribution system the following day at the locations required by paragraph (b)(2)(ii) of this section, in addition to the sample required at the entrance to the distribution system.

(B) *Monthly monitoring.* Systems must take a three-sample set each month in the distribution system. The system must take one sample at each of the following locations: near the first customer, at a location representative of average residence time, and at a location reflecting maximum residence time in the distribution system. Any additional routine sampling must be conducted in the same manner (as three-sample sets, at the specified locations). The system may use the results of additional monitoring conducted under paragraph (b)(2)(ii) of this section to meet the requirement for monitoring in this paragraph.

(ii) *Additional monitoring.* On each day following a routine sample monitoring result that exceeds the chlorite MCL at the entrance to the distribution system, the system is required to take three chlorite distribution system samples at the following locations: as close to the first customer as possible, in a location representative of average residence time, and as close to the end of the distribution system as possible (reflecting maximum residence time in the distribution system).

(iii) *Reduced monitoring.* (A) Chlorite monitoring at the entrance to the distribution system required by paragraph (b)(2)(i)(A) of this section may not be reduced.

(B) Chlorite monitoring in the distribution system required by paragraph (b)(2)(i)(B) of this section may be reduced to one three-sample set per quarter after one year of monitoring where no individual chlorite sample taken in the distribution system under paragraph (b)(2)(i)(B) of this section has exceeded the chlorite MCL and the system has not been required to conduct monitoring under paragraph (b)(2)(ii) of this section. The system may remain on the reduced monitoring schedule until either any of the three individual chlorite samples taken quarterly in the distribution system under paragraph (b)(2)(i)(B) of this section exceeds the chlorite MCL or the system is required to conduct monitoring under paragraph (b)(2)(ii) of this section, at which time the system must revert to routine monitoring.

(3) *Bromate*—(i) *Routine monitoring.* Community and nontransient noncommunity systems using ozone, for disinfection or oxidation, must take one sample per month for each treatment plant in the system using ozone. Systems must take samples monthly at the entrance to the distribution system while the ozonation system is operating under normal conditions.

(ii) *Reduced monitoring.* (A) Until March 31, 2009, systems required to analyze for bromate may reduce monitoring from monthly to quarterly, if the system's average source water bromide concentration is less than 0.05 mg/L based on representative monthly bromide measurements for one year. The system may remain on reduced bromate monitoring until the running annual average source water bromide concentration, computed quarterly, is equal to or greater than 0.05 mg/L based on representative monthly measurements. If the running annual average source water bromide concentration is ≥0.05 mg/L, the system must resume routine monitoring required by paragraph (b)(3)(i) of this section in the following month.

(B) Beginning April 1, 2009, systems may no longer use the provisions of paragraph (b)(3)(ii)(A) of this section to qualify for reduced monitoring. A system required to analyze for bromate may reduce monitoring from monthly to quarterly, if the system's running annual average bromate concentration is ≤0.0025 mg/L based on monthly bromate measurements under paragraph (b)(3)(i) of this section for the most recent four quarters, with samples analyzed using Method 317.0 Revision 2.0, 326.0 or 321.8. If a system has qualified for reduced bromate monitoring under paragraph (b)(3)(ii)(A) of this section, that system may remain on reduced monitoring as long as the running annual average of quarterly bromate samples ≤0.0025 mg/L based on samples analyzed using Method 317.0 Revision 2.0, 326.0, or 321.8. If the running annual average bromate concentration is >0.0025 mg/L, the system must resume routine monitoring required by paragraph (b)(3)(i) of this section.

(c) *Monitoring requirements for disinfectant residuals*—(1) *Chlorine and chloramines*—(i) *Routine monitoring.* Until March 31, 2016, community and non-transient non-community water systems that use chlorine or chloramines must measure the residual disinfectant level in the distribution system at the same point in the distribution system and at the same time as total coliforms are sampled, as specified in § 141.21. Beginning April 1, 2016, community and non-transient noncommunity water systems that use chlorine or chloramines must measure the residual disinfectant level in the distribution system at the same point in the distribution system and at the same time as total coliforms are sampled, as specified in §§ 141.854 through 141.858. Subpart H systems of this part may use the results of residual disinfectant concentration sampling conducted under § 141.74(b)(6)(i) for unfiltered systems or § 141.74(c)(3)(i) for systems which filter, in lieu of taking separate samples.

(ii) *Reduced monitoring.* Monitoring may not be reduced.

(2) *Chlorine dioxide*—(i) *Routine monitoring.* Community, nontransient noncommunity, and transient noncommunity water systems that use chlorine dioxide for disinfection or oxidation must take daily samples at the entrance to the distribution system. For any daily sample that exceeds the MRDL, the system must take samples in the distribution system the following day at the locations required by paragraph (c)(2)(ii) of this section, in addition to the sample required at the entrance to the distribution system.

(ii) *Additional monitoring.* On each day following a routine sample monitoring result that exceeds the MRDL, the system is required to take three chlorine dioxide distribution system samples. If chlorine dioxide or chloramines are used to maintain a disinfectant residual in the distribution system, or if chlorine is used to maintain a disinfectant residual in the distribution system and there are no disinfection addition points after the entrance to the distribution system (*i.e.*, no booster chlorination), the system must take three samples as close to the first customer as possible, at intervals of at least six hours. If chlorine is used to maintain a disinfectant residual in the distribution system and there are one

or more disinfection addition points after the entrance to the distribution system (*i.e.*, booster chlorination), the system must take one sample at each of the following locations: as close to the first customer as possible, in a location representative of average residence time, and as close to the end of the distribution system as possible (reflecting maximum residence time in the distribution system).

(iii) *Reduced monitoring*. Chlorine dioxide monitoring may not be reduced.

(d) *Monitoring requirements for disinfection byproduct precursors (DBPP)*—(1) *Routine monitoring*. Subpart H systems which use conventional filtration treatment (as defined in § 141.2) must monitor each treatment plant for TOC no later than the point of combined filter effluent turbidity monitoring and representative of the treated water. All systems required to monitor under this paragraph (d)(1) must also monitor for TOC in the source water prior to any treatment at the same time as monitoring for TOC in the treated water. These samples (source water and treated water) are referred to as paired samples. At the same time as the source water sample is taken, all systems must monitor for alkalinity in the source water prior to any treatment. Systems must take one paired sample and one source water alkalinity sample per month per plant at a time representative of normal operating conditions and influent water quality.

(2) *Reduced monitoring*. Subpart H systems with an average treated water TOC of less than 2.0 mg/L for two consecutive years, or less than 1.0 mg/L for one year, may reduce monitoring for both TOC and alkalinity to one paired sample and one source water alkalinity sample per plant per quarter. The system must revert to routine monitoring in the month following the quarter when the annual average treated water TOC ≥2.0 mg/L.

(e) *Bromide*. Systems required to analyze for bromate may reduce bromate monitoring from monthly to once per quarter, if the system demonstrates that the average source water bromide concentration is less than 0.05 mg/L based upon representative monthly measurements for one year. The system must continue bromide monitoring to remain on reduced bromate monitoring.

(f) *Monitoring plans*. Each system required to monitor under this subpart must develop and implement a monitoring plan. The system must maintain the plan and make it available for inspection by the State and the general public no later than 30 days following the applicable compliance dates in § 141.130(b). All Subpart H systems serving more than 3300 people must submit a copy of the monitoring plan to the State no later than the date of the first report required under § 141.134. The State may also require the plan to be submitted by any other system. After review, the State may require changes in any plan elements. The plan must include at least the following elements.

(1) Specific locations and schedules for collecting samples for any parameters included in this subpart.

(2) How the system will calculate compliance with MCLs, MRDLs, and treatment techniques.

(3) If approved for monitoring as a consecutive system, or if providing water to a consecutive system, under the provisions of § 141.29, the sampling plan must reflect the entire distribution system.

[63 FR 69466, Dec. 16, 1998, as amended at 66 FR 3776, Jan. 16, 2001; 69 FR 38856, June 29, 2004; 71 FR 482, Jan. 4, 2006; 78 FR 10348, Feb. 13, 2013]

§ 141.133 Compliance requirements.

(a) *General requirements*. (1) Where compliance is based on a running annual average of monthly or quarterly samples or averages and the system fails to monitor for TTHM, HAA5, or bromate, this failure to monitor will be treated as a monitoring violation for the entire period covered by the annual average. Where compliance is based on a running annual average of monthly or quarterly samples or averages and the system failure to monitor makes it impossible to determine compliance with MRDLs for chlorine and chloramines, this failure to monitor will be treated as a monitoring violation for the entire period covered by the annual average.

(2) All samples taken and analyzed under the provisions of this subpart

must be included in determining compliance, even if that number is greater than the minimum required.

(3) If, during the first year of monitoring under §141.132, any individual quarter's average will cause the running annual average of that system to exceed the MCL for total trihalomethanes, haloacetic acids (five), or bromate; or the MRDL for chlorine or chloramine, the system is out of compliance at the end of that quarter.

(b) *Disinfection byproducts*—(1) *TTHMs and HAA5*. (i) For systems monitoring quarterly, compliance with MCLs in §141.64 must be based on a running annual arithmetic average, computed quarterly, of quarterly arithmetic averages of all samples collected by the system as prescribed by §141.132(b)(1).

(ii) For systems monitoring less frequently than quarterly, systems demonstrate MCL compliance if the average of samples taken that year under the provisions of §141.132(b)(1) does not exceed the MCLs in §141.64. If the average of these samples exceeds the MCL, the system must increase monitoring to once per quarter per treatment plant and such a system is not in violation of the MCL until it has completed one year of quarterly monitoring, unless the result of fewer than four quarters of monitoring will cause the running annual average to exceed the MCL, in which case the system is in violation at the end of that quarter. Systems required to increase monitoring frequency to quarterly monitoring must calculate compliance by including the sample which triggered the increased monitoring plus the following three quarters of monitoring.

(iii) If the running annual arithmetic average of quarterly averages covering any consecutive four-quarter period exceeds the MCL, the system is in violation of the MCL and must notify the public pursuant to §141.32 or §141.202, whichever is effective for your system, in addition to reporting to the State pursuant to §141.134.

(iv) If a PWS fails to complete four consecutive quarters of monitoring, compliance with the MCL for the last four-quarter compliance period must be based on an average of the available data.

(2) *Bromate*. Compliance must be based on a running annual arithmetic average, computed quarterly, of monthly samples (or, for months in which the system takes more than one sample, the average f all samples taken during the month) collected by the system as prescribed by §141.132(b)(3). If the average of samples covering any consecutive four-quarter period exceeds the MCL, the system is in violation of the MCL and must notify the public pursuant to subpart Q, in addition to reporting to the State pursuant to §141.134. If a PWS fails to complete 12 consecutive months' monitoring, compliance with the MCL for the last four-quarter compliance period must be based on an average of the available data.

(3) *Chlorite*. Compliance must be based on an arithmetic average of each three sample set taken in the distribution system as prescribed by §141.132(b)(2)(i)(B) and §141.132(b)(2)(ii). If the arithmetic average of any three sample set exceeds the MCL, the system is in violation of the MCL and must notify the public pursuant to subpart Q, in addition to reporting to the State pursuant to §141.134.

(c) *Disinfectant residuals*—(1) *Chlorine and chloramines*. (i) Compliance must be based on a running annual arithmetic average, computed quarterly, of monthly averages of all samples collected by the system under §141.132(c)(1). If the average covering any consecutive four-quarter period exceeds the MRDL, the system is in violation of the MRDL and must notify the public pursuant to subpart Q, in addition to reporting to the State pursuant to §141.134.

(ii) In cases where systems switch between the use of chlorine and chloramines for residual disinfection during the year, compliance must be determined by including together all monitoring results of both chlorine and chloramines in calculating compliance. Reports submitted pursuant to §141.134 must clearly indicate which residual disinfectant was analyzed for each sample.

(2) *Chlorine dioxide*. (i) *Acute violations*. Compliance must be based on consecutive daily samples collected by the system under §141.132(c)(2). If any

daily sample taken at the entrance to the distribution system exceeds the MRDL, and on the following day one (or more) of the three samples taken in the distribution system exceed the MRDL, the system is in violation of the MRDL and must take immediate corrective action to lower the level of chlorine dioxide below the MRDL and must notify the public pursuant to the procedures for acute health risks in subpart Q in addition to reporting to the State pursuant to § 141.134. Failure to take samples in the distribution system the day following an exceedance of the chlorine dioxide MRDL at the entrance to the distribution system will also be considered an MRDL violation and the system must notify the public of the violation in accordance with the provisions for acute violations under subpart Q in addition to reporting to the State pursuant to § 141.134.

(ii) *Nonacute violations.* Compliance must be based on consecutive daily samples collected by the system under § 141.132(c)(2). If any two consecutive daily samples taken at the entrance to the distribution system exceed the MRDL and all distribution system samples taken are below the MRDL, the system is in violation of the MRDL and must take corrective action to lower the level of chlorine dioxide below the MRDL at the point of sampling and will notify the public pursuant to the procedures for nonacute health risks in subpart Q in addition to reporting to the State pursuant to § 141.134. Failure to monitor at the entrance to the distribution system the day following an exceedance of the chlorine dioxide MRDL at the entrance to the distribution system is also an MRDL violation and the system must notify the public of the violation in accordance with the provisions for nonacute violations under § 141.32(e)(78) in addition to reporting to the State pursuant to § 141.134.

(d) *Disinfection byproduct precursors (DBPP).* Compliance must be determined as specified by § 141.135(c). Systems may begin monitoring to determine whether Step 1 TOC removals can be met 12 months prior to the compliance date for the system. This monitoring is not required and failure to monitor during this period is not a violation. However, any system that does not monitor during this period, and then determines in the first 12 months after the compliance date that it is not able to meet the Step 1 requirements in § 141.135(b)(2) and must therefore apply for alternate minimum TOC removal (Step 2) requirements, is not eligible for retroactive approval of alternate minimum TOC removal (Step 2) requirements as allowed pursuant to § 141.135(b)(3) and is in violation. Systems may apply for alternate minimum TOC removal (Step 2) requirements any time after the compliance date. For systems required to meet Step 1 TOC removals, if the value calculated under § 141.135(c)(1)(iv) is less than 1.00, the system is in violation of the treatment technique requirements and must notify the public pursuant to subpart Q of this part, in addition to reporting to the State pursuant to § 141.134.

[63 FR 69466, Dec. 16, 1998, as amended at 65 FR 26022, May 4, 2000; 65 FR 40521, June 30, 2000; 66 FR 3777, Jan. 16, 2001; 69 FR 38856, June 29, 2004; 71 FR 482, Jan. 4, 2006]

§ 141.134 Reporting and recordkeeping requirements.

(a) Systems required to sample quarterly or more frequently must report to the State within 10 days after the end of each quarter in which samples were collected, notwithstanding the provisions of § 141.31. Systems required to sample less frequently than quarterly must report to the State within 10 days after the end of each monitoring period in which samples were collected.

(b) *Disinfection byproducts.* Systems must report the information specified in the following table:

If you are a * * *	You must report * * *
(1) System monitoring for TTHMs and HAA5 under the requirements of § 141.132(b) on a quarterly or more frequent basis.	(i) The number of samples taken during the last quarter. (ii) The location, date, and result of each sample taken during the last quarter. (iii) The arithmetic average of all samples taken in the last quarter. (iv) The annual arithmetic average of the quarterly arithmetic averages of this section for the last four quarters. (v) Whether, based on § 141.133(b)(1), the MCL was violated.
(2) System monitoring for TTHMs and HAA5 under the requirements of § 141.132(b) less frequently than quarterly (but as least annually).	(i) The number of samples taken during the last year. (ii) The location, date, and result of each sample taken during the last monitoring period. (iii) The arithmetic average of all samples taken over the last year. (iv) Whether, based on § 141.133(b)(1), the MCL was violated.
(3) System monitoring for TTHMs and HAA5 under the requriements of § 141.132(b) less frequently than annually.	(i) The location, date, and result of each sample taken (ii) Whether, based on § 141.133(b)(1), the MCL was violated.
(4) System monitoring for chlorite under the requirements of § 141.132(b).	(i) The number of entry point samples taken each month for the last 3 months. (ii) The location, date, and result of each sample (both entry point and distribution system) taken during the last quarter. (iii) For each month in the reporting period, the arithmetic average of all samples taken in each three samples set taken in the distribution system. (iv) Whether, based on § 141.133(b)(3), the MCL was violated, in which month, and how many times it was violated each month.
(5) System monitoring for bromate under the requirements of § 141.132(b).	(i)The number of samples taken during the last quarter. (ii)The location, date, and result of each sample taken during the last quarter. (iii) The arithmetic average of the monthly arithmetic averages of all samples taken in the last year. (iv) Whether, based on § 141.133(b)(2), the MCL was violated.

[1] The State may choose to perform calculations and determine whether the MCL was exceeded, in lieu of having the system report that information

(c) *Disinfectants*. Systems must report the information specified in the following table:

If you are a * * *	You must report * * *
(1) System monitoring for chlorine or chloramines under the requirements of § 141.132(c).	(i) The number of samples taken during each month of the last quarter. (ii) The month arithmetic average of all samples taken in each month for the last 12 months. (iii) The arithmetic average of the monthly averages for the last 12 months. (iv) Whether, based on § 141.133(c)(1), the MRD was violated.
(2) System monitoring for chlorine dioxide under the requirements of § 141.132(c).	(i) The dates, result, and locations of samples taken during the last quarter. (ii) Whether, based on § 141.133(c)(2), the MRDL was violated. (iii) Whether the MRDL was exceeded in any two consecutive daily samples and whether the resulting violation was acuate or nonacute.

[1] The State may choose to perform calculations and determine whether the MRDL was exceeded, in lieu of having the system report that information.

(d) *Disinfection byproduct precursors and enhanced coagulation or enhanced softening*. Systems must report the information specified in the following table:

If you are a. . .	You must report. . .[1]
(1) System monitoring monthly or quarterly for TOC under the requirements of § 141.132(d) and required to meet the enhanced coagulation or enhanced softening requirements in § 141.135(b)(2) or (3).	(i) The number of paired (source water and treated water) samples taken during the last quarter. (ii) The location, date, and results of each paired sample and associated alkalinity taken during the last quarter. (iii) For each month in the reporting period that paired samples were taken, the arithmetic average of the percent reduction of TOC for each paired sample and the required TOC percent removal. (iv) Calculations for determining compliance with the TOC percent removal requirements, as provided in § 141.135(c)(1). (v) Whether the system is in compliance with the enhanced coagulation or enhanced softening percent removal requirements in § 141.135(b) for the last four quarters.
(2) System monitoring monthly or quarterly for TOC under the requirements of § 141.132(d) and meeting one or more of the alternative compliance criteria in § 141.135(a)(2) or (3).	(i) The alternative compliance criterion that the system is using. (ii) The number of paired samples taken during the last quarter. (iii) The location, date, and result of each paired sample and associated alkalinity taken during the last quarter. (iv) The running annual arithmetic average based on monthly averages (or quarterly samples) of source water TOC for systems meeting a criterion in §§ 141.135(a)(2)(i) or (iii) or of treated water TOC for systems meeting the criterion in § 141.135(a)(2)(ii). (v) The running annual arithmetic average based on monthly averages (or quarterly samples) of source water SUVA for systems meeting the criterion in § 141.135(a)(2)(v) or of treated water SUVA for systems meeting the criterion in § 141.135(a)(2)(vi). (vi) The running annual average of source water alkalinity for systems meeting the criterion in § 141.135(a)(2)(iii) and of treated water alkalinity for systems meeting the criterion in § 141.135(a)(3)(i). (vii) The running annual average for both TTHM and HAA5 for systems meeting the criterion in § 141.135(a)(2)(iii) or (iv). (viii) The running annual average of the amount of magnesium hardness removal (as $CaCO_3$, in mg/L) for systems meeting the criterion in § 141.135(a)(3)(ii). (ix) Whether the system is in compliance with the particular alternative compliance criterion in § 141.135(a)(2) or (3).

[1] The State may choose to perform calculations and determine whether the treatment technique was met, in lieu of having the system report that information.

[63 FR 69466, Dec. 16, 1998, as amended at 66 FR 3778, Jan. 16, 2001; 66 FR 9903, Feb. 12, 2001]

§ 141.135 Treatment technique for control of disinfection byproduct (DBP) precursors.

(a) *Applicability*. (1) Subpart H systems using conventional filtration treatment (as defined in § 141.2) must operate with enhanced coagulation or enhanced softening to achieve the TOC percent removal levels specified in paragraph (b) of this section unless the system meets at least one of the alternative compliance criteria listed in paragraph (a)(2) or (a)(3) of this section.

(2) *Alternative compliance criteria for enhanced coagulation and enhanced softening systems*. Subpart H systems using conventional filtration treatment may use the alternative compliance criteria in paragraphs (a)(2)(i) through (vi) of this section to comply with this section in lieu of complying with paragraph (b) of this section. Systems must still comply with monitoring requirements in § 141.132(d).

(i) The system's source water TOC level, measured according to § 141.131(d)(3), is less than 2.0 mg/L, calculated quarterly as a running annual average.

(ii) The system's treated water TOC level, measured according to § 141.131(d)(3), is less than 2.0 mg/L, calculated quarterly as a running annual average.

(iii) The system's source water TOC level, measured according to § 141.131(d)(3), is less than 4.0 mg/L, calculated quarterly as a running annual

average; the source water alkalinity, measured according to § 141.131(d)(1), is greater than 60 mg/L (as $CaCO_3$), calculated quarterly as a running annual average; and either the TTHM and HAA5 running annual averages are no greater than 0.040 mg/L and 0.030 mg/L, respectively; or prior to the effective date for compliance in § 141.130(b), the system has made a clear and irrevocable financial commitment not later than the effective date for compliance in § 141.130(b) to use of technologies that will limit the levels of TTHMs and HAA5 to no more than 0.040 mg/L and 0.030 mg/L, respectively. Systems must submit evidence of a clear and irrevocable financial commitment, in addition to a schedule containing milestones and periodic progress reports for installation and operation of appropriate technologies, to the State for approval not later than the effective date for compliance in § 141.130(b). These technologies must be installed and operating not later than June 30, 2005. Failure to install and operate these technologies by the date in the approved schedule will constitute a violation of National Primary Drinking Water Regulations.

(iv) The TTHM and HAA5 running annual averages are no greater than 0.040 mg/L and 0.030 mg/L, respectively, and the system uses only chlorine for primary disinfection and maintenance of a residual in the distribution system.

(v) The system's source water SUVA, prior to any treatment and measured monthly according to § 141.131(d)(4), is less than or equal to 2.0 L/mg-m, calculated quarterly as a running annual average.

(vi) The system's finished water SUVA, measured monthly according to § 141.131(d)(4), is less than or equal to 2.0 L/mg-m, calculated quarterly as a running annual average.

(3) *Additional alternative compliance criteria for softening systems.* Systems practicing enhanced softening that cannot achieve the TOC removals required by paragraph (b)(2) of this section may use the alternative compliance criteria in paragraphs (a)(3)(i) and (ii) of this section in lieu of complying with paragraph (b) of this section. Systems must still comply with monitoring requirements in § 141.132(d).

(i) Softening that results in lowering the treated water alkalinity to less than 60 mg/L (as $CaCO_3$), measured monthly according to § 141.131(d)(1) and calculated quarterly as a running annual average.

(ii) Softening that results in removing at least 10 mg/L of magnesium hardness (as $CaCO_3$), measured monthly according to § 141.131(d)(6) and calculated quarterly as a running annual average.

(b) *Enhanced coagulation and enhanced softening performance requirements.* (1) Systems must achieve the percent reduction of TOC specified in paragraph (b)(2) of this section between the source water and the combined filter effluent, unless the State approves a system's request for alternate minimum TOC removal (Step 2) requirements under paragraph (b)(3) of this section.

(2) Required Step 1 TOC reductions, indicated in the following table, are based upon specified source water parameters measured in accordance with § 141.131(d). Systems practicing softening are required to meet the Step 1 TOC reductions in the far-right column (Source water alkalinity >120 mg/L) for the specified source water TOC:

STEP 1 REQUIRED REMOVAL OF TOC BY ENHANCED COAGULATION AND ENHANCED SOFTENING FOR SUBPART H SYSTEMS USING CONVENTIONAL TREATMENT [1] [2]

Source-water TOC, mg/L	Source-water alkalinity, mg/L as $CaCO_3$ (in precentages)		
	0–60	>60–120	>120 [3]
>2.0–4.0	35.0	25.0	15.0
>4.0–8.0	45.0	35.0	25.0
>8.0.	50.0	40.0	30.0

[1] Systems meeting at least one of the conditions in paragraph (a)(2)(i)–(vi) of this section are not required to operate with enhanced coagulation.

[2] Softening system meeting one of the alternative compliance criteria in paragraph (a)(3) of this section are not required to operate with enhanced softening.

[3] System practicing softening must meet the TOC removal requirements in this column.

(3) Subpart H conventional treatment systems that cannot achieve the Step 1 TOC removals required by paragraph (b)(2) of this section due to water quality parameters or operational constraints must apply to the State, within three months of failure to achieve the TOC removals required by paragraph (b)(2) of this section, for approval of alternative minimum TOC (Step 2) removal requirements submitted by the system. If the State approves the alternative minimum TOC removal (Step 2) requirements, the State may make those requirements retroactive for the purposes of determining compliance. Until the State approves the alternate minimum TOC removal (Step 2) requirements, the system must meet the Step 1 TOC removals contained in paragraph (b)(2) of this section.

(4) *Alternate minimum TOC removal (Step 2) requirements.* Applications made to the State by enhanced coagulation systems for approval of alternate minimum TOC removal (Step 2) requirements under paragraph (b)(3) of this section must include, at a minimum, results of bench- or pilot-scale testing conducted under paragraph (b)(4)(i) of this section. The submitted bench- or pilot-scale testing must be used to determine the alternate enhanced coagulation level.

(i) *Alternate enhanced coagulation level is defined as* coagulation at a coagulant dose and pH as determined by the method described in paragraphs (b)(4)(i) through (v) of this section such that an incremental addition of 10 mg/L of alum (or equivalent amount of ferric salt) results in a TOC removal of ≤0.3 mg/L. The percent removal of TOC at this point on the ''TOC removal versus coagulant dose'' curve is then defined as the minimum TOC removal required for the system. Once approved by the State, this minimum requirement supersedes the minimum TOC removal required by the table in paragraph (b)(2) of this section. This requirement will be effective until such time as the State approves a new value based on the results of a new bench- and pilot-scale test. Failure to achieve State-set alternative minimum TOC removal levels is a violation of National Primary Drinking Water Regulations.

(ii) Bench- or pilot-scale testing of enhanced coagulation must be conducted by using representative water samples and adding 10 mg/L increments of alum (or equivalent amounts of ferric salt) until the pH is reduced to a level less than or equal to the enhanced coagulation Step 2 target pH shown in the following table:

ENHANCED COAGULATION STEP 2 TARGET pH

Alkalinity (mg/L as $CaCO_3$)	Target pH
0–60	5.5
>60–120	6.3
>120–240	7.0
>240	7.5

(iii) For waters with alkalinities of less than 60 mg/L for which addition of small amounts of alum or equivalent addition of iron coagulant drives the pH below 5.5 before significant TOC removal occurs, the system must add necessary chemicals to maintain the pH between 5.3 and 5.7 in samples until the TOC removal of 0.3 mg/L per 10 mg/L alum added (or equivalant addition of iron coagulant) is reached.

(iv) The system may operate at any coagulant dose or pH necessary (consistent with other NPDWRs) to achieve the minimum TOC percent removal approved under paragraph (b)(3) of this section.

(v) If the TOC removal is consistently less than 0.3 mg/L of TOC per 10 mg/L of incremental alum dose at all dosages of alum (or equivalant addition of iron coagulant), the water is deemed to contain TOC not amenable to enhanced coagulation. The system may then apply to the State for a waiver of enhanced coagulation requirements.

(c) *Compliance calculations.* (1) Subpart H systems other than those identified in paragraph (a)(2) or (a)(3) of this section must comply with requirements contained in paragraph (b)(2) or (b)(3) of this section. Systems must calculate compliance quarterly, beginning after the system has collected 12 months of data, by determining an annual average using the following method:

(i) Determine actual monthly TOC percent removal, equal to:

$$(1-(\text{treated water TOC}/\text{source water TOC}))\times 100$$

(ii) Determine the required monthly TOC percent removal (from either the table in paragraph (b)(2) of this section or from paragraph (b)(3) of this section).

(iii) Divide the value in paragraph (c)(1)(i) of this section by the value in paragraph (c)(1)(ii) of this section.

(iv) Add together the results of paragraph (c)(1)(iii) of this section for the last 12 months and divide by 12.

(v) If the value calculated in paragraph (c)(1)(iv) of this section is less than 1.00, the system is not in compliance with the TOC percent removal requirements.

(2) Systems may use the provisions in paragraphs (c)(2)(i) through (v) of this section in lieu of the calculations in paragraph (c)(1)(i) through (v) of this section to determine compliance with TOC percent removal requirements.

(i) In any month that the system's treated or source water TOC level, measured according to § 141.131(d)(3), is less than 2.0 mg/L, the system may assign a monthly value of 1.0 (in lieu of the value calculated in paragraph (c)(1)(iii) of this section) when calculating compliance under the provisions of paragraph (c)(1) of this section.

(ii) In any month that a system practicing softening removes at least 10 mg/L of magnesium hardness (as $CaCO_3$), the system may assign a monthly value of 1.0 (in lieu of the value calculated in paragraph (c)(1)(iii) of this section) when calculating compliance under the provisions of paragraph (c)(1) of this section.

(iii) In any month that the system's source water SUVA, prior to any treatment and measured according to § 141.131(d)(4), is ≤2.0 L/mg-m, the system may assign a monthly value of 1.0 (in lieu of the value calculated in paragraph (c)(1)(iii) of this section) when calculating compliance under the provisions of paragraph (c)(1) of this section.

(iv) In any month that the system's finished water SUVA, measured according to § 141.131(d)(4), is ≤2.0 L/mg-m, the system may assign a monthly value of 1.0 (in lieu of the value calculated in paragraph (c)(1)(iii) of this section) when calculating compliance under the provisions of paragraph (c)(1) of this section.

(v) In any month that a system practicing enhanced softening lowers alkalinity below 60 mg/L (as $CaCO_3$), the system may assign a monthly value of 1.0 (in lieu of the value calculated in paragraph (c)(1)(iii) of this section) when calculating compliance under the provisions of paragraph (c)(1) of this section.

(3) Subpart H systems using conventional treatment may also comply with the requirements of this section by meeting the criteria in paragraph (a)(2) or (3) of this section.

(d) *Treatment technique requirements for DBP precursors*. The Administrator identifies the following as treatment techniques to control the level of disinfection byproduct precursors in drinking water treatment and distribution systems: For Subpart H systems using conventional treatment, enhanced coagulation or enhanced softening.

[63 FR 69466, Dec. 16, 1998, as amended at 66 FR 3779, Jan. 16, 2001; 71 FR 482, Jan. 4, 2006]

Subparts M–N [Reserved]

Subpart O—Consumer Confidence Reports

SOURCE: 63 FR 44526, Aug. 19, 1998, unless otherwise noted.

§ 141.151 Purpose and applicability of this subpart.

(a) This subpart establishes the minimum requirements for the content of annual reports that community water systems must deliver to their customers. These reports must contain information on the quality of the water delivered by the systems and characterize the risks (if any) from exposure to contaminants detected in the drinking water in an accurate and understandable manner.

(b) Notwithstanding the provisions of § 141.3, this subpart applies only to community water systems.

(c) For the purpose of this subpart, *customers* are defined as billing units or service connections to which water is delivered by a community water system.

(d) For the purpose of this subpart, detected means: at or above the levels

prescribed by § 141.23(a)(4) for inorganic contaminants, at or above the levels prescribed by § 141.24(f)(7) for the contaminants listed in § 141.61(a), at or above the levels prescribed by § 141.24(h)(18) for the contaminants listed in § 141.61(c), at or above the levels prescribed by § 141.131(b)(2)(iv) for the contaminants or contaminant groups listed in § 141.64, and at or above the levels prescribed by § 141.25(c) for radioactive contaminants.

(e) A State that has primary enforcement responsibility may adopt by rule, after notice and comment, alternative requirements for the form and content of the reports. The alternative requirements must provide the same type and amount of information as required by §§ 141.153 and 141.154, and must be designed to achieve an equivalent level of public information and education as would be achieved under this subpart.

(f) For purpose of §§ 141.154 and 141.155 of this subpart, the term ''primacy agency'' refers to the State or tribal government entity that has jurisdiction over, and primary enforcement responsibility for, public water systems, even if that government does not have interim or final primary enforcement responsibility for this rule. Where the State or tribe does not have primary enforcement responsibility for public water systems, the term ''primacy agency'' refers to the appropriate EPA regional office.

[63 FR 44526, Aug. 19, 1998, as amended at 71 FR 483, Jan. 4, 2006]

§ 141.152 Effective dates.

(a) The regulations in this subpart shall take effect on September 18, 1998.

(b) Each existing community water system must deliver its first report by October 19, 1999, its second report by July 1, 2000, and subsequent reports by July 1 annually thereafter. The first report must contain data collected during, or prior to, calendar year 1998 as prescribed in § 141.153(d)(3). Each report thereafter must contain data collected during, or prior to, the previous calendar year.

(c) A new community water system must deliver its first report by July 1 of the year after its first full calendar year in operation and annually thereafter.

(d) A community water system that sells water to another community water system must deliver the applicable information required in § 141.153 to the buyer system:

(1) No later than April 19, 1999, by April 1, 2000, and by April 1 annually thereafter or

(2) On a date mutually agreed upon by the seller and the purchaser, and specifically included in a contract between the parties.

§ 141.153 Content of the reports.

(a) Each community water system must provide to its customers an annual report that contains the information specified in this section and § 141.154.

(b) Information on the source of the water delivered:

(1) Each report must identify the source(s) of the water delivered by the community water system by providing information on:

(i) The type of the water: e.g., surface water, ground water; and

(ii) The commonly used name (if any) and location of the body (or bodies) of water.

(2) If a source water assessment has been completed, the report must notify consumers of the availability of this information and the means to obtain it. In addition, systems are encouraged to highlight in the report significant sources of contamination in the source water area if they have readily available information. Where a system has received a source water assessment from the primacy agency, the report must include a brief summary of the system's susceptibility to potential sources of contamination, using language provided by the primacy agency or written by the operator.

(c) *Definitions.* (1) Each report must include the following definitions:

(i) *Maximum Contaminant Level Goal or MCLG:* The level of a contaminant in drinking water below which there is no known or expected risk to health. MCLGs allow for a margin of safety.

(ii) *Maximum Contaminant Level or MCL:* The highest level of a contaminant that is allowed in drinking water. MCLs are set as close to the MCLGs as feasible using the best available treatment technology.

(2) A report for a community water system operating under a variance or an exemption issued under § 1415 or 1416 of SDWA must include the following definition: *Variances and Exemptions:* State or EPA permission not to meet an MCL or a treatment technique under certain conditions.

(3) A report that contains data on contaminants that EPA regulates using any of the following terms must include the applicable definitions:

(i) *Treatment Technique:* A required process intended to reduce the level of a contaminant in drinking water.

(ii) *Action Level:* The concentration of a contaminant which, if exceeded, triggers treatment or other requirements which a water system must follow.

(iii) *Maximum residual disinfectant level goal or MRDLG:* The level of a drinking water disinfectant below which there is no known or expected risk to health. MRDLGs do not reflect the benefits of the use of disinfectants to control microbial contaminants.

(iv) *Maximum residual disinfectant level or MRDL:* The highest level of a disinfectant allowed in drinking water. There is convincing evidence that addition of a disinfectant is necessary for control of microbial contaminants.

(4) A report that contains information regarding a Level 1 or Level 2 Assessment required under Subpart Y of this part must include the applicable definitions:

(i) *Level 1 Assessment:* A Level 1 assessment is a study of the water system to identify potential problems and determine (if possible) why total coliform bacteria have been found in our water system.

(ii) *Level 2 Assessment:* A Level 2 assessment is a very detailed study of the water system to identify potential problems and determine (if possible) why an *E. coli* MCL violation has occurred and/or why total coliform bacteria have been found in our water system on multiple occasions.

(d) Information on detected contaminants.

(1) This sub-section specifies the requirements for information to be included in each report for contaminants subject to mandatory monitoring (except *Cryptosporidium*). It applies to:

(i) Contaminants subject to a MCL, action level, maximum residual disinfectant level, or treatment technique (regulated contaminants).

(ii) Contaminants for which monitoring is required by § 141.40 (unregulated contaminants); and

(iii) Disinfection by-products or microbial contaminants for which monitoring is required by §§ 141.142 and 141.143, except as provided under paragraph (e)(1) of this section, and which are detected in the finished water.

(2) The data relating to these contaminants must be displayed in one table or in several adjacent tables. Any additional monitoring results which a community water system chooses to include in its report must be displayed separately.

(3) The data must be derived from data collected to comply with EPA and State monitoring and analytical requirements during calendar year 1998 for the first report and subsequent calendar years thereafter except that:

(i) Where a system is allowed to monitor for regulated contaminants less often than once a year, the table(s) must include the date and results of the most recent sampling and the report must include a brief statement indicating that the data presented in the report are from the most recent testing done in accordance with the regulations. No data older than 5 years need be included.

(ii) Results of monitoring in compliance with §§ 141.142 and 141.143 need only be included for 5 years from the date of last sample or until any of the detected contaminants becomes regulated and subject to routine monitoring requirements, whichever comes first.

(4) For detected regulated contaminants (listed in appendix A to this subpart), the table(s) must contain:

(i) The MCL for that contaminant expressed as a number equal to or greater than 1.0 (as provided in appendix A to this subpart);

(ii) The MCLG for that contaminant expressed in the same units as the MCL;

(iii) If there is no MCL for a detected contaminant, the table must indicate that there is a treatment technique, or specify the action level, applicable to

that contaminant, and the report must include the definitions for treatment technique and/or action level, as appropriate, specified in paragraph (c)(3) of this section;

(iv) For contaminants subject to an MCL, except turbidity, total coliform, fecal coliform and *E. coli*, the highest contaminant level used to determine compliance with an NPDWR and the range of detected levels, as follows:

(A) When compliance with the MCL is determined annually or less frequently: The highest detected level at any sampling point and the range of detected levels expressed in the same units as the MCL.

(B) When compliance with the MCL is determined by calculating a running annual average of all samples taken at a monitoring location: the highest average of any of the monitoring locations and the range of all monitoring locations expressed in the same units as the MCL. For the MCLs for TTHM and HAA5 in §141.64(b)(2), systems must include the highest locational running annual average for TTHM and HAA5 and the range of individual sample results for all monitoring locations expressed in the same units as the MCL. If more than one location exceeds the TTHM or HAA5 MCL, the system must include the locational running annual averages for all locations that exceed the MCL.

(C) When compliance with the MCL is determined on a system-wide basis by calculating a running annual average of all samples at all monitoring locations: the average and range of detection expressed in the same units as the MCL. The system is required to include individual sample results for the IDSE conducted under subpart U of this part when determining the range of TTHM and HAA5 results to be reported in the annual consumer confidence report for the calendar year that the IDSE samples were taken.

NOTE TO PARAGRAPH (d)(4)(iv): When rounding of results to determine compliance with the MCL is allowed by the regulations, rounding should be done prior to multiplying the results by the factor listed in appendix A of this subpart.

(v) For turbidity.

(A) When it is reported pursuant to §141.13: The highest average monthly value.

(B) When it is reported pursuant to the requirements of §141.71: the highest monthly value. The report should include an explanation of the reasons for measuring turbidity.

(C) When it is reported pursuant to §141.73 or §141.173 or §141.551: the highest single measurement and the lowest monthly percentage of samples meeting the turbidity limits specified in §141.73 or §141.173, or §141.551 for the filtration technology being used. The report should include an explanation of the reasons for measuring turbidity;

(vi) For lead and copper: the 90th percentile value of the most recent round of sampling and the number of sampling sites exceeding the action level;

(vii) For total coliform analytical results until March 31, 2016:

(A) The highest monthly number of positive samples for systems collecting fewer than 40 samples per month; or

(B) The highest monthly percentage of positive samples for systems collecting at least 40 samples per month;

(viii) For fecal coliform and *E. coli* until March 31, 2016: The total number of positive samples;

(ix) The likely source(s) of detected contaminants to the best of the operator's knowledge. Specific information regarding contaminants may be available in sanitary surveys and source water assessments, and should be used when available to the operator. If the operator lacks specific information on the likely source, the report must include one or more of the typical sources for that contaminant listed in appendix A to this subpart that is most applicable to the system.

(x) For *E. coli* analytical results under subpart Y: The total number of positive samples.

(5) If a community water system distributes water to its customers from multiple hydraulically independent distribution systems that are fed by different raw water sources, the table should contain a separate column for each service area and the report should identify each separate distribution system. Alternatively, systems could produce separate reports tailored to include data for each service area.

(6) The table(s) must clearly identify any data indicating violations of MCLs, MRDLs, or treatment techniques, and the report must contain a clear and readily understandable explanation of the violation including: the length of the violation, the potential adverse health effects, and actions taken by the system to address the violation. To describe the potential health effects, the system must use the relevant language of appendix A to this subpart.

(7) For detected unregulated contaminants for which monitoring is required (except *Cryptosporidium*), the table(s) must contain the average and range at which the contaminant was detected. The report may include a brief explanation of the reasons for monitoring for unregulated contaminants.

(e) Information on *Cryptosporidium*, radon, and other contaminants:

(1) If the system has performed any monitoring for *Cryptosporidium*, including monitoring performed to satisfy the requirements of § 141.143, which indicates that *Cryptosporidium* may be present in the source water or the finished water, the report must include:

(i) A summary of the results of the monitoring; and

(ii) An explanation of the significance of the results.

(2) If the system has performed any monitoring for radon which indicates that radon may be present in the finished water, the report must include:

(i) The results of the monitoring; and

(ii) An explanation of the significance of the results.

(3) If the system has performed additional monitoring which indicates the presence of other contaminants in the finished water, EPA strongly encourages systems to report any results which may indicate a health concern. To determine if results may indicate a health concern, EPA recommends that systems find out if EPA has proposed an NPDWR or issued a health advisory for that contaminant by calling the Safe Drinking Water Hotline (800–426–4791). EPA considers detects above a proposed MCL or health advisory level to indicate possible health concerns. For such contaminants, EPA recommends that the report include:

(i) The results of the monitoring; and

(ii) An explanation of the significance of the results noting the existence of a health advisory or a proposed regulation.

(f) Compliance with NPDWR. In addition to the requirements of § 141.153(d)(6), the report must note any violation that occurred during the year covered by the report of a requirement listed below, and include a clear and readily understandable explanation of the violation, any potential adverse health effects, and the steps the system has taken to correct the violation.

(1) Monitoring and reporting of compliance data;

(2) Filtration and disinfection prescribed by subpart H of this part. For systems which have failed to install adequate filtration or disinfection equipment or processes, or have had a failure of such equipment or processes which constitutes a violation, the report must include the following language as part of the explanation of potential adverse health effects: Inadequately treated water may contain disease-causing organisms. These organisms include bacteria, viruses, and parasites which can cause symptoms such as nausea, cramps, diarrhea, and associated headaches.

(3) Lead and copper control requirements prescribed by subpart I of this part. For systems that fail to take one or more actions prescribed by §§ 141.80(d), 141.81, 141.82, 141.83 or 141.84, the report must include the applicable language of appendix A to this subpart for lead, copper, or both.

(4) Treatment techniques for Acrylamide and Epichlorohydrin prescribed by subpart K of this part. For systems that violate the requirements of subpart K of this part, the report must include the relevant language from appendix A to this subpart.

(5) Recordkeeping of compliance data.

(6) Special monitoring requirements prescribed by §§ 141.40 and 141.41; and

(7) Violation of the terms of a variance, an exemption, or an administrative or judicial order.

(g) Variances and Exemptions. If a system is operating under the terms of a variance or an exemption issued

under § 1415 or 1416 of SDWA, the report must contain:

(1) An explanation of the reasons for the variance or exemption;

(2) The date on which the variance or exemption was issued;

(3) A brief status report on the steps the system is taking to install treatment, find alternative sources of water, or otherwise comply with the terms and schedules of the variance or exemption; and

(4) A notice of any opportunity for public input in the review, or renewal, of the variance or exemption.

(h) Additional information:

(1) The report must contain a brief explanation regarding contaminants which may reasonably be expected to be found in drinking water including bottled water. This explanation may include the language of paragraphs (h)(1) (i) through (iii) or systems may use their own comparable language. The report also must include the language of paragraph (h)(1)(iv) of this section.

(i) The sources of drinking water (both tap water and bottled water) include rivers, lakes, streams, ponds, reservoirs, springs, and wells. As water travels over the surface of the land or through the ground, it dissolves naturally-occurring minerals and, in some cases, radioactive material, and can pick up substances resulting from the presence of animals or from human activity.

(ii) Contaminants that may be present in source water include:

(A) *Microbial contaminants,* such as viruses and bacteria, which may come from sewage treatment plants, septic systems, agricultural livestock operations, and wildlife.

(B) *Inorganic contaminants,* such as salts and metals, which can be naturally-occurring or result from urban stormwater runoff, industrial or domestic wastewater discharges, oil and gas production, mining, or farming.

(C) *Pesticides and herbicides,* which may come from a variety of sources such as agriculture, urban stormwater runoff, and residential uses.

(D) *Organic chemical contaminants,* including synthetic and volatile organic chemicals, which are by-products of industrial processes and petroleum production, and can also come from gas stations, urban stormwater runoff, and septic systems.

(E) *Radioactive contaminants,* which can be naturally-occurring or be the result of oil and gas production and mining activities.

(iii) In order to ensure that tap water is safe to drink, EPA prescribes regulations which limit the amount of certain contaminants in water provided by public water systems. FDA regulations establish limits for contaminants in bottled water which must provide the same protection for public health.

(iv) Drinking water, including bottled water, may reasonably be expected to contain at least small amounts of some contaminants. The presence of contaminants does not necessarily indicate that water poses a health risk. More information about contaminants and potential health effects can be obtained by calling the Environmental Protection Agency's Safe Drinking Water Hotline (800–426–4791).

(2) The report must include the telephone number of the owner, operator, or designee of the community water system as a source of additional information concerning the report.

(3) In communities with a large proportion of non-English speaking residents, as determined by the Primacy Agency, the report must contain information in the appropriate language(s) regarding the importance of the report or contain a telephone number or address where such residents may contact the system to obtain a translated copy of the report or assistance in the appropriate language.

(4) The report must include information (e.g., time and place of regularly scheduled board meetings) about opportunities for public participation in decisions that may affect the quality of the water.

(5) The systems may include such additional information as they deem necessary for public education consistent with, and not detracting from, the purpose of the report.

(6) *Systems required to comply with subpart S.* (i) Any ground water system that receives notice from the State of a significant deficiency or notice from a laboratory of a fecal indicator-positive ground water source sample that is not

invalidated by the State under § 141.402(d) must inform its customers of any significant deficiency that is uncorrected at the time of the next report or of any fecal indicator-positive ground water source sample in the next report. The system must continue to inform the public annually until the State determines that particular significant deficiency is corrected or the fecal contamination in the ground water source is addressed under § 141.403(a). Each report must include the following elements.

(A) The nature of the particular significant deficiency or the source of the fecal contamination (if the source is known) and the date the significant deficiency was identified by the State or the dates of the fecal indicator-positive ground water source samples;

(B) If the fecal contamination in the ground water source has been addressed under § 141.403(a) and the date of such action;

(C) For each significant deficiency or fecal contamination in the ground water source that has not been addressed under § 141.403(a), the State-approved plan and schedule for correction, including interim measures, progress to date, and any interim measures completed; and

(D) If the system receives notice of a fecal indicator-positive ground water source sample that is not invalidated by the State under § 141.402(d), the potential health effects using the health effects language of Appendix A of subpart O.

(ii) If directed by the State, a system with significant deficiencies that have been corrected before the next report is issued must inform its customers of the significant deficiency, how the deficiency was corrected, and the date of correction under paragraph (h)(6)(i) of this section.

(7) *Systems required to comply with subpart Y.* (i) Any system required to comply with the Level 1 assessment requirement or a Level 2 assessment requirement that is not due to an *E. coli* MCL violation must include in the report the text found in paragraph (h)(7)(i)(A) and paragraphs (h)(7)(i)(B) and (C) of this section as appropriate, filling in the blanks accordingly and the text found in paragraphs (h)(7)(i)(D)(1) and (2) of this section if appropriate.

(A) Coliforms are bacteria that are naturally present in the environment and are used as an indicator that other, potentially harmful, waterborne pathogens may be present or that a potential pathway exists through which contamination may enter the drinking water distribution system. We found coliforms indicating the need to look for potential problems in water treatment or distribution. When this occurs, we are required to conduct assessment(s) to identify problems and to correct any problems that were found during these assessments.

(B) During the past year we were required to conduct [INSERT NUMBER OF LEVEL 1ASSESSMENTS] Level 1 assessment(s). [INSERT NUMBER OF LEVEL 1 ASSESSMENTS] Level 1 assessment(s) were completed. In addition, we were required to take [INSERT NUMBER OF CORRECTIVE ACTIONS] corrective actions and we completed [INSERT NUMBER OF CORRECTIVE ACTIONS] of these actions.

(C) During the past year [INSERT NUMBER OF LEVEL 2 ASSESSMENTS] Level 2 assessments were required to be completed for our water system. [INSERT NUMBER OF LEVEL 2 ASSESSMENTS] Level 2 assessments were completed. In addition, we were required to take [INSERT NUMBER OF CORRECTIVE ACTIONS] corrective actions and we completed [INSERT NUMBER OF CORRECTIVE ACTIONS] of these actions.

(D) Any system that has failed to complete all the required assessments or correct all identified sanitary defects, is in violation of the treatment technique requirement and must also include one or both of the following statements, as appropriate:

(*1*) During the past year we failed to conduct all of the required assessment(s).

(*2*) During the past year we failed to correct all identified defects that were found during the assessment.

(ii) Any system required to conduct a Level 2 assessment due to an *E. coli* MCL violation must include in the report the text found in paragraphs (h)(7)(ii)(A) and (B) of this section, filling in the blanks accordingly and the

text found in paragraphs (h)(7)(ii)(C)(1) and (2) of this section, if appropriate.

(A) *E. coli* are bacteria whose presence indicates that the water may be contaminated with human or animal wastes. Human pathogens in these wastes can cause short-term effects, such as diarrhea, cramps, nausea, headaches, or other symptoms. They may pose a greater health risk for infants, young children, the elderly, and people with severely compromised immune systems. We found *E. coli* bacteria, indicating the need to look for potential problems in water treatment or distribution. When this occurs, we are required to conduct assessment(s) to identify problems and to correct any problems that were found during these assessments.

(B) We were required to complete a Level 2 assessment because we found *E. coli* in our water system. In addition, we were required to take [INSERT NUMBER OF CORRECTIVE ACTIONS] corrective actions and we completed [INSERT NUMBER OF CORRECTIVE ACTIONS] of these actions.

(C) Any system that has failed to complete the required assessment or correct all identified sanitary defects, is in violation of the treatment technique requirement and must also include one or both of the following statements, as appropriate:

(*1*) We failed to conduct the required assessment.

(*2*) We failed to correct all sanitary defects that were identified during the assessment that we conducted.

(iii) If a system detects *E. coli* and has violated the *E. coli MCL*, in addition to completing the table as required in paragraph (d)(4) of this section, the system must include one or more of the following statements to describe any noncompliance, as applicable:

(A) We had an *E. coli*-positive repeat sample following a total coliform-positive routine sample.

(B) We had a total coliform-positive repeat sample following an *E. coli*-positive routine sample.

(C) We failed to take all required repeat samples following an *E. coli*-positive routine sample.

(D) We failed to test for *E. coli* when any repeat sample tests positive for total coliform.

(iv) If a system detects *E. coli* and has not violated the *E. coli MCL*, in addition to completing the table as required in paragraph (d)(4) of this section, the system may include a statement that explains that although they have detected *E. coli*, they are not in violation of the *E. coli* MCL.

[63 FR 44526, Aug. 19, 1998, as amended at 63 FR 69516, Dec. 16, 1998; 64 FR 34733, June 29, 1999; 65 FR 26022, May 4, 2000; 67 FR 1836, Jan. 14, 2002; 71 FR 483, Jan. 4, 2006; 71 FR 65651, Nov. 8, 2006; 78 FR 10348, Feb. 13, 2013]

§ 141.154 Required additional health information.

(a) All reports must prominently display the following language: Some people may be more vulnerable to contaminants in drinking water than the general population. Immuno-compromised persons such as persons with cancer undergoing chemotherapy, persons who have undergone organ transplants, people with HIV/AIDS or other immune system disorders, some elderly, and infants can be particularly at risk from infections. These people should seek advice about drinking water from their health care providers. EPA/CDC guidelines on appropriate means to lessen the risk of infection by *Cryptosporidium* and other microbial contaminants are available from the Safe Drinking Water Hotline (800–426–4791).

(b) Ending in the report due by July 1, 2001, a system which detects arsenic at levels above 0.025 mg/L, but below the 0.05 mg/L, and beginning in the report due by July 1, 2002, a system that detects arsenic above 0.005 mg/L and up to and including 0.010 mg/L:

(1) Must include in its report a short informational statement about arsenic, using language such as: While your drinking water meets EPA's standard for arsenic, it does contain low levels of arsenic. EPA's standard balances the current understanding of arsenic's possible health effects against the costs of removing arsenic from drinking water. EPA continues to research the health effects of low levels of arsenic, which is a mineral known to cause cancer in humans at high concentrations and is

linked to other health effects such as skin damage and circulatory problems.

(2) May write its own educational statement, but only in consultation with the Primacy Agency.

(c) A system which detects nitrate at levels above 5 mg/l, but below the MCL:

(1) Must include a short informational statement about the impacts of nitrate on children using language such as: Nitrate in drinking water at levels above 10 ppm is a health risk for infants of less than six months of age. High nitrate levels in drinking water can cause blue baby syndrome. Nitrate levels may rise quickly for short periods of time because of rainfall or agricultural activity. If you are caring for an infant you should ask advice from your health care provider.

(2) May write its own educational statement, but only in consultation with the Primacy Agency.

(d) Every report must include the following lead-specific information:

(1) A short informational statement about lead in drinking water and its effects on children. The statement must include the following information:

If present, elevated levels of lead can cause serious health problems, especially for pregnant women and young children. Lead in drinking water is primarily from materials and components associated with service lines and home plumbing. [NAME OF UTILITY] is responsible for providing high quality drinking water, but cannot control the variety of materials used in plumbing components. When your water has been sitting for several hours, you can minimize the potential for lead exposure by flushing your tap for 30 seconds to 2 minutes before using water for drinking or cooking. If you are concerned about lead in your water, you may wish to have your water tested. Information on lead in drinking water, testing methods, and steps you can take to minimize exposure is available from the Safe Drinking Water Hotline or at *http://www.epa.gov/safewater/lead*.

(2) A system may write its own educational statement, but only in consultation with the State.

(e) Community water systems that detect TTHM above 0.080 mg/l, but below the MCL in § 141.12, as an annual average, monitored and calculated under the provisions of § 141.30, must include health effects language for TTHMs prescribed by appendix A.

(f) Beginning in the report due by July 1, 2002, and ending January 22, 2006, a community water system that detects arsenic above 0.010 mg/L and up to and including 0.05 mg/L must include the arsenic health effects language prescribed by appendix A to subpart O of this part.

[63 FR 44526, Aug. 19, 1998, as amended at 63 FR 69475, Dec. 16, 1998; 64 FR 34733, June 29, 1999; 65 FR 26023, May 4, 2000; 66 FR 7064, Jan. 22, 2001; 68 FR 14506, Mar. 25, 2003; 72 FR 57820, Oct. 10, 2007]

§ 141.155 Report delivery and recordkeeping.

(a) Except as provided in paragraph (g) of this section, each community water system must mail or otherwise directly deliver one copy of the report to each customer.

(b) The system must make a good faith effort to reach consumers who do not get water bills, using means recommended by the primacy agency. EPA expects that an adequate good faith effort will be tailored to the consumers who are served by the system but are not bill-paying customers, such as renters or workers. A good faith effort to reach consumers would include a mix of methods appropriate to the particular system such as: Posting the reports on the Internet; mailing to postal patrons in metropolitan areas; advertising the availability of the report in the news media; publication in a local newspaper; posting in public places such as cafeterias or lunch rooms of public buildings; delivery of multiple copies for distribution by single-biller customers such as apartment buildings or large private employers; delivery to community organizations.

(c) No later than the date the system is required to distribute the report to its customers, each community water system must mail a copy of the report to the primacy agency, followed within 3 months by a certification that the report has been distributed to customers, and that the information is correct and consistent with the compliance monitoring data previously submitted to the primacy agency.

(d) No later than the date the system is required to distribute the report to its customers, each community water system must deliver the report to any other agency or clearinghouse identified by the primacy agency.

(e) Each community water system must make its reports available to the public upon request.

(f) Each community water system serving 100,000 or more persons must post its current year's report to a publicly-accessible site on the Internet.

(g) The Governor of a State or his designee, or the Tribal Leader where the tribe has met the eligibility requirements contained in § 142.72 for the purposes of waiving the mailing requirement, can waive the requirement of paragraph (a) of this section for community water systems serving fewer than 10,000 persons. In consultation with the tribal government, the Regional Administrator may waive the requirement of § 141.155(a) in areas in Indian country where no tribe has been deemed eligible.

(1) Such systems must:

(i) Publish the reports in one or more local newspapers serving the area in which the system is located;

(ii) Inform the customers that the reports will not be mailed, either in the newspapers in which the reports are published or by other means approved by the State; and

(iii) Make the reports available to the public upon request.

(2) Systems serving 500 or fewer persons may forego the requirements of paragraphs (g)(1)(i) and (ii) of this section if they provide notice at least once per year to their customers by mail, door-to-door delivery or by posting in an appropriate location that the report is available upon request.

(h) Any system subject to this subpart must retain copies of its Consumer Confidence Report for no less than 3 years.

[63 FR 44526, Aug. 19, 1998, as amended at 65 FR 26023, May 4, 2000]

Appendix A to Subpart O of Part 141—Regulated Contaminants

Contaminant (units)	Traditional MCL in mg/L	To convert for CCR, multiply by	MCL in CCR units	MCLG	Major sources in drinking water	Health effects language
Microbiological contaminants:						
Total Coliform Bacteria †.	MCL (systems that collect ≥40 samples/month) 5% of monthly samples are positive; (systems that collect <40 samples/month) 1 positive monthly sample.	.....	MCL (systems that collect ≥40 samples/month) 5% of monthly samples are positive; (systems that collect <40 samples/month) 1 positive monthly sample..	0	Naturally present in the environment.	Coliforms are bacteria that are naturally present in the environment and are used as an indicator that other, potentially-harmful, bacteria may be present. Coliforms were found in more samples than allowed and this was a warning of potential problems.
Total Coliform Bacteria ‡.	TT	.....	TT	N/A	Naturally present in the environment.	Use language found in §141.153(h)(7)(i)(A)
Fecal coliform and *E. coli* †	0	.....	0	0	Human and animal fecal waste ...	Fecal coliforms and *E. coli* are bacteria whose presence indicates that the water may be contaminated with human or animal wastes. Microbes in these wastes can cause short-term effects, such as diarrhea, cramps, nausea, headaches, or other symptoms. They may pose a special health risk for infants, young children, some of the elderly, and people with severely compromised immune systems.

E. coli ‡	Routine and repeat samples are total coliform-positive and either is *E. coli*-positive or system fails to take repeat samples following *E. coli*-positive routine sample or system fails to analyze total coliform-positive repeat sample for *E. coli.*		Routine and repeat samples are total coliform-positive and either is *E. coli*-positive or system fails to take repeat samples following *E. coli*-positive routine sample or system fails to analyze total coliform-positive repeat sample for *E. coli.*	0	Human and animal fecal waste	*E. coli* are bacteria whose presence indicates that the water may be contaminated with human or animal wastes. Human pathogens in these wastes can cause short-term effects, such as diarrhea, cramps, nausea, headaches, or other symptoms. They may pose a greater health risk for infants, young children, the elderly, and people with severely-compromised immune systems.
Fecal Indicators (enterococci or coliphage).	TT		TT	N/A	Human and animal fecal waste	Fecal indicators are microbes whose presence indicates that the water may be contaminated with human or animal wastes. Microbes in these wastes can cause short-term health effects, such as diarrhea, cramps, nausea, headaches, or other symptoms. They may pose a special health risk for infants, young children, some of the elderly, and people with severely compromised immune systems.
Total organic carbon (ppm).	TT		TT	N/A	Naturally present in the environment.	Total organic carbon (TOC) has no health effects. However, total organic carbon provides a medium for the formation of disinfection by products. These byproducts include trihalomethanes (THMs) and haloacetic acids (HAAs). Drinking water containing these byproducts in excess of the MCL may lead to adverse health effects, liver or kidney problems, or nervous system effects, and may lead to an increased risk of getting cancer.

Contaminant (units)	Traditional MCL in mg/L	To convert for CCR, multiply by	MCL in CCR units	MCLG	Major sources in drinking water	Health effects language
Turbidity (NTU)	TT		TT	N/A	Soil runoff	Turbidity has no health effects. However, turbidity can interfere with disinfection and provide a medium for microbial growth. Turbidity may indicate the presence of disease-causing organisms. These organisms include bacteria, viruses, and parasites that can cause symptoms such as nausea, cramps, diarrhea and associated headaches.
Radioactive contaminants:						
Beta/photon emitters (mrem/yr).	4 mrem/yr	–	4	0	Decay of natural and man-made deposits.	Certain minerals are radioactive and may emit forms of radiation known as photons and beta radiation. Some people who drink water containing beta particle and photon radioactivity in excess of the MCL over many years may have an increased risk of getting cancer.
Alpha emitters (pCi/L)	15 pCi/L	–	15	0	Erosion of natural deposits	Certain minerals are radioactive and may emit a form of radiation known as alpha radiation. Some people who drink water containing alpha emitters in excess of the MCL over many years may have an increased risk of getting cancer.
Combined radium (pCi/L).	5 pCi/L	–	5	0	Erosion of natural deposits	Some people who drink water containing radium-226 or -228 in excess of the MCL over many years may have an increased risk of getting cancer.
Uranium (pCi/L)	30 μg/L	–	30	0	Erosion of natural deposits	Some people who drink water containing uranium in excess of the MCL over many years may have an increased risk of getting cancer and kidney toxicity.

Inorganic contaminants:						
Antimony (ppb)	.006	1000	6	6	Discharge from petroleum refineries; fire retardants; ceramics; electronics; solder.	Some people who drink water containing antimony well in excess of the MCL over many years could experience increases in blood cholesterol and decreases in blood sugar.
Arsenic (ppb)	[1] 0.010	1000	[1] 10.	[1] 0	Erosion of natural deposits; Runoff from orchards; Runoff from glass and electronics production wastes.	Some people who drink water containing arsenic in excess of the MCL over many years could experience skin damage or problems with their circulatory system, and may have an increased risk of getting cancer.
Asbestos (MFL)	7 MFL		7	7	Decay of asbestos cement water mains; Erosion of natural deposits.	Some people who drink water containing asbestos in excess of the MCL over many years may have an increased risk of developing benign intestinal polyps.
Barium (ppm)	2		2	2	Discharge of drilling wastes; Discharge from metal refineries; Erosion of natural deposits.	Some people who drink water containing barium in excess of the MCL over many years could experience an increase in their blood pressure.
Beryllium (ppb)	.004	1000	4	4	Discharge from metal refineries and coal-burning factories; Discharge from electrical, aerospace, and defense industries.	Some people who drink water containing beryllium well in excess of the MCL over many years could develop intestinal lesions
Bromate (ppb)	.010	1000	10	0	By-product of drinkig water disinfection.	Some people who drink water of containing bromate in excess of the MCL over many years may have an increased risk of getting cancer.
Cadmium (ppb)	.005	1000	5	5	Corrosion of galvanized pipes; Erosion of natural deposits; Discharge from metal refineries; Runoff from waste batteries and paints.	Some people who drink water containing cadmium in excess of the MCL over many years could experience kidney damage.

Contaminant (units)	Traditional MCL in mg/L	To convert for CCR, multiply by	MCL in CCR units	MCLG	Major sources in drinking water	Health effects language
Chloramines (ppm)	MRDL = 4		MRDL = 4	MRDLG = 4	Water additive used to control microbes.	Some people who use water containing chloramines well in excess of the MRDL could experience irritating effects to their eyes and nose. Some people who drink water containing chloramines well in excess of the MRDL could experience stomach discomfort or anemia.
Chlorine (ppm)	MRDL = 4		MRDL = 4	MRDLG = 4	Water additive used to control microbes.	Some people who use water containing chlorine well in excess of the MRDL could experience irritating effects to their eyes and nose. Some people who drink water containing chlorine well in excess of the MRDL could experience stomach discomfort.
Chlorine dioxide (ppb)	MRDL = .8	1000	MRDL = 800	MRDLG = 800	Water additive used to control micorbes.	Some infants and young children who drink water chlorine dioxide in excess of the MRDL could experience nervous system effects. Similar effects may occur in fetuses of pregnant women who drink water containing chlorine dioxide in excess of the MRDL. Some people may experience anemia.
Chlorite (ppm)	1		1	0.8	By-product of drinking water disinfection.	Some infants and young children who drink water containing chlorite in excess of the MCL could experience nervous system effects. Similar effects may occur in fetuses of pregnant women who drink water containing chlorite in excess of the MCL. Some people may experience anemia.
Chromium (ppb)	.1	1000	100	100	Discharge from steel and pulp mills; Erosion of natural deposits.	Some people who use water containing chromium well in excess of the MCL over many years could experience allergic dermatitis.

Copper (ppm)	AL = 1.3		AL = 1.3	1.3	Corrosion of household plumbing systems; Erosion of natural deposits.	Copper is an essential nutrient, but some people who drink water containing copper in excess of the action level over a relatively short amount of time could experience gastro-intestinal distress. Some people who drink water containing copper in excess of the action level over many years could suffer liver or kidney damage. People with Wilson's disease should consult their personal doctor.
Cyanide (ppb)	.2	1000	200	200	Discharge from steel/metal factories; Discharge from plastic and fertilizer factories.	Some people who drink water containing cyanide well in excess of the MCL over many years could experience nerve damage or problems with their thyroid.
Fluoride (ppm)	4		4	4	Erosion of natural deposits; Water additive which promotes strong teeth; Discharge from fertilizer and aluminum factories.	Some people who drink water containing fluoride in excess of the MCL over many years could get bone disease, including pain and tenderness of the bones. Fluoride in drinking water at half the MCL or more may cause mottling of children's teeth, usually in children less than nine years old. Mottling, also known as dental fluorosis, may include brown staining and/or pitting of the teeth, and occurs only in developing teeth before they erupt from the gums.
Lead (ppb)	AL = .015	1000	AL = 15	0	Corrosion of household plumbing systems; Erosion of natural deposits.	Infants and children who drink water containing lead in excess of the action level could experience delays in their physical or mental development. Children could show slight deficits in attention span and learning abilities. Adults who drink this water over many years could develop kidney problems or high blood pressure.

Contaminant (units)	Traditional MCL in mg/L	To convert for CCR, multiply by	MCL in CCR units	MCLG	Major sources in drinking water	Health effects language
Mercury [inorganic] (ppb).	.002	1000	2	2	Erosion of natural deposits; Discharge from refineries and factories; Runoff from landfills; Runoff from cropland.	Some people who drink water containing inorganic mercury well in excess of the MCL over many years could experience kidney damage.
Nitrate (ppm)	10		10	10	Runoff from fertilizer use; Leaching from septic tanks, sew age; Erosion of natural deposits.	Infants below the age of six months who drink water containing nitrate in excess of the MCL could become seriously ill and, if untreated, may die. Symptoms include shortness of breath and blue baby syndrome.
Nitrite (ppm)	1		1	1	Runoff from fertilizer use; Leaching from septic tanks, sew age; Erosion of natural deposits.	Infants below the age of six months who drink water containing nitrite in excess of the MCL could become seriously ill and, if untreated, may die. Symptoms include shortness of breath and blue baby syndrome.
Selenium (ppb)	.05	1000	50	50	Discharge from petroleum and metal refineries; Erosion of natural deposits; Discharge from mines.	Selenium is an essential nutrient. However, some people who drink water containing selenium in excess of the MCL over many years could experience hair or fingernail losses, numbness in fingers or toes, or problems with their circulation.
Thallium (ppb)	.002	1000	2	0.5	Leaching from ore-processing sites; Discharge from electronics, glass, and drug factories.	Some people who drink water containing thallium in excess of the MCL over many years could experience hair loss, changes in their blood, or problems with their kidneys, intestines, or liver.
Synthetic organic contaminants including pesticides and herbicides:						
2,4-D (ppb)	.07	1000	70	70	Runoff from herbicide used on row crops.	Some people who drink water containing the weed killer 2,4-D well in excess of the MCL over many years could experience problems with their kidneys, liver, or adrenal glands.

2,4,5-TP [Silvex](ppb)	.05	1000	50	50	Residue of banned herbicide	Some people who drink water containing silvex in excess of the MCL over many years could experience liver problems.
Acrylamide	TT		TT	0	Added to water during sewage/wastewater treatment.	Some people who drink water containing high levels of acrylamide over a long period of time could have problems with their nervous system or blood, and may have an increased risk of getting cancer.
Alachlor (ppb)	.002	1000	2	0	Runoff from herbicide used on row crops.	Some people who drink water containing alachlor in excess of the MCL over many years could have problems with their eyes, liver, kidneys, or spleen, or experience anemia, and may have an increased risk of getting cancer.
Atrazine (ppb)	.003	1000	3	3	Runoff from herbicide used on row crops.	Some people who drink water containing atrazine well in excess of the MCL over many years could experience problems with their cardiovascular system or reproductive difficulties.
Benzo(a)pyrene [PAH] (nanograms/l).	.0002	1,000,000	200	0	Leaching from linings of water storage tanks and distribution lines.	Some people who drink water containing benzo(a)pyrene in excess of the MCL over many years may experience reproductive difficulties and may have an increased risk of getting cancer.
Carbofuran (ppb)	.04	1000	40	40	Leaching of soil fumigant used on rice and alfalfa.	Some people who drink water containing carbofuran in excess of the MCL over many years could experience problems with their blood, or nervous or reproductive systems.
Chlordane (ppb)	.002	1000	2	0	Residue of banned termiticide	Some people who drink water containing chlordane in excess of the MCL over many years could experience problems with their liver or nervous system, and may have an increased risk of getting cancer.

Contaminant (units)	Traditional MCL in mg/L	To convert for CCR, multiply by	MCL in CCR units	MCLG	Major sources in drinking water	Health effects language
Dalapon (ppb)	.2	1000	200	200	Runoff from herbicide used on rights of way.	Some people who drink water containing dalapon well in excess of the MCL over many years could experience minor kidney changes.
Di(2-ethylhexyl) adipate (ppb).	.4	1000	400	400	Discharge from chemical factories.	Some people who drink water containing di(2-ethylhexyl) adipate well in excess of the MCL over many years could experience toxic effects such as weight loss, liver enlargement or possible reproductive difficulties.
Di(2-ethylhexyl) phthalate (ppb).	.006	1000	6	0	Discharge from rubber and chemical factories.	Some people who drink water containing di(2-ethylhexyl) phthalate well in excess of the MCL over many years may have problems with their liver, or experience reproductive difficulties, and may have an increased risk of getting cancer.
Dibromochloropropane (ppt).	.0002	1,000,000	200	0	Runoff/leaching from soil fumigant used on soybeans, cotton, pineapples, and orchards.	Some people who drink water containing DBCP in excess of the MCL over many years could experience reproductive problems and may have an increased risk of getting cancer.
Dinoseb (ppb)	.007	1000	7	7	Runoff from herbicide used on soybeans and vegetables.	Some people who drink water containing dinoseb well in excess of the MCL over many years could experience reproductive difficulties.
Diquat (ppb)	.02	1000	20	20	Runoff from herbicide use	Some people who drink water containing diquat in excess of the MCL over many years could get cataracts.
Dioxin [2,3,7,8-TCDD] (ppq).	.00000003	1,000,000, 000	30	0	Emissions from waste incineration and other combustion; Discharge from chemical factories.	Some people who drink water containing dioxin in excess of the MCL over many years could experience reproductive difficulties and may have an increased risk of getting cancer.

Endothall (ppb)	.1	1000	100	100	Runoff from herbicide use	Some people who drink water containing endothall in excess of the MCL over many years could experience problems with their stomach or intestines.
Endrin (ppb)	.002	1000	2	2	Residue of banned insecticide	Some people who drink water containing endrin in excess of the MCL over many years could experience liver problems.
Epichlorohydrin	TT		TT	0	Discharge from industrial chemical factories; An impurity of some water treatment chemicals.	Some people who drink water containing high levels of epichlorohydrin over a long period of time could experience stomach problems, and may have an increased risk of getting cancer.
Ethylene dibromide (ppt).	.00005	1,000,000	50	0	Discharge from petroleum refineries.	Some people who drink water containing ethylene dibromide in excess of the MCL over many years could experience problems with their liver, stomach, reproductive system, or kidneys, and may have an increased risk of getting cancer.
Glyphosate (ppb)	.7	1000	700	700	Runoff from herbicide use	Some people who drink water containing glyphosate in excess of the MCL over many years could experience problems with their kidneys or reproductive difficulties.
Heptachlor (ppt)	.0004	1,000,000	400	0	Residue of banned pesticide	Some people who drink water containing heptachlor in excess of the MCL over many years could experience liver damage and may have an increased risk of getting cancer.
Heptachlor epoxide (ppt).	.0002	1,000,000	200	0	Breakdown of heptachlor	Some people who drink water containing heptachlor epoxide in excess of the MCL over many years could experience liver damage, and may have an increased risk of getting cancer.

Contaminant (units)	Traditional MCL in mg/L	To convert for CCR, multiply by	MCL in CCR units	MCLG	Major sources in drinking water	Health effects language
Hexachlorobenzene (ppb).	.001	1000	1	0	Discharge from metal refineries and agricultural chemical factories.	Some people who drink water containing hexachlorobenzene in excess of the MCL over many years could experience problems with their liver or kidneys, or adverse reproductive effects, and may have an increased risk of getting cancer.
Hexachlorocyclopentadiene (ppb).	.05	1000	50	50	Discharge from chemical factories.	Some people who drink water containing hexachlorocyclopentadiene well in excess of the MCL over many years could experience problems with their kidneys or stomach.
Lindane (ppt)	.0002	1,000,000	200	200	Runoff/leaching from insecticide used on cattle, lumber, gardens.	Some people who drink water containing lindane in excess of the MCL over many years could experience problems with their kidneys or liver.
Methoxychlor (ppb)	.04	1000	40	40	Runoff/leaching from insecticide used on fruits, vegetables, alfalfa, livestock.	Some people who drink water containing methoxychlor in excess of the MCL over many years could experience reproductive difficulties.
Oxamyl [Vydate] (ppb)	.2	1000	200	200	Runoff/leaching from insecticide used on apples, potatoes and tomatoes.	Some people who drink water containing oxamyl in excess of the MCL over many years could experience slight nervous system effects.
PCBs [Polychlorinated biphenyls] (ppt).	.0005	1,000,000	500	0	Runoff from landfills; Discharge of waste chemicals.	Some people who drink water containing PCBs in excess of the MCL over many years could experience changes in their skin, problems with their thymus gland, immune deficiencies, or reproductive or nervous system difficulties, and may have an increased risk of getting cancer.

Pentachlorophenol (ppb).	.001	1000	1	0	Discharge from wood preserving factories.	Some people who drink water containing pentachlorophenol in excess of the MCL over many years could experience problems with their liver or kidneys, and may have an increased risk of getting cancer.
Picloram (ppb)	.5	1000	500	500	Herbicide runoff	Some people who drink water containing picloram in excess of the MCL over many years could experience problems with their liver.
Simazine (ppb)	.004	1000	4	4	Herbicide runoff	Some people who drink water containing simazine in excess of the MCL over many years could experience problems with their blood.
Toxaphene (ppb)	.003	1000	3	0	Runoff/leaching from insecticide used on cotton and cattle.	Some people who drink water containing toxaphene in excess of the MCL over many years could have problems with their kidneys, liver, or thyroid, and may have an increased risk of getting cancer.
Volatile organic contaminants:						
Benzene (ppb)	.005	1000	5	0	Discharge from factories; Leaching from gas storage tanks and landfills.	Some people who drink water containing benzene in excess of the MCL over many years could experience anemia or a decrease in blood platelets, and may have an increased risk of getting cancer.
Carbon tetrachloride (ppb).	.005	1000	5	0	Discharge from chemical plants and other industrial activities.	Some people who drink water containing carbon tetrachloride in excess of the MCL over many years could experience problems with their liver and may have an increased risk of getting cancer.
Chlorobenzene (ppb)	.1	1000	100	100	Discharge from chemical and agricultural chemical factories.	Some people who drink water containing chlorobenzene in excess of the MCL over many years could experience problems with their liver or kidneys.
o-Dichlorobenzene (ppb).	.6	1000	600	600	Discharge from industrial chemical factories.	Some people who drink water containing o-dichlorobenzene well in excess of the MCL over many years could experience problems with their liver, kidneys, or circulatory systems.

Contaminant (units)	Traditional MCL in mg/L	To convert for CCR, multiply by	MCL in CCR units	MCLG	Major sources in drinking water	Health effects language
p-Dichlorobenzene (ppb).	.075	1000	75	75	Discharge from industrial chemical factories.	Some people who drink water containing p-dichlorobenzene in excess of the MCL over many years could experience anemia, damage to their liver, kidneys, or spleen, or changes in their blood.
1,2-Dichloroethane (ppb).	.005	1000	5	0	Discharge from industrial chemical factories.	Some people who drink water containing 1,2-dichloroethane in excess of the MCL over many years may have an increased risk of getting cancer.
1,1-Dichloroethylene (ppb).	.007	1000	7	7	Discharge from industrial chemical factories.	Some people who drink water containing 1,1-dichloroethylene in excess of the MCL over many years could experience problems with their liver.
cis-1,2-Dichloroethylene (ppb).	.07	1000	70	70	Discharge from industrial chemical factories.	Some people who drink water containing cis-1,2-dichloroethylene in excess of the MCL over many years could experience problems with their liver.
trans-1,2-Dichloroethylene (ppb).	.1	1000	100	100	Discharge from industrial chemical factories.	Some people who drink water containing trans-1,2-dichloroethylene well in excess of the MCL over many years could experience problems with their liver.
Dichloromethane (ppb)	.005	1000	5	0	Discharge from pharmaceutical and chemical factories.	Some people who drink water containing dichloromethane in excess of the MCL over many years could have liver problems and may have an increased risk of getting cancer.
1,2-Dichloropropane (ppb).	.005	1000	5	0	Discharge from industrial chemical factories.	Some people who drink water containing 1,2-dichloropropane in excess of the MCL over many years may have an increased risk of getting cancer.
Ethylbenzene (ppb)	.7	1000	700	700	Discharge from petroleum refineries.	Some people who drink water containing ethylbenzene well in excess of the MCL over many years could experience problems with their liver or kidneys.

Haloacetic Acids (HAA) (ppb).	.060	1000	60	N/A	By-product of drinking water disinfection.	Some people who drink water containing haloacetic acids in excess of the MCL over many years may have an increased risk of getting cancer.
Styrene (ppb)	.1	1000	100	100	Discharge from rubber and plastic factories; Leaching from landfills.	Some people who drink water containing styrene well in excess of the MCL over many years could have problems with their liver, kidneys, or circulatory system.
Tetrachloroethylene (ppb).	.005	1000	5	0	Discharge from factories and dry cleaners.	Some people who drink water containing tetrachloroethylene in excess of the MCL over many years could have problems with their liver, and may have an increased risk of getting cancer.
1,2,4-Trichlorobenzene (ppb).	.07	1000	70	70	Discharge from textile-finishing factories.	Some people who drink water containing 1,2,4-trichlorobenzene well in excess of the MCL over many years could experience changes in their adrenal glands.
1,1,1-Trichloroethane (ppb).	.2	1000	200	200	Discharge from metal degreasing sites and other factories.	Some people who drink water containing 1,1,1-trichloroethane in excess of the MCL over many years could experience problems with their liver, nervous system, or circulatory system.
1,1,2-Trichloroethane (ppb).	.005	1000	5	3	Discharge from industrial chemical factories.	Some people who drink water containing 1,1,2-trichloroethane well in excess of the MCL over many years could have problems with their liver, kidneys, or immune systems.
Trichloroethylene (ppb)	.005	1000	5	0	Discharge from metal degreasing sites and other factories.	Some people who drink water containing trichloroethylene in excess of the MCL over many years could experience problems with their liver and may have an increased risk of getting cancer.

Contaminant (units)	Traditional MCL in mg/L	To convert for CCR, multiply by	MCL in CCR units	MCLG	Major sources in drinking water	Health effects language
TTHMs [Total trihalomethanes] (ppb).	0.10/.080	1000	100/80	N/A	By-product of drinking water disinfection.	Some people who drink water containing trihalomethanes in excess of the MCL over many years may experience problems with their liver, kidneys, or central nervous systems, and may have an increased risk of getting cancer.
Toluene (ppm)	1		1	1	Discharge from petroleum factories.	Some people who drink water containing toluene well in excess of the MCL over many years could have problems with their nervous system, kidneys, or liver.
Vinyl Chloride (ppb)	.002	1000	2	0	Leaching from PVC piping; Discharge from plastics factories.	Some people who drink water containing vinyl chloride in excess of the MCL over many years may have an increased risk of getting cancer.
Xylenes (ppm)	10		10	10	Discharge from petroleum factories; Discharge from chemical factories.	Some people who drink water containing xylenes in excess of the MCL over many years could experience damage to their nervous system.

† Until March 31, 2016.
‡ Beginning April 1, 2016.
[1] These arsenic values are effective January 23, 2006. Until then, the MCL is 0.05 mg/L and there is no MCLG.
Key:
AL = Action Level
MCL = Maximum Contaminant Level
MCLG = Maximum Contaminant Level Goal
MFL = million fibers per liter
MRDL = Maximum Residual Disinfectant Level
MRDLG = Maximum Residual Disinfectant Level Goal
mrem/year = millirems per year (a measure of radiation absorbed by the body)
N/A = Not Applicable
NTU = Nephelometric Turbidity Units (a measure of water clarity)
pCi/l = picocuries per liter (a measure of radioactivity)
ppm = parts per million, or milligrams per liter (mg/l)
ppb = parts per billion, or micrograms per liter (μg/l)
ppt = parts per trillion, or nanograms per liter
ppq = parts per quadrillion, or picograms per liter
TT = Treatment Technique

[65 FR 26024, May 4, 2000, as amended at 65 FR 76749, Dec. 7, 2000; 66 FR 7064, Jan. 22, 2001; 67 FR 70855, Nov. 27, 2002; 67 FR 73011, Dec. 9, 2002; 68 FR 14506, Mar. 25, 2003; 71 FR 65652, Nov. 8, 2006; 78 FR 10349, Feb. 13, 2013]

Subpart P—Enhanced Filtration and Disinfection—Systems Serving 10,000 or More People

SOURCE: 63 FR 69516, Dec. 16, 1998, unless otherwise noted.

§ 141.170 General requirements.

(a) The requirements of this subpart P constitute national primary drinking water regulations. These regulations establish requirements for filtration and disinfection that are in addition to criteria under which filtration and disinfection are required under subpart H of this part. The requirements of this subpart are applicable to subpart H systems serving at least 10,000 people, beginning January 1, 2002 unless otherwise specified in this subpart. The regulations in this subpart establish or extend treatment technique requirements in lieu of maximum contaminant levels for the following contaminants: *Giardia lamblia*, viruses, heterotrophic plate count bacteria, *Legionella*, *Cryptosporidium*, and turbidity. Each subpart H system serving at least 10,000 people must provide treatment of its source water that complies with these treatment technique requirements and are in addition to those identified in § 141.70. The treatment technique requirements consist of installing and properly operating water treatment processes which reliably achieve:

(1) At least 99 percent (2-log) removal of *Cryptosporidium* between a point where the raw water is not subject to recontamination by surface water runoff and a point downstream before or at the first customer for filtered systems, or *Cryptosporidium* control under the watershed control plan for unfiltered systems.

(2) Compliance with the profiling and benchmark requirements under the provisions of § 141.172.

(b) A public water system subject to the requirements of this subpart is considered to be in compliance with the requirements of paragraph (a) of this section if:

(1) It meets the requirements for avoiding filtration in §§ 141.71 and 141.171 and the disinfection requirements in §§ 141.72 and 141.172; or

(2) It meets the applicable filtration requirements in either § 141.73 or § 141.173 and the disinfection requirements in §§ 141.72 and 141.172.

(c) Systems are not permitted to begin construction of uncovered finished water storage facilities beginning February 16, 1999.

(d) Subpart H systems that did not conduct optional monitoring under § 141.172 because they served fewer than 10,000 persons when such monitoring was required, but serve more than 10,000 persons prior to January 1, 2005 must comply with §§ 141.170, 141.171, 141.173, 141.174, and 141.175. These systems must also consult with the State to establish a disinfection benchmark. A system that decides to make a significant change to its disinfection practice, as described in § 141.172(c)(1)(i) through (iv) must consult with the State prior to making such change.

[63 FR 69516, Dec. 16, 1998, as amended at 66 FR 3779, Jan. 16, 2001; 67 FR 1836, Jan. 14, 2002; 69 FR 38856, June 29, 2004]

§ 141.171 Criteria for avoiding filtration.

In addition to the requirements of § 141.71, a public water system subject to the requirements of this subpart that does not provide filtration must meet all of the conditions of paragraphs (a) and (b) of this section.

(a) *Site-specific conditions.* In addition to site-specific conditions in § 141.71(b), systems must maintain the watershed control program under § 141.71(b)(2) to minimize the potential for contamination by *Cryptosporidium* oocysts in the source water. The watershed control program must, for *Cryptosporidium*:

(1) Identify watershed characteristics and activities which may have an adverse effect on source water quality; and

(2) Monitor the occurrence of activities which may have an adverse effect on source water quality.

(b) During the onsite inspection conducted under the provisions of § 141.71(b)(3), the State must determine whether the watershed control program established under § 141.71(b)(2) is adequate to limit potential contamination by *Cryptosporidium* oocysts. The adequacy of the program must be based

on the comprehensiveness of the watershed review; the effectiveness of the system's program to monitor and control detrimental activities occurring in the watershed; and the extent to which the water system has maximized land ownership and/or controlled land use within the watershed.

§ 141.172 Disinfection profiling and benchmarking.

(a) *Determination of systems required to profile.* A public water system subject to the requirements of this subpart must determine its TTHM annual average using the procedure in paragraph (a)(1) of this section and its HAA5 annual average using the procedure in paragraph (a)(2) of this section. The annual average is the arithmetic average of the quarterly averages of four consecutive quarters of monitoring.

(1) The TTHM annual average must be the annual average during the same period as is used for the HAA5 annual average.

(i) Those systems that collected data under the provisions of subpart M (Information Collection Rule) must use the results of the samples collected during the last four quarters of required monitoring under § 141.142.

(ii) Those systems that use ''grandfathered'' HAA5 occurrence data that meet the provisions of paragraph (a)(2)(ii) of this section must use TTHM data collected at the same time under the provisions of §§ 141.12 and 141.30.

(iii) Those systems that use HAA5 occurrence data that meet the provisions of paragraph (a)(2)(iii)(A) of this section must use TTHM data collected at the same time under the provisions of §§ 141.12 and 141.30.

(2) The HAA5 annual average must be the annual average during the same period as is used for the TTHM annual average.

(i) Those systems that collected data under the provisions of subpart M (Information Collection Rule) must use the results of the samples collected during the last four quarters of required monitoring under § 141.142.

(ii) Those systems that have collected four quarters of HAA5 occurrence data that meets the routine monitoring sample number and location requirements for TTHM in §§ 141.12 and 141.30 and handling and analytical method requirements of § 141.142(b)(1) may use those data to determine whether the requirements of this section apply.

(iii) Those systems that have not collected four quarters of HAA5 occurrence data that meets the provisions of either paragraph (a)(2)(i) or (ii) of this section by March 16, 1999 must either:

(A) Conduct monitoring for HAA5 that meets the routine monitoring sample number and location requirements for TTHM in §§ 141.12 and 141.30 and handling and analytical method requirements of § 141.142(b)(1) to determine the HAA5 annual average and whether the requirements of paragraph (b) of this section apply. This monitoring must be completed so that the applicability determination can be made no later than March 31, 2000, or

(B) Comply with all other provisions of this section as if the HAA5 monitoring had been conducted and the results required compliance with paragraph (b) of this section.

(3) The system may request that the State approve a more representative annual data set than the data set determined under paragraph (a)(1) or (2) of this section for the purpose of determining applicability of the requirements of this section.

(4) The State may require that a system use a more representative annual data set than the data set determined under paragraph (a)(1) or (2) of this section for the purpose of determining applicability of the requirements of this section.

(5) The system must submit data to the State on the schedule in paragraphs (a)(5)(i) through (v) of this section.

(i) Those systems that collected TTHM and HAA5 data under the provisions of subpart M (Information Collection Rule), as required by paragraphs (a)(1)(i) and (a)(2)(i) of this section, must submit the results of the samples collected during the last 12 months of required monitoring under § 141.142 not later than December 31, 1999.

(ii) Those systems that have collected four consecutive quarters of HAA5 occurrence data that meets the routine monitoring sample number and location for TTHM in §§ 141.12 and 141.30

and handling and analytical method requirements of §141.142(b)(1), as allowed by paragraphs (a)(1)(ii) and (a)(2)(ii) of this section, must submit those data to the State not later than April 16, 1999. Until the State has approved the data, the system must conduct monitoring for HAA5 using the monitoring requirements specified under paragraph (a)(2)(iii) of this section.

(iii) Those systems that conduct monitoring for HAA5 using the monitoring requirements specified by paragraphs (a)(1)(iii) and (a)(2)(iii)(A) of this section, must submit TTHM and HAA5 data not later than March 31, 2000.

(iv) Those systems that elect to comply with all other provisions of this section as if the HAA5 monitoring had been conducted and the results required compliance with this section, as allowed under paragraphs (a)(2)(iii)(B) of this section, must notify the State in writing of their election not later than December 31, 1999.

(v) If the system elects to request that the State approve a more representative annual data set than the data set determined under paragraph (a)(2)(i) of this section, the system must submit this request in writing not later than December 31, 1999.

(6) Any system having either a TTHM annual average ≥0.064 mg/L or an HAA5 annual average ≥0.048 mg/L during the period identified in paragraphs (a)(1) and (2) of this section must comply with paragraph (b) of this section.

(b) *Disinfection profiling*. (1) Any system that meets the criteria in paragraph (a)(6) of this section must develop a disinfection profile of its disinfection practice for a period of up to three years.

(2) The system must monitor daily for a period of 12 consecutive calendar months to determine the total logs of inactivation for each day of operation, based on the CT99.9 values in Tables 1.1–1.6, 2.1, and 3.1 of §141.74(b), as appropriate, through the entire treatment plant. This system must begin this monitoring not later than April 1, 2000. As a minimum, the system with a single point of disinfectant application prior to entrance to the distribution system must conduct the monitoring in paragraphs (b)(2)(i) through (iv) of this section. A system with more than one point of disinfectant application must conduct the monitoring in paragraphs (b)(2)(i) through (iv) of this section for each disinfection segment. The system must monitor the parameters necessary to determine the total inactivation ratio, using analytical methods in §141.74(a), as follows:

(i) The temperature of the disinfected water must be measured once per day at each residual disinfectant concentration sampling point during peak hourly flow.

(ii) If the system uses chlorine, the pH of the disinfected water must be measured once per day at each chlorine residual disinfectant concentration sampling point during peak hourly flow.

(iii) The disinfectant contact time(s) (''T'') must be determined for each day during peak hourly flow.

(iv) The residual disinfectant concentration(s) (''C'') of the water before or at the first customer and prior to each additional point of disinfection must be measured each day during peak hourly flow.

(3) In lieu of the monitoring conducted under the provisions of paragraph (b)(2) of this section to develop the disinfection profile, the system may elect to meet the requirements of paragraph (b)(3)(i) of this section. In addition to the monitoring conducted under the provisions of paragraph (b)(2) of this section to develop the disinfection profile, the system may elect to meet the requirements of paragraph (b)(3)(ii) of this section.

(i) A PWS that has three years of existing operational data may submit those data, a profile generated using those data, and a request that the State approve use of those data in lieu of monitoring under the provisions of paragraph (b)(2) of this section not later than March 31, 2000. The State must determine whether these operational data are substantially equivalent to data collected under the provisions of paragraph (b)(2) of this section. These data must also be representative of *Giardia lamblia* inactivation through the entire treatment plant and not just of certain treatment segments. Until the State approves this request, the

system is required to conduct monitoring under the provisions of paragraph (b)(2) of this section.

(ii) In addition to the disinfection profile generated under paragraph (b)(2) of this section, a PWS that has existing operational data may use those data to develop a disinfection profile for additional years. Such systems may use these additional yearly disinfection profiles to develop a benchmark under the provisions of paragraph (c) of this section. The State must determine whether these operational data are substantially equivalent to data collected under the provisions of paragraph (b)(2) of this section. These data must also be representative of inactivation through the entire treatment plant and not just of certain treatment segments.

(4) The system must calculate the total inactivation ratio as follows:

(i) If the system uses only one point of disinfectant application, the system may determine the total inactivation ratio for the disinfection segment based on either of the methods in paragraph (b)(4)(i)(A) or (b)(4)(i)(B) of this section.

(A) Determine one inactivation ratio ($CTcalc/CT_{99.9}$) before or at the first customer during peak hourly flow.

(B) Determine successive $CTcalc/CT_{99.9}$ values, representing sequential inactivation ratios, between the point of disinfectant application and a point before or at the first customer during peak hourly flow. Under this alternative, the system must calculate the total inactivation ratio by determining ($CTcalc/CT_{99.9}$) for each sequence and then adding the ($CTcalc/CT_{99.9}$) values together to determine (Σ ($CTcalc/CT_{99.9}$)).

(ii) If the system uses more than one point of disinfectant application before the first customer, the system must determine the CT value of each disinfection segment immediately prior to the next point of disinfectant application, or for the final segment, before or at the first customer, during peak hourly flow. The ($CTcalc/CT_{99.9}$) value of each segment and ($\Sigma(CTcalc/CT_{99.9})$) must be calculated using the method in paragraph (b)(4)(i) of this section.

(iii) The system must determine the total logs of inactivation by multiplying the value calculated in paragraph (b)(4)(i) or (ii) of this section by 3.0.

(5) A system that uses either chloramines or ozone for primary disinfection must also calculate the logs of inactivation for viruses using a method approved by the State.

(6) The system must retain disinfection profile data in graphic form, as a spreadsheet, or in some other format acceptable to the State for review as part of sanitary surveys conducted by the State.

(c) *Disinfection benchmarking.* (1) Any system required to develop a disinfection profile under the provisions of paragraphs (a) and (b) of this section and that decides to make a significant change to its disinfection practice must consult with the State prior to making such change. Significant changes to disinfection practice are:

(i) Changes to the point of disinfection;

(ii) Changes to the disinfectant(s) used in the treatment plant;

(iii) Changes to the disinfection process; and

(iv) Any other modification identified by the State.

(2) Any system that is modifying its disinfection practice must calculate its disinfection benchmark using the procedure specified in paragraphs (c)(2)(i) through (ii) of this section.

(i) For each year of profiling data collected and calculated under paragraph (b) of this section, the system must determine the lowest average monthly *Giardia lamblia* inactivation in each year of profiling data. The system must determine the average *Giardia lamblia* inactivation for each calendar month for each year of profiling data by dividing the sum of daily *Giardia lamblia* of inactivation by the number of values calculated for that month.

(ii) The disinfection benchmark is the lowest monthly average value (for systems with one year of profiling data) or average of lowest monthly average values (for systems with more than one year of profiling data) of the monthly logs of *Giardia lamblia* inactivation in each year of profiling data.

(3) A system that uses either chloramines or ozone for primary disinfection must also calculate the disinfection benchmark for viruses using a method approved by the State.

(4) The system must submit information in paragraphs (c)(4)(i) through (iii) of this section to the State as part of its consultation process.

(i) A description of the proposed change;

(ii) The disinfection profile for *Giardia lamblia* (and, if necessary, viruses) under paragraph (b) of this section and benchmark as required by paragraph (c)(2) of this section; and

(iii) An analysis of how the proposed change will affect the current levels of disinfection.

[63 FR 69516, Dec. 16, 1998, as amended at 66 FR 3779, Jan. 16, 2001]

§ 141.173 Filtration.

A public water system subject to the requirements of this subpart that does not meet all of the criteria in this subpart and subpart H of this part for avoiding filtration must provide treatment consisting of both disinfection, as specified in § 141.72(b), and filtration treatment which complies with the requirements of paragraph (a) or (b) of this section or § 141.73 (b) or (c) by December 31, 2001.

(a) *Conventional filtration treatment or direct filtration.* (1) For systems using conventional filtration or direct filtration, the turbidity level of representative samples of a system's filtered water must be less than or equal to 0.3 NTU in at least 95 percent of the measurements taken each month, measured as specified in § 141.74(a) and (c).

(2) The turbidity level of representative samples of a system's filtered water must at no time exceed 1 NTU, measured as specified in § 141.74(a) and (c).

(3) A system that uses lime softening may acidify representative samples prior to analysis using a protocol approved by the State.

(b) *Filtration technologies other than conventional filtration treatment, direct filtration, slow sand filtration, or diatomaceous earth filtration.* A public water system may use a filtration technology not listed in paragraph (a) of this section or in § 141.73(b) or (c) if it demonstrates to the State, using pilot plant studies or other means, that the alternative filtration technology, in combination with disinfection treatment that meets the requirements of § 141.72(b), consistently achieves 99.9 percent removal and/or inactivation of *Giardia lamblia* cysts and 99.99 percent removal and/or inactivation of viruses, and 99 percent removal of *Cryptosporidium* oocysts, and the State approves the use of the filtration technology. For each approval, the State will set turbidity performance requirements that the system must meet at least 95 percent of the time and that the system may not exceed at any time at a level that consistently achieves 99.9 percent removal and/or inactivation of *Giardia lamblia* cysts, 99.99 percent removal and/or inactivation of viruses, and 99 percent removal of *Cryptosporidium* oocysts.

[63 FR 69516, Dec. 16, 1998, as amended at 65 FR 20313, Apr. 14, 2000; 66 FR 3779, Jan. 16, 2001]

§ 141.174 Filtration sampling requirements.

(a) Monitoring requirements for systems using filtration treatment. In addition to monitoring required by § 141.74, a public water system subject to the requirements of this subpart that provides conventional filtration treatment or direct filtration must conduct continuous monitoring of turbidity for each individual filter using an approved method in § 141.74(a) and must calibrate turbidimeters using the procedure specified by the manufacturer. Systems must record the results of individual filter monitoring every 15 minutes.

(b) If there is a failure in the continuous turbidity monitoring equipment, the system must conduct grab sampling every four hours in lieu of continuous monitoring, but for no more than five working days following the failure of the equipment.

§ 141.175 Reporting and recordkeeping requirements.

In addition to the reporting and recordkeeping requirements in § 141.75, a public water system subject to the requirements of this subpart that provides conventional filtration treatment

or direct filtration must report monthly to the State the information specified in paragraphs (a) and (b) of this section beginning January 1, 2002. In addition to the reporting and recordkeeping requirements in § 141.75, a public water system subject to the requirements of this subpart that provides filtration approved under § 141.173(b) must report monthly to the State the information specified in paragraph (a) of this section beginning January 1, 2002. The reporting in paragraph (a) of this section is in lieu of the reporting specified in § 141.75(b)(1).

(a) Turbidity measurements as required by § 141.173 must be reported within 10 days after the end of each month the system serves water to the public. Information that must be reported includes:

(1) The total number of filtered water turbidity measurements taken during the month.

(2) The number and percentage of filtered water turbidity measurements taken during the month which are less than or equal to the turbidity limits specified in § 141.173(a) or (b).

(3) The date and value of any turbidity measurements taken during the month which exceed 1 NTU for systems using conventional filtration treatment or direct filtration, or which exceed the maximum level set by the State under § 141.173(b).

(b) Systems must maintain the results of individual filter monitoring taken under § 141.174 for at least three years. Systems must report that they have conducted individual filter turbidity monitoring under § 141.174 within 10 days after the end of each month the system serves water to the public. Systems must report individual filter turbidity measurement results taken under § 141.174 within 10 days after the end of each month the system serves water to the public only if measurements demonstrate one or more of the conditions in paragraphs (b)(1) through (4) of this section. Systems that use lime softening may apply to the State for alternative exceedance levels for the levels specified in paragraphs (b)(1) through (4) of this section if they can demonstrate that higher turbidity levels in individual filters are due to lime carryover only and not due to degraded filter performance.

(1) For any individual filter that has a measured turbidity level of greater than 1.0 NTU in two consecutive measurements taken 15 minutes apart, the system must report the filter number, the turbidity measurement, and the date(s) on which the exceedance occurred. In addition, the system must either produce a filter profile for the filter within 7 days of the exceedance (if the system is not able to identify an obvious reason for the abnormal filter performance) and report that the profile has been produced or report the obvious reason for the exceedance.

(2) For any individual filter that has a measured turbidity level of greater than 0.5 NTU in two consecutive measurements taken 15 minutes apart at the end of the first four hours of continuous filter operation after the filter has been backwashed or otherwise taken offline, the system must report the filter number, the turbidity, and the date(s) on which the exceedance occurred. In addition, the system must either produce a filter profile for the filter within 7 days of the exceedance (if the system is not able to identify an obvious reason for the abnormal filter performance) and report that the profile has been produced or report the obvious reason for the exceedance.

(3) For any individual filter that has a measured turbidity level of greater than 1.0 NTU in two consecutive measurements taken 15 minutes apart at any time in each of three consecutive months, the system must report the filter number, the turbidity measurement, and the date(s) on which the exceedance occurred. In addition, the system must conduct a self-assessment of the filter within 14 days of the exceedance and report that the self-assessment was conducted. The self assessment must consist of at least the following components: assessment of filter performance; development of a filter profile; identification and prioritization of factors limiting filter performance; assessment of the applicability of corrections; and preparation of a filter self-assessment report.

(4) For any individual filter that has a measured turbidity level of greater

than 2.0 NTU in two consecutive measurements taken 15 minutes apart at any time in each of two consecutive months, the system must report the filter number, the turbidity measurement, and the date(s) on which the exceedance occurred. In addition, the system must arrange for the conduct of a comprehensive performance evaluation by the State or a third party approved by the State no later than 30 days following the exceedance and have the evaluation completed and submitted to the State no later than 90 days following the exceedance.

(c) *Additional reporting requirements.* (1) If at any time the turbidity exceeds 1 NTU in representative samples of filtered water in a system using conventional filtration treatment or direct filtration, the system must inform the State as soon as possible, but no later than the end of the next business day.

(2) If at any time the turbidity in representative samples of filtered water exceeds the maximum level set by the State under § 141.173(b) for filtration technologies other than conventional filtration treatment, direct filtration, slow sand filtration, or diatomaceous earth filtration, the system must inform the State as soon as possible, but no later than the end of the next business day.

[63 FR 69516, Dec. 16, 1998, as amended at 66 FR 3779, Jan. 16, 2001]

Subpart Q—Public Notification of Drinking Water Violations

SOURCE: 65 FR 26035, May 4, 2000, unless otherwise noted.

§ 141.201 General public notification requirements.

Public water systems in States with primacy for the public water system supervision (PWSS) program must comply with the requirements in this subpart no later than May 6, 2002 or on the date the State-adopted rule becomes effective, whichever comes first. Public water systems in jurisdictions where EPA directly implements the PWSS program must comply with the requirements in this subpart on October 31, 2000. Prior to these dates, public water systems must continue to comply with the public notice requirements in § 141.32 of this part. The term ''primacy agency'' is used in this subpart to refer to either EPA or the State or the Tribe in cases where EPA, the State, or the Tribe exercises primary enforcement responsibility for this subpart.

(a) *Who must give public notice?* Each owner or operator of a public water system (community water systems, non-transient non-community water systems, and transient non-community water systems) must give notice for all violations of national primary drinking water regulations (NPDWR) and for other situations, as listed in Table 1. The term ''NPDWR violations'' is used in this subpart to include violations of the maximum contaminant level (MCL), maximum residual disinfection level (MRDL), treatment technique (TT), monitoring requirements, and testing procedures in this part 141. Appendix A to this subpart identifies the tier assignment for each specific violation or situation requiring a public notice.

TABLE 1 TO § 141.201—VIOLATION CATEGORIES AND OTHER SITUATIONS REQUIRING A PUBLIC NOTICE

(1) NPDWR violations:
- (i) Failure to comply with an applicable maximum contaminant level (MCL) or maximum residual disinfectant level (MRDL).
- (ii) Failure to comply with a prescribed treatment technique (TT).
- (iii) Failure to perform water quality monitoring, as required by the drinking water regulations.
- (iv) Failure to comply with testing procedures as prescribed by a drinking water regulation.

(2) Variance and exemptions under sections 1415 and 1416 of SDWA:
- (i) Operation under a variance or an exemption.
- (ii) Failure to comply with the requirements of any schedule that has been set under a variance or exemption.

(3) Special public notices:
- (i) Occurrence of a waterborne disease outbreak or other waterborne emergency.

TABLE 1 TO § 141.201—VIOLATION CATEGORIES AND OTHER SITUATIONS REQUIRING A PUBLIC NOTICE—Continued

(ii) Exceedance of the nitrate MCL by non-community water systems (NCWS), where granted permission by the primacy agency under 141.11(d) of this part.
(iii) Exceedance of the secondary maximum contaminant level (SMCL) for fluoride.
(iv) Availability of unregulated contaminant monitoring data.
(v) Other violations and situations determined by the primacy agency to require a public notice under this subpart, not already listed in Appendix A.

(b) *What type of public notice is required for each violation or situation?* Public notice requirements are divided into three tiers, to take into account the seriousness of the violation or situation and of any potential adverse health effects that may be involved. The public notice requirements for each violation or situation listed in Table 1 of this section are determined by the tier to which it is assigned. Table 2 of this section provides the definition of each tier. Appendix A of this part identifies the tier assignment for each specific violation or situation.

TABLE 2 TO § 141.201—DEFINITION OF PUBLIC NOTICE TIERS

(1) *Tier 1 public notice*—required for NPDWR violations and situations with significant potential to have serious adverse effects on human health as a result of short-term exposure.
(2) *Tier 2 public notice*—required for all other NPDWR violations and situations with potential to have serious adverse effects on human health.
(3) *Tier 3 public notice*—required for all other NPDWR violations and situations not included in Tier 1 and Tier 2.

(c) *Who must be notified?* (1) Each public water system must provide public notice to persons served by the water system, in accordance with this subpart. Public water systems that sell or otherwise provide drinking water to other public water systems (*i.e.*, to consecutive systems) are required to give public notice to the owner or operator of the consecutive system; the consecutive system is responsible for providing public notice to the persons it serves.

(2) If a public water system has a violation in a portion of the distribution system that is physically or hydraulically isolated from other parts of the distribution system, the primacy agency may allow the system to limit distribution of the public notice to only persons served by that portion of the system which is out of compliance. Permission by the primacy agency for limiting distribution of the notice must be granted in writing.

(3) A copy of the notice must also be sent to the primacy agency, in accordance with the requirements under § 141.31(d).

§ 141.202 *Tier 1 Public Notice*—Form, manner, and frequency of notice.

(a) *Which violations or situations require a Tier 1 public notice?* Table 1 of this section lists the violation categories and other situations requiring a Tier 1 public notice. Appendix A to this subpart identifies the tier assignment for each specific violation or situation.

TABLE 1 TO § 141.202—VIOLATION CATEGORIES AND OTHER SITUATIONS REQUIRING A TIER 1 PUBLIC NOTICE

(1) Violation of the MCL for total coliforms when fecal coliform or E. coli are present in the water distribution system (as specified in § 141.63(b)), or when the water system fails to test for fecal coliforms or E. coli when any repeat sample tests positive for coliform (as specified in § 141.21(e)); Violation of the MCL for *E. coli* (as specified in § 141.63(c));
(2) Violation of the MCL for nitrate, nitrite, or total nitrate and nitrite, as defined in § 141.62, or when the water system fails to take a confirmation sample within 24 hours of the system's receipt of the first sample showing an exceedance of the nitrate or nitrite MCL, as specified in § 141.23(f)(2);
(3) Exceedance of the nitrate MCL by non-community water systems, where permitted to exceed the MCL by the primacy agency under § 141.11(d), as required under § 141.209;

TABLE 1 TO § 141.202—VIOLATION CATEGORIES AND OTHER SITUATIONS REQUIRING A TIER 1 PUBLIC NOTICE—Continued

(4) Violation of the MRDL for chlorine dioxide, as defined in § 141.65(a), when one or more samples taken in the distribution system the day following an exceedance of the MRDL at the entrance of the distribution system exceed the MRDL, or when the water system does not take the required samples in the distribution system, as specified in § 141.133(c)(2)(i);
(5) Violation of the turbidity MCL under § 141.13(b), where the primacy agency determines after consultation that a Tier 1 notice is required or where consultation does not take place within 24 hours after the system learns of the violation;
(6) Violation of the Surface Water Treatment Rule (SWTR), Interim Enhanced Surface Water Treatment Rule (IESWTR) or Long Term 1 Enhanced Surface Water Treatment Rule (LT1ESWTR) treatment technique requirement resulting from a single exceedance of the maximum allowable turbidity limit (as identified in appendix A), where the primacy agency determines after consultation that a Tier 1 notice is required or where consultation does not take place within 24 hours after the system learns of the violation;
(7) Occurrence of a waterborne disease outbreak, as defined in § 141.2, or other waterborne emergency (such as a failure or significant interruption in key water treatment processes, a natural disaster that disrupts the water supply or distribution system, or a chemical spill or unexpected loading of possible pathogens into the source water that significantly increases the potential for drinking water contamination);
(8) Detection of *E. coli*, enterococci, or coliphage in source water samples as specified in § 141.402(a) and § 141.402(b);
(9) Other violations or situations with significant potential to have serious adverse effects on human health as a result of short-term exposure, as determined by the primacy agency either in its regulations or on a case-by-case basis.

(b) *When is the Tier 1 public notice to be provided?* What additional steps are required? Public water systems must:

(1) Provide a public notice as soon as practical but no later than 24 hours after the system learns of the violation;

(2) Initiate consultation with the primacy agency as soon as practical, but no later than 24 hours after the public water system learns of the violation or situation, to determine additional public notice requirements; and

(3) Comply with any additional public notification requirements (including any repeat notices or direction on the duration of the posted notices) that are established as a result of the consultation with the primacy agency. Such requirements may include the timing, form, manner, frequency, and content of repeat notices (if any) and other actions designed to reach all persons served.

(c) *What is the form and manner of the public notice?* Public water systems must provide the notice within 24 hours in a form and manner reasonably calculated to reach all persons served. The form and manner used by the public water system are to fit the specific situation, but must be designed to reach residential, transient, and non-transient users of the water system. In order to reach all persons served, water systems are to use, at a minimum, one or more of the following forms of delivery:

(1) Appropriate broadcast media (such as radio and television);

(2) Posting of the notice in conspicuous locations throughout the area served by the water system;

(3) Hand delivery of the notice to persons served by the water system; or

(4) Another delivery method approved in writing by the primacy agency.

[65 FR 26035, May 4, 2000, as amended at 67 FR 1836, Jan. 14, 2002; 71 FR 65652, Nov. 8, 2006; 78 FR 10350, Feb. 13, 2013]

§ 141.203 *Tier 2 Public Notice*—Form, manner, and frequency of notice.

(a) *Which violations or situations require a Tier 2 public notice?* Table 1 of this section lists the violation categories and other situations requiring a Tier 2 public notice. Appendix A to this subpart identifies the tier assignment for each specific violation or situation.

TABLE 1 TO § 141.203—VIOLATION CATEGORIES AND OTHER SITUATIONS REQUIRING A TIER 2 PUBLIC NOTICE

(1) All violations of the MCL, MRDL, and treatment technique requirements, except where a Tier 1 notice is required under § 141.202(a) or where the primacy agency determines that a Tier 1 notice is required;
(2) Violations of the monitoring and testing procedure requirements, where the primacy agency determines that a Tier 2 rather than a Tier 3 public notice is required, taking into account potential health impacts and persistence of the violation; and
(3) Failure to comply with the terms and conditions of any variance or exemption in place.
(4) Failure to take corrective action or failure to maintain at least 4-log treatment of viruses (using inactivation, removal, or a State-approved combination of 4-log virus inactivation and removal) before or at the first customer under § 141.403(a).

(b) *When is the Tier 2 public notice to be provided?* (1) Public water systems must provide the public notice as soon as practical, but no later than 30 days after the system learns of the violation. If the public notice is posted, the notice must remain in place for as long as the violation or situation persists, but in no case for less than seven days, even if the violation or situation is resolved. The primacy agency may, in appropriate circumstances, allow additional time for the initial notice of up to three months from the date the system learns of the violation. It is not appropriate for the primacy agency to grant an extension to the 30-day deadline for any unresolved violation or to allow across-the-board extensions by rule or policy for other violations or situations requiring a Tier 2 public notice. Extensions granted by the primacy agency must be in writing.

(2) The public water system must repeat the notice every three months as long as the violation or situation persists, unless the primacy agency determines that appropriate circumstances warrant a different repeat notice frequency. In no circumstance may the repeat notice be given less frequently than once per year. It is not appropriate for the primacy agency to allow less frequent repeat notice for an MCL or treatment technique violation under the Total Coliform Rule or subpart Y of this part or a treatment technique violation under the Surface Water Treatment Rule or Interim Enhanced Surface Water Treatment Rule. It is also not appropriate for the primacy agency to allow through its rules or policies across-the-board reductions in the repeat notice frequency for other ongoing violations requiring a Tier 2 repeat notice. Primacy agency determinations allowing repeat notices to be given less frequently than once every three months must be in writing.

(3) For the turbidity violations specified in this paragraph, public water systems must consult with the primacy agency as soon as practical but no later than 24 hours after the public water system learns of the violation, to determine whether a Tier 1 public notice under § 141.202(a) is required to protect public health. When consultation does not take place within the 24-hour period, the water system must distribute a Tier 1 notice of the violation within the next 24 hours (*i.e.*, no later than 48 hours after the system learns of the violation), following the requirements under § 141.202(b) and (c). Consultation with the primacy agency is required for:

(i) Violation of the turbidity MCL under § 141.13(b); or

(ii) Violation of the SWTR, IESWTR or LT1ESWTR treatment technique requirement resulting from a single exceedance of the maximum allowable turbidity limit.

(c) *What is the form and manner of the Tier 2 public notice?* Public water systems must provide the initial public notice and any repeat notices in a form and manner that is reasonably calculated to reach persons served in the required time period. The form and manner of the public notice may vary based on the specific situation and type of water system, but it must at a minimum meet the following requirements:

(1) Unless directed otherwise by the primacy agency in writing, community water systems must provide notice by:

(i) Mail or other direct delivery to each customer receiving a bill and to other service connections to which

water is delivered by the public water system; and

(ii) Any other method reasonably calculated to reach other persons regularly served by the system, if they would not normally be reached by the notice required in paragraph (c)(1)(i) of this section. Such persons may include those who do not pay water bills or do not have service connection addresses (e.g., house renters, apartment dwellers, university students, nursing home patients, prison inmates, etc.). Other methods may include: Publication in a local newspaper; delivery of multiple copies for distribution by customers that provide their drinking water to others (e.g., apartment building owners or large private employers); posting in public places served by the system or on the Internet; or delivery to community organizations.

(2) Unless directed otherwise by the primacy agency in writing, non-community water systems must provide notice by:

(i) Posting the notice in conspicuous locations throughout the distribution system frequented by persons served by the system, or by mail or direct delivery to each customer and service connection (where known); and

(ii) Any other method reasonably calculated to reach other persons served by the system if they would not normally be reached by the notice required in paragraph (c)(2)(i) of this section. Such persons may include those served who may not see a posted notice because the posted notice is not in a location they routinely pass by. Other methods may include: Publication in a local newspaper or newsletter distributed to customers; use of E-mail to notify employees or students; or, delivery of multiple copies in central locations (e.g., community centers).

[65 FR 26035, May 4, 2000, as amended at 67 FR 1836, Jan. 14, 2002; 71 FR 65652, Nov. 8, 2006; 78 FR 10350, Feb. 13, 2013]

§ 141.204 *Tier 3 Public Notice*—Form, manner, and frequency of notice.

(a) *Which violations or situations require a Tier 3 public notice?* Table 1 of this section lists the violation categories and other situations requiring a Tier 3 public notice. Appendix A to this subpart identifies the tier assignment for each specific violation or situation.

TABLE 1 TO § 141.204—VIOLATION CATEGORIES AND OTHER SITUATIONS REQUIRING A TIER 3 PUBLIC NOTICE

(1) Monitoring violations under 40 CFR part 141, except where a Tier 1 notice is required under § 141.202(a) or where the primacy agency determines that a Tier 2 notice is required;
(2) Failure to comply with a testing procedure established in 40 CFR part 141, except where a Tier 1 notice is required under § 141.202(a)) or where the primacy agency determines that a Tier 2 notice is required;
(3) Operation under a variance granted under Section 1415 or an exemption granted under Section 1416 of the Safe Drinking Water Act;
(4) Availability of unregulated contaminant monitoring results, as required under § 141.207;
(5) Exceedance of the fluoride secondary maximum contaminant level (SMCL), as required under § 141.208; and
(6) Reporting and Recordkeeping violations under subpart Y of 40 CFR part 141.

(b) *When is the Tier 3 public notice to be provided?* (1) Public water systems must provide the public notice not later than one year after the public water system learns of the violation or situation or begins operating under a variance or exemption. Following the initial notice, the public water system must repeat the notice annually for as long as the violation, variance, exemption, or other situation persists. If the public notice is posted, the notice must remain in place for as long as the violation, variance, exemption, or other situation persists, but in no case less than seven days (even if the violation or situation is resolved).

(2) Instead of individual Tier 3 public notices, a public water system may use an annual report detailing all violations and situations that occurred during the previous twelve months, as long as the timing requirements of paragraph (b)(1) of this section are met.

(c) *What is the form and manner of the Tier 3 public notice?* Public water systems must provide the initial notice and any repeat notices in a form and manner that is reasonably calculated

to reach persons served in the required time period. The form and manner of the public notice may vary based on the specific situation and type of water system, but it must at a minimum meet the following requirements:

(1) Unless directed otherwise by the primacy agency in writing, community water systems must provide notice by:

(i) Mail or other direct delivery to each customer receiving a bill and to other service connections to which water is delivered by the public water system; and

(ii) Any other method reasonably calculated to reach other persons regularly served by the system, if they would not normally be reached by the notice required in paragraph (c)(1)(i) of this section. Such persons may include those who do not pay water bills or do not have service connection addresses (e.g., house renters, apartment dwellers, university students, nursing home patients, prison inmates, etc.). Other methods may include: Publication in a local newspaper; delivery of multiple copies for distribution by customers that provide their drinking water to others (e.g., apartment building owners or large private employers); posting in public places or on the Internet; or delivery to community organizations.

(2) Unless directed otherwise by the primacy agency in writing, non-community water systems must provide notice by:

(i) Posting the notice in conspicuous locations throughout the distribution system frequented by persons served by the system, or by mail or direct delivery to each customer and service connection (where known); and

(ii) Any other method reasonably calculated to reach other persons served by the system, if they would not normally be reached by the notice required in paragraph (c)(2)(i) of this section. Such persons may include those who may not see a posted notice because the notice is not in a location they routinely pass by. Other methods may include: Publication in a local newspaper or newsletter distributed to customers; use of E-mail to notify employees or students; or, delivery of multiple copies in central locations (e.g., community centers).

(d) *In what situations may the Consumer Confidence Report be used to meet the Tier 3 public notice requirements?* For community water systems, the Consumer Confidence Report (CCR) required under Subpart O of this part may be used as a vehicle for the initial Tier 3 public notice and all required repeat notices, as long as:

(1) The CCR is provided to persons served no later than 12 months after the system learns of the violation or situation as required under § 141.204(b);

(2) The Tier 3 notice contained in the CCR follows the content requirements under § 141.205; and

(3) The CCR is distributed following the delivery requirements under § 141.204(c).

[65 FR 26035, May 4, 2000; 65 FR 38629, June 21, 2000, as amended at 78 FR 10350, Feb. 13, 2013]

§ 141.205 Content of the public notice.

(a) *What elements must be included in the public notice for violations of National Primary Drinking Water Regulations (NPDWR) or other situations requiring a public notice?* When a public water system violates a NPDWR or has a situation requiring public notification, each public notice must include the following elements:

(1) A description of the violation or situation, including the contaminant(s) of concern, and (as applicable) the contaminant level(s);

(2) When the violation or situation occurred;

(3) Any potential adverse health effects from the violation or situation, including the standard language under paragraph (d)(1) or (d)(2) of this section, whichever is applicable;

(4) The population at risk, including subpopulations particularly vulnerable if exposed to the contaminant in their drinking water;

(5) Whether alternative water supplies should be used;

(6) What actions consumers should take, including when they should seek medical help, if known;

(7) What the system is doing to correct the violation or situation;

(8) When the water system expects to return to compliance or resolve the situation;

(9) The name, business address, and phone number of the water system

owner, operator, or designee of the public water system as a source of additional information concerning the notice; and

(10) A statement to encourage the notice recipient to distribute the public notice to other persons served, using the standard language under paragraph (d)(3) of this section, where applicable.

(b) *What elements must be included in the public notice for public water systems operating under a variance or exemption?* (1) If a public water system has been granted a variance or an exemption, the public notice must contain:

(i) An explanation of the reasons for the variance or exemption;

(ii) The date on which the variance or exemption was issued;

(iii) A brief status report on the steps the system is taking to install treatment, find alternative sources of water, or otherwise comply with the terms and schedules of the variance or exemption; and

(iv) A notice of any opportunity for public input in the review of the variance or exemption.

(2) If a public water system violates the conditions of a variance or exemption, the public notice must contain the ten elements listed in paragraph (a) of this section.

(c) *How is the public notice to be presented?* (1) Each public notice required by this section:

(i) Must be displayed in a conspicuous way when printed or posted;

(ii) Must not contain overly technical language or very small print;

(iii) Must not be formatted in a way that defeats the purpose of the notice;

(iv) Must not contain language which nullifies the purpose of the notice.

(2) Each public notice required by this section must comply with multilingual requirements, as follows:

(i) For public water systems serving a large proportion of non-English speaking consumers, as determined by the primacy agency, the public notice must contain information in the appropriate language(s) regarding the importance of the notice or contain a telephone number or address where persons served may contact the water system to obtain a translated copy of the notice or to request assistance in the appropriate language.

(ii) In cases where the primacy agency has not determined what constitutes a large proportion of non-English speaking consumers, the public water system must include in the public notice the same information as in paragraph (c)(2)(i) of this section, where appropriate to reach a large proportion of non-English speaking persons served by the water system.

(d) *What standard language must public water systems include in their public notice?* Public water systems are required to include the following standard language in their public notice:

(1) Standard health effects language for MCL or MRDL violations, treatment technique violations, and violations of the condition of a variance or exemption. Public water systems must include in each public notice the health effects language specified in appendix B to this subpart corresponding to each MCL, MRDL, and treatment technique violation listed in appendix A to this subpart, and for each violation of a condition of a variance or exemption.

(2) Standard language for monitoring and testing procedure violations. Public water systems must include the following language in their notice, including the language necessary to fill in the blanks, for all monitoring and testing procedure violations listed in appendix A to this subpart:

> We are required to monitor your drinking water for specific contaminants on a regular basis. Results of regular monitoring are an indicator of whether or not your drinking water meets health standards. During [compliance period], we ''did not monitor or test'' or ''did not complete all monitoring or testing'' for [contaminant(s)], and therefore cannot be sure of the quality of your drinking water during that time.

(3) Standard language to encourage the distribution of the public notice to all persons served. Public water systems must include in their notice the following language (where applicable):

> Please share this information with all the other people who drink this water, especially those who may not have received this notice directly (for example, people in apartments, nursing homes, schools, and businesses). You can do this by posting this notice in a public place or distributing copies by hand or mail.

§ 141.206 Notice to new billing units or new customers.

(a) *What is the requirement for community water systems?* Community water systems must give a copy of the most recent public notice for any continuing violation, the existence of a variance or exemption, or other ongoing situations requiring a public notice to all new billing units or new customers prior to or at the time service begins.

(b) *What is the requirement for non-community water systems?* Non-community water systems must continuously post the public notice in conspicuous locations in order to inform new consumers of any continuing violation, variance or exemption, or other situation requiring a public notice for as long as the violation, variance, exemption, or other situation persists.

§ 141.207 Special notice of the availability of unregulated contaminant monitoring results.

(a) *When is the special notice to be given?* The owner or operator of a community water system or non-transient, non-community water system required to monitor under § 141.40 must notify persons served by the system of the availability of the results of such sampling no later than 12 months after the monitoring results are known.

(b) *What is the form and manner of the special notice?* The form and manner of the public notice must follow the requirements for a Tier 3 public notice prescribed in §§ 141.204(c), (d)(1), and (d)(3). The notice must also identify a person and provide the telephone number to contact for information on the monitoring results.

§ 141.208 Special notice for exceedance of the SMCL for fluoride.

(a) *When is the special notice to be given?* Community water systems that exceed the fluoride secondary maximum contaminant level (SMCL) of 2 mg/l as specified in § 143.3 (determined by the last single sample taken in accordance with § 141.23), but do not exceed the maximum contaminant level (MCL) of 4 mg/l for fluoride (as specified in § 141.62), must provide the public notice in paragraph (c) of this section to persons served. Public notice must be provided as soon as practical but no later than 12 months from the day the water system learns of the exceedance. A copy of the notice must also be sent to all new billing units and new customers at the time service begins and to the State public health officer. The public water system must repeat the notice at least annually for as long as the SMCL is exceeded. If the public notice is posted, the notice must remain in place for as long as the SMCL is exceeded, but in no case less than seven days (even if the exceedance is eliminated). On a case-by-case basis, the primacy agency may require an initial notice sooner than 12 months and repeat notices more frequently than annually.

(b) *What is the form and manner of the special notice?* The form and manner of the public notice (including repeat notices) must follow the requirements for a Tier 3 public notice in § 141.204(c) and (d)(1) and (d)(3).

(c) *What mandatory language must be contained in the special notice?* The notice must contain the following language, including the language necessary to fill in the blanks:

This is an alert about your drinking water and a cosmetic dental problem that might affect children under nine years of age. At low levels, fluoride can help prevent cavities, but children drinking water containing more than 2 milligrams per liter (mg/l) of fluoride may develop cosmetic discoloration of their permanent teeth (dental fluorosis). The drinking water provided by your community water system [*name*] has a fluoride concentration of [*insert value*] mg/l.

Dental fluorosis, in its moderate or severe forms, may result in a brown staining and/or pitting of the permanent teeth. This problem occurs only in developing teeth, before they erupt from the gums. Children under nine should be provided with alternative sources of drinking water or water that has been treated to remove the fluoride to avoid the possibility of staining and pitting of their permanent teeth. You may also want to contact your dentist about proper use by young children of fluoride-containing products. Older children and adults may safely drink the water.

Drinking water containing more than 4 mg/L of fluoride (the U.S. Environmental Protection Agency's drinking water standard) can increase your risk of developing bone disease. Your drinking water does not contain more than 4 mg/l of fluoride, but we're required to notify you when we discover that the fluoride levels in your drinking water exceed 2 mg/l because of this cosmetic dental problem.

For more information, please call [name of water system contact] of [name of community water system] at [phone number]. Some home water treatment units are also available to remove fluoride from drinking water. To learn more about available home water treatment units, you may call NSF International at 1–877–8–NSF–HELP.''

§ 141.209 Special notice for nitrate exceedances above MCL by non-community water systems (NCWS), where granted permission by the primacy agency under § 141.11(d).

(a) *When is the special notice to be given?* The owner or operator of a non-community water system granted permission by the primacy agency under § 141.11(d) to exceed the nitrate MCL must provide notice to persons served according to the requirements for a Tier 1 notice under § 141.202(a) and (b).

(b) *What is the form and manner of the special notice?* Non-community water systems granted permission by the primacy agency to exceed the nitrate MCL under § 141.11(d) must provide continuous posting of the fact that nitrate levels exceed 10 mg/l and the potential health effects of exposure, according to the requirements for Tier 1 notice delivery under § 141.202(c) and the content requirements under § 141.205.

§ 141.210 Notice by primacy agency on behalf of the public water system.

(a) *May the primacy agency give the notice on behalf of the public water system?* The primacy agency may give the notice required by this subpart on behalf of the owner and operator of the public water system if the primacy agency complies with the requirements of this subpart.

(b) *What is the responsibility of the public water system when notice is given by the primacy agency?* The owner or operator of the public water system remains responsible for ensuring that the requirements of this subpart are met.

§ 141.211 Special notice for repeated failure to conduct monitoring of the source water for *Cryptosporidium* and for failure to determine bin classification or mean *Cryptosporidium* level.

(a) *When is the special notice for repeated failure to monitor to be given?* The owner or operator of a community or non-community water system that is required to monitor source water under § 141.701 must notify persons served by the water system that monitoring has not been completed as specified no later than 30 days after the system has failed to collect any 3 months of monitoring as specified in § 141.701(c). The notice must be repeated as specified in § 141.203(b).

(b) *When is the special notice for failure to determine bin classification or mean Cryptosporidium level to be given?* The owner or operator of a community or non-community water system that is required to determine a bin classification under § 141.710, or to determine mean *Cryptosporidium* level under § 141.712, must notify persons served by the water system that the determination has not been made as required no later than 30 days after the system has failed report the determination as specified in § 141.710(e) or § 141.712(a), respectively. The notice must be repeated as specified in § 141.203(b). The notice is not required if the system is complying with a State-approved schedule to address the violation.

(c) *What is the form and manner of the special notice?* The form and manner of the public notice must follow the requirements for a Tier 2 public notice prescribed in § 141.203(c). The public notice must be presented as required in § 141.205(c).

(d) *What mandatory language must be contained in the special notice?* The notice must contain the following language, including the language necessary to fill in the blanks.

(1) The special notice for repeated failure to conduct monitoring must contain the following language:

We are required to monitor the source of your drinking water for *Cryptosporidium*. Results of the monitoring are to be used to determine whether water treatment at the (treatment plant name) is sufficient to adequately remove *Cryptosporidium* from your drinking water. We are required to complete this monitoring and make this determination by (required bin determination date). We ''did not monitor or test'' or ''did not complete all monitoring or testing'' on schedule and, therefore, we may not be able to determine by the required date what treatment modifications, if any, must be made to ensure adequate *Cryptosporidium* removal. Missing this deadline may, in turn, jeopardize our ability to have the required

treatment modifications, if any, completed by the deadline required, (date).

For more information, please call (name of water system contact) of (name of water system) at (phone number).

(2) The special notice for failure to determine bin classification or mean *Cryptosporidium* level must contain the following language:

We are required to monitor the source of your drinking water for *Cryptosporidium* in order to determine by (date) whether water treatment at the (treatment plant name) is sufficient to adequately remove *Cryptosporidium* from your drinking water. We have not made this determination by the required date. Our failure to do this may jeopardize our ability to have the required treatment modifications, if any, completed by the required deadline of (date). For more information, please call (name of water system contact) of (name of water system) at (phone number).

(3) Each special notice must also include a description of what the system is doing to correct the violation and when the system expects to return to compliance or resolve the situation.

[71 FR 768, Jan. 5, 2006]

APPENDIX A TO SUBPART Q OF PART 141—NPDWR VIOLATIONS AND OTHER SITUATIONS REQUIRING PUBLIC NOTICE [1]

Contaminant	MCL/MRDL/TT violations [2]		Monitoring & testing procedure violations	
	Tier of public notice required	Citation	Tier of public notice required	Citation
I. Violations of National Primary Drinking Water Regulations (NPDWR): [3].				
A. Microbiological Contaminants.				
1.a Total coliform bacteria†	2	141.63(a)	3	141.21(a)–(e).
1.b Total coliform (TT violations resulting from failure to perform assessments or corrective actions, monitoring violations, and reporting violations)‡	2	141.860(b)(1)	3	141.860(c)(1). 141.860(d)(1).
1.c Seasonal system failure to follow State-approved start-up plan prior to serving water to the public or failure to provide certification to State‡	2	141.860(b)(2)	3	141.860(d)(3).
2.a Fecal coliform/*E. coli*†	1	141.63(b)	[4] 1,3	141.21(e)
2.b *E. coli* (MCL, monitoring, and reporting violations)‡	1	141.860 (a)	3	141.860(c)(2) 141.860(d)(1). 141.860(d)(2).
2.c *E. coli* (TT violations resulting from failure to perform level 2 Assessments or corrective action)‡	2	141.860(b)(1)		
3. Turbidity MCL	2	141.13(a)	3	141.22
4. Turbidity MCL (average of 2 days' samples >5 NTU)	[5] 2, 1	141.13(b)	3	141.22
5. Turbidity (for TT violations resulting from a single exceedance of maximum allowable turbidity level)	[6] 2, 1	141.71(a)(2), 141.71(c)(2)(i), 141.73(a)(2), 141.73 (b)(2), 141.73 (c)(2), 141.73(d), 141.173(a)(2), 141.173(b), 141.551(b)	3	141.74(a)(1), 141.74(b)(2), 141.74(c)(1), 141.174, 141.560(a)–(c), 141.561.
6. Surface Water Treatment Rule violations, other than violations resulting from single exceedance of max. allowable turbidity level (TT)	2	141.70–141.73	3	141.74
7. Interim Enhanced Surface Water Treatment Rule violations, other than violations resulting from single exceedance of max. turbidity level (TT)	[7] 2	141.170–141.173, 141.500–141.553	3	141.172, 141.174, 141.530–141.544, 141.560–141.564.
8. Filter Backwash Recycling Rule violations	2	141.76(c)	3	141.76(b), (d)
9. Long Term 1 Enhanced Surface Water Treatment Rule violations	2	141.500–141.553	3	141.530–141.544, 141.560–141.564.
10. LT2ESWTR violations	2	141.710–141.720	[22] 2, 3	141.701–141.705 and 141.708–141.709.
11. Ground Water Rule violations	2	141.404	3	141.402(h), 141.403(d).
B. Inorganic Chemicals (IOCs)				
1. Antimony	2	141.62(b)	3	141.23(a), (c)

Contaminant	MCL/MRDL/TT violations [2]		Monitoring & testing procedure violations	
	Tier of public notice required	Citation	Tier of public notice required	Citation
2. Arsenic	2	[8] 141.62(b)	3	[11] 141.23(a), (c)
3. Asbestos (fibers >10 μm)	2	141.62(b)	3	141.23(a)–(b)
4. Barium	2	141.62(b)	3	141.23(a), (c)
5. Beryllium	2	141.62(b)	3	141.23(a), (c)
6. Cadmium	2	141.62(b)	3	141.23(a), (c)
7. Chromium (total)	2	141.62(b)	3	141.23(a), (c)
8. Cyanide	2	141.62(b)	3	141.23(a), (c)
9. Fluoride	2	141.62(b)	3	141.23(a), (c)
10. Mercury (inorganic)	2	141.62(b)	3	141.23(a), (c)
11. Nitrate	1	141.62(b)	[12] 1, 3	141.23(a), (d), 141.23(f)(2)
12. Nitrite	1	141.62(b)	[12] 1, 3	141.23(a), (e), 141.23(f)(2)
13. Total Nitrate and Nitrite	1	141.62(b)	3	141.23(a)
14. Selenium	2	141.62(b)	3	141.23(a), (c)
15. Thallium	2	141.62(b)	3	141.23(a), (c)
C. Lead and Copper Rule (Action Level for lead is 0.015 mg/L, for copper is 1.3 mg/L)				
1. Lead and Copper Rule (TT)	2	141.80–141.85	3	141.86–141.89
D. Synthetic Organic Chemicals (SOCs)				
1. 2,4–D	2	141.61(c)	3	141.24(h)
2. 2,4,5–TP (Silvex)	2	141.61(c)	3	141.24(h)
3. Alachlor	2	141.61(c)	3	141.24(h)
4. Atrazine	2	141.61(c)	3	141.24(h)
5. Benzo(a)pyrene (PAHs)	2	141.61(c)	3	141.24(h)
6. Carbofuran	2	141.61(c)	3	141.24(h)
7. Chlordane	2	141.61(c)	3	141.24(h)
8. Dalapon	2	141.61(c)	3	141.24(h)
9. Di (2-ethylhexyl) adipate	2	141.61(c)	3	141.24(h)
10. Di (2-ethylhexyl) phthalate	2	141.61(c)	3	141.24(h)
11. Dibromochloropropane	2	141.61(c)	3	141.24(h)
12. Dinoseb	2	141.61(c)	3	141.24(h)
13. Dioxin (2,3,7,8-TCDD)	2	141.61(c)	3	141.24(h)
14. Diquat	2	141.61(c)	3	141.24(h)
15. Endothall	2	141.61(c)	3	141.24(h)
16. Endrin	2	141.61(c)	3	141.24(h)
17. Ethylene dibromide	2	141.61(c)	3	141.24(h)
18. Glyphosate	2	141.61(c)	3	141.24(h)
19. Heptachlor	2	141.61(c)	3	141.24(h)
20. Heptachlor epoxide	2	141.61(c)	3	141.24(h)
21. Hexachlorobenzene	2	141.61(c)	3	141.24(h)
22. Hexachlorocyclo-pentadiene	2	141.61(c)	3	141.24(h)
23. Lindane	2	141.61(c)	3	141.24(h)
24. Methoxychlor	2	141.61(c)	3	141.24(h)
25. Oxamyl (Vydate)	2	141.61(c)	3	141.24(h)
26. Pentachlorophenol	2	141.61(c)	3	141.24(h)

27. Picloram	2	141.61(c)	3	141.24(h)
28. Polychlorinated biphenyls (PCBs)	2	141.61(c)	3	141.24(h)
29. Simazine	2	141.61(c)	3	141.24(h)
30. Toxaphene	2	141.61(c)	3	141.24(h)
E. Volatile Organic Chemicals (VOCs)				
1. Benzene	2	141.61(a)	3	141.24(f)
2. Carbon tetrachloride	2	141.61(a)	3	141.24(f)
3. Chlorobenzene (monochlorobenzene)	2	141.61(a)	3	141.24(f)
4. o-Dichlorobenzene	2	141.61(a)	3	141.24(f)
5. p-Dichlorobenzene	2	141.61(a)	3	141.24(f)
6. 1,2-Dichloroethane	2	141.61(a)	3	141.24(f)
7. 1,1-Dichloroethylene	2	141.61(a)	3	141.24(f)
8. cis-1,2-Dichloroethylene	2	141.61(a)	3	141.24(f)
9. trans-1,2-Dichloroethylene	2	141.61(a)	3	141.24(f)
10. Dichloromethane	2	141.61(a)	3	141.24(f)
11. 1,2-Dichloropropane	2	141.61(a)	3	141.24(f)
12. Ethylbenzene	2	141.61(a)	3	141.24(f)
13. Styrene	2	141.61(a)	3	141.24(f)
14. Tetrachloroethylene	2	141.61(a)	3	141.24(f)
15. Toluene	2	141.61(a)	3	141.24(f)
16. 1,2,4-Trichlorobenzene	2	141.61(a)	3	141.24(f)
17. 1,1,1-Trichloroethane	2	141.61(a)	3	141.24(f)
18. 1,1,2-Trichloroethane	2	141.61(a)	3	141.24(f)
19. Trichloroethylene	2	141.61(a)	3	141.24(f)
20. Vinyl chloride	2	141.61(a)	3	141.24(f)
21. Xylenes (total)	2	141.61(a)	3	141.24(f)
F. Radioactive Contaminants				
1. Beta/photon emitters	2	141.66(d)	3	141.25(a) 141.26(b)
2. Alpha emitters	2	141.66(c)	3	141.25(a) 141.26(a)
3. Combined radium (226 and 228)	2	141.66(b)	3	141.25(a) 141.26(a)
4. Uranium	[9] 2	141.66(e)	[10] 3	141.25(a) 141.26(a)
G. Disinfection Byproducts (DBPs), Byproduct Precursors, Disinfectant Residuals. Where disinfection is used in the treatment of drinking water, disinfectants combine with organic and inorganic matter present in water to form chemicals called disinfection byproducts (DBPs). EPA sets standards for controlling the levels of disinfectants and DBPs in drinking water, including trihalomethanes (THMs) and haloacetic acids (HAAs).[13]				
1. Total trihalomethanes (TTHMs)	2	[14] 141.64(b)	3	141.132(a)–(b), 141.600–141.605, 141.620–141.629
2. Haloacetic Acids (HAA5)	2	141.64(b)	3	141.132(a)–(b), 141.600–141.605, 141.620–141.629
3. Bromate	2	141.64(a)	3	141.132(a)–(b)
4. Chlorite	2	141.64(a)	3	141.132(a)–(b)
5. Chlorine (MRDL)	2	141.65(a)	3	141.132(a), (c)
6. Chloramine (MRDL)	2	141.65(a)	3	141.132(a), (c)

Contaminant	MCL/MRDL/TT violations [2]		Monitoring & testing procedure violations	
	Tier of public notice required	Citation	Tier of public notice required	Citation
7. Chlorine dioxide (MRDL), where any 2 consecutive daily samples at entrance to distribution system only are above MRDL	2	141.65(a), 141.133(c)(3)	2 [15], 3	141.132(a), (c), 141.133(c)(2)
8. Chlorine dioxide (MRDL), where sample(s) in distribution system the next day are also above MRDL	[16] 1	141.65(a), 141.133(c)(3)	1	141.132(a), (c), 141.133(c)(2)
9. Control of DBP precursors—TOC (TT)	2	141.135(a)–(b)	3	141.132(a), (d)
10. Bench marking and disinfection profiling	N/A	N/A	3	141.172 141.530–141.544.
11. Development of monitoring plan	N/A	N/A	3	141.132(f)
H. Other Treatment Techniques				
1. Acrylamide (TT)	2	141.111	N/A	N/A
2. Epichlorohydrin (TT)	2	141.111	N/A	N/A
II. Unregulated Contaminant Monitoring: [17]				
A. Unregulated contaminants	N/A	N/A	3	141.40
B. Nickel	N/A	N/A	3	141.23(c), (k)
III. Public Notification for Variances and Exemptions:				
A. Operation under a variance or exemption	3	[18] 1415, 1416,	N/A	N/A
B. Violation of conditions of a variance or exemption	2	1415, 1416, [19] 142.307	N/A	N/A
IV. Other Situations Requiring Public Notification:				
A. Fluoride secondary maximum contaminant level (SMCL) exceedance	3	143.3	N/A	N/A
B. Exceedance of nitrate MCL for non-community systems, as allowed by primacy agency	1	141.11(d)	N/A	N/A
C. Availability of unregulated contaminant monitoring data	3	141.40	N/A	N/A
D. Waterborne disease outbreak	1	141.2, 141.71(c)(2)(ii)	N/A	N/A
E. Other waterborne emergency [20]	1	N/A	N/A	N/A
F. Source Water Sample Positive for GWR Fecal indicators: E. coli, enterococci, or coliphage	1	141.402(g)	N/A	N/A
G. Other situations as determined by primacy agency	[21] 1, 2, 3	N/A	N/A	N/A

APPENDIX A—ENDNOTES

† Until March 31, 2016.

‡ Beginning April 1, 2016.

1. Violations and other situations not listed in this table (e.g., failure to prepare Consumer Confidence Reports), do not require notice, unless otherwise determined by the primacy agency. Primacy agencies may, at their option, also require a more stringent public notice tier (e.g., Tier 1 instead of Tier 2 or Tier 2 instead of Tier 3) for specific violations and situations listed in this Appendix, as authorized under §141.202(a) and §141.203(a).

2. MCL—Maximum contaminant level, MRDL—Maximum residual disinfectant level, TT—Treatment technique

3. The term Violations of National Primary Drinking Water Regulations (NPDWR) is used here to include violations of MCL, MRDL, treatment technique, monitoring, and testing procedure requirements.

4. Failure to test for fecal coliform or E. coli is a Tier 1 violation if testing is not done after any repeat sample tests positive for coliform. All other total coliform monitoring and testing procedure violations are Tier 3.

5. Systems that violate the turbidity MCL of 5 NTU based on an average of measurements over two consecutive days must consult with the primacy agency within 24 hours after learning of the violation. Based on this consultation, the primacy agency may subsequently decide to elevate the violation to Tier 1. If a system is unable to make contact with the primacy agency in the 24-hour period, the violation is automatically elevated to Tier 1.

6. Systems with treatment technique violations involving a single exceedance of a maximum turbidity limit under the Surface Water Treatment Rule (SWTR), the Interim Enhanced Surface Water Treatment Rule (IESWTR), or the Long Term 1 Enhanced Surface Water Treatment Rule (LT1ESWTR) are required to consult with the primacy agency within 24 hours after learning of the violation. Based on this consultation, the primacy agency may subsequently decide to elevate the violation to Tier 1. If a system is unable to make contact with the primacy agency in the 24-hour period, the violation is automatically elevated to Tier 1.

7. Most of the requirements of the Interim Enhanced Surface Water Treatment Rule (63 *FR* 69477) (§§141.170–141.171, 141.173–141.174) become effective January 1, 2002 for Subpart H systems (surface water systems and ground water systems under the direct influence of surface water) serving at least 10,000 persons. However, §141.172 has some requirements that become effective as early as April 16, 1999. The Surface Water Treatment Rule remains in effect for systems serving at least 10,000 persons even after 2002; the Interim Enhanced Surface Water Treatment Rule adds additional requirements and does not in many cases supercede the SWTR.

8. The arsenic MCL citations are effective January 23, 2006. Until then, the citations are §141.11(b) and §141.23(n).

9. The uranium MCL Tier 2 violation citations are effective December 8, 2003 for all community water systems.

10. The uranium Tier 3 violation citations are effective December 8, 2000 for all community water systems.

11. The arsenic Tier 3 violation MCL citations are effective January 23, 2006. Until then, the citations are §141.23(a), (l).

12. Failure to take a confirmation sample within 24 hours for nitrate or nitrite after an initial sample exceeds the MCL is a Tier 1 violation. Other monitoring violations for nitrate are Tier 3.

13. Subpart H community and non-transient non-community systems serving ≥10,000 must comply with new DBP MCLs, disinfectant MRDLs, and related monitoring requirements beginning January 1, 2002. All other community and non-transient non-community systems must meet the MCLs and MRDLs beginning January 1, 2004. Subpart H transient non-community systems serving 10,000 or more persons and using chlorine dioxide as a disinfectant or oxidant must comply with the chlorine dioxide MRDL beginning January 1, 2002. Subpart H transient non-community systems serving fewer than 10,000 persons and using only ground water not under the direct influence of surface water and using chlorine dioxide as a disinfectant or oxidant must comply with the chlorine dioxide MRDL beginning January 1, 2004.

14. §§141.64(b)(1) 141.132(a)–(b) apply until §§141.620–141.630 take effect under the schedule in §141.620(c).

15. Failure to monitor for chlorine dioxide at the entrance to the distribution system the day after exceeding the MRDL at the entrance to the distribution system is a Tier 2 violation.

16. If any daily sample taken at the entrance to the distribution system exceeds the MRDL for chlorine dioxide and one or more samples taken in the distribution system the next day exceed the MRDL, Tier 1 notification is required. Failure to take the required samples in the distribution system after the MRDL is exceeded at the entry point also triggers Tier 1 notification.

17. Some water systems must monitor for certain unregulated contaminants listed in §141.40.

18. This citation refers to §§1415 and 1416 of the Safe Drinking Water Act. §§1415 and 1416 require that ''a schedule prescribed. . . for a public water system granted a variance [or exemption] shall require compliance by the system. . .''

19. In addition to §§1415 and 1416 of the Safe Drinking Water Act, 40 CFR 142.307 specifies the items and schedule milestones that must be included in a variance for small systems.

20. Other waterborne emergencies require a Tier 1 public notice under §141.202(a) for situations that do not meet the definition of a waterborne disease outbreak given in 40 CFR 141.2 but that still have the potential to have serious adverse effects on health as a result of short-term exposure. These could include outbreaks not related to treatment deficiencies, as well as situations that have the potential to cause outbreaks, such as failures or significant interruption in water treatment processes, natural disasters that disrupt the water supply or distribution system, chemical spills, or unexpected loading of possible pathogens into the source water.

21. Primacy agencies may place other situations in any tier they believe appropriate, based on threat to public health.

22. Failure to collect three or more samples for *Cryptosporidium* analysis is a Tier 2 violation requiring special notice as specified in §141.211. All other monitoring and testing procedure violations are Tier 3.

[65 FR 26035, May 4, 2000, as amended at 65 FR 76750, Dec. 7, 2000; 66 FR 7065, Jan. 22, 2001; 66 FR 31104, June 8, 2001; 67 FR 1836, Jan. 14, 2002; 69 FR 38856, June 29, 2004; 71 FR 483, Jan. 4, 2006; 71 FR 768, Jan. 5, 2006; 71 FR 65652, Nov. 8, 2006; 78 FR 10350, Feb. 13, 2013; 79 FR 10669, Feb. 26, 2014]

Appendix B to Subpart Q of Part 141—Standard Health Effects Language for Public Notification

Contaminant	MCLG [1] mg/L	MCL [2] mg/L	Standard health effects language for public notification
National Primary Drinking Water Regulations (NPDWR) A. Microbiological Contaminants			
1a. Total coliform †	Zero	See footnote [3]	Coliforms are bacteria that are naturally present in the environment and are used as an indicator that other, potentially-harmful, bacteria may be present. Coliforms were found in more samples than allowed and this was a warning of potential problems.
1b. Fecal coliform/*E. coli* †	Zero	Zero	Fecal coliforms and *E. coli* are bacteria whose presence indicates that the water may be contaminated with human or animal wastes. Microbes in these wastes can cause short-term effects, such as diarrhea, cramps, nausea, headaches, or other symptoms. They may pose a special health risk for infants, young children, some of the elderly, and people with severely compromised immune systems.
1c. Fecal indicators (GWR): i. E. coli ii. enterococci iii. coliphage	Zero None None	TT TT TT	Fecal indicators are microbes whose presence indicates that the water may be contaminated with human or animal wastes. Microbes in these wastes can cause short-term health effects, such as diarrhea, cramps, nausea, headaches, or other symptoms. They may pose a special health risk for infants, young children, some of the elderly, and people with severely compromised immune systems.
1d. Ground Water Rule (GWR) TT violations	None	TT	Inadequately treated or inadequately protected water may contain disease-causing organisms. These organisms can cause symptoms such as diarrhea, nausea, cramps, and associated headaches.
1e. Subpart Y Coliform Assessment and/or Corrective Action Violations ‡.	N/A	TT	Coliforms are bacteria that are naturally present in the environment and are used as an indicator that other, potentially harmful, waterborne pathogens may be present or that a potential pathway exists through which contamination may enter the drinking water distribution system. We found coliforms indicating the need to look for potential problems in water treatment or distribution. When this occurs, we are required to conduct assessments to identify problems and to correct any problems that are found. [THE SYSTEM MUST USE THE FOLLOWING APPLICABLE SENTENCES.] We failed to conduct the required assessment. We failed to correct all identified sanitary defects that were found during the assessment(s).
1f. Subpart Y *E.coli* Assessment and/or Corrective Action Violations ‡.	N/A	TT	*E. coli* are bacteria whose presence indicates that the water may be contaminated with human or animal wastes. Human pathogens in these wastes can cause short-term effects, such as diarrhea, cramps, nausea, headaches, or other symptoms. They may pose a greater health risk for infants, young children, the elderly, and people with severely compromised immune systems. We violated the standard for *E. coli,* indicating the need to look for potential problems in water treatment or distribution. When this occurs, we are required to conduct a detailed assessment to identify problems and to correct any problems that are found. [THE SYSTEM MUST USE THE FOLLOWING APPLICABLE SENTENCES.] We failed to conduct the required assessment. We failed to correct all identified sanitary defects that were found during the assessment that we conducted.

Contaminant	MCLG [1] mg/L	MCL [2] mg/L	Standard health effects language for public notification
1g. *E. coli* ‡	Zero	In compliance unless one of the following conditions occurs: (1) The system has an *E. coli*-positive repeat sample following a total coliform-positive routine sample. (2) The system has a total coliform-positive repeat sample following an *E. coli*-positive routine sample. (3) The system fails to take all required repeat samples following an *E. coli*-positive routine sample. (4) The system fails to test for *E. coli* when any repeat sample tests positive for total coliform.	*E. coli* are bacteria whose presence indicates that the water may be contaminated with human or animal wastes. Human pathogens in these wastes can cause short-term effects, such as diarrhea, cramps, nausea, headaches, or other symptoms. They may pose a greater health risk for infants, young children, the elderly, and people with severely compromised immune systems.
1h. Subpart Y Seasonal System TT Violations ‡	N/A	TT	When this violation includes the failure to monitor for total coliforms or *E. coli* prior to serving water to the public, the mandatory language found at 141.205(d)(2) must be used. When this violation includes failure to complete other actions, the appropriate elements found in 141.205(a) to describe the violation must be used.
2a. Turbidity (MCL) [4]	None	1 NTU [5]/5 NTU	Turbidity has no health effects. However, turbidity can interfere with disinfection and provide a medium for microbial growth. Turbidity may indicate the presence of disease-causing organisms. These organisms include bacteria, viruses, and parasites that can cause symptoms such as nausea, cramps, diarrhea and associated headaches.
2b. Turbidity (SWTR TT) [6]	None	TT [7]	Turbidity has no health effects. However, turbidity can interfere with disinfection and provide a medium for microbial growth. Turbidity may indicate the presence of disease-causing organisms. These organisms include bacteria, viruses, and parasites that can cause symptoms such as nausea, cramps, diarrhea and associated headaches.

2c. Turbidity (IESWTR TT and LT1ESWTR TT)[8]	None	TT	Turbidity has no health effects. However, turbidity can interfere with disinfection and provide a medium for microbial growth. Turbidity may indicate the presence of disease-causing organisms. These organisms include bacteria, viruses, and parasites that can cause symptoms such as nausea, cramps, diarrhea and associated headaches.
B. Surface Water Treatment Rule (SWTR), Interim Enhanced Surface Water Treatment Rule (IESWTR), Long Term 1 Enhanced Surface Water Treatment Rule (LT1ESWTR) and the Filter Backwash Recycling Rule (FBRR) violations			
3. Giardia lamblia (SWTR/IESWTR/LT1ESWTR) 4. Viruses (SWTR/IESWTR/LT1ESWTR). 5. Heterotrophic plate count (HPC) bacteria[9] (SWTR/IESWTR/LT1ESWTR). 6. Legionella (SWTR/IESWTR/LT1ESWTR). 7. Cryptosporidium (IESWTR/FBRR/LT1ESWTR).	Zero	TT[10]	Inadequately treated water may contain disease-causing organisms. These organisms include bacteria, viruses, and parasites which can cause symptoms such as nausea, cramps, diarrhea, and associated headaches.
C. Inorganic Chemicals (IOCs)			
8. Antimony	0.006	0.006	Some people who drink water containing antimony well in excess of the MCL over many years could experience increases in blood cholesterol and decreases in blood sugar.
9. Arsenic[11]	0	0.010	Some people who drink water containing arsenic in excess of the MCL over many years could experience skin damage or problems with their circulatory system, and may have an increased risk of getting cancer.
10. Asbestos (10 μm)	7 MFL[12]	7 MFL	Some people who drink water containing asbestos in excess of the MCL over many years may have an increased risk of developing benign intestinal polyps.
11. Barium	2	2	Some people who drink water containing barium in excess of the MCL over many years could experience an increase in their blood pressure.
12. Beryllium	0.004	0.004	Some people who drink water containing beryllium well in excess of the MCL over many years could develop intestinal lesions.
13. Cadmium	0.005	0.005	Some people who drink water containing cadmium in excess of the MCL over many years could experience kidney damage.
14. Chromium (total)	0.1	0.1	Some people who use water containing chromium well in excess of the MCL over many years could experience allergic dermatitis.
15. Cyanide	0.2	0.2	Some people who drink water containing cyanide well in excess of the MCL over many years could experience nerve damage or problems with their thyroid.
16. Fluoride	4.0	4.0	Some people who drink water containing fluoride in excess of the MCL over many years could get bone disease, including pain and tenderness of the bones. Fluoride in drinking water at half the MCL or more may cause mottling of children's teeth, usually in children less than nine years old. Mottling, also known as dental fluorosis, may include brown staining and/or pitting of the teeth, and occurs only in developing teeth before they erupt from the gums.
17. Mercury (inorganic)	0.002	0.002	Some people who drink water containing inorganic mercury well in excess of the MCL over many years could experience kidney damage.
18. Nitrate	10	10	Infants below the age of six months who drink water containing nitrate in excess of the MCL could become seriously ill and, if untreated, may die. Symptoms include shortness of breath and blue baby syndrome.
19. Nitrite	1	1	Infants below the age of six months who drink water containing nitrite in excess of the MCL could become seriously ill and, if untreated, may die. Symptoms include shortness of breath and blue baby syndrome.

Contaminant	MCLG [1] mg/L	MCL [2] mg/L	Standard health effects language for public notification
20. Total Nitrate and Nitrite	10	10	Infants below the age of six months who drink water containing nitrate and nitrite in excess of the MCL could become seriously ill and, if untreated, may die. Symptoms include shortness of breath and blue baby syndrome.
21. Selenium	0.05	0.05	Selenium is an essential nutrient. However, some people who drink water containing selenium in excess of the MCL over many years could experience hair or fingernail losses, numbness in fingers or toes, or problems with their circulation.
22. Thallium	0.0005	0.002	Some people who drink water containing thallium in excess of the MCL over many years could experience hair loss, changes in their blood, or problems with their kidneys, intestines, or liver.
D. Lead and Copper Rule			
23. Lead	Zero	TT [13]	Infants and children who drink water containing lead in excess of the action level could experience delays in their physical or mental development. Children could show slight deficits in attention span and learning abilities. Adults who drink this water over many years could develop kidney problems or high blood pressure.
24. Copper	1.3	TT [14]	Copper is an essential nutrient, but some people who drink water containing copper in excess of the action level over a relatively short amount of time could experience gastrointestinal distress. Some people who drink water containing copper in excess of the action level over many years could suffer liver or kidney damage. People with Wilson's Disease should consult their personal doctor.
E. Synthetic Organic Chemicals (SOCs)			
25. 2,4–D	0.07	0.07	Some people who drink water containing the weed killer 2,4–D well in excess of the MCL over many years could experience problems with their kidneys, liver, or adrenal glands.
26. 2,4,5–TP (Silvex)	0.05	0.05	Some people who drink water containing silvex in excess of the MCL over many years could experience liver problems.
27. Alachlor	Zero	0.002	Some people who drink water containing alachlor in excess of the MCL over many years could have problems with their eyes, liver, kidneys, or spleen, or experience anemia, and may have an increased risk of getting cancer.
28. Atrazine	0.003	0.003	Some people who drink water containing atrazine well in excess of the MCL over many years could experience problems with their cardiovascular system or reproductive difficulties.
29. Benzo(a)pyrene (PAHs)	Zero	0.0002	Some people who drink water containing benzo(a)pyrene in excess of the MCL over many years may experience reproductive difficulties and may have an increased risk of getting cancer.
30. Carbofuran	0.04	0.04	Some people who drink water containing carbofuran in excess of the MCL over many years could experience problems with their blood, or nervous or reproductive systems.
31. Chlordane	Zero	0.002	Some people who drink water containing chlordane in excess of the MCL over many years could experience problems with their liver or nervous system, and may have an increased risk of getting cancer.
32. Dalapon	0.2	0.2	Some people who drink water containing dalapon well in excess of the MCL over many years could experience minor kidney changes.
33. Di(2-ethylhexyl) adipate	0.4	0.4	Some people who drink water containing di(2-ethylhexyl) adipate well in excess of the MCL over many years could experience toxic effects such as weight loss, liver enlargement or possible reproductive difficulties.

34. Di(2-ethylhexyl) phthalate	Zero	0.006	Some people who drink water containing di(2-ethylhexyl) phthalate well in excess of the MCL over many years may have problems with their liver, or experience reproductive difficulties, and may have an increased risk of getting cancer.
35. Dibromochloropropane (DBCP)	Zero	0.0002	Some people who drink water containing DBCP in excess of the MCL over many years could experience reproductive difficulties and may have an increased risk of getting cancer.
36. Dinoseb	0.007	0.007	Some people who drink water containing dinoseb well in excess of the MCL over many years could experience reproductive difficulties.
37. Dioxin (2,3,7,8-TCDD)	Zero	3×10^{-8}	Some people who drink water containing dioxin in excess of the MCL over many years could experience reproductive difficulties and may have an increased risk of getting cancer.
38. Diquat	0.02	0.02	Some people who drink water containing diquat in excess of the MCL over many years could get cataracts.
39. Endothall	0.1	0.1	Some people who drink water containing endothall in excess of the MCL over many years could experience problems with their stomach or intestines.
40. Endrin	0.002	0.002	Some people who drink water containing endrin in excess of the MCL over many years could experience liver problems.
41. Ethylene dibromide	Zero	0.00005	Some people who drink water containing ethylene dibromide in excess of the MCL over many years could experience problems with their liver, stomach, reproductive system, or kidneys, and may have an increased risk of getting cancer.
42. Glyphosate	0.7	0.7	Some people who drink water containing glyphosate in excess of the MCL over many years could experience problems with their kidneys or reproductive difficulties.
43. Heptachlor	Zero	0.0004	Some people who drink water containing heptachlor in excess of the MCL over many years could experience liver damage and may have an increased risk of getting cancer.
44. Heptachlor epoxide	Zero	0.0002	Some people who drink water containing heptachlor epoxide in excess of the MCL over many years could experience liver damage, and may have an increased risk of getting cancer.
45. Hexachlorobenzene	Zero	0.001	Some people who drink water containing hexachlorobenzene in excess of the MCL over many years could experience problems with their liver or kidneys, or adverse reproductive effects, and may have an increased risk of getting cancer.
46. Hexachlorocyclo-pentadiene	0.05	0.05	Some people who drink water containing hexachlorocyclopentadiene well in excess of the MCL over many years could experience problems with their kidneys or stomach.
47. Lindane	0.0002	0.0002	Some people who drink water containing lindane in excess of the MCL over many years could experience problems with their kidneys or liver.
48. Methoxychlor	0.04	0.04	Some people who drink water containing methoxychlor in excess of the MCL over many years could experience reproductive difficulties.
49. Oxamyl (Vydate)	0.2	0.2	Some people who drink water containing oxamyl in excess of the MCL over many years could experience slight nervous system effects.
50. Pentachlorophenol	Zero	0.001	Some people who drink water containing pentachlorophenol in excess of the MCL over many years could experience problems with their liver or kidneys, and may have an increased risk of getting cancer.
51. Picloram	0.5	0.5	Some people who drink water containing picloram in excess of the MCL over many years could experience problems with their liver.
52. Polychlorinated biphenyls (PCBs)	Zero	0.0005	Some people who drink water containing PCBs in excess of the MCL over many years could experience changes in their skin, problems with their thymus gland, immune deficiencies, or reproductive or nervous system difficulties, and may have an increased risk of getting cancer.
53. Simazine	0.004	0.004	Some people who drink water containing simazine in excess of the MCL over many years could experience problems with their blood.
54. Toxaphene	Zero	0.003	Some people who drink water containing toxaphene in excess of the MCL over many years could have problems with their kidneys, liver, or thyroid, and may have an increased risk of getting cancer.

Contaminant	MCLG [1] mg/L	MCL [2] mg/L	Standard health effects language for public notification
F. Volatile Organic Chemicals (VOCs)			
55. Benzene	Zero	0.005	Some people who drink water containing benzene in excess of the MCL over many years could experience anemia or a decrease in blood platelets, and may have an increased risk of getting cancer.
56. Carbon tetrachloride	Zero	0.005	Some people who drink water containing carbon tetrachloride in excess of the MCL over many years could experience problems with their liver and may have an increased risk of getting cancer.
57. Chlorobenzene (monochloro- benzene)	0.1	0.1	Some people who drink water containing chlorobenzene in excess of the MCL over many years could experience problems with their liver or kidneys.
58. *o*-Dichlorobenzene	0.6	0.6	Some people who drink water containing o-dichlorobenzene well in excess of the MCL over many years could experience problems with their liver, kidneys, or circulatory systems.
59. *p*-Dichlorobenzene	0.075	0.075	Some people who drink water containing p-dichlorobenzene in excess of the MCL over many years could experience anemia, damage to their liver, kidneys, or spleen, or changes in their blood.
60. 1,2-Dichloroethane	Zero	0.005	Some people who drink water containing 1,2-dichloroethane in excess of the MCL over many years may have an increased risk of getting cancer.
61. 1,1-Dichloroethylene	0.007	0.007	Some people who drink water containing 1,1-dichloroethylene in excess of the MCL over many years could experience problems with their liver.
62. *cis*-1,2-Dichloroethylene	0.07	0.07	Some people who drink water containing cis-1,2-dichloroethylene in excess of the MCL over many years could experience problems with their liver.
63. *trans*-1,2-Dichloroethylene	0.1	0.1	Some people who drink water containing trans-1,2-dichloroethylene well in excess of the MCL over many years could experience problems with their liver.
64. Dichloromethane	Zero	0.005	Some people who drink water containing dichloromethane in excess of the MCL over many years could have liver problems and may have an increased risk of getting cancer.
65. 1,2-Dichloropropane	Zero	0.005	Some people who drink water containing 1,2-dichloropropane in excess of the MCL over many years may have an increased risk of getting cancer.
66. Ethylbenzene	0.7	0.7	Some people who drink water containing ethylbenzene well in excess of the MCL over many years could experience problems with their liver or kidneys.
67. Styrene	0.1	0.1	Some people who drink water containing styrene well in excess of the MCL over many years could have problems with their liver, kidneys, or circulatory system.
68. Tetrachloroethylene	Zero	0.005	Some people who drink water containing tetrachloroethylene in excess of the MCL over many years could have problems with their liver, and may have an increased risk of getting cancer.
69. Toluene	1	1	Some people who drink water containing toluene well in excess of the MCL over many years could have problems with their nervous system, kidneys, or liver.
70. 1,2,4-Trichlorobenzene	0.07	0.07	Some people who drink water containing 1,2,4-trichlorobenzene well in excess of the MCL over many years could experience changes in their adrenal glands.
71. 1,1,1-Trichloroethane	0.2	0.2	Some people who drink water containing 1,1,1-trichloroethane in excess of the MCL over many years could experience problems with their liver, nervous system, or circulatory system.
72. 1,1,2-Trichloroethane	0.003	0.005	Some people who drink water containing 1,1,2-trichloroethane well in excess of the MCL over many years could have problems with their liver, kidneys, or immune systems.
73. Trichloroethylene	Zero	0.005	Some people who drink water containing trichloroethylene in excess of the MCL over many years could experience problems with their liver and may have an increased risk of getting cancer.
74. Vinyl chloride	Zero	0.002	Some people who drink water containing vinyl chloride in excess of the MCL over many years may have an increased risk of getting cancer.

75. Xylenes (total)	10	10	Some people who drink water containing xylenes in excess of the MCL over many years could experience damage to their nervous system.
G. Radioactive Contaminants			
76. Beta/photon emitters	Zero	4 mrem/yr [15]	Certain minerals are radioactive and may emit forms of radiation known as photons and beta radiation. Some people who drink water containing beta and photon emitters in excess of the MCL over many years may have an increased risk of getting cancer.
77. Alpha emitters	Zero	17 pCi/L [17]	Certain minerals are radioactive and may emit a form of radiation known as alpha radiation. Some people who drink water containing alpha emitters in excess of the MCL over many years may have an increased risk of getting cancer.
78. Combined radium (226 & 228)	Zero	5 pCi/L	Some people who drink water containing radium 226 or 228 in excess of the MCL over many years may have an increased risk of getting cancer.
79. Uranium [16]	Zero	30 µg/L	Some people who drink water containing uranium in excess of the MCL over many years may have an increased risk of getting cancer and kidney toxicity.
H. Disinfection Byproducts (DBPs), Byproduct Precursors, and Disinfectant Residuals: Where disinfection is used in the treatment of drinking water, disinfectants combine with organic and inorganic matter present in water to form chemicals called disinfection byproducts (DBPs). EPA sets standards for controlling the levels of disinfectants and DBPs in drinking water, including trihalomethanes (THMs) and haloacetic acids (HAAs) [18]			
80. Total trihalomethanes (TTHMs)	N/A	0.080 [19 20]	Some people who drink water containing trihalomethanes in excess of the MCL over many years may experience problems with their liver, kidneys, or central nervous system, and may have an increased risk of getting cancer.
81. Haloacetic Acids (HAA)	N/A	0.060 [21]	Some people who drink water containing haloacetic acids in excess of the MCL over many years may have an increased risk of getting cancer.
82. Bromate	Zero	0.010	Some people who drink water containing bromate in excess of the MCL over many years may have an increased risk of getting cancer.
83. Chlorite	0.08	1.0	Some infants and young children who drink water containing chlorite in excess of the MCL could experience nervous system effects. Similar effects may occur in fetuses of pregnant women who drink water containing chlorite in excess of the MCL. Some people may experience anemia.
84. Chlorine	4 (MRDLG) [22]	4.0 (MRDL) [23]	Some people who use water containing chlorine well in excess of the MRDL could experience irritating effects to their eyes and nose. Some people who drink water containing chlorine well in excess of the MRDL could experience stomach discomfort.
85. Chloramines	4 (MRDLG)	4.0 (MRDL)	Some people who use water containing chloramines well in excess of the MRDL could experience irritating effects to their eyes and nose. Some people who drink water containing chloramines well in excess of the MRDL could experience stomach discomfort or anemia.
86a. Chlorine dioxide, where any 2 consecutive daily samples taken at the entrance to the distribution system are above the MRDL.	0.8 (MRDLG)	0.8 (MRDL)	Some infants and young children who drink water containing chlorine dioxide in excess of the MRDL could experience nervous system effects. Similar effects may occur in fetuses of pregnant women who drink water containing chlorine dioxide in excess of the MRDL. Some people may experience anemia. *Add for public notification only:* The chlorine dioxide violations reported today are the result of exceedances at the treatment facility only, not within the distribution system which delivers water to consumers. Continued compliance with chlorine dioxide levels within the distribution system minimizes the potential risk of these violations to consumers.
86b. Chlorine dioxide, where one or more distribution system samples are above the MRDL.	0.8 (MRDLG)	0.8 (MRDL)	Some infants and young children who drink water containing chlorine dioxide in excess of the MRDL could experience nervous system effects. Similar effects may occur in fetuses of pregnant women who drink water containing chlorine dioxide in excess of the MRDL. Some people may experience anemia.

Contaminant	MCLG [1] mg/L	MCL [2] mg/L	Standard health effects language for public notification
			Add for public notification only: The chlorine dioxide violations reported today include exceedances of the EPA standard within the distribution system which delivers water to consumers. Violations of the chlorine dioxide standard within the distribution system may harm human health based on short-term exposures. Certain groups, including fetuses, infants, and young children, may be especially susceptible to nervous system effects from excessive chlorine dioxide exposure.
87. Control of DBP precursors (TOC)	None	TT	Total organic carbon (TOC) has no health effects. However, total organic carbon provides a medium for the formation of disinfection byproducts. These byproducts include trihalomethanes (THMs) and haloacetic acids (HAAs). Drinking water containing these byproducts in excess of the MCL may lead to adverse health effects, liver or kidney problems, or nervous system effects, and may lead to an increased risk of getting cancer.
I. Other Treatment Techniques			
88. Acrylamide	Zero	TT	Some people who drink water containing high levels of acrylamide over a long period of time could have problems with their nervous system or blood, and may have an increased risk of getting cancer.
89. Epichlorohydrin	Zero	TT	Some people who drink water containing high levels of epichlorohydrin over a long period of time could experience stomach problems, and may have an increased risk of getting cancer.

APPENDIX B—ENDNOTES

† Until March 31, 2016.

‡ Beginning April 1, 2016.

1. MCLG—Maximum contaminant level goal

2. MCL—Maximum contaminant level

3. For water systems analyzing at least 40 samples per month, no more than 5.0 percent of the monthly samples may be positive for total coliforms. For systems analyzing fewer than 40 samples per month, no more than one sample per month may be positive for total coliforms.

4. There are various regulations that set turbidity standards for different types of systems, including 40 CFR 141.13, and the 1989 Surface Water Treatment Rule, the 1998 Interim Enhanced Surface Water Treatment Rule and the 2002 Long Term 1 Enhanced Surface Water Treatment Rule. The MCL for the monthly turbidity average is 1 NTU; the MCL for the 2-day average is 5 NTU for systems that are required to filter but have not yet installed filtration (40 CFR 141.13).

5. NTU—Nephelometric turbidity unit

6. There are various regulations that set turbidity standards for different types of systems, including 40 CFR 141.13, and the 1989 Surface Water Treatment Rule, the 1998 Interim Enhanced Surface Water Treatment Rule and the 2001 Long Term 1 Enhanced Surface Water Treatment Rule. Systems subject to the Surface Water Treatment Rule (both filtered and unfiltered) may not exceed 5 NTU. In addition, in filtered systems, 95 percent of samples each month must not exceed 0.5 NTU in systems using conventional or direct filtration and must not exceed 1 NTU in systems using slow sand or diatomaceous earth filtration or other filtration technologies approved by the primacy agency.

7. TT—Treatment technique

8. There are various regulations that set turbidity standards for different types of systems, including 40 CFR 141.13, the 1989 Surface Water Treatment Rule (SWTR), the 1998 Interim Enhanced Surface Water Treatment Rule (IESWTR) and the 2002 Long Term 1 Enhanced Surface Water Treatment Rule (LT1ESWTR). For systems subject to the IESWTR (systems serving at least 10,000 people, using surface water or ground water under the direct influence of surface water), that use conventional filtration or direct filtration, after January 1, 2002, the turbidity level of a system's combined filter effluent may not exceed 0.3 NTU in at least 95 percent of monthly measurements, and the turbidity level of a system's combined filter effluent must not exceed 1 NTU at any time. Systems subject to the IESWTR using technologies other than conventional, direct, slow sand, or diatomaceous earth filtration must meet turbidity limits set by the primacy agency. For systems subject to the LT1ESWTR (systems serving fewer than 10,000 people, using surface water or ground water under the direct influence of surface water) that use conventional filtration or direct filtration, after January 1, 2005, the turbidity level of a system's combined filter effluent may not exceed 0.3 NTU in at least 95 percent of monthly measurements, and the turbidity level of a system's combined filter effluent must not exceed 1 NTU at any time. Systems subject to the LT1ESWTR using technologies other than conventional, direct, slow sand, or diatomaceous earth filtration must meet turbidity limits set by the primacy agency.

9. The bacteria detected by heterotrophic plate count (HPC) are not necessarily harmful. HPC is simply an alternative method of determining disinfectant residual levels. The number of such bacteria is an indicator of whether there is enough disinfectant in the distribution system.

10. SWTR, IESWTR, and LT1ESWTR treatment technique violations that involve turbidity exceedances may use the health effects language for turbidity instead.

11. These arsenic values are effective January 23, 2006. Until then, the MCL is 0.05 mg/L and there is no MCLG.

12. Millions fibers per liter.

13. Action Level = 0.015 mg/L

14. Action Level = 1.3 mg/L

15. Millirems per years

16. The uranium MCL is effective December 8, 2003 for all community water systems.

17. Picocuries per liter

18. Surface water systems and ground water systems under the direct influence of surface water are regulated under subpart H of 40 CFR 141. Subpart H community and non-transient non-community systems serving ≥10,000 must comply with subpart L DBP MCLs and disinfectant maximum residual disinfectant levels (MRDLs) beginning January 1, 2002. All other community and non-transient non-community systems must comply with subpart L DBP MCLs and disinfectant MRDLs beginning January 1, 2004. Subpart H transient non-community systems serving ≥10,000 that use chlorine dioxide as a disinfectant or oxidant must comply with the chlorine dioxide MRDL beginning January 1, 2002. All other transient non-community systems that use chlorine dioxide as a disinfectant or oxidant must comply with the chlorine dioxide MRDL beginning January 1, 2004.

19. Community and non-transient non-community systems must comply with subpart V TTHM and HAA5 MCLs of 0.080 mg/L and 0.060 mg/L, respectively (with compliance calculated as a locational running annual average) on the schedule in §141.620.

20. The MCL for total trihalomethanes is the sum of the concentrations of the individual trihalomethanes.

21. The MCL for haloacetic acids is the sum of the concentrations of the individual haloacetic acids.

22. MRDLG—Maximum residual disinfectant level goal.

23. MRDL—Maximum residual disinfectant level.

[65 FR 26043, May 4, 2000; 65 FR 38629, June 21, 2000; 65 FR 40521, 40522, June 30, 2000, as amended at 65 FR 76751, Dec. 7, 2000; 66 FR 7065, Jan. 22, 2001; 66 FR 31104, June 8, 2001; 67 FR 1838, Jan. 14, 2002; 67 FR 70857, Nov. 27, 2002; 68 FR 14507, Mar. 25, 2003; 69 FR 38856, June 29, 2004; 71 FR 483, Jan. 4, 2006; 71 FR 65653, Nov. 8, 2006; 78 FR 10351, Feb. 13, 2013]

APPENDIX C TO SUBPART Q OF PART 141—LIST OF ACRONYMS USED IN PUBLIC NOTIFICATION REGULATION

CCR Consumer Confidence Report
CWS Community Water System
DBP Disinfection Byproduct
EPA Environmental Protection Agency
GWR Ground Water Rule
HPC Heterotrophic Plate Count
IESWTR Interim Enhanced Surface Water Treatment Rule
IOC Inorganic Chemical
LCR Lead and Copper Rule
MCL Maximum Contaminant Level
MCLG Maximum Contaminant Level Goal
MRDL Maximum Residual Disinfectant Level
MRDLG Maximum Residual Disinfectant Level Goal
NCWS Non-Community Water System
NPDWR National Primary Drinking Water Regulation
NTNCWS Non-Transient Non-Community Water System
NTU Nephelometric Turbidity Unit
OGWDW Office of Ground Water and Drinking Water
OW Office of Water
PN Public Notification
PWS Public Water System
SDWA Safe Drinking Water Act
SMCL Secondary Maximum Contaminant Level
SOC Synthetic Organic Chemical
SWTR Surface Water Treatment Rule
TCR Total Coliform Rule
TT Treatment Technique
TWS Transient Non-Community Water System
VOC Volatile Organic Chemical

[65 FR 26035, May 4, 2000, as amended at 71 FR 65653, Nov. 8, 2006]

Subpart R [Reserved]

Subpart S—Ground Water Rule

SOURCE: 71 FR 65653, Nov. 8, 2006, unless otherwise noted.

§ 141.400 General requirements and applicability.

(a) *Scope of this subpart.* The requirements of this subpart S constitute National Primary Drinking Water Regulations.

(b) *Applicability.* This subpart applies to all public water systems that use ground water except that it does not apply to public water systems that combine all of their ground water with surface water or with ground water under the direct influence of surface water prior to treatment under subpart H. For the purposes of this subpart, ''ground water system'' is defined as any public water system meeting this applicability statement, including consecutive systems receiving finished ground water.

(c) *General requirements.* Systems subject to this subpart must comply with the following requirements:

(1) Sanitary survey information requirements for all ground water systems as described in § 141.401.

(2) Microbial source water monitoring requirements for ground water systems that do not treat all of their ground water to at least 99.99 percent (4-log) treatment of viruses (using inactivation, removal, or a State-approved combination of 4-log virus inactivation and removal) before or at the first customer as described in § 141.402.

(3) Treatment technique requirements, described in § 141.403, that apply to ground water systems that have fecally contaminated source waters, as determined by source water monitoring conducted under § 141.402, or that have significant deficiencies that are identified by the State or that are identified by EPA under SDWA section 1445. A ground water system with fecally contaminated source water or with significant deficiencies subject to the treatment technique requirements of this subpart must implement one or more of the following corrective action options: correct all significant deficiencies; provide an alternate source of water; eliminate the source of contamination; or provide treatment that

reliably achieves at least 4-log treatment of viruses (using inactivation, removal, or a State-approved combination of 4-log virus inactivation and removal) before or at the first customer.

(4) Ground water systems that provide at least 4-log treatment of viruses (using inactivation, removal, or a State-approved combination of 4-log virus inactivation and removal) before or at the first customer are required to conduct compliance monitoring to demonstrate treatment effectiveness, as described in § 141.403(b).

(5) If requested by the State, ground water systems must provide the State with any existing information that will enable the State to perform a hydrogeologic sensitivity assessment. For the purposes of this subpart, ''hydrogeologic sensitivity assessment'' is a determination of whether ground water systems obtain water from hydrogeologically sensitive settings.

(d) *Compliance date*. Ground water systems must comply, unless otherwise noted, with the requirements of this subpart beginning December 1, 2009.

§ 141.401 Sanitary surveys for ground water systems.

(a) Ground water systems must provide the State, at the State's request, any existing information that will enable the State to conduct a sanitary survey.

(b) For the purposes of this subpart, a ''sanitary survey,'' as conducted by the State, includes but is not limited to, an onsite review of the water source(s) (identifying sources of contamination by using results of source water assessments or other relevant information where available), facilities, equipment, operation, maintenance, and monitoring compliance of a public water system to evaluate the adequacy of the system, its sources and operations and the distribution of safe drinking water.

(c) The sanitary survey must include an evaluation of the applicable components listed in paragraphs (c)(1) through (8) of this section:

(1) Source,

(2) Treatment,

(3) Distribution system,

(4) Finished water storage,

(5) Pumps, pump facilities, and controls,

(6) Monitoring, reporting, and data verification,

(7) System management and operation, and

(8) Operator compliance with State requirements.

§ 141.402 Ground water source microbial monitoring and analytical methods.

(a) *Triggered source water monitoring*—

(1) *General requirements*. A ground water system must conduct triggered source water monitoring if the conditions identified in paragraphs (a)(1)(i) and either (a)(1)(ii) or (a)(1)(iii) of this section exist.

(i) The system does not provide at least 4-log treatment of viruses (using inactivation, removal, or a State-approved combination of 4-log virus inactivation and removal) before or at the first customer for each ground water source; and either

(ii) The system is notified that a sample collected under § 141.21(a) is total coliform-positive and the sample is not invalidated under § 141.21(c) until March 31, 2016, or

(iii) The system is notified that a sample collected under §§ 141.854 through 141.857 is total coliform-positive and the sample is not invalidated under § 141.853(c) beginning April 1, 2016.

(2) *Sampling requirements*. A ground water system must collect, within 24 hours of notification of the total coliform-positive sample, at least one ground water source sample from each ground water source in use at the time the total coliform-positive sample was collected under § 141.21(a) until March 31, 2016, or collected under §§ 141.854 through 141.857 beginning April 1, 2016, except as provided in paragraph (a)(2)(ii) of this section.

(i) The State may extend the 24-hour time limit on a case-by-case basis if the system cannot collect the ground water source water sample within 24 hours due to circumstances beyond its control. In the case of an extension, the State must specify how much time the system has to collect the sample.

(ii) If approved by the State, systems with more than one ground water

source may meet the requirements of this paragraph (a)(2) by sampling a representative ground water source or sources. If directed by the State, systems must submit for State approval a triggered source water monitoring plan that identifies one or more ground water sources that are representative of each monitoring site in the system's sample siting plan under §141.21(a) until March 31, 2016, or under §141.853 beginning April 1, 2016, and that the system intends to use for representative sampling under this paragraph.

(iii) Until March 31, 2016, a ground water system serving 1,000 or fewer people may use a repeat sample collected from a ground water source to meet both the requirements of §141.21(b) and to satisfy the monitoring requirements of paragraph (a)(2) of this section for that ground water source only if the State approves the use of *E. coli* as a fecal indicator for source water monitoring under this paragraph (a). If the repeat sample collected from the ground water source is *E. coli*-positive, the system must comply with paragraph (a)(3) of this section.

(iv) Beginning April 1, 2016, a ground water system serving 1,000 or fewer people may use a repeat sample collected from a ground water source to meet both the requirements of subpart Y and to satisfy the monitoring requirements of paragraph (a)(2) of this section for that ground water source only if the State approves the use of *E. coli* as a fecal indicator for source water monitoring under this paragraph (a) and approves the use of a single sample for meeting both the triggered source water monitoring requirements in this paragraph (a) and the repeat monitoring requirements in §141.858. If the repeat sample collected from the ground water source is *E. coli*- positive, the system must comply with paragraph (a)(3) of this section.

(3) *Additional requirements.* If the State does not require corrective action under §141.403(a)(2) for a fecal indicator-positive source water sample collected under paragraph (a)(2) of this section that is not invalidated under paragraph (d) of this section, the system must collect five additional source water samples from the same source within 24 hours of being notified of the fecal indicator-positive sample.

(4) *Consecutive and wholesale systems.* (i) In addition to the other requirements of this paragraph (a), a consecutive ground water system that has a total coliform-positive sample collected under §141.21(a) until March 31, 2016, or under §§141.854 through 141.857 beginning April 1, 2016, must notify the wholesale system(s) within 24 hours of being notified of the total coliform-positive sample.

(ii) In addition to the other requirements of this paragraph (a), a wholesale ground water system must comply with paragraphs (a)(4)(ii)(A) and (a)(4)(ii)(B) of this section.

(A) A wholesale ground water system that receives notice from a consecutive system it serves that a sample collected under §141.21(a) until March 31, 2016, or collected under §§141.854 through 141.857 beginning April 1, 2016, is total coliform-positive must, within 24 hours of being notified, collect a sample from its ground water source(s) under paragraph (a)(2) of this section and analyze it for a fecal indicator under paragraph (c) of this section.

(B) If the sample collected under paragraph (a)(4)(ii)(A) of this section is fecal indicator-positive, the wholesale ground water system must notify all consecutive systems served by that ground water source of the fecal indicator source water positive within 24 hours of being notified of the ground water source sample monitoring result and must meet the requirements of paragraph (a)(3) of this section.

(5) *Exceptions to the triggered source water monitoring requirements.* A ground water system is not required to comply with the source water monitoring requirements of paragraph (a) of this section if either of the following conditions exists:

(i) The State determines, and documents in writing, that the total coliform-positive sample collected under §141.21(a) until March 31, 2016, or under §§141.854 through 141.857 beginning April 1, 2016, is caused by a distribution system deficiency; or

(ii) The total coliform-positive sample collected under §141.21(a) until March 31, 2016, or under §§141.854 through 141.857 beginning April 1, 2016,

is collected at a location that meets State criteria for distribution system conditions that will cause total coliform-positive samples.

(b) *Assessment source water monitoring.* If directed by the State, ground water systems must conduct assessment source water monitoring that meets State-determined requirements for such monitoring. A ground water system conducting assessment source water monitoring may use a triggered source water sample collected under paragraph (a)(2) of this section to meet the requirements of paragraph (b) of this section. State-determined assessment source water monitoring requirements may include:

(1) Collection of a total of 12 ground water source samples that represent each month the system provides ground water to the public,

(2) Collection of samples from each well unless the system obtains written State approval to conduct monitoring at one or more wells within the ground water system that are representative of multiple wells used by that system and that draw water from the same hydrogeologic setting,

(3) Collection of a standard sample volume of at least 100 mL for fecal indicator analysis regardless of the fecal indicator or analytical method used,

(4) Analysis of all ground water source samples using one of the analytical methods listed in the in paragraph (c)(2) of this section for the presence of *E. coli*, enterococci, or coliphage,

(5) Collection of ground water source samples at a location prior to any treatment of the ground water source unless the State approves a sampling location after treatment, and

(6) Collection of ground water source samples at the well itself unless the system's configuration does not allow for sampling at the well itself and the State approves an alternate sampling location that is representative of the water quality of that well.

(c) *Analytical methods.* (1) A ground water system subject to the source water monitoring requirements of paragraph (a) of this section must collect a standard sample volume of at least 100 mL for fecal indicator analysis regardless of the fecal indicator or analytical method used.

(2) A ground water system must analyze all ground water source samples collected under paragraph (a) of this section using one of the analytical methods listed in the following table in paragraph (c)(2) of this section or one of the alternative methods listed in appendix A to subpart C of this part for the presence of *E. coli*, enterococci, or coliphage:

ANALYTICAL METHODS FOR SOURCE WATER MONITORING

Fecal indicator [1]	Methodology	Method citation
E. coli	Colilert [3]	9223 B.[2]
	Colisure [3]	9223 B.[2]
	Membrane Filter Method with MI Agar m-ColiBlue24 Test [5].	EPA Method 1604.[4]
	E*Colite Test [6].	
	EC–MUG [7]	9221 F.[2]
	NA–MUG [7]	9222 G.[2]
Enterococci	Multiple-Tube Technique	9230B.[2]
	Membrane Filter Technique	9230C.[2]
	Membrane Filter Technique Enterolert [9].	EPA Method 1600.[8]
Coliphage	Two-Step Enrichment Presence-Absence Procedure.	EPA Method 1601.[10]
	Single Agar Layer Procedure	EPA Method 1602.[11]

Analyses must be conducted in accordance with the documents listed below. The Director of the Federal Register approves the incorporation by reference of the documents listed in footnotes 2–11 in accordance with 5 U.S.C. 552(a) and 1 CFR part 51. Copies of the documents may be obtained from the sources listed below. Copies may be inspected at EPA's Drinking Water Docket, EPA West, 1301 Constitution Avenue, NW., EPA West, Room B102, Washington DC 20460 (Telephone: 202–566–2426); or at the National Archives and Records Administration (NARA). For information on the availability of this material at NARA, call 202–741–6030, or go to: *http://www.archives.gov/federal_register/code_of_federal_regulations/ibr_locations.html.*

[1] The time from sample collection to initiation of analysis may not exceed 30 hours. The ground water system is encouraged but is not required to hold samples below 10 °C during transit.

[2] Methods are described in Standard Methods for the Examination of Water and Wastewater 20th edition (1998) and copies may be obtained from the American Public Health Association, 1015 Fifteenth Street, NW., Washington, DC 20005–2605.

[3] Medium is available through IDEXX Laboratories, Inc., One IDEXX Drive, Westbrook, Maine 04092.

[4] EPA Method 1604: Total Coliforms and *Escherichia coli* in Water by Membrane Filtration Using a Simultaneous Detection Technique (MI Medium); September 2002, EPA 821–R–02–024. Method is available at *http://www.epa.gov/nerlcwww/1604sp02.pdf* or from EPA's Water Resource Center (RC–4100T), 1200 Pennsylvania Avenue, NW., Washington, DC 20460.

[5] A description of the m-ColiBlue24 Test, ''Total Coliforms and *E. coli* Membrane Filtration Method with m-ColiBlue24® Broth,'' Method No. 10029 Revision 2, August 17, 1999, is available from Hach Company, 100 Dayton Ave., Ames, IA 50010 or from EPA's Water Resource Center (RC–4100T), 1200 Pennsylvania Avenue, NW., Washington, DC 20460.

[6] A description of the E*Colite Test, ''Charm E*Colite Presence/Absence Test for Detection and Identification of Coliform Bacteria and *Escherichia coli* in Drinking Water, January 9, 1998, is available from Charm Sciences, Inc., 659 Andover St., Lawrence, MA 01843–1032 or from EPA's Water Resource Center (RC–4100T), 1200 Pennsylvania Avenue, NW., Washington, DC 20460.

[7] EC–MUG (Method 9221F) or NA–MUG (Method 9222G) can be used for *E. coli* testing step as described in § 141.21(f)(6)(i) or (ii) after use of Standard Methods 9221 B, 9221 D, 9222 B, or 9222 C.

[8] EPA Method 1600: Enterococci in Water by Membrane Filtration Using membrane-Enterococcus Indoxyl–β–D–Glucoside Agar (mEI) EPA 821–R–02–022 (September 2002) is an approved variation of Standard Method 9230C. The method is available at *http://www.epa.gov/nerlcwww/1600sp02.pdf* or from EPA's Water Resource Center (RC–4100T), 1200 Pennsylvania Avenue, NW., Washington, DC 20460. The holding time and temperature for ground water samples are specified in footnote 1 above, rather than as specified in Section 8 of EPA Method 1600.

[9] Medium is available through IDEXX Laboratories, Inc., One IDEXX Drive, Westbrook, Maine 04092. Preparation and use of the medium is set forth in the article ''Evaluation of Enterolert for Enumeration of Enterococci in Recreational Waters,'' by Budnick, G.E., Howard, R.T., and Mayo, D.R., 1996, Applied and Environmental Microbiology, 62:3881–3884.

[10] EPA Method 1601: Male-specific (F +) and Somatic Coliphage in Water by Two-step Enrichment Procedure; April 2001, EPA 821–R–01–030. Method is available at *http://www.epa.gov/nerlcwww/1601ap01.pdf* or from EPA's Water Resource Center (RC–4100T), 1200 Pennsylvania Avenue, NW., Washington, DC 20460.

[11] EPA Method 1602: Male-specific (F +) and Somatic Coliphage in Water by Single Agar Layer (SAL) Procedure; April 2001, EPA 821–R–01–029. Method is available at *http://www.epa.gov/nerlcwww/1602ap01.pdf* or from EPA's Water Resource Center (RC–4100T), 1200 Pennsylvania Avenue, NW., Washington, DC 20460.

(d) *Invalidation of a fecal indicator-positive ground water source sample.* (1) A ground water system may obtain State invalidation of a fecal indicator-positive ground water source sample collected under paragraph (a) of this section only under the conditions specified in paragraphs (d)(1)(i) and (ii) of this section.

(i) The system provides the State with written notice from the laboratory that improper sample analysis occurred; or

(ii) The State determines and documents in writing that there is substantial evidence that a fecal indicator-positive ground water source sample is not related to source water quality.

(2) If the State invalidates a fecal indicator-positive ground water source sample, the ground water system must collect another source water sample under paragraph (a) of this section within 24 hours of being notified by the State of its invalidation decision and have it analyzed for the same fecal indicator using the analytical methods in paragraph (c) of this section. The State may extend the 24-hour time limit on a case-by-case basis if the system cannot collect the source water sample within 24 hours due to circumstances beyond its control. In the case of an extension, the State must specify how much time the system has to collect the sample.

(e) *Sampling location.* (1) Any ground water source sample required under paragraph (a) of this section must be collected at a location prior to any treatment of the ground water source unless the State approves a sampling location after treatment.

(2) If the system's configuration does not allow for sampling at the well itself, the system may collect a sample at a State-approved location to meet the requirements of paragraph (a) of this section if the sample is representative of the water quality of that well.

(f) *New sources.* If directed by the State, a ground water system that places a new ground water source into service after November 30, 2009, must conduct assessment source water monitoring under paragraph (b) of this section. If directed by the State, the system must begin monitoring before the ground water source is used to provide water to the public.

(g) *Public notification.* A ground water system with a ground water source sample collected under paragraph (a) or (b) of this section that is fecal indicator-positive and that is not invalidated under paragraph (d) of this section, including consecutive systems served by the ground water source, must conduct public notification under § 141.202.

(h) *Monitoring violations.* Failure to meet the requirements of paragraphs (a)–(f) of this section is a monitoring violation and requires the ground water system to provide public notification under § 141.204.

[71 FR 65653, Nov. 8, 2006; 71 FR 67427, Nov. 21, 2006, as amended at 74 FR 30958, June 29, 2009; 78 FR 10353, Feb. 13, 2013]

§ 141.403 Treatment technique requirements for ground water systems.

(a) *Ground water systems with significant deficiencies or source water fecal contamination.* (1) The treatment technique requirements of this section must be met by ground water systems when a significant deficiency is identified or when a ground water source sample collected under § 141.402(a)(3) is fecal indicator-positive.

(2) If directed by the State, a ground water system with a ground water source sample collected under § 141.402(a)(2), § 141.402(a)(4), or § 141.402(b) that is fecal indicator-positive must comply with the treatment technique requirements of this section.

(3) When a significant deficiency is identified at a Subpart H public water system that uses both ground water and surface water or ground water under the direct influence of surface water, the system must comply with provisions of this paragraph except in cases where the State determines that the significant deficiency is in a portion of the distribution system that is served solely by surface water or ground water under the direct influence of surface water.

(4) Unless the State directs the ground water system to implement a specific corrective action, the ground water system must consult with the State regarding the appropriate corrective action within 30 days of receiving written notice from the State of a significant deficiency, written notice from a laboratory that a ground water source sample collected under § 141.402(a)(3) was found to be fecal indicator-positive, or direction from the State that a fecal indicator'positive collected under § 141.402(a)(2), § 141.402(a)(4), or § 141.402(b) requires corrective action. For the purposes of this subpart, significant deficiencies include, but are not limited to, defects in design, operation, or maintenance, or a failure or malfunction of the sources, treatment, storage, or distribution system that the State determines to be causing, or have potential for causing, the introduction of contamination into the water delivered to consumers.

(5) Within 120 days (or earlier if directed by the State) of receiving written notification from the State of a significant deficiency, written notice from a laboratory that a ground water source sample collected under § 141.402(a)(3) was found to be fecal indicator-positive, or direction from the State that a fecal indicator-positive sample collected under § 141.402(a)(2), § 141.402(a)(4), or § 141.402(b) requires corrective action, the ground water system must either:

(i) Have completed corrective action in accordance with applicable State plan review processes or other State guidance or direction, if any, including State-specified interim measures; or

(ii) Be in compliance with a State-approved corrective action plan and schedule subject to the conditions specified in paragraphs (a)(5)(ii)(A) and (a)(5)(ii)(B) of this section.

(A) Any subsequent modifications to a State-approved corrective action plan and schedule must also be approved by the State.

(B) If the State specifies interim measures for protection of the public health pending State approval of the corrective action plan and schedule or pending completion of the corrective action plan, the system must comply with these interim measures as well as with any schedule specified by the State.

(6) *Corrective action alternatives.* Ground water systems that meet the conditions of paragraph (a)(1) or (a)(2) of this section must implement one or more of the following corrective action alternatives:

(i) Correct all significant deficiencies;

(ii) Provide an alternate source of water;

(iii) Eliminate the source of contamination; or

(iv) Provide treatment that reliably achieves at least 4-log treatment of viruses (using inactivation, removal, or a State-approved combination of 4-log virus inactivation and removal) before or at the first customer for the ground water source.

(7) *Special notice to the public of significant deficiencies or source water fecal contamination.* (i) In addition to the applicable public notification requirements of § 141.202, a community ground water system that receives notice from

the State of a significant deficiency or notification of a fecal indicator-positive ground water source sample that is not invalidated by the State under §141.402(d) must inform the public served by the water system under §141.153(h)(6) of the fecal indicator-positive source sample or of any significant deficiency that has not been corrected. The system must continue to inform the public annually until the significant deficiency is corrected or the fecal contamination in the ground water source is determined by the State to be corrected under paragraph (a)(5) of this section.

(ii) In addition to the applicable public notification requirements of §141.202, a non-community ground water system that receives notice from the State of a significant deficiency must inform the public served by the water system in a manner approved by the State of any significant deficiency that has not been corrected within 12 months of being notified by the State, or earlier if directed by the State. The system must continue to inform the public annually until the significant deficiency is corrected. The information must include:

(A) The nature of the significant deficiency and the date the significant deficiency was identified by the State;

(B) The State-approved plan and schedule for correction of the significant deficiency, including interim measures, progress to date, and any interim measures completed; and

(C) For systems with a large proportion of non-English speaking consumers, as determined by the State, information in the appropriate language(s) regarding the importance of the notice or a telephone number or address where consumers may contact the system to obtain a translated copy of the notice or assistance in the appropriate language.

(iii) If directed by the State, a non-community water system with significant deficiencies that have been corrected must inform its customers of the significant deficiencies, how the deficiencies were corrected, and the dates of correction under paragraph (a)(7)(ii) of this section.

(b) *Compliance monitoring*—(1) *Existing ground water sources.* A ground water system that is not required to meet the source water monitoring requirements of this subpart for any ground water source because it provides at least 4-log treatment of viruses (using inactivation, removal, or a State-approved combination of 4-log virus inactivation and removal) before or at the first customer for any ground water source before December 1, 2009, must notify the State in writing that it provides at least 4-log treatment of viruses (using inactivation, removal, or a State-approved combination of 4-log virus inactivation and removal) before or at the first customer for the specified ground water source and begin compliance monitoring in accordance with paragraph (b)(3) of this section by December 1, 2009. Notification to the State must include engineering, operational, or other information that the State requests to evaluate the submission. If the system subsequently discontinues 4-log treatment of viruses (using inactivation, removal, or a State-approved combination of 4-log virus inactivation and removal) before or at the first customer for a ground water source, the system must conduct ground water source monitoring as required under §141.402.

(2) *New ground water sources.* A ground water system that places a ground water source in service after November 30, 2009, that is not required to meet the source water monitoring requirements of this subpart because the system provides at least 4-log treatment of viruses (using inactivation, removal, or a State-approved combination of 4-log virus inactivation and removal) before or at the first customer for the ground water source must comply with the requirements of paragraphs (b)(2)(i), (b)(2)(ii) and (b)(2)(iii) of this section.

(i) The system must notify the State in writing that it provides at least 4-log treatment of viruses (using inactivation, removal, or a State-approved combination of 4-log virus inactivation and removal) before or at the first customer for the ground water source. Notification to the State must include engineering, operational, or other information that the State requests to evaluate the submission.

(ii) The system must conduct compliance monitoring as required under §141.403(b)(3) of this subpart within 30 days of placing the source in service.

(iii) The system must conduct ground water source monitoring under §141.402 if the system subsequently discontinues 4-log treatment of viruses (using inactivation, removal, or a State-approved combination of 4-log virus inactivation and removal) before or at the first customer for the ground water source.

(3) *Monitoring requirements.* A ground water system subject to the requirements of paragraphs (a), (b)(1) or (b)(2) of this section must monitor the effectiveness and reliability of treatment for that ground water source before or at the first customer as follows:

(i) *Chemical disinfection*—(A) *Ground water systems serving greater than 3,300 people.* A ground water system that serves greater than 3,300 people must continuously monitor the residual disinfectant concentration using analytical methods specified in §141.74(a)(2) at a location approved by the State and must record the lowest residual disinfectant concentration each day that water from the ground water source is served to the public. The ground water system must maintain the State-determined residual disinfectant concentration every day the ground water system serves water from the ground water source to the public. If there is a failure in the continuous monitoring equipment, the ground water system must conduct grab sampling every four hours until the continuous monitoring equipment is returned to service. The system must resume continuous residual disinfectant monitoring within 14 days.

(B) *Ground water systems serving 3,300 or fewer people.* A ground water system that serves 3,300 or fewer people must monitor the residual disinfectant concentration using analytical methods specified in §141.74(a)(2) at a location approved by the State and record the residual disinfection concentration each day that water from the ground water source is served to the public. The ground water system must maintain the State-determined residual disinfectant concentration every day the ground water system serves water from the ground water source to the public. The ground water system must take a daily grab sample during the hour of peak flow or at another time specified by the State. If any daily grab sample measurement falls below the State-determined residual disinfectant concentration, the ground water system must take follow-up samples every four hours until the residual disinfectant concentration is restored to the State-determined level. Alternatively, a ground water system that serves 3,300 or fewer people may monitor continuously and meet the requirements of paragraph (b)(3)(i)(A) of this section.

(ii) *Membrane filtration.* A ground water system that uses membrane filtration to meet the requirements of this subpart must monitor the membrane filtration process in accordance with all State-specified monitoring requirements and must operate the membrane filtration in accordance with all State-specified compliance requirements. A ground water system that uses membrane filtration is in compliance with the requirement to achieve at least 4-log removal of viruses when:

(A) The membrane has an absolute molecular weight cut-off (MWCO), or an alternate parameter that describes the exclusion characteristics of the membrane, that can reliably achieve at least 4-log removal of viruses;

(B) The membrane process is operated in accordance with State-specified compliance requirements; and

(C) The integrity of the membrane is intact.

(iii) *Alternative treatment.* A ground water system that uses a State-approved alternative treatment to meet the requirements of this subpart by providing at least 4-log treatment of viruses (using inactivation, removal, or a State-approved combination of 4-log virus inactivation and removal) before or at the first customer must:

(A) Monitor the alternative treatment in accordance with all State-specified monitoring requirements; and

(B) Operate the alternative treatment in accordance with all compliance requirements that the State determines to be necessary to achieve at least 4-log treatment of viruses.

(c) *Discontinuing treatment.* A ground water system may discontinue 4-log

treatment of viruses (using inactivation, removal, or a State-approved combination of 4-log virus inactivation and removal) before or at the first customer for a ground water source if the State determines and documents in writing that 4-log treatment of viruses is no longer necessary for that ground water source. A system that discontinues 4-log treatment of viruses is subject to the source water monitoring and analytical methods requirements of § 141.402 of this subpart.

(d) Failure to meet the monitoring requirements of paragraph (b) of this section is a monitoring violation and requires the ground water system to provide public notification under § 141.204.

§ 141.404 Treatment technique violations for ground water systems.

(a) A ground water system with a significant deficiency is in violation of the treatment technique requirement if, within 120 days (or earlier if directed by the State) of receiving written notice from the State of the significant deficiency, the system:

(1) Does not complete corrective action in accordance with any applicable State plan review processes or other State guidance and direction, including State specified interim actions and measures, or

(2) Is not in compliance with a State-approved corrective action plan and schedule.

(b) Unless the State invalidates a fecal indicator-positive ground water source sample under § 141.402(d), a ground water system is in violation of the treatment technique requirement if, within 120 days (or earlier if directed by the State) of meeting the conditions of § 141.403(a)(1) or § 141.403(a)(2), the system:

(1) Does not complete corrective action in accordance with any applicable State plan review processes or other State guidance and direction, including State-specified interim measures, or

(2) Is not in compliance with a State-approved corrective action plan and schedule.

(c) A ground water system subject to the requirements of § 141.403(b)(3) that fails to maintain at least 4-log treatment of viruses (using inactivation, removal, or a State-approved combination of 4-log virus inactivation and removal) before or at the first customer for a ground water source is in violation of the treatment technique requirement if the failure is not corrected within four hours of determining the system is not maintaining at least 4-log treatment of viruses before or at the first customer.

(d) Ground water system must give public notification under § 141.203 for the treatment technique violations specified in paragraphs (a), (b) and (c) of this section.

§ 141.405 Reporting and recordkeeping for ground water systems.

(a) *Reporting*. In addition to the requirements of § 141.31, a ground water system regulated under this subpart must provide the following information to the State:

(1) A ground water system conducting compliance monitoring under § 141.403(b) must notify the State any time the system fails to meet any State-specified requirements including, but not limited to, minimum residual disinfectant concentration, membrane operating criteria or membrane integrity, and alternative treatment operating criteria, if operation in accordance with the criteria or requirements is not restored within four hours. The ground water system must notify the State as soon as possible, but in no case later than the end of the next business day.

(2) After completing any corrective action under § 141.403(a), a ground water system must notify the State within 30 days of completion of the corrective action.

(3) If a ground water system subject to the requirements of § 141.402(a) does not conduct source water monitoring under § 141.402(a)(5)(ii), the system must provide documentation to the State within 30 days of the total coliform positive sample that it met the State criteria.

(b) *Recordkeeping*. In addition to the requirements of § 141.33, a ground water system regulated under this subpart must maintain the following information in its records:

(1) Documentation of corrective actions. Documentation shall be kept for a period of not less than ten years.

(2) Documentation of notice to the public as required under §141.403(a)(7). Documentation shall be kept for a period of not less than three years.

(3) Records of decisions under §141.402(a)(5)(ii) and records of invalidation of fecal indicator-positive ground water source samples under §141.402(d). Documentation shall be kept for a period of not less than five years.

(4) For consecutive systems, documentation of notification to the wholesale system(s) of total coliform-positive samples that are not invalidated under §141.21(c) until March 31, 2016, or under §141.853 beginning April 1, 2016. Documentation shall be kept for a period of not less than five years.

(5) For systems, including wholesale systems, that are required to perform compliance monitoring under §141.403(b):

(i) Records of the State-specified minimum disinfectant residual. Documentation shall be kept for a period of not less than ten years.

(ii) Records of the lowest daily residual disinfectant concentration and records of the date and duration of any failure to maintain the State-prescribed minimum residual disinfectant concentration for a period of more than four hours. Documentation shall be kept for a period of not less than five years.

(iii) Records of State-specified compliance requirements for membrane filtration and of parameters specified by the State for State-approved alternative treatment and records of the date and duration of any failure to meet the membrane operating, membrane integrity, or alternative treatment operating requirements for more than four hours. Documentation shall be kept for a period of not less than five years.

[71 FR 65653, Nov. 8, 2006, as amended at 78 FR 10353, Feb. 13, 2013]

Subpart T—Enhanced Filtration and Disinfection—Systems Serving Fewer Than 10,000 People

SOURCE: 67 FR 1839, Jan. 14, 2002, unless otherwise noted.

GENERAL REQUIREMENTS

§ 141.500 General requirements.

The requirements of this subpart constitute national primary drinking water regulations. These regulations establish requirements for filtration and disinfection that are in addition to criteria under which filtration and disinfection are required under subpart H of this part. The regulations in this subpart establish or extend treatment technique requirements in lieu of maximum contaminant levels for the following contaminants: *Giardia lamblia*, viruses, heterotrophic plate count bacteria, *Legionella*, *Cryptosporidium* and turbidity. The treatment technique requirements consist of installing and properly operating water treatment processes which reliably achieve:

(a) At least 99 percent (2 log) removal of *Cryptosporidium* between a point where the raw water is not subject to recontamination by surface water runoff and a point downstream before or at the first customer for filtered systems, or *Cryptosporidium* control under the watershed control plan for unfiltered systems; and

(b) Compliance with the profiling and benchmark requirements in §§141.530 through 141.544.

§ 141.501 Who is subject to the requirements of subpart T?

You are subject to these requirements if your system:

(a) Is a public water system;

(b) Uses surface water or GWUDI as a source; and

(c) Serves fewer than 10,000 persons.

§ 141.502 When must my system comply with these requirements?

You must comply with these requirements in this subpart beginning January 1, 2005, except where otherwise noted.

[69 FR 38856, June 29, 2004]

§ 141.503 What does subpart T require?

There are seven requirements of this subpart, and you must comply with all requirements that are applicable to your system. These requirements are:

(a) You must cover any finished water reservoir that you began to construct on or after March 15, 2002 as described in §§ 141.510 and 141.511;

(b) If your system is an unfiltered system, you must comply with the updated watershed control requirements described in §§ 141.520–141.522;

(c) If your system is a community or non-transient non-community water systems you must develop a disinfection profile as described in §§ 141.530–141.536;

(d) If your system is considering making a significant change to its disinfection practices, you must develop a disinfection benchmark and consult with the State for approval of the change as described in §§ 141.540–141.544;

(e) If your system is a filtered system, you must comply with the combined filter effluent requirements as described in §§ 141.550–141.553;

(f) If your system is a filtered system that uses conventional or direct filtration, you must comply with the individual filter turbidity requirements as described in §§ 141.560–141.564; and

(g) You must comply with the applicable reporting and recordkeeping requirements as described in §§ 141.570 and 141.571.

FINISHED WATER RESERVOIRS

§ 141.510 Is my system subject to the new finished water reservoir requirements?

All subpart H systems which serve fewer than 10,000 are subject to this requirement.

§ 141.511 What is required of new finished water reservoirs?

If your system begins construction of a finished water reservoir on or after March 15, 2002 the reservoir must be covered. Finished water reservoirs for which your system began construction prior to March 15, 2002 are not subject to this requirement.

ADDITIONAL WATERSHED CONTROL REQUIREMENTS FOR UNFILTERED SYSTEMS

§ 141.520 Is my system subject to the updated watershed control requirements?

If you are a subpart H system serving fewer than 10,000 persons which does not provide filtration, you must continue to comply with all of the filtration avoidance criteria in § 141.71, as well as the additional watershed control requirements in § 141.521.

§ 141.521 What updated watershed control requirements must my unfiltered system implement to continue to avoid filtration?

Your system must take any additional steps necessary to minimize the potential for contamination by *Cryptosporidium* oocysts in the source water. Your system's watershed control program must, for *Cryptosporidium*:

(a) Identify watershed characteristics and activities which may have an adverse effect on source water quality; and

(b) Monitor the occurrence of activities which may have an adverse effect on source water quality.

§ 141.522 How does the State determine whether my system's watershed control requirements are adequate?

During an onsite inspection conducted under the provisions of § 141.71(b)(3), the State must determine whether your watershed control program is adequate to limit potential contamination by *Cryptosporidium* oocysts. The adequacy of the program must be based on the comprehensiveness of the watershed review; the effectiveness of your program to monitor and control detrimental activities occurring in the watershed; and the extent to which your system has maximized land ownership and/or controlled land use within the watershed.

DISINFECTION PROFILE

§ 141.530 What is a disinfection profile and who must develop one?

A disinfection profile is a graphical representation of your system's level of *Giardia lamblia* or virus inactivation

measured during the course of a year. If you are a subpart H community or non-transient non-community water system which serves fewer than 10,000 persons, your system must develop a disinfection profile unless your State determines that your system's profile is unnecessary. Your State may approve the use of a more representative data set for disinfection profiling than the data set required under §§141.532–141.536.

[67 FR 1839, Jan. 14, 2002, as amended at 69 FR 38856, June 29, 2004]

§ 141.531 What criteria must a State use to determine that a profile is unnecessary?

States may only determine that a system's profile is unnecessary if a system's TTHM and HAA5 levels are below 0.064 mg/L and 0.048 mg/L, respectively. To determine these levels, TTHM and HAA5 samples must be collected after January 1, 1998, during the month with the warmest water temperature, and at the point of maximum residence time in your distribution system. Your State may approve a more representative TTHM and HAA5 data set to determine these levels.

[67 FR 1839, Jan. 14, 2002, as amended at 69 FR 38856, June 29, 2004]

§ 141.532 How does my system develop a disinfection profile and when must it begin?

A disinfection profile consists of three steps:

(a) First, your system must collect data for several parameters from the plant as discussed in §141.533 over the course of 12 months. If your system serves between 500 and 9,999 persons you must begin to collect data no later than July 1, 2003. If your system serves fewer than 500 persons you must begin to collect data no later than January 1, 2004.

(b) Second, your system must use this data to calculate weekly log inactivation as discussed in §§141.534 and 141.535; and

(c) Third, your system must use these weekly log inactivations to develop a disinfection profile as specified in §141.536.

§ 141.533 What data must my system collect to calculate a disinfection profile?

Your system must monitor the following parameters to determine the total log inactivation using the analytical methods in §141.74 (a), once per week on the same calendar day, over 12 consecutive months:

(a) The temperature of the disinfected water at each residual disinfectant concentration sampling point during peak hourly flow;

(b) If your system uses chlorine, the pH of the disinfected water at each residual disinfectant concentration sampling point during peak hourly flow;

(c) The disinfectant contact time(s) (''T'') during peak hourly flow; and

(d) The residual disinfectant concentration(s) (''C'') of the water before or at the first customer and prior to each additional point of disinfection during peak hourly flow.

§ 141.534 How does my system use this data to calculate an inactivation ratio?

Use the tables in §141.74(b)(3)(v) to determine the appropriate CT99.9 value. Calculate the total inactivation ratio as follows, and multiply the value by 3.0 to determine log inactivation of *Giardia lamblia:*

If your system * * *	Your system must determine * * *
(a) Uses only one point of disinfectant application.	(1) One inactivation ratio ($CTcalc/CT_{99.9}$) before or at the first customer during peak hourly flow or (2) Successive $CTcalc/CT_{99.9}$ values, representing sequential inactivation ratios, between the point of disinfectant application and a point before or at the first customer during peak hourly flow. Under this alternative, your system must calculate the total inactivation ratio by determining ($CTcalc/CT_{99.9}$) for each sequence and then adding the ($CTcalc/CT_{99.9}$) values together to determine ($\Sigma CTcalc/CT_{99.9}$).
(b) Uses more than one point of disinfectant application before the first customer.	The ($CTcalc/CT_{99.9}$) value of each disinfection segment immediately prior to the next point of disinfectant application, or for the final segment, before or at the first customer, during peak hourly flow using the procedure specified in paragraph (a)(2) of this section.

[67 FR 1839, Jan. 14, 2002, as amended at 69 FR 38856, June 29, 2004]

§ 141.535 What if my system uses chloramines, ozone, or chlorine dioxide for primary disinfection?

If your system uses chloramines, ozone, or chlorine dioxide for primary disinfection, you must also calculate the logs of inactivation for viruses and develop an additional disinfection profile for viruses using methods approved by the State.

§ 141.536 My system has developed an inactivation ratio; what must we do now?

Each log inactivation serves as a data point in your disinfection profile. Your system will have obtained 52 measurements (one for every week of the year). This will allow your system and the State the opportunity to evaluate how microbial inactivation varied over the course of the year by looking at all 52 measurements (your Disinfection Profile). Your system must retain the Disinfection Profile data in graphic form, such as a spreadsheet, which must be available for review by the State as part of a sanitary survey. Your system must use this data to calculate a benchmark if you are considering changes to disinfection practices.

DISINFECTION BENCHMARK

§ 141.540 Who has to develop a disinfection benchmark?

If you are a subpart H system required to develop a disinfection profile under §§141.530 through 141.536, your system must develop a Disinfection Benchmark if you decide to make a significant change to your disinfection practice. Your system must consult with the State for approval before you can implement a significant disinfection practice change.

§ 141.541 What are significant changes to disinfection practice?

Significant changes to disinfection practice include:

(a) Changes to the point of disinfection;

(b) Changes to the disinfectant(s) used in the treatment plant;

(c) Changes to the disinfection process; or

(d) Any other modification identified by the State.

§ 141.542 What must my system do if we are considering a significant change to disinfection practices?

If your system is considering a significant change to its disinfection practice, your system must calculate a disinfection benchmark(s) as described in §§141.543 and 141.544 and provide the benchmark(s) to your State. Your system may only make a significant disinfection practice change after consulting with the State for approval. Your system must submit the following information to the State as part of the consultation and approval process:

(a) A description of the proposed change;

(b) The disinfection profile for *Giardia lamblia* (and, if necessary, viruses) and disinfection benchmark;

(c) An analysis of how the proposed change will affect the current levels of disinfection; and

(d) Any additional information requested by the State.

§ 141.543 How is the disinfection benchmark calculated?

If your system is making a significant change to its disinfection practice, it must calculate a disinfection benchmark using the procedure specified in the following table.

To calculate a disinfection benchmark your system must perform the following steps
Step 1: Using the data your system collected to develop the Disinfection Profile, determine the average *Giardia lamblia* inactivation for each calendar month by dividing the sum of all *Giardia lamblia* inactivations for that month by the number of values calculated for that month.
Step 2: Determine the lowest monthly average value out of the twelve values. This value becomes the disinfection benchmark.

§ 141.544 What if my system uses chloramines, ozone, or chlorine dioxide for primary disinfection?

If your system uses chloramines, ozone or chlorine dioxide for primary disinfection your system must calculate the disinfection benchmark from the data your system collected for viruses to develop the disinfection profile in addition to the *Giardia lamblia* disinfection benchmark calculated under § 141.543. This viral benchmark must be calculated in the same manner used to calculate the *Giardia lamblia* disinfection benchmark in § 141.543.

COMBINED FILTER EFFLUENT REQUIREMENTS

§ 141.550 Is my system required to meet subpart T combined filter effluent turbidity limits?

All subpart H systems which serve populations fewer than 10,000, are required to filter, and utilize filtration other than slow sand filtration or diatomaceous earth filtration must meet the combined filter effluent turbidity requirements of §§ 141.551–141.553 . If your system uses slow sand or diatomaceous earth filtration you are not required to meet the combined filter effluent turbidity limits of subpart T, but you must continue to meet the combined filter effluent turbidity limits in § 141.73.

§ 141.551 What strengthened combined filter effluent turbidity limits must my system meet?

Your system must meet two strengthened combined filter effluent turbidity limits.

(a) The first combined filter effluent turbidity limit is a ''95th percentile'' turbidity limit that your system must meet in at least 95 percent of the turbidity measurements taken each month. Measurements must continue to be taken as described in § 141.74(a) and (c). Monthly reporting must be completed according to § 141.570. The following table describes the required limits for specific filtration technologies.

If your system consists of * * *	Your 95th percentile turbidity value is * * *
(1) Conventional Filtration or Direct Filtration.	0.3 NTU.
(2) All other ''Alternative'' Filtration	A value determined by the State (not to exceed 1 NTU) based on the demonstration described in § 141.552.

(b) The second combined filter effluent turbidity limit is a ''maximum'' turbidity limit which your system may at no time exceed during the month. Measurements must continue to be taken as described in § 141.74(a) and (c). Monthly reporting must be completed according to § 141.570. The following table describes the required limits for specific filtration technologies.

If your system consists of * * *	Your maximum turbidity value is * * *
(1) Conventional Filtration or Direct Filtration.	1 NTU.
(2) All other ''Alternative Filtration''	A value determined by the State (not to exceed 5 NTU) based on the demonstration as described in § 141.552.

[67 FR 1839, Jan. 14, 2002, as amended at 69 FR 38856, June 29, 2004]

§ 141.552 My system consists of "alternative filtration" and is required to conduct a demonstration—what is required of my system and how does the State establish my turbidity limits?

(a) If your system consists of alternative filtration(filtration other than slow sand filtration, diatomaceous earth filtration, conventional filtration, or direct filtration) you are required to conduct a demonstration (see tables in § 141.551). Your system must demonstrate to the State, using pilot plant studies or other means, that your system's filtration, in combination with disinfection treatment, consistently achieves:

(1) 99 percent removal of *Cryptosporidium* oocysts;

(2) 99.9 percent removal and/or inactivation of *Giardia lamblia* cysts; and

(3) 99.99 percent removal and/or inactivation of viruses.

(b) [Reserved]

§ 141.553 My system practices lime softening—is there any special provision regarding my combined filter effluent?

If your system practices lime softening, you may acidify representative combined filter effluent turbidity samples prior to analysis using a protocol approved by the State.

INDIVIDUAL FILTER TURBIDITY REQUIREMENTS

§ 141.560 Is my system subject to individual filter turbidity requirements?

If your system is a subpart H system serving fewer than 10,000 people and utilizing conventional filtration or direct filtration, you must conduct continuous monitoring of turbidity for each individual filter at your system. The following requirements apply to continuous turbidity monitoring:

(a) Monitoring must be conducted using an approved method in § 141.74(a);

(b) Calibration of turbidimeters must be conducted using procedures specified by the manufacturer;

(c) Results of turbidity monitoring must be recorded at least every 15 minutes;

(d) Monthly reporting must be completed according to § 141.570; and

(e) Records must be maintained according to § 141.571.

§ 141.561 What happens if my system's turbidity monitoring equipment fails?

If there is a failure in the continuous turbidity monitoring equipment, your system must conduct grab sampling every four hours in lieu of continuous monitoring until the turbidimeter is back on-line. Your system has 14 days to resume continuous monitoring before a violation is incurred.

§ 141.562 My system only has two or fewer filters—is there any special provision regarding individual filter turbidity monitoring?

Yes, if your system only consists of two or fewer filters, you may conduct continuous monitoring of combined filter effluent turbidity in lieu of individual filter effluent turbidity monitoring. Continuous monitoring must meet the same requirements set forth in § 141.560(a) through (d) and § 141.561.

§ 141.563 What follow-up action is my system required to take based on continuous turbidity monitoring?

Follow-up action is required according to the following tables:

If * * *	Your system must * * *
(a) The turbidity of an individual filter (or the turbidity of combined filter effluent (CFE) for systems with 2 filters that monitor CFE in lieu of individual filters) exceeds 1.0 NTU in two consecutive recordings 15 minutes apart.	Report to the State by the 10th of the following month and include the filter number(s), corresponding date(s), turbidity value(s) which exceeded 1.0 NTU, and the cause (if known) for the exceedance(s).

If a system was required to report to the State * * *	Your system must * * *
(b) For three months in a row and turbidity exceeded 1.0 NTU in two consecutive recordings 15 minutes apart at the same filter (or CFE for systems with 2 filters that monitor CFE in lieu of individual filters).	Conduct a self-assessment of the filter(s) within 14 days of the day the filter exceeded 1.0 NTU in two consecutive measurements for the third straight month unless a CPE as specified in paragraph (c) of this section was required. Systems with 2 filters that monitor CFE in lieu of individual filters must conduct a self assessment on both filters. The self-assessment must consist of at least the following components: assessment of filter performance; development of a filter profile; identification and prioritization of factors limiting filter performance; assessment of the applicability of corrections; and preparation of a filter self-assessment report.
(c) For two months in a row and turbidity exceeded 2.0 NTU in 2 consecutive recordings 15 minutes apart at the same filter (or CFE for systems with 2 filters that monitor CFE in lieu of individual filters).	Arrange to have a comprehensive performance evaluation (CPE) conducted by the State or a third party approved by the State not later than 60 days following the day the filter exceeded 2.0 NTU in two consecutive measurements for the second straight month. If a CPE has been completed by the State or a third party approved by the State within the 12 prior months or the system and State are jointly participating in an ongoing Comprehensive Technical Assistance (CTA) project at the system, a new CPE is not required. If conducted, a CPE must be completed and submitted to the State no later than 120 days following the day the filter exceeded 2.0 NTU in two consecutive measurements for the second straight month.

[67 FR 1839, Jan. 14, 2002, as amended at 69 FR 38856, June 29, 2004]

§ 141.564 My system practices lime softening—is there any special provision regarding my individual filter turbidity monitoring?

If your system utilizes lime softening, you may apply to the State for alternative turbidity exceedance levels for the levels specified in the table in § 141.563. You must be able to demonstrate to the State that higher turbidity levels are due to lime carryover only, and not due to degraded filter performance.

REPORTING AND RECORDKEEPING REQUIREMENTS

§ 141.570 What does subpart T require that my system report to the State?

This subpart T requires your system to report several items to the State. The following table describes the items which must be reported and the frequency of reporting. Your system is required to report the information described in the following table, if it is subject to the specific requirement shown in the first column.

Corresponding requirement	Description of information to report	Frequency
(a) Combined Filter Effluent Requirements. (§§ 141.550–141.553)	(1) The total number of filtered water turbidity measurements taken during the month.	By the 10th of the following month.
	(2) The number and percentage of filtered water turbidity measurements taken during the month which are less than or equal to your system's required 95th percentile limit.	By the 10th of the following month.
	(3) The date and value of any turbidity measurements taken during the month which exceed the maximum turbidity value for your filtration system.	By the 10th of the following month.
(b) Individual Turbidity Requirements. (§§ 141.560–141.564)	(1) That your system conducted individual filter turbidity monitoring during the month.	By the 10th of the following month.
	(2) The filter number(s), corresponding date(s), and the turbidity value(s) which exceeded 1.0 NTU during the month, and the cause (if known) for the exceedance(s), but only if 2 consecutive measurements exceeded 1.0 NTU.	By the 10th of the following month.
	(3) If a self-assessment is required, the date that it was triggered and the date that it was completed.	By the 10th of the following month (or 14 days after the self-assessment was triggered only if the self-assessment was triggered during the last four days of the month)
	(4) If a CPE is required, that the CPE is required and the date that it was triggered.	By the 10th of the following month.
	(5) Copy of completed CPE report	Within 120 days after the CPE was triggered.
(c) Disinfection Profiling ..... (§§ 141.530–141.536)	(1) Results of optional monitoring which show TTHM levels <0.064 mg/l and HAA5 levels <0.048 mg/l (Only if your system wishes to forgo profiling) or that your system has begun disinfection profiling.	(i) For systems serving 500–9,999 by July 1, 2003; (ii) For systems serving fewer than 500 by January 1, 2004.
(d) Disinfection Benchmarking. (§§ 141.540–141.544)	(1) A description of the proposed change in disinfection, your system's disinfection profile for Giardia lamblia (and, if necessary, viruses) and disinfection benchmark, and an analysis of how the proposed change will affect the current levels of disinfection.	Anytime your system is considering a significant change to its disinfection practice.

[67 FR 1839, Jan. 14, 2002, as amended at 69 FR 38857, June 29, 2004]

§ 141.571 What records does subpart T require my system to keep?

Your system must keep several types of records based on the requirements of subpart T, in addition to recordkeeping requirements under § 141.75. The following table describes the necessary records, the length of time these records must be kept, and for which requirement the records pertain. Your

system is required to maintain records described in this table, if it is subject to the specific requirement shown in the first column.

Corresponding requirement	Description of necessary records	Duration of time records must be kept
(a) Individual Filter Turbidity Requirements (§§ 141.560–141.564)	Results of individual filter monitoring	At least 3 years.
(b) Disinfection Profiling (§§ 141.530–141.536)	Results of Profile (including raw data and analysis)	Indefinitely.
(c) Disinfection Benchmarking (§§ 141.540–141.544)	Benchmark (including raw data and analysis)	Indefinitely.

Subpart U—Initial Distribution System Evaluations

SOURCE: 71 FR 483, Jan. 4, 2006, unless otherwise noted.

§ 141.600 General requirements.

(a) The requirements of subpart U of this part constitute national primary drinking water regulations. The regulations in this subpart establish monitoring and other requirements for identifying subpart V compliance monitoring locations for determining compliance with maximum contaminant levels for total trihalomethanes (TTHM) and haloacetic acids (five)(HAA5). You must use an Initial Distribution System Evaluation (IDSE) to determine locations with representative high TTHM and HAA5 concentrations throughout your distribution system. IDSEs are used in conjunction with, but separate from, subpart L compliance monitoring, to identify and select subpart V compliance monitoring locations.

(b) *Applicability*. You are subject to these requirements if your system is a community water system that uses a primary or residual disinfectant other than ultraviolet light or delivers water that has been treated with a primary or residual disinfectant other than ultraviolet light; or if your system is a nontransient noncommunity water system that serves at least 10,000 people and uses a primary or residual disinfectant other than ultraviolet light or delivers water that has been treated with a primary or residual disinfectant other than ultraviolet light.

(c) *Schedule*. (1) You must comply with the requirements of this subpart on the schedule in the table in this paragraph (c)(1).

If you serve this population	You must submit your standard monitoring plan or system specific study plan [1] or 40/30 certification [2] to the State by or receive very small system waiver from State	You must complete your standard monitoring or system specific study by	You must submit your IDSE report to the State by [3]
Systems that are not part of a combined distribution system and systems that serve the largest population in the combined distribution system			
(i) ≥100,000	October 1, 2006	September 30, 2008	January 1, 2009.
(ii) 50,000–99,999	April 1, 2007	March 31, 2009	July 1, 2009.
(iii) 10,000–49,999.	October 1, 2007	September 30, 2009	January 1, 2010.
(iv) <10,000 (CWS Only).	April 1, 2008	March 31, 2010	July 1, 2010.
Other systems that are part of a combined distribution system			
(v) Wholesale system or consecutive system.	—at the same time as the system with the earliest compliance date in the combined distribution system.	—at the same time as the system with the earliest compliance date in the combined distribution system.	—at the same time as the system with the earliest compliance date in the combined distribution system.

[1] If, within 12 months after the date identified in this column, the State does not approve your plan or notify you that it has not yet completed its review, you may consider the plan that you submitted as approved. You must implement that plan and you must complete standard monitoring or a system specific study no later than the date identified in the third column.

[2] You must submit your 40/30 certification under § 141.603 by the date indicated.

[3] If, within three months after the date identified in this column (nine months after the date identified in this column if you must comply on the schedule in paragraph (c)(1)(iii) of this section), the State does not approve your IDSE report or notify you that it has not yet completed its review, you may consider the report that you submitted as approved and you must implement the recommended subpart V monitoring as required.

(2) For the purpose of the schedule in paragraph (c)(1) of this section, the State may determine that the combined distribution system does not include certain consecutive systems based on factors such as receiving water from a wholesale system only on an emergency basis or receiving only a small percentage and small volume of water from a wholesale system. The State may also determine that the combined distribution system does not include certain wholesale systems based on factors such as delivering water to a consecutive system only on an emergency basis or delivering only a small percentage and small volume of water to a consecutive system.

(d) You must conduct standard monitoring that meets the requirements in § 141.601, or a system specific study that meets the requirements in § 141.602, or certify to the State that you meet 40/30 certification criteria under § 141.603, or qualify for a very small system waiver under § 141.604.

(1) You must have taken the full complement of routine TTHM and HAA5 compliance samples required of a system with your population and source water under subpart L of this part (or you must have taken the full complement of reduced TTHM and HAA5 compliance samples required of a system with your population and source water under subpart L if you meet reduced monitoring criteria under subpart L of this part) during the period specified in § 141.603(a) to meet the 40/30 certification criteria in § 141.603. You must have taken TTHM and HAA5 samples under §§ 141.131 and 141.132 to be eligible for the very small system waiver in § 141.604.

(2) If you have not taken the required samples, you must conduct standard monitoring that meets the requirements in § 141.601, or a system specific study that meets the requirements in § 141.602.

(e) You must use only the analytical methods specified in § 141.131, or otherwise approved by EPA for monitoring under this subpart, to demonstrate compliance with the requirements of this subpart.

(f) IDSE results will not be used for the purpose of determining compliance with MCLs in § 141.64.

§ 141.601 Standard monitoring.

(a) *Standard monitoring plan.* Your standard monitoring plan must comply with paragraphs (a)(1) through (a)(4) of this section. You must prepare and submit your standard monitoring plan to the State according to the schedule in § 141.600(c).

(1) Your standard monitoring plan must include a schematic of your distribution system (including distribution system entry points and their sources, and storage facilities), with notes indicating locations and dates of all projected standard monitoring, and all projected subpart L compliance monitoring.

(2) Your standard monitoring plan must include justification of standard monitoring location selection and a summary of data you relied on to justify standard monitoring location selection.

(3) Your standard monitoring plan must specify the population served and system type (subpart H or ground water).

(4) You must retain a complete copy of your standard monitoring plan submitted under this paragraph (a), including any State modification of your standard monitoring plan, for as long as you are required to retain your IDSE report under paragraph (c)(4) of this section.

(b) *Standard monitoring.* (1) You must monitor as indicated in the table in this paragraph (b)(1). You must collect dual sample sets at each monitoring location. One sample in the dual sample set must be analyzed for TTHM. The other sample in the dual sample set must be analyzed for HAA5. You must conduct one monitoring period during the peak historical month for TTHM levels or HAA5 levels or the month of warmest water temperature. You must review available compliance, study, or operational data to determine the peak historical month for TTHM or HAA5 levels or warmest water temperature.

Source water type	Population size category	Monitoring periods and frequency of sampling	Distribution system monitoring locations [1]				
			Total per monitoring period	Near entry points	Average residence time	High TTHM locations	High HAA5 locations
Subpart H							
	<500 consecutive systems.	one (during peak historical month) [2].	2	1	.....	1	
	<500 non-consecutive systems.	.....	2	.....	.....	1	1
	500–3,300 consecutive systems.	four (every 90 days)	2	1	.....	1	
	500–3,300 non-consecutive systems.	.....	2	.....	.....	1	1
	3,301–9,999	.....	4	.....	1	2	1
	10,000–49,999	six (every 60 days)	8	1	2	3	2
	50,000–249,999	.....	16	3	4	5	4
	250,000–999,999	.....	24	4	6	8	6
	1,000,000–4,999,999	.....	32	6	8	10	8
	≥5,000,000	.....	40	8	10	12	10
Ground Water							
	<500 consecutive systems.	one (during peak historical month) [2].	2	1	.....	1	
	<500 non-consecutive systems.	.....	2	.....	.....	1	1
	500–9,999	four (every 90 days)	2	.....	.....	1	1
	10,000–99,999	.....	6	1	1	2	2
	100,000–499,999	.....	8	1	1	3	3
	≥500,000	.....	12	2	2	4	4

[1] A dual sample set (*i.e.*, a TTHM and an HAA5 sample) must be taken at each monitoring location during each monitoring period.
[2] The peak historical month is the month with the highest TTHM or HAA5 levels or the warmest water temperature.

(2) You must take samples at locations other than the existing subpart L monitoring locations. Monitoring locations must be distributed throughout the distribution system.

(3) If the number of entry points to the distribution system is fewer than the specified number of entry point monitoring locations, excess entry point samples must be replaced equally at high TTHM and HAA5 locations. If there is an odd extra location number, you must take a sample at a high TTHM location. If the number of entry points to the distribution system is more than the specified number of entry point monitoring locations, you must take samples at entry points to the distribution system having the highest annual water flows.

(4) Your monitoring under this paragraph (b) may not be reduced under the provisions of § 141.29 and the State may not reduce your monitoring using the provisions of § 142.16(m).

(c) *IDSE report*. Your IDSE report must include the elements required in paragraphs (c)(1) through (c)(4) of this section. You must submit your IDSE report to the State according to the schedule in § 141.600(c).

(1) Your IDSE report must include all TTHM and HAA5 analytical results from subpart L compliance monitoring and all standard monitoring conducted during the period of the IDSE as individual analytical results and LRAAs presented in a tabular or spreadsheet format acceptable to the State. If changed from your standard monitoring plan submitted under paragraph (a) of this section, your report must also include a schematic of your distribution system, the population served, and system type (subpart H or ground water).

(2) Your IDSE report must include an explanation of any deviations from your approved standard monitoring plan.

(3) You must recommend and justify subpart V compliance monitoring locations and timing based on the protocol in § 141.605.

(4) You must retain a complete copy of your IDSE report submitted under this section for 10 years after the date that you submitted your report. If the

State modifies the subpart V monitoring requirements that you recommended in your IDSE report or if the State approves alternative monitoring locations, you must keep a copy of the State's notification on file for 10 years after the date of the State's notification. You must make the IDSE report and any State notification available for review by the State or the public.

§ 141.602 System specific studies.

(a) *System specific study plan.* Your system specific study plan must be based on either existing monitoring results as required under paragraph (a)(1) of this section or modeling as required under paragraph (a)(2) of this section. You must prepare and submit your system specific study plan to the State according to the schedule in § 141.600(c).

(1) *Existing monitoring results.* You may comply by submitting monitoring results collected before you are required to begin monitoring under § 141.600(c). The monitoring results and analysis must meet the criteria in paragraphs (a)(1)(i) and (a)(1)(ii) of this section.

(i) *Minimum requirements.* (A) TTHM and HAA5 results must be based on samples collected and analyzed in accordance with § 141.131. Samples must be collected no earlier than five years prior to the study plan submission date.

(B) The monitoring locations and frequency must meet the conditions identified in this paragraph (a)(1)(i)(B). Each location must be sampled once during the peak historical month for TTHM levels or HAA5 levels or the month of warmest water temperature for every 12 months of data submitted for that location. Monitoring results must include all subpart L compliance monitoring results plus additional monitoring results as necessary to meet minimum sample requirements.

System Type	Population size category	Number of monitoring locations	Number of samples	
			TTHM	HAA5
Subpart H:				
	<500	3	3	3
	500–3,300	3	9	9
	3,301–9,999	6	36	36
	10,000–49,999	12	72	72
	50,000–249,999	24	144	144
	250,000–999,999	36	216	216
	1,000,000–4,999,999	48	288	288
	≥5,000,000	60	360	360
Ground Water:				
	<500	3	3	3
	500–9,999	3	9	9
	10,000–99,999	12	48	48
	100,000–499,999	18	72	72
	≥500,000	24	96	96

(ii) *Reporting monitoring results.* You must report the information in this paragraph (a)(1)(ii).

(A) You must report previously collected monitoring results and certify that the reported monitoring results include all compliance and non-compliance results generated during the time period beginning with the first reported result and ending with the most recent subpart L results.

(B) You must certify that the samples were representative of the entire distribution system and that treatment, and distribution system have not changed significantly since the samples were collected.

(C) Your study monitoring plan must include a schematic of your distribution system (including distribution system entry points and their sources, and storage facilities), with notes indicating the locations and dates of all completed or planned system specific study monitoring.

(D) Your system specific study plan must specify the population served and system type (subpart H or ground water).

(E) You must retain a complete copy of your system specific study plan submitted under this paragraph (a)(1), including any State modification of your system specific study plan, for as long as you are required to retain your IDSE report under paragraph (b)(5) of this section.

(F) If you submit previously collected data that fully meet the number of samples required under paragraph (a)(1)(i)(B) of this section and the State rejects some of the data, you must either conduct additional monitoring to replace rejected data on a schedule the State approves or conduct standard monitoring under § 141.601.

(2) *Modeling*. You may comply through analysis of an extended period simulation hydraulic model. The extended period simulation hydraulic model and analysis must meet the criteria in this paragraph (a)(2).

(i) *Minimum requirements*. (A) The model must simulate 24 hour variation in demand and show a consistently repeating 24 hour pattern of residence time.

(B) The model must represent the criteria listed in paragraphs (a)(2)(i)(B)(1) through (9) of this section.

(1) 75% of pipe volume;

(2) 50% of pipe length;

(3) All pressure zones;

(4) All 12-inch diameter and larger pipes;

(5) All 8-inch and larger pipes that connect pressure zones, influence zones from different sources, storage facilities, major demand areas, pumps, and control valves, or are known or expected to be significant conveyors of water;

(6) All 6-inch and larger pipes that connect remote areas of a distribution system to the main portion of the system;

(7) All storage facilities with standard operations represented in the model; and

(8) All active pump stations with controls represented in the model; and

(9) All active control valves.

(C) The model must be calibrated, or have calibration plans, for the current configuration of the distribution system during the period of high TTHM formation potential. All storage facilities must be evaluated as part of the calibration process. All required calibration must be completed no later than 12 months after plan submission.

(ii) *Reporting modeling*. Your system specific study plan must include the information in this paragraph (a)(2)(ii).

(A) Tabular or spreadsheet data demonstrating that the model meets requirements in paragraph (a)(2)(i)(B) of this section.

(B) A description of all calibration activities undertaken, and if calibration is complete, a graph of predicted tank levels versus measured tank levels for the storage facility with the highest residence time in each pressure zone, and a time series graph of the residence time at the longest residence time storage facility in the distribution system showing the predictions for the entire simulation period (*i.e.*, from time zero until the time it takes to for the model to reach a consistently repeating pattern of residence time).

(C) Model output showing preliminary 24 hour average residence time predictions throughout the distribution system.

(D) Timing and number of samples representative of the distribution system planned for at least one monitoring period of TTHM and HAA5 dual sample monitoring at a number of locations no less than would be required for the system under standard monitoring in § 141.601 during the historical month of high TTHM. These samples must be taken at locations other than existing subpart L compliance monitoring locations.

(E) Description of how all requirements will be completed no later than 12 months after you submit your system specific study plan.

(F) Schematic of your distribution system (including distribution system entry points and their sources, and storage facilities), with notes indicating the locations and dates of all completed system specific study monitoring (if calibration is complete) and all subpart L compliance monitoring.

(G) Population served and system type (subpart H or ground water).

(H) You must retain a complete copy of your system specific study plan submitted under this paragraph (a)(2), including any State modification of your system specific study plan, for as long as you are required to retain your IDSE report under paragraph (b)(7) of this section.

(iii) If you submit a model that does not fully meet the requirements under paragraph (a)(2) of this section, you must correct the deficiencies and respond to State inquiries concerning the model. If you fail to correct deficiencies or respond to inquiries to the State's satisfaction, you must conduct standard monitoring under § 141.601.

(b) *IDSE report*. Your IDSE report must include the elements required in paragraphs (b)(1) through (b)(6) of this section. You must submit your IDSE report according to the schedule in § 141.600(c).

(1) Your IDSE report must include all TTHM and HAA5 analytical results from subpart L compliance monitoring and all system specific study monitoring conducted during the period of the system specific study presented in a tabular or spreadsheet format acceptable to the State. If changed from your system specific study plan submitted under paragraph (a) of this section, your IDSE report must also include a schematic of your distribution system, the population served, and system type (subpart H or ground water).

(2) If you used the modeling provision under paragraph (a)(2) of this section, you must include final information for the elements described in paragraph (a)(2)(ii) of this section, and a 24-hour time series graph of residence time for each subpart V compliance monitoring location selected.

(3) You must recommend and justify subpart V compliance monitoring locations and timing based on the protocol in § 141.605.

(4) Your IDSE report must include an explanation of any deviations from your approved system specific study plan.

(5) Your IDSE report must include the basis (analytical and modeling results) and justification you used to select the recommended subpart V monitoring locations.

(6) You may submit your IDSE report in lieu of your system specific study plan on the schedule identified in § 141.600(c) for submission of the system specific study plan if you believe that you have the necessary information by the time that the system specific study plan is due. If you elect this approach, your IDSE report must also include all information required under paragraph (a) of this section.

(7) You must retain a complete copy of your IDSE report submitted under this section for 10 years after the date that you submitted your IDSE report. If the State modifies the subpart V monitoring requirements that you recommended in your IDSE report or if the State approves alternative monitoring locations, you must keep a copy of the State's notification on file for 10 years after the date of the State's notification. You must make the IDSE report and any State notification available for review by the State or the public.

§ 141.603 40/30 certification.

(a) *Eligibility*. You are eligible for 40/30 certification if you had no TTHM or HAA5 monitoring violations under subpart L of this part and no individual sample exceeded 0.040 mg/L for TTHM or 0.030 mg/L for HAA5 during an eight consecutive calendar quarter period beginning no earlier than the date specified in this paragraph (a).

If your 40/30 certification is due	Then your eligibility for 40/30 certification is based on eight consecutive calendar quarters of subpart L compliance monitoring results beginning no earlier than [1]
(1) October 1, 2006	January 2004.
(2) April 1, 2007	January 2004.
(3) October 1, 2007	January 2005.
(4) April 1, 2008	January 2005.

[1] Unless you are on reduced monitoring under subpart L of this part and were not required to monitor during the specified period. If you did not monitor during the specified period, you must base your eligibility on compliance samples taken during the 12 months preceding the specified period.

(b) *40/30 certification*. (1) You must certify to your State that every individual compliance sample taken under subpart L of this part during the periods specified in paragraph (a) of this section were ≤0.040 mg/L for TTHM and ≤0.030 mg/L for HAA5, and that you have not had any TTHM or HAA5 monitoring violations during the period

specified in paragraph (a) of this section.

(2) The State may require you to submit compliance monitoring results, distribution system schematics, and/or recommended subpart V compliance monitoring locations in addition to your certification. If you fail to submit the requested information, the State may require standard monitoring under § 141.601 or a system specific study under § 141.602.

(3) The State may still require standard monitoring under § 141.601 or a system specific study under § 141.602 even if you meet the criteria in paragraph (a) of this section.

(4) You must retain a complete copy of your certification submitted under this section for 10 years after the date that you submitted your certification. You must make the certification, all data upon which the certification is based, and any State notification available for review by the State or the public.

§ 141.604 Very small system waivers.

(a) If you serve fewer than 500 people and you have taken TTHM and HAA5 samples under subpart L of this part, you are not required to comply with this subpart unless the State notifies you that you must conduct standard monitoring under § 141.601 or a system specific study under § 141.602.

(b) If you have not taken TTHM and HAA5 samples under subpart L of this part or if the State notifies you that you must comply with this subpart, you must conduct standard monitoring under § 141.601 or a system specific study under § 141.602.

§ 141.605 Subpart V compliance monitoring location recommendations.

(a) Your IDSE report must include your recommendations and justification for where and during what month(s) TTHM and HAA5 monitoring for subpart V of this part should be conducted. You must base your recommendations on the criteria in paragraphs (b) through (e) of this section.

(b) You must select the number of monitoring locations specified in the table in this paragraph (b). You will use these recommended locations as subpart V routine compliance monitoring locations, unless State requires different or additional locations. You should distribute locations throughout the distribution system to the extent possible.

Source water type	Population size category	Monitoring frequency [1]	Distribution system monitoring location			
			Total per monitoring period [2]	Highest TTHM locations	Highest HAA5 locations	Existing subpart L compliance locations
Subpart H:						
	<500	per year	2	1	1	
	500–3,300	per quarter	2	1	1	
	3,301–9,999	per quarter	2	1	1	
	10,000–49,999	per quarter	4	2	1	1
	50,000–249,999	per quarter	8	3	3	2
	250,000–999,999	per quarter	12	5	4	3
	1,000,000–4,999,999	per quarter	16	6	6	4
	≥5,000,000	per quarter	20	8	7	5
Ground water:						
	<500	per year	2	1	1	
	500–9,999	per year	2	1	1	
	10,000–99,999	per quarter	4	2	1	1
	100,000–499,999	per quarter	6	3	2	1
	≥500,000	per quarter	8	3	3	2

[1] All systems must monitor during month of highest DBP concentrations.

[2] Systems on quarterly monitoring must take dual sample sets every 90 days at each monitoring location, except for subpart H systems serving 500–3,300. Ground water systems serving 500–9,999 on annual monitoring must take dual sample sets at each monitoring location. All other systems on annual monitoring and subpart H systems serving 500–3,300 are required to take individual TTHM and HAA5 samples (instead of a dual sample set) at the locations with the highest TTHM and HAA5 concentrations, respectively. For systems serving fewer than 500 people, only one location with a dual sample set per monitoring period is needed if the highest TTHM and HAA5 concentrations occur at the same location and month.

(c) You must recommend subpart V compliance monitoring locations based on standard monitoring results, system specific study results, and subpart L compliance monitoring results. You must follow the protocol in paragraphs (c)(1) through (c)(8) of this section. If required to monitor at more than eight locations, you must repeat the protocol as necessary. If you do not have existing subpart L compliance monitoring results or if you do not have enough existing subpart L compliance monitoring results, you must repeat the protocol, skipping the provisions of paragraphs (c)(3) and (c)(7) of this section as necessary, until you have identified the required total number of monitoring locations.

(1) Location with the highest TTHM LRAA not previously selected as a subpart V monitoring location.

(2) Location with the highest HAA5 LRAA not previously selected as a subpart V monitoring location.

(3) Existing subpart L average residence time compliance monitoring location (maximum residence time compliance monitoring location for ground water systems) with the highest HAA5 LRAA not previously selected as a subpart V monitoring location.

(4) Location with the highest TTHM LRAA not previously selected as a subpart V monitoring location.

(5) Location with the highest TTHM LRAA not previously selected as a subpart V monitoring location.

(6) Location with the highest HAA5 LRAA not previously selected as a subpart V monitoring location.

(7) Existing subpart L average residence time compliance monitoring location (maximum residence time compliance monitoring location for ground water systems) with the highest TTHM LRAA not previously selected as a subpart V monitoring location.

(8) Location with the highest HAA5 LRAA not previously selected as a subpart V monitoring location.

(d) You may recommend locations other than those specified in paragraph (c) of this section if you include a rationale for selecting other locations. If the State approves the alternate locations, you must monitor at these locations to determine compliance under subpart V of this part.

(e) Your recommended schedule must include subpart V monitoring during the peak historical month for TTHM and HAA5 concentration, unless the State approves another month. Once you have identified the peak historical month, and if you are required to conduct routine monitoring at least quarterly, you must schedule subpart V compliance monitoring at a regular frequency of every 90 days or fewer.

[71 FR 483, Jan. 4, 2006, as amended at 74 FR 30958, June 29, 2009]

Subpart V—Stage 2 Disinfection Byproducts Requirements

SOURCE: 71 FR 488, Jan. 4, 2006, unless otherwise noted.

§ 141.620 General requirements.

(a) *General.* The requirements of subpart V of this part constitute national primary drinking water regulations. The regulations in this subpart establish monitoring and other requirements for achieving compliance with maximum contaminant levels based on locational running annual averages (LRAA) for total trihalomethanes (TTHM) and haloacetic acids (five)(HAA5), and for achieving compliance with maximum residual disinfectant residuals for chlorine and chloramine for certain consecutive systems.

(b) *Applicability.* You are subject to these requirements if your system is a community water system or a nontransient noncommunity water system that uses a primary or residual disinfectant other than ultraviolet light or delivers water that has been treated with a primary or residual disinfectant other than ultraviolet light.

(c) *Schedule.* You must comply with the requirements in this subpart on the schedule in the following table based on your system type.

If you are this type of system	You must comply with subpart V monitoring by: [1]
Systems that are not part of a combined distribution system and systems that serve the largest population in the combined distribution system	
(1) System serving ≥100,000	April 1, 2012.
(2) System serving 50,000–99,999	October 1, 2012.
(3) System serving 10,000–49,999	October 1, 2013.
(4) System serving <10,000	October 1, 2013 if no *Cryptosporidium* monitoring is required under § 141.701(a)(4) or October 1, 2014 if *Cryptosporidium* monitoring is required under § 141.701(a)(4) or (a)(6)
Other systems that are part of a combined distribution system	
(5) Consecutive system or wholesale system	—at the same time as the system with the earliest compliance date in the combined distribution system.

[1] The State may grant up to an additional 24 months for compliance with MCLs and operational evaluation levels if you require capital improvements to comply with an MCL.

(6) Your monitoring frequency is specified in § 141.621(a)(2).

(i) If you are required to conduct quarterly monitoring, you must begin monitoring in the first full calendar quarter that includes the compliance date in the table in this paragraph (c).

(ii) If you are required to conduct monitoring at a frequency that is less than quarterly, you must begin monitoring in the calendar month recommended in the IDSE report prepared under § 141.601 or § 141.602 or the calendar month identified in the subpart V monitoring plan developed under § 141.622 no later than 12 months after the compliance date in this table.

(7) If you are required to conduct quarterly monitoring, you must make compliance calculations at the end of the fourth calendar quarter that follows the compliance date and at the end of each subsequent quarter (or earlier if the LRAA calculated based on fewer than four quarters of data would cause the MCL to be exceeded regardless of the monitoring results of subsequent quarters). If you are required to conduct monitoring at a frequency that is less than quarterly, you must make compliance calculations beginning with the first compliance sample taken after the compliance date.

(8) For the purpose of the schedule in this paragraph (c), the State may determine that the combined distribution system does not include certain consecutive systems based on factors such as receiving water from a wholesale system only on an emergency basis or receiving only a small percentage and small volume of water from a wholesale system. The State may also determine that the combined distribution system does not include certain wholesale systems based on factors such as delivering water to a consecutive system only on an emergency basis or delivering only a small percentage and small volume of water to a consecutive system.

(d) *Monitoring and compliance*—(1) *Systems required to monitor quarterly*. To comply with subpart V MCLs in § 141.64(b)(2), you must calculate LRAAs for TTHM and HAA5 using monitoring results collected under this subpart and determine that each LRAA does not exceed the MCL. If you fail to complete four consecutive quarters of monitoring, you must calculate compliance with the MCL based on the average of the available data from the most recent four quarters. If you take more than one sample per quarter at a monitoring location, you must average all samples taken in the quarter at that location to determine a quarterly average to be used in the LRAA calculation.

(2) *Systems required to monitor yearly or less frequently*. To determine compliance with subpart V MCLs in § 141.64(b)(2), you must determine that each sample taken is less than the MCL. If any sample exceeds the MCL, you must comply with the requirements of § 141.625. If no sample exceeds the MCL, the sample result for each monitoring location is considered the LRAA for that monitoring location.

(e) *Violation*. You are in violation of the monitoring requirements for each quarter that a monitoring result would

be used in calculating an LRAA if you fail to monitor.

[71 FR 488, Jan. 4, 2006; 71 FR 4645, Jan. 27, 2006]

§ 141.621 Routine monitoring.

(a) *Monitoring.* (1) If you submitted an IDSE report, you must begin monitoring at the locations and months you have recommended in your IDSE report submitted under § 141.605 following the schedule in § 141.620(c), unless the State requires other locations or additional locations after its review. If you submitted a 40/30 certification under § 141.603 or you qualified for a very small system waiver under § 141.604 or you are a nontransient noncommunity water system serving <10,000, you must monitor at the location(s) and dates identified in your monitoring plan in § 141.132(f), updated as required by § 141.622.

(2) You must monitor at no fewer than the number of locations identified in this paragraph (a)(2).

Source water type	Population size category	Monitoring Frequency [1]	Distribution system monitoring location total per monitoring period [2]
Subpart H:			
	<500	per year	2
	500–3,300	per quarter	2
	3,301–9,999	per quarter	2
	10,000–49,999	per quarter	4
	50,000–249,999	per quarter	8
	250,000–999,999	per quarter	12
	1,000,000–4,999,999	per quarter	16
	≥5,000,000	per quarter	20
Ground Water:			
	<500	per year	2
	500–9,999	per year	2
	10,000–99,999	per quarter	4
	100,000–499,999	per quarter	6
	≥500,000	per quarter	8

[1] All systems must monitor during month of highest DBP concentrations.
[2] Systems on quarterly monitoring must take dual sample sets every 90 days at each monitoring location, except for subpart H systems serving 500–3,300. Ground water systems serving 500–9,999 on annual monitoring must take dual sample sets at each monitoring location. All other systems on annual monitoring and subpart H systems serving 500–3,300 are required to take individual TTHM and HAA5 samples (instead of a dual sample set) at the locations with the highest TTHM and HAA5 concentrations, respectively. For systems serving fewer than 500 people, only one location with a dual sample set per monitoring period is needed if the highest TTHM and HAA5 concentrations occur at the same location and month.

(3) If you are an undisinfected system that begins using a disinfectant other than UV light after the dates in subpart U of this part for complying with the Initial Distribution System Evaluation requirements, you must consult with the State to identify compliance monitoring locations for this subpart. You must then develop a monitoring plan under § 141.622 that includes those monitoring locations.

(b) *Analytical methods.* You must use an approved method listed in § 141.131 for TTHM and HAA5 analyses in this subpart. Analyses must be conducted by laboratories that have received certification by EPA or the State as specified in § 141.131.

[71 FR 488, Jan. 4, 2006, as amended at 74 FR 30958, June 29, 2009]

§ 141.622 Subpart V monitoring plan.

(a)(1) You must develop and implement a monitoring plan to be kept on file for State and public review. The monitoring plan must contain the elements in paragraphs (a)(1)(i) through (a)(1)(iv) of this section and be complete no later than the date you conduct your initial monitoring under this subpart.

(i) Monitoring locations;

(ii) Monitoring dates;

(iii) Compliance calculation procedures; and

(iv) Monitoring plans for any other systems in the combined distribution system if the State has reduced monitoring requirements under the State authority in § 142.16(m).

(2) If you were not required to submit an IDSE report under either § 141.601 or

§ 141.602, and you do not have sufficient subpart L monitoring locations to identify the required number of subpart V compliance monitoring locations indicated in § 141.605(b), you must identify additional locations by alternating selection of locations representing high TTHM levels and high HAA5 levels until the required number of compliance monitoring locations have been identified. You must also provide the rationale for identifying the locations as having high levels of TTHM or HAA5. If you have more subpart L monitoring locations than required for subpart V compliance monitoring in § 141.605(b), you must identify which locations you will use for subpart V compliance monitoring by alternating selection of locations representing high TTHM levels and high HAA5 levels until the required number of subpart V compliance monitoring locations have been identified.

(b) If you are a subpart H system serving >3,300 people, you must submit a copy of your monitoring plan to the State prior to the date you conduct your initial monitoring under this subpart, unless your IDSE report submitted under subpart U of this part contains all the information required by this section.

(c) You may revise your monitoring plan to reflect changes in treatment, distribution system operations and layout (including new service areas), or other factors that may affect TTHM or HAA5 formation, or for State-approved reasons, after consultation with the State regarding the need for changes and the appropriateness of changes. If you change monitoring locations, you must replace existing compliance monitoring locations with the lowest LRAA with new locations that reflect the current distribution system locations with expected high TTHM or HAA5 levels. The State may also require modifications in your monitoring plan. If you are a subpart H system serving >3,300 people, you must submit a copy of your modified monitoring plan to the State prior to the date you are required to comply with the revised monitoring plan.

§ 141.623 Reduced monitoring.

(a) You may reduce monitoring to the level specified in the table in this paragraph (a) any time the LRAA is ≤0.040 mg/L for TTHM and ≤0.030 mg/L for HAA5 at all monitoring locations. You may only use data collected under the provisions of this subpart or subpart L of this part to qualify for reduced monitoring. In addition, the source water annual average TOC level, before any treatment, must be ≤4.0 mg/L at each treatment plant treating surface water or ground water under the direct influence of surface water, based on monitoring conducted under either § 141.132(b)(1)(iii) or § 141.132(d).

Source water type	Population size category	Monitoring frequency [1]	Distribution system monitoring location per monitoring period
Subpart H:			
	<500	.....	monitoring may not be reduced.
	500–3,300	per year	1 TTHM and 1 HAA5 sample: one at the location and during the quarter with the highest TTHM single measurement, one at the location and during the quarter with the highest HAA5 single measurement; 1 dual sample set per year if the highest TTHM and HAA5 measurements occurred at the same location and quarter.
	3,301–9,999	per year	2 dual sample sets: one at the location and during the quarter with the highest TTHM single measurement, one at the location and during the quarter with the highest HAA5 single measurement.
	10,000–49,999	per quarter	2 dual sample sets at the locations with the highest TTHM and highest HAA5 LRAAs.
	50,000–249,999	per quarter	4 dual sample sets—at the locations with the two highest TTHM and two highest HAA5 LRAAs.
	250,000–999,999	per quarter	6 dual sample sets—at the locations with the three highest TTHM and three highest HAA5 LRAAs.

Source water type	Population size category	Monitoring frequency [1]	Distribution system monitoring location per monitoring period
	1,000,000–4,999,999	per quarter	8 dual sample sets—at the locations with the four highest TTHM and four highest HAA5 LRAAs.
	≥5,000,000	per quarter	10 dual sample sets—at the locations with the five highest TTHM and five highest HAA5 LRAAs.
Ground Water:			
	<500	every third year	1 TTHM and 1 HAA5 sample: one at the location and during the quarter with the highest TTHM single measurement, one at the location and during the quarter with the highest HAA5 single measurement; 1 dual sample set per year if the highest TTHM and HAA5 measurements occurred at the same location and quarter.
	500–9,999	per year	1 TTHM and 1 HAA5 sample: one at the location and during the quarter with the highest TTHM single measurement, one at the location and during the quarter with the highest HAA5 single measurement; 1 dual sample set per year if the highest TTHM and HAA5 measurements occurred at the same location and quarter.
	10,000–99,999	per year	2 dual sample sets: one at the location and during the quarter with the highest TTHM single measurement, one at the location and during the quarter with the highest HAA5 single measurement.
	100,000–499,999	per quarter	2 dual sample sets; at the locations with the highest TTHM and highest HAA5 LRAAs.
	≥500,000	per quarter	4 dual sample sets at the locations with the two highest TTHM and two highest HAA5 LRAAs.

[1] Systems on quarterly monitoring must take dual sample sets every 90 days.

(b) You may remain on reduced monitoring as long as the TTHM LRAA ≤0.040 mg/L and the HAA5 LRAA ≤0.030 mg/L at each monitoring location (for systems with quarterly reduced monitoring) or each TTHM sample ≤0.060 mg/L and each HAA5 sample ≤0.045 mg/L (for systems with annual or less frequent monitoring). In addition, the source water annual average TOC level, before any treatment, must be ≤4.0 mg/L at each treatment plant treating surface water or ground water under the direct influence of surface water, based on monitoring conducted under either §141.132(b)(1)(iii) or §141.132(d).

(c) If the LRAA based on quarterly monitoring at any monitoring location exceeds either 0.040 mg/L for TTHM or 0.030 mg/L for HAA5 or if the annual (or less frequent) sample at any location exceeds either 0.060 mg/L for TTHM or 0.045 mg/L for HAA5, or if the source water annual average TOC level, before any treatment, >4.0 mg/L at any treatment plant treating surface water or ground water under the direct influence of surface water, you must resume routine monitoring under §141.621 or begin increased monitoring if §141.625 applies.

(d) The State may return your system to routine monitoring at the State's discretion.

§141.624 Additional requirements for consecutive systems.

If you are a consecutive system that does not add a disinfectant but delivers water that has been treated with a primary or residual disinfectant other than ultraviolet light, you must comply with analytical and monitoring requirements for chlorine and chloramines in §141.131 (c) and §141.132(c)(1) and the compliance requirements in §141.133(c)(1) beginning April 1, 2009, unless required earlier by the State, and report monitoring results under §141.134(c).

§141.625 Conditions requiring increased monitoring.

(a) If you are required to monitor at a particular location annually or less frequently than annually under §141.621

or §141.623, you must increase monitoring to dual sample sets once per quarter (taken every 90 days) at all locations if a TTHM sample is >0.080 mg/L or a HAA5 sample is >0.060 mg/L at any location.

(b) You are in violation of the MCL when the LRAA exceeds the subpart V MCLs in §141.64(b)(2), calculated based on four consecutive quarters of monitoring (or the LRAA calculated based on fewer than four quarters of data if the MCL would be exceeded regardless of the monitoring results of subsequent quarters). You are in violation of the monitoring requirements for each quarter that a monitoring result would be used in calculating an LRAA if you fail to monitor.

(c) You may return to routine monitoring once you have conducted increased monitoring for at least four consecutive quarters and the LRAA for every monitoring location is ≤0.060 mg/L for TTHM and ≤0.045 mg/L for HAA5.

§141.626 Operational evaluation levels.

(a) You have exceeded the operational evaluation level at any monitoring location where the sum of the two previous quarters' TTHM results plus twice the current quarter's TTHM result, divided by 4 to determine an average, exceeds 0.080 mg/L, or where the sum of the two previous quarters' HAA5 results plus twice the current quarter's HAA5 result, divided by 4 to determine an average, exceeds 0.060 mg/L.

(b)(1) If you exceed the operational evaluation level, you must conduct an operational evaluation and submit a written report of the evaluation to the State no later than 90 days after being notified of the analytical result that causes you to exceed the operational evaluation level. The written report must be made available to the public upon request.

(2) Your operational evaluation must include an examination of system treatment and distribution operational practices, including storage tank operations, excess storage capacity, distribution system flushing, changes in sources or source water quality, and treatment changes or problems that may contribute to TTHM and HAA5 formation and what steps could be considered to minimize future exceedences.

(i) You may request and the State may allow you to limit the scope of your evaluation if you are able to identify the cause of the operational evaluation level exceedance.

(ii) Your request to limit the scope of the evaluation does not extend the schedule in paragraph (b)(1) of this section for submitting the written report. The State must approve this limited scope of evaluation in writing and you must keep that approval with the completed report.

§141.627 Requirements for remaining on reduced TTHM and HAA5 monitoring based on subpart L results.

You may remain on reduced monitoring after the dates identified in §141.620(c) for compliance with this subpart only if you qualify for a 40/30 certification under §141.603 or have received a very small system waiver under §141.604, plus you meet the reduced monitoring criteria in §141.623(a), and you do not change or add monitoring locations from those used for compliance monitoring under subpart L of this part. If your monitoring locations under this subpart differ from your monitoring locations under subpart L of this part, you may not remain on reduced monitoring after the dates identified in §141.620(c) for compliance with this subpart.

§141.628 Requirements for remaining on increased TTHM and HAA5 monitoring based on subpart L results.

If you were on increased monitoring under §141.132(b)(1), you must remain on increased monitoring until you qualify for a return to routine monitoring under §141.625(c). You must conduct increased monitoring under §141.625 at the monitoring locations in the monitoring plan developed under §141.622 beginning at the date identified in §141.620(c) for compliance with this subpart and remain on increased monitoring until you qualify for a return to routine monitoring under §141.625(c).

§ 141.629 Reporting and recordkeeping requirements.

(a) *Reporting*. (1) You must report the following information for each monitoring location to the State within 10 days of the end of any quarter in which monitoring is required:

(i) Number of samples taken during the last quarter.

(ii) Date and results of each sample taken during the last quarter.

(iii) Arithmetic average of quarterly results for the last four quarters for each monitoring location (LRAA), beginning at the end of the fourth calendar quarter that follows the compliance date and at the end of each subsequent quarter. If the LRAA calculated based on fewer than four quarters of data would cause the MCL to be exceeded regardless of the monitoring results of subsequent quarters, you must report this information to the State as part of the first report due following the compliance date or anytime thereafter that this determination is made. If you are required to conduct monitoring at a frequency that is less than quarterly, you must make compliance calculations beginning with the first compliance sample taken after the compliance date, unless you are required to conduct increased monitoring under § 141.625.

(iv) Whether, based on § 141.64(b)(2) and this subpart, the MCL was violated at any monitoring location.

(v) Any operational evaluation levels that were exceeded during the quarter and, if so, the location and date, and the calculated TTHM and HAA5 levels.

(2) If you are a subpart H system seeking to qualify for or remain on reduced TTHM/HAA5 monitoring, you must report the following source water TOC information for each treatment plant that treats surface water or ground water under the direct influence of surface water to the State within 10 days of the end of any quarter in which monitoring is required:

(i) The number of source water TOC samples taken each month during last quarter.

(ii) The date and result of each sample taken during last quarter.

(iii) The quarterly average of monthly samples taken during last quarter or the result of the quarterly sample.

(iv) The running annual average (RAA) of quarterly averages from the past four quarters.

(v) Whether the RAA exceeded 4.0 mg/L.

(3) The State may choose to perform calculations and determine whether the MCL was exceeded or the system is eligible for reduced monitoring in lieu of having the system report that information

(b) *Recordkeeping*. You must retain any subpart V monitoring plans and your subpart V monitoring results as required by § 141.33.

Subpart W—Enhanced Treatment for *Cryptosporidium*

SOURCE: 71 FR 769, Jan. 5, 2006, unless otherwise noted.

GENERAL REQUIREMENTS

§ 141.700 General requirements.

(a) The requirements of this subpart W are national primary drinking water regulations. The regulations in this subpart establish or extend treatment technique requirements in lieu of maximum contaminant levels for *Cryptosporidium*. These requirements are in addition to requirements for filtration and disinfection in subparts H, P, and T of this part.

(b) *Applicability*. The requirements of this subpart apply to all subpart H systems, which are public water systems supplied by a surface water source and public water systems supplied by a ground water source under the direct influence of surface water.

(1) Wholesale systems, as defined in § 141.2, must comply with the requirements of this subpart based on the population of the largest system in the combined distribution system.

(2) The requirements of this subpart for filtered systems apply to systems required by National Primary Drinking Water Regulations to provide filtration treatment, whether or not the system is currently operating a filtration system.

(3) The requirements of this subpart for unfiltered systems apply only to unfiltered systems that timely met and

continue to meet the filtration avoidance criteria in subparts H, P, and T of this part, as applicable.

(c) *Requirements*. Systems subject to this subpart must comply with the following requirements:

(1) Systems must conduct an initial and a second round of source water monitoring for each plant that treats a surface water or GWUDI source. This monitoring may include sampling for *Cryptosporidium*, *E. coli*, and turbidity as described in §§141.701 through 141.706, to determine what level, if any, of additional *Cryptosporidium* treatment they must provide.

(2) Systems that plan to make a significant change to their disinfection practice must develop disinfection profiles and calculate disinfection benchmarks, as described in §§141.708 through 141.709.

(3) Filtered systems must determine their *Cryptosporidium* treatment bin classification as described in §141.710 and provide additional treatment for *Cryptosporidium*, if required, as described in §141.711. All unfiltered systems must provide treatment for *Cryptosporidium* as described in §141.712. Filtered and unfiltered systems must implement *Cryptosporidium* treatment according to the schedule in §141.713.

(4) Systems with uncovered finished water storage facilities must comply with the requirements to cover the facility or treat the discharge from the facility as described in §141.714.

(5) Systems required to provide additional treatment for *Cryptosporidium* must implement microbial toolbox options that are designed and operated as described in §§141.715 through 141.720.

(6) Systems must comply with the applicable recordkeeping and reporting requirements described in §§141.721 through 141.722.

(7) Systems must address significant deficiencies identified in sanitary surveys performed by EPA as described in §141.723.

SOURCE WATER MONITORING REQUIREMENTS

§ 141.701 Source water monitoring.

(a) *Initial round of source water monitoring*. Systems must conduct the following monitoring on the schedule in paragraph (c) of this section unless they meet the monitoring exemption criteria in paragraph (d) of this section.

(1) Filtered systems serving at least 10,000 people must sample their source water for *Cryptosporidium*, *E. coli*, and turbidity at least monthly for 24 months.

(2) Unfiltered systems serving at least 10,000 people must sample their source water for *Cryptosporidium* at least monthly for 24 months.

(3)(i) Filtered systems serving fewer than 10,000 people must sample their source water for *E. coli* at least once every two weeks for 12 months.

(ii) A filtered system serving fewer than 10,000 people may avoid *E. coli* monitoring if the system notifies the State that it will monitor for *Cryptosporidium* as described in paragraph (a)(4) of this section. The system must notify the State no later than 3 months prior to the date the system is otherwise required to start *E. coli* monitoring under §141.701(c).

(4) Filtered systems serving fewer than 10,000 people must sample their source water for *Cryptosporidium* at least twice per month for 12 months or at least monthly for 24 months if they meet one of the following, based on monitoring conducted under paragraph (a)(3) of this section:

(i) For systems using lake/reservoir sources, the annual mean *E. coli* concentration is greater than 10 *E. coli*/100 mL.

(ii) For systems using flowing stream sources, the annual mean *E. coli* concentration is greater than 50 *E. coli*/100 mL.

(iii) The system does not conduct *E. coli* monitoring as described in paragraph (a)(3) of this section.

(iv) Systems using ground water under the direct influence of surface water (GWUDI) must comply with the requirements of paragraph (a)(4) of this section based on the *E. coli* level that applies to the nearest surface water body. If no surface water body is nearby, the system must comply based on the requirements that apply to systems using lake/reservoir sources.

(5) For filtered systems serving fewer than 10,000 people, the State may approve monitoring for an indicator

other than *E. coli* under paragraph (a)(3) of this section. The State also may approve an alternative to the *E. coli* concentration in paragraph (a)(4)(i), (ii) or (iv) of this section to trigger *Cryptosporidium* monitoring. This approval by the State must be provided to the system in writing and must include the basis for the State's determination that the alternative indicator and/or trigger level will provide a more accurate identification of whether a system will exceed the Bin 1 *Cryptosporidium* level in § 141.710.

(6) Unfiltered systems serving fewer than 10,000 people must sample their source water for *Cryptosporidium* at least twice per month for 12 months or at least monthly for 24 months.

(7) Systems may sample more frequently than required under this section if the sampling frequency is evenly spaced throughout the monitoring period.

(b) *Second round of source water monitoring*. Systems must conduct a second round of source water monitoring that meets the requirements for monitoring parameters, frequency, and duration described in paragraph (a) of this section, unless they meet the monitoring exemption criteria in paragraph (d) of this section. Systems must conduct this monitoring on the schedule in paragraph (c) of this section.

(c) *Monitoring schedule*. Systems must begin the monitoring required in paragraphs (a) and (b) of this section no later than the month beginning with the date listed in this table:

SOURCE WATER MONITORING STARTING DATES TABLE

Systems that serve . . .	Must begin the first round of source water monitoring no later than the month beginning . . .	And must begin the second round of source water monitoring no later than the month beginning . . .
(1) At least 100,000 people	(i) October 1, 2006	(ii) April 1, 2015.
(2) From 50,000 to 99,999 people	(i) April 1, 2007	(ii) October 1, 2015.
(3) From 10,000 to 49,999 people	(i) April 1, 2008	(ii) October 1, 2016.
(4) Fewer than 10,000 and monitor for *E. coli*[a].	(i) October 1, 2008	(ii) October 1, 2017.
(5) Fewer than 10,000 and monitor for *Cryptosporidium*[b].	(i) April 1, 2010	(ii) April 1, 2019.

[a] Applies only to filtered systems.
[b] Applies to filtered systems that meet the conditions of paragraph (a)(4) of this section and unfiltered systems.

(d) *Monitoring avoidance*. (1) Filtered systems are not required to conduct source water monitoring under this subpart if the system will provide a total of at least 5.5-log of treatment for *Cryptosporidium*, equivalent to meeting the treatment requirements of Bin 4 in § 141.711.

(2) Unfiltered systems are not required to conduct source water monitoring under this subpart if the system will provide a total of at least 3-log *Cryptosporidium* inactivation, equivalent to meeting the treatment requirements for unfiltered systems with a mean *Cryptosporidium* concentration of greater than 0.01 oocysts/L in § 141.712.

(3) If a system chooses to provide the level of treatment in paragraph (d)(1) or (2) of this section, as applicable, rather than start source water monitoring, the system must notify the State in writing no later than the date the system is otherwise required to submit a sampling schedule for monitoring under § 141.702. Alternatively, a system may choose to stop sampling at any point after it has initiated monitoring if it notifies the State in writing that it will provide this level of treatment. Systems must install and operate technologies to provide this level of treatment by the applicable treatment compliance date in § 141.713.

(e) *Plants operating only part of the year*. Systems with subpart H plants that operate for only part of the year must conduct source water monitoring in accordance with this subpart, but with the following modifications:

(1) Systems must sample their source water only during the months that the plant operates unless the State specifies another monitoring period based on plant operating practices.

(2) Systems with plants that operate less than six months per year and that

monitor for *Cryptosporidium* must collect at least six *Cryptosporidium* samples per year during each of two years of monitoring. Samples must be evenly spaced throughout the period the plant operates.

(f)(1) *New sources.* A system that begins using a new source of surface water or GWUDI after the system is required to begin monitoring under paragraph (c) of this section must monitor the new source on a schedule the State approves. Source water monitoring must meet the requirements of this subpart. The system must also meet the bin classification and *Cryptosporidium* treatment requirements of §§141.710 and 141.711 or §141.712, as applicable, for the new source on a schedule the State approves.

(2) The requirements of §141.701(f) apply to subpart H systems that begin operation after the monitoring start date applicable to the system's size under paragraph (c) of this section.

(3) The system must begin a second round of source water monitoring no later than 6 years following initial bin classification under §141.710 or determination of the mean *Cryptosporidium* level under §141.712, as applicable.

(g) Failure to collect any source water sample required under this section in accordance with the sampling schedule, sampling location, analytical method, approved laboratory, and reporting requirements of §§141.702 through 141.706 is a monitoring violation.

(h) *Grandfathering monitoring data.* Systems may use (grandfather) monitoring data collected prior to the applicable monitoring start date in paragraph (c) of this section to meet the initial source water monitoring requirements in paragraph (a) of this section. Grandfathered data may substitute for an equivalent number of months at the end of the monitoring period. All data submitted under this paragraph must meet the requirements in §141.707.

§141.702 Sampling schedules.

(a) Systems required to conduct source water monitoring under §141.701 must submit a sampling schedule that specifies the calendar dates when the system will collect each required sample.

(1) Systems must submit sampling schedules no later than 3 months prior to the applicable date listed in §141.701(c) for each round of required monitoring.

(2)(i) Systems serving at least 10,000 people must submit their sampling schedule for the initial round of source water monitoring under §141.701(a) to EPA electronically at *https://intranet.epa.gov/lt2/.*

(ii) If a system is unable to submit the sampling schedule electronically, the system may use an alternative approach for submitting the sampling schedule that EPA approves.

(3) Systems serving fewer than 10,000 people must submit their sampling schedules for the initial round of source water monitoring §141.701(a) to the State.

(4) Systems must submit sampling schedules for the second round of source water monitoring §141.701(b) to the State.

(5) If EPA or the State does not respond to a system regarding its sampling schedule, the system must sample at the reported schedule.

(b) Systems must collect samples within two days before or two days after the dates indicated in their sampling schedule (*i.e.*, within a five-day period around the schedule date) unless one of the conditions of paragraph (b)(1) or (2) of this section applies.

(1) If an extreme condition or situation exists that may pose danger to the sample collector, or that cannot be avoided and causes the system to be unable to sample in the scheduled five-day period, the system must sample as close to the scheduled date as is feasible unless the State approves an alternative sampling date. The system must submit an explanation for the delayed sampling date to the State concurrent with the shipment of the sample to the laboratory.

(2)(i) If a system is unable to report a valid analytical result for a scheduled sampling date due to equipment failure, loss of or damage to the sample, failure to comply with the analytical method requirements, including the quality control requirements in §141.704, or the failure of an approved

laboratory to analyze the sample, then the system must collect a replacement sample.

(ii) The system must collect the replacement sample not later than 21 days after receiving information that an analytical result cannot be reported for the scheduled date unless the system demonstrates that collecting a replacement sample within this time frame is not feasible or the State approves an alternative resampling date. The system must submit an explanation for the delayed sampling date to the State concurrent with the shipment of the sample to the laboratory.

(c) Systems that fail to meet the criteria of paragraph (b) of this section for any source water sample required under § 141.701 must revise their sampling schedules to add dates for collecting all missed samples. Systems must submit the revised schedule to the State for approval prior to when the system begins collecting the missed samples.

§ 141.703 Sampling locations.

(a) Systems required to conduct source water monitoring under § 141.701 must collect samples for each plant that treats a surface water or GWUDI source. Where multiple plants draw water from the same influent, such as the same pipe or intake, the State may approve one set of monitoring results to be used to satisfy the requirements of § 141.701 for all plants.

(b)(1) Systems must collect source water samples prior to chemical treatment, such as coagulants, oxidants and disinfectants, unless the system meets the condition of paragraph (b)(2) of this section.

(2) The State may approve a system to collect a source water sample after chemical treatment. To grant this approval, the State must determine that collecting a sample prior to chemical treatment is not feasible for the system and that the chemical treatment is unlikely to have a significant adverse effect on the analysis of the sample.

(c) Systems that recycle filter backwash water must collect source water samples prior to the point of filter backwash water addition.

(d) *Bank filtration.* (1) Systems that receive *Cryptosporidium* treatment credit for bank filtration under § 141.173(b) or § 141.552(a), as applicable, must collect source water samples in the surface water prior to bank filtration.

(2) Systems that use bank filtration as pretreatment to a filtration plant must collect source water samples from the well (*i.e.*, after bank filtration). Use of bank filtration during monitoring must be consistent with routine operational practice. Systems collecting samples after a bank filtration process may not receive treatment credit for the bank filtration under § 141.717(c).

(e) *Multiple sources.* Systems with plants that use multiple water sources, including multiple surface water sources and blended surface water and ground water sources, must collect samples as specified in paragraph (e)(1) or (2) of this section. The use of multiple sources during monitoring must be consistent with routine operational practice.

(1) If a sampling tap is available where the sources are combined prior to treatment, systems must collect samples from the tap.

(2) If a sampling tap where the sources are combined prior to treatment is not available, systems must collect samples at each source near the intake on the same day and must follow either paragraph (e)(2)(i) or (ii) of this section for sample analysis.

(i) Systems may composite samples from each source into one sample prior to analysis. The volume of sample from each source must be weighted according to the proportion of the source in the total plant flow at the time the sample is collected.

(ii) Systems may analyze samples from each source separately and calculate a weighted average of the analysis results for each sampling date. The weighted average must be calculated by multiplying the analysis result for each source by the fraction the source contributed to total plant flow at the time the sample was collected and then summing these values.

(f) *Additional Requirements.* Systems must submit a description of their sampling location(s) to the State at

the same time as the sampling schedule required under § 141.702. This description must address the position of the sampling location in relation to the system's water source(s) and treatment processes, including pretreatment, points of chemical treatment, and filter backwash recycle. If the State does not respond to a system regarding sampling location(s), the system must sample at the reported location(s).

§ 141.704 Analytical methods.

(a) *Cryptosporidium.* Systems must analyze for *Cryptosporidium* using *Method 1623: Cryptosporidium and Giardia in Water by Filtration/IMS/FA*, 2005, United States Environmental Protection Agency, EPA–815–R–05–002 or *Method 1622: Cryptosporidium in Water by Filtration/IMS/FA*, 2005, United States Environmental Protection Agency, EPA–815–R–05–001, which are incorporated by reference, or alternative methods listed in appendix A to subpart C of this part. The Director of the Federal Register approves this incorporation by reference in accordance with 5 U.S.C. 552(a) and 1 CFR part 51. You may obtain a copy of these methods online from *http://www.epa.gov/safewater/disinfection/lt2* or from the United States Environmental Protection Agency, Office of Ground Water and Drinking Water, 1201 Constitution Ave., NW., Washington, DC 20460 (*Telephone:* 800–426–4791). You may inspect a copy at the Water Docket in the EPA Docket Center, 1301 Constitution Ave., NW., Washington, DC (*Telephone:* 202–566–2426) or at the National Archives and Records Administration (NARA). For information on the availability of this material at NARA, call 202–741–6030, or go to: *http://www.archives.gov/federal_register/code_of_federal_regulations/ibr_locations.html*.

(1) Systems must analyze at least a 10 L sample or a packed pellet volume of at least 2 mL as generated by the methods listed in paragraph (a) of this section. Systems unable to process a 10 L sample must analyze as much sample volume as can be filtered by two filters approved by EPA for the methods listed in paragraph (a) of this section, up to a packed pellet volume of at least 2 mL.

(2)(i) Matrix spike (MS) samples, as required by the methods in paragraph (a) of this section, must be spiked and filtered by a laboratory approved for *Cryptosporidium* analysis under § 141.705.

(ii) If the volume of the MS sample is greater than 10 L, the system may filter all but 10 L of the MS sample in the field, and ship the filtered sample and the remaining 10 L of source water to the laboratory. In this case, the laboratory must spike the remaining 10 L of water and filter it through the filter used to collect the balance of the sample in the field.

(3) Flow cytometer-counted spiking suspensions must be used for MS samples and ongoing precision and recovery (OPR) samples.

(b) *E. coli.* System must use methods for enumeration of E. coli in source water approved in § 136.3(a) of this chapter or alternative methods listed in appendix A to subpart C of this part.

(1) The time from sample collection to initiation of analysis may not exceed 30 hours unless the system meets the condition of paragraph (b)(2) of this section.

(2) The State may approve on a case-by-case basis the holding of an *E. coli* sample for up to 48 hours between sample collection and initiation of analysis if the State determines that analyzing an *E. coli* sample within 30 hours is not feasible. *E. coli* samples held between 30 to 48 hours must be analyzed by the Colilert reagent version of Standard Method 9223B as listed in § 136.3(a) of this title.

(3) Systems must maintain samples between 0 °C and 10 °C during storage and transit to the laboratory.

(c) *Turbidity.* Systems must use methods for turbidity measurement approved in § 141.74(a)(1).

[71 FR 769, Jan. 5, 2006, as amended at 74 FR 30959, June 29, 2009]

§ 141.705 Approved laboratories.

(a) *Cryptosporidium.* Systems must have *Cryptosporidium* samples analyzed by a laboratory that is approved under EPA's Laboratory Quality Assurance Evaluation Program for Analysis of *Cryptosporidium* in Water or a laboratory that has been certified for

Cryptosporidium analysis by an equivalent State laboratory certification program.

(b) *E. coli*. Any laboratory certified by the EPA, the National Environmental Laboratory Accreditation Conference or the State for total coliform or fecal coliform analysis under § 141.74 is approved for *E. coli* analysis under this subpart when the laboratory uses the same technique for *E. coli* that the laboratory uses for § 141.74.

(c) *Turbidity*. Measurements of turbidity must be made by a party approved by the State.

§ 141.706 Reporting source water monitoring results.

(a) Systems must report results from the source water monitoring required under § 141.701 no later than 10 days after the end of the first month following the month when the sample is collected.

(b)(1) All systems serving at least 10,000 people must report the results from the initial source water monitoring required under § 141.701(a) to EPA electronically at *https://intranet.epa.gov/lt2/*.

(2) If a system is unable to report monitoring results electronically, the system may use an alternative approach for reporting monitoring results that EPA approves.

(c) Systems serving fewer than 10,000 people must report results from the initial source water monitoring required under § 141.701(a) to the State.

(d) All systems must report results from the second round of source water monitoring required under § 141.701(b) to the State.

(e) Systems must report the applicable information in paragraphs (e)(1) and (2) of this section for the source water monitoring required under § 141.701.

(1) Systems must report the following data elements for each *Cryptosporidium* analysis:

1. PWS ID.
2. Facility ID.
3. Sample collection date.
4. Sample type (field or matrix spike).
5. Sample volume filtered (L), to nearest ¼ L.
6. Was 100% of filtered volume examined.
7. Number of oocysts counted.

(i) For matrix spike samples, systems must also report the sample volume spiked and estimated number of oocysts spiked. These data are not required for field samples.

(ii) For samples in which less than 10 L is filtered or less than 100% of the sample volume is examined, systems must also report the number of filters used and the packed pellet volume.

(iii) For samples in which less than 100% of sample volume is examined, systems must also report the volume of resuspended concentrate and volume of this resuspension processed through immunomagnetic separation.

(2) Systems must report the following data elements for each *E. coli* analysis:

Data element.

1. PWS ID.
2. Facility ID.
3. Sample collection date.
4. Analytical method number.
5. Method type.
6. Source type (flowing stream, lake/reservoir, GWUDI).
7. *E. coli*/100 mL.
8. Turbidity.[1]

[1] Systems serving fewer than 10,000 people that are not required to monitor for turbidity under § 141.701 are not required to report turbidity with their *E. coli* results.

§ 141.707 Grandfathering previously collected data.

(a)(1) Systems may comply with the initial source water monitoring requirements of § 141.701(a) by grandfathering sample results collected before the system is required to begin monitoring (*i.e.*, previously collected data). To be grandfathered, the sample results and analysis must meet the criteria in this section and the State must approve.

(2) A filtered system may grandfather *Cryptosporidium* samples to meet the requirements of § 141.701(a) when the system does not have corresponding *E. coli* and turbidity samples. A system that grandfathers *Cryptosporidium* samples without *E. coli* and turbidity samples is not required to collect *E. coli* and turbidity samples when the system completes the requirements for *Cryptosporidium* monitoring under § 141.701(a).

(b) *E. coli sample analysis*. The analysis of *E. coli* samples must meet the analytical method and approved laboratory requirements of §§ 141.704 through 141.705.

(c) *Cryptosporidium sample analysis.* The analysis of *Cryptosporidium* samples must meet the criteria in this paragraph.

(1) Laboratories analyzed *Cryptosporidium* samples using one of the analytical methods in paragraphs (c)(1)(i) through (vi) of this section, which are incorporated by reference. The Director of the Federal Register approves this incorporation by reference in accordance with 5 U.S.C. 552(a) and 1 CFR part 51. You may obtain a copy of these methods on-line from the United States Environmental Protection Agency, Office of Ground Water and Drinking Water, 1201 Constitution Ave, NW, Washington, DC 20460 (Telephone: 800–426–4791). You may inspect a copy at the Water Docket in the EPA Docket Center, 1301 Constitution Ave., NW, Washington, DC, (Telephone: 202–566–2426) or at the National Archives and Records Administration (NARA). For information on the availability of this material at NARA, call 202–741–6030, or go to: *http://www.archives.gov/federal_register/code_of_federal_regulations/ibr_locations.html.*

(i) *Method 1623: Cryptosporidium and Giardia in Water by Filtration/IMS/FA,* 2005, United States Environmental Protection Agency, EPA–815–R–05–002.

(ii) *Method 1622: Cryptosporidium in Water by Filtration/IMS/FA*, 2005, United States Environmental Protection Agency, EPA–815–R–05–001.

(iii) *Method 1623: Cryptosporidium and Giardia in Water by Filtration/IMS/FA,* 2001, United States Environmental Protection Agency, EPA–821–R–01–025.

(iv) *Method 1622: Cryptosporidium in Water by Filtration/IMS/FA*, 2001, United States Environmental Protection Agency, EPA–821–-R–01–026.

(v) *Method 1623: Cryptosporidium and Giardia in Water by Filtration/IMS/FA,* 1999, United States Environmental Protection Agency, EPA–821–R–99–006.

(vi) *Method 1622: Cryptosporidium in Water by Filtration/IMS/FA*, 1999, United States Environmental Protection Agency, EPA–821–R–99–001.

(2) For each *Cryptosporidium* sample, the laboratory analyzed at least 10 L of sample or at least 2 mL of packed pellet or as much volume as could be filtered by 2 filters that EPA approved for the methods listed in paragraph (c)(1) of this section.

(d) *Sampling location.* The sampling location must meet the conditions in §141.703.

(e) *Sampling frequency. Cryptosporidium* samples were collected no less frequently than each calendar month on a regular schedule, beginning no earlier than January 1999. Sample collection intervals may vary for the conditions specified in §141.702(b)(1) and (2) if the system provides documentation of the condition when reporting monitoring results.

(1) The State may approve grandfathering of previously collected data where there are time gaps in the sampling frequency if the system conducts additional monitoring the State specifies to ensure that the data used to comply with the initial source water monitoring requirements of §141.701(a) are seasonally representative and unbiased.

(2) Systems may grandfather previously collected data where the sampling frequency within each month varied. If the *Cryptosporidium* sampling frequency varied, systems must follow the monthly averaging procedure in §141.710(b)(5) or §141.712(a)(3), as applicable, when calculating the bin classification for filtered systems or the mean *Cryptosporidium* concentration for unfiltered systems.

(f) *Reporting monitoring results for grandfathering.* Systems that request to grandfather previously collected monitoring results must report the following information by the applicable dates listed in this paragraph. Systems serving at least 10,000 people must report this information to EPA unless the State approves reporting to the State rather than EPA. Systems serving fewer than 10,000 people must report this information to the State.

(1) Systems must report that they intend to submit previously collected monitoring results for grandfathering. This report must specify the number of previously collected results the system will submit, the dates of the first and last sample, and whether a system will conduct additional source water monitoring to meet the requirements of §141.701(a). Systems must report this information no later than the date the

sampling schedule under § 141.702 is required.

(2) Systems must report previously collected monitoring results for grandfathering, along with the associated documentation listed in paragraphs (f)(2)(i) through (iv) of this section, no later than two months after the applicable date listed in § 141.701(c).

(i) For each sample result, systems must report the applicable data elements in § 141.706.

(ii) Systems must certify that the reported monitoring results include all results the system generated during the time period beginning with the first reported result and ending with the final reported result. This applies to samples that were collected from the sampling location specified for source water monitoring under this subpart, not spiked, and analyzed using the laboratory's routine process for the analytical methods listed in this section.

(iii) Systems must certify that the samples were representative of a plant's source water(s) and the source water(s) have not changed. Systems must report a description of the sampling location(s), which must address the position of the sampling location in relation to the system's water source(s) and treatment processes, including points of chemical addition and filter backwash recycle.

(iv) For *Cryptosporidium* samples, the laboratory or laboratories that analyzed the samples must provide a letter certifying that the quality control criteria specified in the methods listed in paragraph (c)(1) of this section were met for each sample batch associated with the reported results. Alternatively, the laboratory may provide bench sheets and sample examination report forms for each field, matrix spike, IPR, OPR, and method blank sample associated with the reported results.

(g) If the State determines that a previously collected data set submitted for grandfathering was generated during source water conditions that were not normal for the system, such as a drought, the State may disapprove the data. Alternatively, the State may approve the previously collected data if the system reports additional source water monitoring data, as determined by the State, to ensure that the data set used under § 141.710 or § 141.712 represents average source water conditions for the system.

(h) If a system submits previously collected data that fully meet the number of samples required for initial source water monitoring under § 141.701(a) and some of the data are rejected due to not meeting the requirements of this section, systems must conduct additional monitoring to replace rejected data on a schedule the State approves. Systems are not required to begin this additional monitoring until two months after notification that data have been rejected and additional monitoring is necessary.

DISINFECTION PROFILING AND BENCHMARKING REQUIREMENTS

§ 141.708 Requirements when making a significant change in disinfection practice.

(a) Following the completion of initial source water monitoring under § 141.701(a), a system that plans to make a significant change to its disinfection practice, as defined in paragraph (b) of this section, must develop disinfection profiles and calculate disinfection benchmarks for *Giardia lamblia* and viruses as described in § 141.709. Prior to changing the disinfection practice, the system must notify the State and must include in this notice the information in paragraphs (a)(1) through (3) of this section.

(1) A completed disinfection profile and disinfection benchmark for *Giardia lamblia* and viruses as described in § 141.709.

(2) A description of the proposed change in disinfection practice.

(3) An analysis of how the proposed change will affect the current level of disinfection.

(b) Significant changes to disinfection practice are defined as follows:

(1) Changes to the point of disinfection;

(2) Changes to the disinfectant(s) used in the treatment plant;

(3) Changes to the disinfection process; or

(4) Any other modification identified by the State as a significant change to disinfection practice.

§ 141.709 Developing the disinfection profile and benchmark.

(a) Systems required to develop disinfection profiles under § 141.708 must follow the requirements of this section. Systems must monitor at least weekly for a period of 12 consecutive months to determine the total log inactivation for *Giardia lamblia* and viruses. If systems monitor more frequently, the monitoring frequency must be evenly spaced. Systems that operate for fewer than 12 months per year must monitor weekly during the period of operation. Systems must determine log inactivation for *Giardia lamblia* through the entire plant, based on $CT_{99.9}$ values in Tables 1.1 through 1.6, 2.1 and 3.1 of § 141.74(b) as applicable. Systems must determine log inactivation for viruses through the entire treatment plant based on a protocol approved by the State.

(b) Systems with a single point of disinfectant application prior to the entrance to the distribution system must conduct the monitoring in paragraphs (b)(1) through (4) of this section. Systems with more than one point of disinfectant application must conduct the monitoring in paragraphs (b)(1) through (4) of this section for each disinfection segment. Systems must monitor the parameters necessary to determine the total inactivation ratio, using analytical methods in § 141.74(a).

(1) For systems using a disinfectant other than UV, the temperature of the disinfected water must be measured at each residual disinfectant concentration sampling point during peak hourly flow or at an alternative location approved by the State.

(2) For systems using chlorine, the pH of the disinfected water must be measured at each chlorine residual disinfectant concentration sampling point during peak hourly flow or at an alternative location approved by the State.

(3) The disinfectant contact time(s) (t) must be determined during peak hourly flow.

(4) The residual disinfectant concentration(s) (C) of the water before or at the first customer and prior to each additional point of disinfectant application must be measured during peak hourly flow.

(c) In lieu of conducting new monitoring under paragraph (b) of this section, systems may elect to meet the requirements of paragraphs (c)(1) or (2) of this section.

(1) Systems that have at least one year of existing data that are substantially equivalent to data collected under the provisions of paragraph (b) of this section may use these data to develop disinfection profiles as specified in this section if the system has neither made a significant change to its treatment practice nor changed sources since the data were collected. Systems may develop disinfection profiles using up to three years of existing data.

(2) Systems may use disinfection profile(s) developed under § 141.172 or §§ 141.530 through 141.536 in lieu of developing a new profile if the system has neither made a significant change to its treatment practice nor changed sources since the profile was developed. Systems that have not developed a virus profile under § 141.172 or §§ 141.530 through 141.536 must develop a virus profile using the same monitoring data on which the *Giardia lamblia* profile is based.

(d) Systems must calculate the total inactivation ratio for *Giardia lamblia* as specified in paragraphs (d)(1) through (3) of this section.

(1) Systems using only one point of disinfectant application may determine the total inactivation ratio for the disinfection segment based on either of the methods in paragraph (d)(1)(i) or (ii) of this section.

(i) Determine one inactivation ratio ($CTcalc/CT_{99.9}$) before or at the first customer during peak hourly flow.

(ii) Determine successive $CTcalc/CT_{99.9}$ values, representing sequential inactivation ratios, between the point of disinfectant application and a point before or at the first customer during peak hourly flow. The system must calculate the total inactivation ratio by determining ($CTcalc/CT_{99.9}$) for each sequence and then adding the ($CTcalc/CT_{99.9}$) values together to determine (Σ ($CTcalc/CT_{99.9}$)).

(2) Systems using more than one point of disinfectant application before the first customer must determine the CT value of each disinfection segment

immediately prior to the next point of disinfectant application, or for the final segment, before or at the first customer, during peak hourly flow. The ($CTcalc/CT_{99.9}$) value of each segment and (Σ ($CTcalc/CT_{99.9}$)) must be calculated using the method in paragraph (d)(1)(ii) of this section.

(3) The system must determine the total logs of inactivation by multiplying the value calculated in paragraph (d)(1) or (d)(2) of this section by 3.0.

(4) Systems must calculate the log of inactivation for viruses using a protocol approved by the State.

(e) Systems must use the procedures specified in paragraphs (e)(1) and (2) of this section to calculate a disinfection benchmark.

(1) For each year of profiling data collected and calculated under paragraphs (a) through (d) of this section, systems must determine the lowest mean monthly level of both *Giardia lamblia* and virus inactivation. Systems must determine the mean *Giardia lamblia* and virus inactivation for each calendar month for each year of profiling data by dividing the sum of daily or weekly *Giardia lamblia* and virus log inactivation by the number of values calculated for that month.

(2) The disinfection benchmark is the lowest monthly mean value (for systems with one year of profiling data) or the mean of the lowest monthly mean values (for systems with more than one year of profiling data) of *Giardia lamblia* and virus log inactivation in each year of profiling data.

TREATMENT TECHNIQUE REQUIREMENTS

§ 141.710 Bin classification for filtered systems.

(a) Following completion of the initial round of source water monitoring required under § 141.701(a), filtered systems must calculate an initial *Cryptosporidium* bin concentration for each plant for which monitoring was required. Calculation of the bin concentration must use the *Cryptosporidium* results reported under § 141.701(a) and must follow the procedures in paragraphs (b)(1) through (5) of this section.

(b)(1) For systems that collect a total of at least 48 samples, the bin concentration is equal to the arithmetic mean of all sample concentrations.

(2) For systems that collect a total of at least 24 samples, but not more than 47 samples, the bin concentration is equal to the highest arithmetic mean of all sample concentrations in any 12 consecutive months during which *Cryptosporidium* samples were collected.

(3) For systems that serve fewer than 10,000 people and monitor for *Cryptosporidium* for only one year (*i.e.*, collect 24 samples in 12 months), the bin concentration is equal to the arithmetic mean of all sample concentrations.

(4) For systems with plants operating only part of the year that monitor fewer than 12 months per year under § 141.701(e), the bin concentration is equal to the highest arithmetic mean of all sample concentrations during any year of *Cryptosporidium* monitoring.

(5) If the monthly *Cryptosporidium* sampling frequency varies, systems must first calculate a monthly average for each month of monitoring. Systems must then use these monthly average concentrations, rather than individual sample concentrations, in the applicable calculation for bin classification in paragraphs (b)(1) through (4) of this section.

(c) Filtered systems must determine their initial bin classification from the following table and using the *Cryptosporidium* bin concentration calculated under paragraphs (a)–(b) of this section:

BIN CLASSIFICATION TABLE FOR FILTERED SYSTEMS

For systems that are:	With a *Cryptosporidium* bin concentration of . . .[1]	The bin classification is . . .
. . . required to monitor for *Cryptosporidium* under § 141.701.	*Cryptosporidium* <0.075 oocyst/L	Bin 1.
	0.075 oocysts/L ≤*Cryptosporidium* <1.0 oocysts/L.	Bin 2.

BIN CLASSIFICATION TABLE FOR FILTERED SYSTEMS—Continued

For systems that are:	With a *Cryptosporidium* bin concentration of . . .[1]	The bin classification is . . .
	1.0 oocysts/L ≤*Cryptosporidium* <3.0 oocysts/L.	Bin 3.
	Cryptosporidium ≥3.0 oocysts/L	Bin 4.
. . . serving fewer than 10,000 people and NOT required to monitor for *Cryptosporidium* under § 141.701(a)(4).	NA	Bin 1.

[1] Based on calculations in paragraph (a) or (d) of this section, as applicable.

(d) Following completion of the second round of source water monitoring required under § 141.701(b), filtered systems must recalculate their *Cryptosporidium* bin concentration using the *Cryptosporidium* results reported under § 141.701(b) and following the procedures in paragraphs (b)(1) through (4) of this section. Systems must then redetermine their bin classification using this bin concentration and the table in paragraph (c) of this section.

(e)(1) Filtered systems must report their initial bin classification under paragraph (c) of this section to the State for approval no later than 6 months after the system is required to complete initial source water monitoring based on the schedule in § 141.701(c).

(2) Systems must report their bin classification under paragraph (d) of this section to the State for approval no later than 6 months after the system is required to complete the second round of source water monitoring based on the schedule in § 141.701(c).

(3) The bin classification report to the State must include a summary of source water monitoring data and the calculation procedure used to determine bin classification.

(f) Failure to comply with the conditions of paragraph (e) of this section is a violation of the treatment technique requirement.

§ 141.711 Filtered system additional *Cryptosporidium* treatment requirements.

(a) Filtered systems must provide the level of additional treatment for *Cryptosporidium* specified in this paragraph based on their bin classification as determined under § 141.710 and according to the schedule in § 141.713.

If the system bin classification is . . .	And the system uses the following filtration treatment in full compliance with subparts H, P, and T of this part (as applicable), then the additional *Cryptosporidium* treatment requirements are . . .			
	Conventional filtration treatment (including softening)	Direct filtration	Slow sand or diatomaceous earth filtration	Alternative filtration technologies
Bin 1	No additional treatment	No additional treatment	No additional treatment	No additional treatment.
Bin 2	1-log treatment	1.5-log treatment	1-log treatment	([1])
Bin 3	2-log treatment	2.5-log treatment	2-log treatment	([2])
Bin 4	2.5-log treatment	3-log treatment	2.5-log treatment	([3])

[1] As determined by the State such that the total *Cryptosporidium* removal and inactivation is at least 4.0-log.
[2] As determined by the State such that the total *Cryptosporidium* removal and inactivation is at least 5.0-log.
[3] As determined by the State such that the total *Cryptosporidium* removal and inactivation is at least 5.5-log.

(b)(1) Filtered systems must use one or more of the treatment and management options listed in § 141.715, termed the microbial toolbox, to comply with the additional *Cryptosporidium* treatment required in paragraph (a) of this section.

(2) Systems classified in Bin 3 and Bin 4 must achieve at least 1-log of the additional *Cryptosporidium* treatment required under paragraph (a) of this section using either one or a combination of the following: bag filters, bank filtration, cartridge filters, chlorine dioxide, membranes, ozone, or UV, as described in §§ 141.716 through 141.720.

(c) Failure by a system in any month to achieve treatment credit by meeting criteria in §§ 141.716 through 141.720 for microbial toolbox options that is at

least equal to the level of treatment required in paragraph (a) of this section is a violation of the treatment technique requirement.

(d) If the State determines during a sanitary survey or an equivalent source water assessment that after a system completed the monitoring conducted under § 141.701(a) or § 141.701(b), significant changes occurred in the system's watershed that could lead to increased contamination of the source water by *Cryptosporidium*, the system must take actions specified by the State to address the contamination. These actions may include additional source water monitoring and/or implementing microbial toolbox options listed in § 141.715.

§ 141.712 Unfiltered system *Cryptosporidium* treatment requirements.

(a) *Determination of mean Cryptosporidium level.* (1) Following completion of the initial source water monitoring required under § 141.701(a), unfiltered systems must calculate the arithmetic mean of all *Cryptosporidium* sample concentrations reported under § 141.701(a). Systems must report this value to the State for approval no later than 6 months after the month the system is required to complete initial source water monitoring based on the schedule in § 141.701(c).

(2) Following completion of the second round of source water monitoring required under § 141.701(b), unfiltered systems must calculate the arithmetic mean of all *Cryptosporidium* sample concentrations reported under § 141.701(b). Systems must report this value to the State for approval no later than 6 months after the month the system is required to complete the second round of source water monitoring based on the schedule in § 141.701(c).

(3) If the monthly *Cryptosporidium* sampling frequency varies, systems must first calculate a monthly average for each month of monitoring. Systems must then use these monthly average concentrations, rather than individual sample concentrations, in the calculation of the mean *Cryptosporidium* level in paragraphs (a)(1) or (2) of this section.

(4) The report to the State of the mean *Cryptosporidium* levels calculated under paragraphs (a)(1) and (2) of this section must include a summary of the source water monitoring data used for the calculation.

(5) Failure to comply with the conditions of paragraph (a) of this section is a violation of the treatment technique requirement.

(b) *Cryptosporidium inactivation requirements.* Unfiltered systems must provide the level of inactivation for *Cryptosporidium* specified in this paragraph, based on their mean *Cryptosporidium* levels as determined under paragraph (a) of this section and according to the schedule in § 141.713.

(1) Unfiltered systems with a mean *Cryptosporidium* level of 0.01 oocysts/L or less must provide at least 2-log *Cryptosporidium* inactivation.

(2) Unfiltered systems with a mean *Cryptosporidium* level of greater than 0.01 oocysts/L must provide at least 3-log *Cryptosporidium* inactivation.

(c) *Inactivation treatment technology requirements.* Unfiltered systems must use chlorine dioxide, ozone, or UV as described in § 141.720 to meet the *Cryptosporidium* inactivation requirements of this section.

(1) Systems that use chlorine dioxide or ozone and fail to achieve the *Cryptosporidium* inactivation required in paragraph (b) of this section on more than one day in the calendar month are in violation of the treatment technique requirement.

(2) Systems that use UV light and fail to achieve the *Cryptosporidium* inactivation required in paragraph (b) of this section by meeting the criteria in § 141.720(d)(3)(ii) are in violation of the treatment technique requirement.

(d) *Use of two disinfectants.* Unfiltered systems must meet the combined *Cryptosporidium* inactivation requirements of this section and *Giardia lamblia* and virus inactivation requirements of § 141.72(a) using a minimum of two disinfectants, and each of two disinfectants must separately achieve the total inactivation required for either *Cryptosporidium*, *Giardia lamblia*, or viruses.

§ 141.713 Schedule for compliance with *Cryptosporidium* treatment requirements.

(a) Following initial bin classification under § 141.710(c), filtered systems must provide the level of treatment for *Cryptosporidium* required under § 141.711 according to the schedule in paragraph (c) of this section.

(b) Following initial determination of the mean *Cryptosporidium* level under § 141.712(a)(1), unfiltered systems must provide the level of treatment for *Cryptosporidium* required under § 141.712 according to the schedule in paragraph (c) of this section.

(c) *Cryptosporidium treatment compliance dates.*

CRYPTOSPORIDIUM TREATMENT COMPLIANCE DATES TABLE

Systems that serve . . .	Must comply with Cryptosporidium treatment requirements no later than . . .[a]
(1) At least 100,000 people ...	(i) April 1, 2012.
(2) From 50,000 to 99,999 people.	(i) October 1, 2012.
(3) From 10,000 to 49,999 people.	(i) October 1, 2013.
(4) Fewer than 10,000 people	(i) October 1, 2014.

[a] States may allow up to an additional two years for complying with the treatment requirement for systems making capital improvements.

(d) If the bin classification for a filtered system changes following the second round of source water monitoring, as determined under § 141.710(d), the system must provide the level of treatment for *Cryptosporidium* required under § 141.711 on a schedule the State approves.

(e) If the mean *Cryptosporidium* level for an unfiltered system changes following the second round of monitoring, as determined under § 141.712(a)(2), and if the system must provide a different level of *Cryptosporidium* treatment under § 141.712 due to this change, the system must meet this treatment requirement on a schedule the State approves.

§ 141.714 Requirements for uncovered finished water storage facilities.

(a) Systems using uncovered finished water storage facilities must comply with the conditions of this section.

(b) Systems must notify the State of the use of each uncovered finished water storage facility no later than April 1, 2008.

(c) Systems must meet the conditions of paragraph (c)(1) or (2) of this section for each uncovered finished water storage facility or be in compliance with a State-approved schedule to meet these conditions no later than April 1, 2009.

(1) Systems must cover any uncovered finished water storage facility.

(2) Systems must treat the discharge from the uncovered finished water storage facility to the distribution system to achieve inactivation and/or removal of at least 4-log virus, 3-log *Giardia lamblia*, and 2-log *Cryptosporidium* using a protocol approved by the State.

(d) Failure to comply with the requirements of this section is a violation of the treatment technique requirement.

REQUIREMENTS FOR MICROBIAL TOOLBOX COMPONENTS

§ 141.715 Microbial toolbox options for meeting *Cryptosporidium* treatment requirements.

(a)(1) Systems receive the treatment credits listed in the table in paragraph (b) of this section by meeting the conditions for microbial toolbox options described in §§ 141.716 through 141.720. Systems apply these treatment credits to meet the treatment requirements in § 141.711 or § 141.712, as applicable.

(2) Unfiltered systems are eligible for treatment credits for the microbial toolbox options described in § 141.720 only.

(b) The following table summarizes options in the microbial toolbox:

MICROBIAL TOOLBOX SUMMARY TABLE: OPTIONS, TREATMENT CREDITS AND CRITERIA

Toolbox Option	*Cryptosporidium* treatment credit with design and implementation criteria
Source Protection and Management Toolbox Options	
(1) Watershed control program	0.5-log credit for State-approved program comprising required elements, annual program status report to State, and regular watershed survey. Unfiltered systems are not eligible for credit. Specific criteria are in § 141.716(a).

MICROBIAL TOOLBOX SUMMARY TABLE: OPTIONS, TREATMENT CREDITS AND CRITERIA—Continued

Toolbox Option	*Cryptosporidium* treatment credit with design and implementation criteria
(2) Alternative source/intake management	No prescribed credit. Systems may conduct simultaneous monitoring for treatment bin classification at alternative intake locations or under alternative intake management strategies. Specific criteria are in § 141.716(b).
Pre Filtration Toolbox Options	
(3) Presedimentation basin with coagulation.	0.5-log credit during any month that presedimentation basins achieve a monthly mean reduction of 0.5-log or greater in turbidity or alternative State-approved performance criteria. To be eligible, basins must be operated continuously with coagulant addition and all plant flow must pass through basins. Specific criteria are in § 141.717(a).
(4) Two-stage lime softening	0.5-log credit for two-stage softening where chemical addition and hardness precipitation occur in both stages. All plant flow must pass through both stages. Single-stage softening is credited as equivalent to conventional treatment. Specific criteria are in § 141.717(b).
(5) Bank filtration	0.5-log credit for 25-foot setback; 1.0-log credit for 50-foot setback; aquifer must be unconsolidated sand containing at least 10 percent fines; average turbidity in wells must be less than 1 NTU. Systems using wells followed by filtration when conducting source water monitoring must sample the well to determine bin classification and are not eligible for additional credit. Specific criteria are in § 141.717(c).
Treatment Performance Toolbox Options	
(6) Combined filter performance	0.5-log credit for combined filter effluent turbidity less than or equal to 0.15 NTU in at least 95 percent of measurements each month. Specific criteria are in § 141.718(a).
(7) Individual filter performance	0.5-log credit (in addition to 0.5-log combined filter performance credit) if individual filter effluent turbidity is less than or equal to 0.15 NTU in at least 95 percent of samples each month in each filter and is never greater than 0.3 NTU in two consecutive measurements in any filter. Specific criteria are in § 141.718(b).
(8) Demonstration of performance	Credit awarded to unit process or treatment train based on a demonstration to the State with a State- approved protocol. Specific criteria are in § 141.718(c).
Additional Filtration Toolbox Options	
(9) Bag or cartridge filters (individual filters)	Up to 2-log credit based on the removal efficiency demonstrated during challenge testing with a 1.0-log factor of safety. Specific criteria are in § 141.719(a).
(10) Bag or cartridge filters (in series)	Up to 2.5-log credit based on the removal efficiency demonstrated during challenge testing with a 0.5-log factor of safety. Specific criteria are in § 141.719(a).
(11) Membrane filtration	Log credit equivalent to removal efficiency demonstrated in challenge test for device if supported by direct integrity testing. Specific criteria are in § 141.719(b).
(12) Second stage filtration	0.5-log credit for second separate granular media filtration stage if treatment train includes coagulation prior to first filter. Specific criteria are in § 141.719(c)
(13) Slow sand filters	2.5-log credit as a secondary filtration step; 3.0-log credit as a primary filtration process. No prior chlorination for either option. Specific criteria are in § 141.719(d).
Inactivation Toolbox Options	
(14) Chlorine dioxide	Log credit based on measured CT in relation to CT table. Specific criteria in § 141.720(b)
(15) Ozone	Log credit based on measured CT in relation to CT table. Specific criteria in § 141.720(b).
(16) UV	Log credit based on validated UV dose in relation to UV dose table; reactor validation testing required to establish UV dose and associated operating conditions. Specific criteria in § 141.720(d).

§ 141.716 Source toolbox components.

(a) *Watershed control program.* Systems receive 0.5-log *Cryptosporidium* treatment credit for implementing a watershed control program that meets the requirements of this section.

(1) Systems that intend to apply for the watershed control program credit must notify the State of this intent no later than two years prior to the treatment compliance date applicable to the system in § 141.713.

(2) Systems must submit to the State a proposed watershed control plan no later than one year before the applicable treatment compliance date in § 141.713. The State must approve the

watershed control plan for the system to receive watershed control program treatment credit. The watershed control plan must include the elements in paragraphs (a)(2)(i) through (iv) of this section.

(i) Identification of an ''area of influence'' outside of which the likelihood of *Cryptosporidium* or fecal contamination affecting the treatment plant intake is not significant. This is the area to be evaluated in future watershed surveys under paragraph (a)(5)(ii) of this section.

(ii) Identification of both potential and actual sources of *Cryptosporidium* contamination and an assessment of the relative impact of these sources on the system's source water quality.

(iii) An analysis of the effectiveness and feasibility of control measures that could reduce *Cryptosporidium* loading from sources of contamination to the system's source water.

(iv) A statement of goals and specific actions the system will undertake to reduce source water *Cryptosporidium* levels. The plan must explain how the actions are expected to contribute to specific goals, identify watershed partners and their roles, identify resource requirements and commitments, and include a schedule for plan implementation with deadlines for completing specific actions identified in the plan.

(3) Systems with existing watershed control programs (*i.e.*, programs in place on January 5, 2006) are eligible to seek this credit. Their watershed control plans must meet the criteria in paragraph (a)(2) of this section and must specify ongoing and future actions that will reduce source water *Cryptosporidium* levels.

(4) If the State does not respond to a system regarding approval of a watershed control plan submitted under this section and the system meets the other requirements of this section, the watershed control program will be considered approved and 0.5 log *Cryptosporidium* treatment credit will be awarded unless and until the State subsequently withdraws such approval.

(5) Systems must complete the actions in paragraphs (a)(5)(i) through (iii) of this section to maintain the 0.5-log credit.

(i) Submit an annual watershed control program status report to the State. The annual watershed control program status report must describe the system's implementation of the approved plan and assess the adequacy of the plan to meet its goals. It must explain how the system is addressing any shortcomings in plan implementation, including those previously identified by the State or as the result of the watershed survey conducted under paragraph (a)(5)(ii) of this section. It must also describe any significant changes that have occurred in the watershed since the last watershed sanitary survey. If a system determines during implementation that making a significant change to its approved watershed control program is necessary, the system must notify the State prior to making any such changes. If any change is likely to reduce the level of source water protection, the system must also list in its notification the actions the system will take to mitigate this effect.

(ii) Undergo a watershed sanitary survey every three years for community water systems and every five years for noncommunity water systems and submit the survey report to the State. The survey must be conducted according to State guidelines and by persons the State approves.

(A) The watershed sanitary survey must meet the following criteria: encompass the region identified in the State-approved watershed control plan as the area of influence; assess the implementation of actions to reduce source water *Cryptosporidium* levels; and identify any significant new sources of *Cryptosporidium*.

(B) If the State determines that significant changes may have occurred in the watershed since the previous watershed sanitary survey, systems must undergo another watershed sanitary survey by a date the State requires, which may be earlier than the regular date in paragraph (a)(5)(ii) of this section.

(iii) The system must make the watershed control plan, annual status reports, and watershed sanitary survey reports available to the public upon request. These documents must be in a

plain language style and include criteria by which to evaluate the success of the program in achieving plan goals. The State may approve systems to withhold from the public portions of the annual status report, watershed control plan, and watershed sanitary survey based on water supply security considerations.

(6) If the State determines that a system is not carrying out the approved watershed control plan, the State may withdraw the watershed control program treatment credit.

(b) *Alternative source.* (1) A system may conduct source water monitoring that reflects a different intake location (either in the same source or for an alternate source) or a different procedure for the timing or level of withdrawal from the source (alternative source monitoring). If the State approves, a system may determine its bin classification under § 141.710 based on the alternative source monitoring results.

(2) If systems conduct alternative source monitoring under paragraph (b)(1) of this section, systems must also monitor their current plant intake concurrently as described in § 141.701.

(3) Alternative source monitoring under paragraph (b)(1) of this section must meet the requirements for source monitoring to determine bin classification, as described in §§ 141.701 through 141.706. Systems must report the alternative source monitoring results to the State, along with supporting information documenting the operating conditions under which the samples were collected.

(4) If a system determines its bin classification under § 141.710 using alternative source monitoring results that reflect a different intake location or a different procedure for managing the timing or level of withdrawal from the source, the system must relocate the intake or permanently adopt the withdrawal procedure, as applicable, no later than the applicable treatment compliance date in § 141.713.

§ 141.717 Pre-filtration treatment toolbox components.

(a) *Presedimentation.* Systems receive 0.5-log *Cryptosporidium* treatment credit for a presedimentation basin during any month the process meets the criteria in this paragraph.

(1) The presedimentation basin must be in continuous operation and must treat the entire plant flow taken from a surface water or GWUDI source.

(2) The system must continuously add a coagulant to the presedimentation basin.

(3) The presedimentation basin must achieve the performance criteria in paragraph (3)(i) or (ii) of this section.

(i) Demonstrates at least 0.5-log mean reduction of influent turbidity. This reduction must be determined using daily turbidity measurements in the presedimentation process influent and effluent and must be calculated as follows: $\log_{10}$(monthly mean of daily influent turbidity) − $\log_{10}$(monthly mean of daily effluent turbidity).

(ii) Complies with State-approved performance criteria that demonstrate at least 0.5-log mean removal of micron-sized particulate material through the presedimentation process.

(b) *Two-stage lime softening.* Systems receive an additional 0.5-log *Cryptosporidium* treatment credit for a two-stage lime softening plant if chemical addition and hardness precipitation occur in two separate and sequential softening stages prior to filtration. Both softening stages must treat the entire plant flow taken from a surface water or GWUDI source.

(c) *Bank filtration.* Systems receive *Cryptosporidium* treatment credit for bank filtration that serves as pretreatment to a filtration plant by meeting the criteria in this paragraph. Systems using bank filtration when they begin source water monitoring under § 141.701(a) must collect samples as described in § 141.703(d) and are not eligible for this credit.

(1) Wells with a ground water flow path of at least 25 feet receive 0.5-log treatment credit; wells with a ground water flow path of at least 50 feet receive 1.0-log treatment credit. The ground water flow path must be determined as specified in paragraph (c)(4) of this section.

(2) Only wells in granular aquifers are eligible for treatment credit. Granular aquifers are those comprised

of sand, clay, silt, rock fragments, pebbles or larger particles, and minor cement. A system must characterize the aquifer at the well site to determine aquifer properties. Systems must extract a core from the aquifer and demonstrate that in at least 90 percent of the core length, grains less than 1.0 mm in diameter constitute at least 10 percent of the core material.

(3) Only horizontal and vertical wells are eligible for treatment credit.

(4) For vertical wells, the ground water flow path is the measured distance from the edge of the surface water body under high flow conditions (determined by the 100 year floodplain elevation boundary or by the floodway, as defined in Federal Emergency Management Agency flood hazard maps) to the well screen. For horizontal wells, the ground water flow path is the measured distance from the bed of the river under normal flow conditions to the closest horizontal well lateral screen.

(5) Systems must monitor each wellhead for turbidity at least once every four hours while the bank filtration process is in operation. If monthly average turbidity levels, based on daily maximum values in the well, exceed 1 NTU, the system must report this result to the State and conduct an assessment within 30 days to determine the cause of the high turbidity levels in the well. If the State determines that microbial removal has been compromised, the State may revoke treatment credit until the system implements corrective actions approved by the State to remediate the problem.

(6) Springs and infiltration galleries are not eligible for treatment credit under this section, but are eligible for credit under § 141.718(c).

(7) *Bank filtration demonstration of performance*. The State may approve *Cryptosporidium* treatment credit for bank filtration based on a demonstration of performance study that meets the criteria in this paragraph. This treatment credit may be greater than 1.0-log and may be awarded to bank filtration that does not meet the criteria in paragraphs (c)(1)–(5) of this section.

(i) The study must follow a State-approved protocol and must involve the collection of data on the removal of *Cryptosporidium* or a surrogate for *Cryptosporidium* and related hydrogeologic and water quality parameters during the full range of operating conditions.

(ii) The study must include sampling both from the production well(s) and from monitoring wells that are screened and located along the shortest flow path between the surface water source and the production well(s).

§ 141.718 Treatment performance toolbox components.

(a) *Combined filter performance*. Systems using conventional filtration treatment or direct filtration treatment receive an additional 0.5-log *Cryptosporidium* treatment credit during any month the system meets the criteria in this paragraph. Combined filter effluent (CFE) turbidity must be less than or equal to 0.15 NTU in at least 95 percent of the measurements. Turbidity must be measured as described in § 141.74(a) and (c).

(b) *Individual filter performance*. Systems using conventional filtration treatment or direct filtration treatment receive 0.5-log *Cryptosporidium* treatment credit, which can be in addition to the 0.5-log credit under paragraph (a) of this section, during any month the system meets the criteria in this paragraph. Compliance with these criteria must be based on individual filter turbidity monitoring as described in § 141.174 or § 141.560, as applicable.

(1) The filtered water turbidity for each individual filter must be less than or equal to 0.15 NTU in at least 95 percent of the measurements recorded each month.

(2) No individual filter may have a measured turbidity greater than 0.3 NTU in two consecutive measurements taken 15 minutes apart.

(3) Any system that has received treatment credit for individual filter performance and fails to meet the requirements of paragraph (b)(1) or (2) of this section during any month does not receive a treatment technique violation under § 141.711(c) if the State determines the following:

(i) The failure was due to unusual and short-term circumstances that could not reasonably be prevented

through optimizing treatment plant design, operation, and maintenance.

(ii) The system has experienced no more than two such failures in any calendar year.

(c) *Demonstration of performance*. The State may approve *Cryptosporidium* treatment credit for drinking water treatment processes based on a demonstration of performance study that meets the criteria in this paragraph. This treatment credit may be greater than or less than the prescribed treatment credits in § 141.711 or §§ 141.717 through 141.720 and may be awarded to treatment processes that do not meet the criteria for the prescribed credits.

(1) Systems cannot receive the prescribed treatment credit for any toolbox box option in §§ 141.717 through 141.720 if that toolbox option is included in a demonstration of performance study for which treatment credit is awarded under this paragraph.

(2) The demonstration of performance study must follow a State-approved protocol and must demonstrate the level of *Cryptosporidium* reduction the treatment process will achieve under the full range of expected operating conditions for the system.

(3) Approval by the State must be in writing and may include monitoring and treatment performance criteria that the system must demonstrate and report on an ongoing basis to remain eligible for the treatment credit. The State may designate such criteria where necessary to verify that the conditions under which the demonstration of performance credit was approved are maintained during routine operation.

§ 141.719 Additional filtration toolbox components.

(a) *Bag and cartridge filters*. Systems receive *Cryptosporidium* treatment credit of up to 2.0-log for individual bag or cartridge filters and up to 2.5-log for bag or cartridge filters operated in series by meeting the criteria in paragraphs (a)(1) through (10) of this section. To be eligible for this credit, systems must report the results of challenge testing that meets the requirements of paragraphs (a)(2) through (9) of this section to the State. The filters must treat the entire plant flow taken from a subpart H source.

(1) The *Cryptosporidium* treatment credit awarded to bag or cartridge filters must be based on the removal efficiency demonstrated during challenge testing that is conducted according to the criteria in paragraphs (a)(2) through (a)(9) of this section. A factor of safety equal to 1-log for individual bag or cartridge filters and 0.5-log for bag or cartridge filters in series must be applied to challenge testing results to determine removal credit. Systems may use results from challenge testing conducted prior to January 5, 2006 if the prior testing was consistent with the criteria specified in paragraphs (a)(2) through (9) of this section.

(2) Challenge testing must be performed on full-scale bag or cartridge filters, and the associated filter housing or pressure vessel, that are identical in material and construction to the filters and housings the system will use for removal of *Cryptosporidium*. Bag or cartridge filters must be challenge tested in the same configuration that the system will use, either as individual filters or as a series configuration of filters.

(3) Challenge testing must be conducted using *Cryptosporidium* or a surrogate that is removed no more efficiently than *Cryptosporidium*. The microorganism or surrogate used during challenge testing is referred to as the challenge particulate. The concentration of the challenge particulate must be determined using a method capable of discreetly quantifying the specific microorganism or surrogate used in the test; gross measurements such as turbidity may not be used.

(4) The maximum feed water concentration that can be used during a challenge test must be based on the detection limit of the challenge particulate in the filtrate (*i.e.*, filtrate detection limit) and must be calculated using the following equation:

$$\text{Maximum Feed Concentration} = 1 \times 10^4 \times (\text{Filtrate Detection Limit})$$

(5) Challenge testing must be conducted at the maximum design flow rate for the filter as specified by the manufacturer.

(6) Each filter evaluated must be tested for a duration sufficient to reach 100 percent of the terminal pressure

drop, which establishes the maximum pressure drop under which the filter may be used to comply with the requirements of this subpart.

(7) Removal efficiency of a filter must be determined from the results of the challenge test and expressed in terms of log removal values using the following equation:

$$LRV = LOG_{10}(C_f) - LOG_{10}(C_p)$$

Where:

LRV = log removal value demonstrated during challenge testing; C_f = the feed concentration measured during the challenge test; and C_p = the filtrate concentration measured during the challenge test. In applying this equation, the same units must be used for the feed and filtrate concentrations. If the challenge particulate is not detected in the filtrate, then the term C_p must be set equal to the detection limit.

(8) Each filter tested must be challenged with the challenge particulate during three periods over the filtration cycle: within two hours of start-up of a new filter; when the pressure drop is between 45 and 55 percent of the terminal pressure drop; and at the end of the cycle after the pressure drop has reached 100 percent of the terminal pressure drop. An LRV must be calculated for each of these challenge periods for each filter tested. The LRV for the filter (LRV_{filter}) must be assigned the value of the minimum LRV observed during the three challenge periods for that filter.

(9) If fewer than 20 filters are tested, the overall removal efficiency for the filter product line must be set equal to the lowest LRV_{filter} among the filters tested. If 20 or more filters are tested, the overall removal efficiency for the filter product line must be set equal to the 10th percentile of the set of LRV_{filter} values for the various filters tested. The percentile is defined by (i/(n + 1)) where i is the rank of n individual data points ordered lowest to highest. If necessary, the 10th percentile may be calculated using linear interpolation.

(10) If a previously tested filter is modified in a manner that could change the removal efficiency of the filter product line, challenge testing to demonstrate the removal efficiency of the modified filter must be conducted and submitted to the State.

(b) *Membrane filtration*. (1) Systems receive *Cryptosporidium* treatment credit for membrane filtration that meets the criteria of this paragraph. Membrane cartridge filters that meet the definition of membrane filtration in §141.2 are eligible for this credit. The level of treatment credit a system receives is equal to the lower of the values determined under paragraph (b)(1)(i) and (ii) of this section.

(i) The removal efficiency demonstrated during challenge testing conducted under the conditions in paragraph (b)(2) of this section.

(ii) The maximum removal efficiency that can be verified through direct integrity testing used with the membrane filtration process under the conditions in paragraph (b)(3) of this section.

(2) *Challenge testing*. The membrane used by the system must undergo challenge testing to evaluate removal efficiency, and the system must report the results of challenge testing to the State. Challenge testing must be conducted according to the criteria in paragraphs (b)(2)(i) through (vii) of this section. Systems may use data from challenge testing conducted prior to January 5, 2006 if the prior testing was consistent with the criteria in paragraphs (b)(2)(i) through (vii) of this section.

(i) Challenge testing must be conducted on either a full-scale membrane module, identical in material and construction to the membrane modules used in the system's treatment facility, or a smaller-scale membrane module, identical in material and similar in construction to the full-scale module. A module is defined as the smallest component of a membrane unit in which a specific membrane surface area is housed in a device with a filtrate outlet structure.

(ii) Challenge testing must be conducted using *Cryptosporidium* oocysts or a surrogate that is removed no more efficiently than *Cryptosporidium* oocysts. The organism or surrogate used during challenge testing is referred to as the challenge particulate. The concentration of the challenge particulate, in both the feed and filtrate water, must be determined using a method capable of discretely quantifying the specific

challenge particulate used in the test; gross measurements such as turbidity may not be used.

(iii) The maximum feed water concentration that can be used during a challenge test is based on the detection limit of the challenge particulate in the filtrate and must be determined according to the following equation:

$$\text{Maximum Feed Concentration} = 3.16 \times 10^6 \times (\text{Filtrate Detection Limit})$$

(iv) Challenge testing must be conducted under representative hydraulic conditions at the maximum design flux and maximum design process recovery specified by the manufacturer for the membrane module. Flux is defined as the throughput of a pressure driven membrane process expressed as flow per unit of membrane area. Recovery is defined as the volumetric percent of feed water that is converted to filtrate over the course of an operating cycle uninterrupted by events such as chemical cleaning or a solids removal process (*i.e.*, backwashing).

(v) Removal efficiency of a membrane module must be calculated from the challenge test results and expressed as a log removal value according to the following equation:

$$LRV = LOG_{10}(C_f) - LOG_{10}(C_p)$$

Where:

LRV = log removal value demonstrated during the challenge test; C_f = the feed concentration measured during the challenge test; and C_p = the filtrate concentration measured during the challenge test. Equivalent units must be used for the feed and filtrate concentrations. If the challenge particulate is not detected in the filtrate, the term C_p is set equal to the detection limit for the purpose of calculating the LRV. An LRV must be calculated for each membrane module evaluated during the challenge test.

(vi) The removal efficiency of a membrane filtration process demonstrated during challenge testing must be expressed as a log removal value ($LRV_{C\text{-}Test}$). If fewer than 20 modules are tested, then $LRV_{C\text{-}Test}$ is equal to the lowest of the representative LRVs among the modules tested. If 20 or more modules are tested, then $LRV_{C\text{-}Test}$ is equal to the 10th percentile of the representative LRVs among the modules tested. The percentile is defined by (i/(n + 1)) where i is the rank of n individual data points ordered lowest to highest. If necessary, the 10th percentile may be calculated using linear interpolation.

(vii) The challenge test must establish a quality control release value (QCRV) for a non-destructive performance test that demonstrates the *Cryptosporidium* removal capability of the membrane filtration module. This performance test must be applied to each production membrane module used by the system that was not directly challenge tested in order to verify *Cryptosporidium* removal capability. Production modules that do not meet the established QCRV are not eligible for the treatment credit demonstrated during the challenge test.

(viii) If a previously tested membrane is modified in a manner that could change the removal efficiency of the membrane or the applicability of the non-destructive performance test and associated QCRV, additional challenge testing to demonstrate the removal efficiency of, and determine a new QCRV for, the modified membrane must be conducted and submitted to the State.

(3) *Direct integrity testing.* Systems must conduct direct integrity testing in a manner that demonstrates a removal efficiency equal to or greater than the removal credit awarded to the membrane filtration process and meets the requirements described in paragraphs (b)(3)(i) through (vi) of this section. A direct integrity test is defined as a physical test applied to a membrane unit in order to identify and isolate integrity breaches (*i.e.*, one or more leaks that could result in contamination of the filtrate).

(i) The direct integrity test must be independently applied to each membrane unit in service. A membrane unit is defined as a group of membrane modules that share common valving that allows the unit to be isolated from the rest of the system for the purpose of integrity testing or other maintenance.

(ii) The direct integrity method must have a resolution of 3 micrometers or less, where resolution is defined as the size of the smallest integrity breach

that contributes to a response from the direct integrity test.

(iii) The direct integrity test must have a sensitivity sufficient to verify the log treatment credit awarded to the membrane filtration process by the State, where sensitivity is defined as the maximum log removal value that can be reliably verified by a direct integrity test. Sensitivity must be determined using the approach in either paragraph (b)(3)(iii)(A) or (B) of this section as applicable to the type of direct integrity test the system uses.

(A) For direct integrity tests that use an applied pressure or vacuum, the direct integrity test sensitivity must be calculated according to the following equation:

$$LRV_{DIT} = LOG_{10}\ (Q_p\ /(VCF \times Q_{breach}))$$

Where:

LRV_{DIT} = the sensitivity of the direct integrity test; Q_p = total design filtrate flow from the membrane unit; Q_{breach} = flow of water from an integrity breach associated with the smallest integrity test response that can be reliably measured, and VCF = volumetric concentration factor. The volumetric concentration factor is the ratio of the suspended solids concentration on the high pressure side of the membrane relative to that in the feed water.

(B) For direct integrity tests that use a particulate or molecular marker, the direct integrity test sensitivity must be calculated according to the following equation:

$$LRV_{DIT} = LOG_{10}(C_f) - LOG_{10}(C_p)$$

Where:

LRV_{DIT} = the sensitivity of the direct integrity test; C_f = the typical feed concentration of the marker used in the test; and C_p = the filtrate concentration of the marker from an integral membrane unit.

(iv) Systems must establish a control limit within the sensitivity limits of the direct integrity test that is indicative of an integral membrane unit capable of meeting the removal credit awarded by the State.

(v) If the result of a direct integrity test exceeds the control limit established under paragraph (b)(3)(iv) of this section, the system must remove the membrane unit from service. Systems must conduct a direct integrity test to verify any repairs, and may return the membrane unit to service only if the direct integrity test is within the established control limit.

(vi) Systems must conduct direct integrity testing on each membrane unit at a frequency of not less than once each day that the membrane unit is in operation. The State may approve less frequent testing, based on demonstrated process reliability, the use of multiple barriers effective for *Cryptosporidium*, or reliable process safeguards.

(4) *Indirect integrity monitoring*. Systems must conduct continuous indirect integrity monitoring on each membrane unit according to the criteria in paragraphs (b)(4)(i) through (v) of this section. Indirect integrity monitoring is defined as monitoring some aspect of filtrate water quality that is indicative of the removal of particulate matter. A system that implements continuous direct integrity testing of membrane units in accordance with the criteria in paragraphs (b)(3)(i) through (v) of this section is not subject to the requirements for continuous indirect integrity monitoring. Systems must submit a monthly report to the State summarizing all continuous indirect integrity monitoring results triggering direct integrity testing and the corrective action that was taken in each case.

(i) Unless the State approves an alternative parameter, continuous indirect integrity monitoring must include continuous filtrate turbidity monitoring.

(ii) Continuous monitoring must be conducted at a frequency of no less than once every 15 minutes.

(iii) Continuous monitoring must be separately conducted on each membrane unit.

(iv) If indirect integrity monitoring includes turbidity and if the filtrate turbidity readings are above 0.15 NTU for a period greater than 15 minutes (*i.e.*, two consecutive 15-minute readings above 0.15 NTU), direct integrity testing must immediately be performed on the associated membrane unit as specified in paragraphs (b)(3)(i) through (v) of this section.

(v) If indirect integrity monitoring includes a State-approved alternative

parameter and if the alternative parameter exceeds a State-approved control limit for a period greater than 15 minutes, direct integrity testing must immediately be performed on the associated membrane units as specified in paragraphs (b)(3)(i) through (v) of this section.

(c) *Second stage filtration*. Systems receive 0.5-log *Cryptosporidium* treatment credit for a separate second stage of filtration that consists of sand, dual media, GAC, or other fine grain media following granular media filtration if the State approves. To be eligible for this credit, the first stage of filtration must be preceded by a coagulation step and both filtration stages must treat the entire plant flow taken from a surface water or GWUDI source. A cap, such as GAC, on a single stage of filtration is not eligible for this credit. The State must approve the treatment credit based on an assessment of the design characteristics of the filtration process.

(d) *Slow sand filtration (as secondary filter)*. Systems are eligible to receive 2.5-log *Cryptosporidium* treatment credit for a slow sand filtration process that follows a separate stage of filtration if both filtration stages treat entire plant flow taken from a surface water or GWUDI source and no disinfectant residual is present in the influent water to the slow sand filtration process. The State must approve the treatment credit based on an assessment of the design characteristics of the filtration process. This paragraph does not apply to treatment credit awarded to slow sand filtration used as a primary filtration process.

[71 FR 769, Jan. 5, 2006; 71 FR 6136, Feb. 6, 2006]

§ 141.720 Inactivation toolbox components.

(a) *Calculation of CT values*. (1) CT is the product of the disinfectant contact time (T, in minutes) and disinfectant concentration (C, in milligrams per liter). Systems with treatment credit for chlorine dioxide or ozone under paragraph (b) or (c) of this section must calculate CT at least once each day, with both C and T measured during peak hourly flow as specified in §§ 141.74(a) through (b).

(2) Systems with several disinfection segments in sequence may calculate CT for each segment, where a disinfection segment is defined as a treatment unit process with a measurable disinfectant residual level and a liquid volume. Under this approach, systems must add the *Cryptosporidium* CT values in each segment to determine the total CT for the treatment plant.

(b) *CT values for chlorine dioxide and ozone*. (1) Systems receive the *Cryptosporidium* treatment credit listed in this table by meeting the corresponding chlorine dioxide CT value for the applicable water temperature, as described in paragraph (a) of this section.

CT VALUES (MG·MIN/L) FOR *Cryptosporidium* INACTIVATION BY CHLORINE DIOXIDE [1]

Log credit	Water Temperature, °C										
	≤0.5	1	2	3	5	7	10	15	20	25	30
(i) 0.25	159	153	140	128	107	90	69	45	29	19	12
(ii) 0.5	319	305	279	256	214	180	138	89	58	38	24
(iii) 1.0	637	610	558	511	429	360	277	179	116	75	49
(iv) 1.5	956	915	838	767	643	539	415	268	174	113	73
(v) 2.0	1275	1220	1117	1023	858	719	553	357	232	150	98
(vi) 2.5	1594	1525	1396	1278	1072	899	691	447	289	188	122
(vii) 3.0	1912	1830	1675	1534	1286	1079	830	536	347	226	147

[1] Systems may use this equation to determine log credit between the indicated values: Log credit = $(0.001506 \times (1.09116)^{Temp}) \times CT$.

(2) Systems receive the *Cryptosporidium* treatment credit listed in this table by meeting the corresponding ozone CT values for the applicable water temperature, as described in paragraph (a) of this section.

CT VALUES (MG·MIN/L) FOR *Cryptosporidium* INACTIVATION BY OZONE [1]

Log credit	Water Temperature, °C										
	≤0.5	1	2	3	5	7	10	15	20	25	30
(i) 0.25	6.0	5.8	5.2	4.8	4.0	3.3	2.5	1.6	1.0	0.6	0.39
(ii) 0.5	12	12	10	9.5	7.9	6.5	4.9	3.1	2.0	1.2	0.78
(iii) 1.0	24	23	21	19	16	13	9.9	6.2	3.9	2.5	1.6
(iv) 1.5	36	35	31	29	24	20	15	9.3	5.9	3.7	2.4
(v) 2.0	48	46	42	38	32	26	20	12	7.8	4.9	3.1
(vi) 2.5	60	58	52	48	40	33	25	16	9.8	6.2	3.9
(vii) 3.0	72	69	63	57	47	39	30	19	12	7.4	4.7

[1] Systems may use this equation to determine log credit between the indicated values: Log credit = $(0.0397 \times (1.09757)^{Temp}) \times CT$.

(c) *Site-specific study*. The State may approve alternative chlorine dioxide or ozone CT values to those listed in paragraph (b) of this section on a site-specific basis. The State must base this approval on a site-specific study a system conducts that follows a State-approved protocol.

(d) *Ultraviolet light*. Systems receive *Cryptosporidium*, *Giardia lamblia*, and virus treatment credits for ultraviolet (UV) light reactors by achieving the corresponding UV dose values shown in paragraph (d)(1) of this section. Systems must validate and monitor UV reactors as described in paragraphs (d)(2) and (3) of this section to demonstrate that they are achieving a particular UV dose value for treatment credit.

(1) *UV dose table*. The treatment credits listed in this table are for UV light at a wavelength of 254 nm as produced by a low pressure mercury vapor lamp. To receive treatment credit for other lamp types, systems must demonstrate an equivalent germicidal dose through reactor validation testing, as described in paragraph (d)(2) of this section. The UV dose values in this table are applicable only to post-filter applications of UV in filtered systems and to unfiltered systems.

UV DOSE TABLE FOR *Cryptosporidium, Giardia lamblia,* AND VIRUS INACTIVATION CREDIT

Log credit	*Cryptosporidium* UV dose (mJ/cm²)	*Giardia lamblia* UV dose (mJ/cm²)	Virus UV dose (mJ/cm²)
(i) 0.5	1.6	1.5	39
(ii) 1.0	2.5	2.1	58
(iii) 1.5	3.9	3.0	79
(iv) 2.0	5.8	5.2	100
(v) 2.5	8.5	7.7	121
(vi) 3.0	12	11	143
(vii) 3.5	15	15	163
(viii) 4.0	22	22	186

(2) *Reactor validation testing*. Systems must use UV reactors that have undergone validation testing to determine the operating conditions under which the reactor delivers the UV dose required in paragraph (d)(1) of this section (*i.e.*, validated operating conditions). These operating conditions must include flow rate, UV intensity as measured by a UV sensor, and UV lamp status.

(i) When determining validated operating conditions, systems must account for the following factors: UV absorbance of the water; lamp fouling and aging; measurement uncertainty of online sensors; UV dose distributions arising from the velocity profiles through the reactor; failure of UV lamps or other critical system components; and inlet and outlet piping or channel configurations of the UV reactor.

(ii) Validation testing must include the following: Full scale testing of a reactor that conforms uniformly to the UV reactors used by the system and inactivation of a test microorganism whose dose response characteristics

have been quantified with a low pressure mercury vapor lamp.

(iii) The State may approve an alternative approach to validation testing.

(3) *Reactor monitoring.* (i) Systems must monitor their UV reactors to determine if the reactors are operating within validated conditions, as determined under paragraph (d)(2) of this section. This monitoring must include UV intensity as measured by a UV sensor, flow rate, lamp status, and other parameters the State designates based on UV reactor operation. Systems must verify the calibration of UV sensors and must recalibrate sensors in accordance with a protocol the State approves.

(ii) To receive treatment credit for UV light, systems must treat at least 95 percent of the water delivered to the public during each month by UV reactors operating within validated conditions for the required UV dose, as described in paragraphs (d)(1) and (2) of this section. Systems must demonstrate compliance with this condition by the monitoring required under paragraph (d)(3)(i) of this section.

REPORTING AND RECORDKEEPING REQUIREMENTS

§ 141.721 Reporting requirements.

(a) Systems must report sampling schedules under § 141.702 and source water monitoring results under § 141.706 unless they notify the State that they will not conduct source water monitoring due to meeting the criteria of § 141.701(d).

(b) Systems must report the use of uncovered finished water storage facilities to the State as described in § 141.714.

(c) Filtered systems must report their *Cryptosporidium* bin classification as described in § 141.710.

(d) Unfiltered systems must report their mean source water *Cryptosporidium* level as described in § 141.712.

(e) Systems must report disinfection profiles and benchmarks to the State as described in §§ 141.708 through 141.709 prior to making a significant change in disinfection practice.

(f) Systems must report to the State in accordance with the following table for any microbial toolbox options used to comply with treatment requirements under § 141.711 or § 141.712. Alternatively, the State may approve a system to certify operation within required parameters for treatment credit rather than reporting monthly operational data for toolbox options.

MICROBIAL TOOLBOX REPORTING REQUIREMENTS

Toolbox option	Systems must submit the following information	On the following schedule
(1) Watershed control program (WCP).	(i) Notice of intention to develop a new or continue an existing watershed control program.	No later than two years before the applicable treatment compliance date in § 141.713
	(ii) Watershed control plan	No later than one year before the applicable treatment compliance date in § 141.713.
	(iii) Annual watershed control program status report.	Every 12 months, beginning one year after the applicable treatment compliance date in § 141.713.
	(iv) Watershed sanitary survey report	For community water systems, every three years beginning three years after the applicable treatment compliance date in § 141.713. For noncommunity water systems, every five years beginning five years after the applicable treatment compliance date in § 141.713.
(2) Alternative source/intake management.	Verification that system has relocated the intake or adopted the intake withdrawal procedure reflected in monitoring results.	No later than the applicable treatment compliance date in § 141.713.

MICROBIAL TOOLBOX REPORTING REQUIREMENTS—Continued

Toolbox option	Systems must submit the following information	On the following schedule
(3) Presedimentation	Monthly verification of the following: (i) Continuous basin operation (ii) Treatment of 100% of the flow (iii) Continuous addition of a coagulant (iv) At least 0.5-log mean reduction of influent turbidity or compliance with alternative State-approved performance criteria.	Monthly reporting within 10 days following the month in which the monitoring was conducted, beginning on the applicable treatment compliance date in § 141.713.
(4) Two-stage lime softening	Monthly verification of the following: (i) Chemical addition and hardness precipitation occurred in two separate and sequential softening stages prior to filtration (ii) Both stages treated 100% of the plant flow.	Monthly reporting within 10 days following the month in which the monitoring was conducted, beginning on the applicable treatment compliance date in § 141.713.
(5) Bank filtration	(i) Initial demonstration of the following: (A) Unconsolidated, predominantly sandy aquifer (B) Setback distance of at least 25 ft. (0.5-log credit) or 50 ft. (1.0-log credit).	No later than the applicable treatment compliance date in § 141.713.
	(ii) If monthly average of daily max turbidity is greater than 1 NTU then system must report result and submit an assessment of the cause..	Report within 30 days following the month in which the monitoring was conducted, beginning on the applicable treatment compliance date in § 141.713.
(6) Combined filter performance	Monthly verification of combined filter effluent (CFE) turbidity levels less than or equal to 0.15 NTU in at least 95 percent of the 4 hour CFE measurements taken each month.	Monthly reporting within 10 days following the month in which the monitoring was conducted, beginning on the applicable treatment compliance date in § 141.713.
(7) Individual filter performance	Monthly verification of the following: (i) Individual filter effluent (IFE) turbidity levels less than or equal to 0.15 NTU in at least 95 percent of samples each month in each filter (ii) No individual filter greater than 0.3 NTU in two consecutive readings 15 minutes apart.	Monthly reporting within 10 days following the month in which the monitoring was conducted, beginning on the applicable treatment compliance date in § 141.713.]
(8) Demonstration of performance	(i) Results from testing following a State approved protocol.	No later than the applicable treatment compliance date in § 141.713.
	(ii) As required by the State, monthly verification of operation within conditions of State approval for demonstration of performance credit.	Within 10 days following the month in which monitoring was conducted, beginning on the applicable treatment compliance date in § 141.713.
(9) Bag filters and cartridge filters	(i) Demonstration that the following criteria are met: (A) Process meets the definition of bag or cartridge filtration; (B) Removal efficiency established through challenge testing that meets criteria in this subpart.	No later than the applicable treatment compliance date in § 141.713.
	(ii) Monthly verification that 100% of plant flow was filtered.	Within 10 days following the month in which monitoring was conducted, beginning on the applicable treatment compliance date in § 141.713.
(10) Membrane filtration	(i) Results of verification testing demonstrating the following: (A) Removal efficiency established through challenge testing that meets criteria in this subpart; (B) Integrity test method and parameters, including resolution, sensitivity, test frequency, control limits, and associated baseline.	No later than the applicable treatment compliance date in § 141.713.
	(ii) Monthly report summarizing the following: (A) All direct integrity tests above the control limit; (B) If applicable, any turbidity or alternative state-approved indirect integrity monitoring results triggering direct integrity testing and the corrective action that was taken.	Within 10 days following the month in which monitoring was conducted, beginning on the applicable treatment compliance date in § 141.713.
(11) Second stage filtration	Monthly verification that 100% of flow was filtered through both stages and that first stage was preceded by coagulation step.	Within 10 days following the month in which monitoring was conducted, beginning on the applicable treatment compliance date in § 141.713.

MICROBIAL TOOLBOX REPORTING REQUIREMENTS—Continued

Toolbox option	Systems must submit the following information	On the following schedule
(12) Slow sand filtration (as secondary filter).	Monthly verification that both a slow sand filter and a preceding separate stage of filtration treated 100% of flow from subpart H sources..	Within 10 days following the month in which monitoring was conducted, beginning on the applicable treatment compliance date in § 141.713.
(13) Chlorine dioxide	Summary of CT values for each day as described in § 141.720..	Within 10 days following the month in which monitoring was conducted, beginning on the applicable treatment compliance date in § 141.713.
(14) Ozone	Summary of CT values for each day as described in § 141.720..	Within 10 days following the month in which monitoring was conducted, beginning on the applicable treatment compliance date in § 141.713.
(15) UV	(i) Validation test results demonstrating operating conditions that achieve required UV dose.	No later than the applicable treatment compliance date in § 141.713.
	(ii) Monthly report summarizing the percentage of water entering the distribution system that was not treated by UV reactors operating within validated conditions for the required dose as specified in 141.720(d)..	Within 10 days following the month in which monitoring was conducted, beginning on the applicable treatment compliance date in § 141.713.

§ 141.722 Recordkeeping requirements.

(a) Systems must keep results from the initial round of source water monitoring under § 141.701(a) and the second round of source water monitoring under § 141.701(b) until 3 years after bin classification under § 141.710 for filtered systems or determination of the mean *Cryptosporidium* level under § 141.710 for unfiltered systems for the particular round of monitoring.

(b) Systems must keep any notification to the State that they will not conduct source water monitoring due to meeting the criteria of § 141.701(d) for 3 years.

(c) Systems must keep the results of treatment monitoring associated with microbial toolbox options under §§ 141.716 through 141.720 and with uncovered finished water reservoirs under § 141.714, as applicable, for 3 years.

REQUIREMENTS FOR SANITARY SURVEYS PERFORMED BY EPA

§ 141.723 Requirements to respond to significant deficiencies identified in sanitary surveys performed by EPA.

(a) A sanitary survey is an onsite review of the water source (identifying sources of contamination by using results of source water assessments where available), facilities, equipment, operation, maintenance, and monitoring compliance of a PWS to evaluate the adequacy of the PWS, its sources and operations, and the distribution of safe drinking water.

(b) For the purposes of this section, a significant deficiency includes a defect in design, operation, or maintenance, or a failure or malfunction of the sources, treatment, storage, or distribution system that EPA determines to be causing, or has the potential for causing the introduction of contamination into the water delivered to consumers.

(c) For sanitary surveys performed by EPA, systems must respond in writing to significant deficiencies identified in sanitary survey reports no later than 45 days after receipt of the report, indicating how and on what schedule the system will address significant deficiencies noted in the survey.

(d) Systems must correct significant deficiencies identified in sanitary survey reports according to the schedule approved by EPA, or if there is no approved schedule, according to the schedule reported under paragraph (c) of this section if such deficiencies are within the control of the system.

Subpart X—Aircraft Drinking Water Rule

SOURCE: 74 FR 53618, Oct. 19, 2009, unless otherwise noted.

§ 141.800 Applicability and compliance date.

(a) *Applicability*. The requirements of this subpart constitute the National Primary Drinking Water Regulations for aircraft that are public water systems and that board only finished water for human consumption. Aircraft public water systems are considered transient non-community water systems (TNCWS). To the extent there is a conflict between the requirements in this subpart and the regulatory requirements established elsewhere in this part, this subpart governs.

(b) *Compliance date*. Aircraft public water systems must comply, unless otherwise noted, with the requirements of this subpart beginning October 19, 2011. Until this compliance date, air carriers remain subject to existing national primary drinking water regulations.

§ 141.801 Definitions.

As used in this subpart, the term:

Administrator means the Administrator of the United States Environmental Protection Agency or his/her authorized representative.

Air carrier means a person who undertakes directly by lease, or other arrangement, to engage in air transportation. The air carrier is responsible for ensuring all of the aircraft it owns or operates that are public water systems comply with all provisions of this subpart.

Aircraft means a device that is used or intended to be used for flight in the air.

Aircraft water system means an aircraft that qualifies as a public water system under the Safe Drinking Water Act and the national primary drinking water regulations. The components of an aircraft water system include the water service panel, the filler neck of the aircraft finished water storage tank, and all finished water storage tanks, piping, treatment equipment, and plumbing fixtures within the aircraft that supply water for human consumption to passengers or crew.

Aircraft water system operations and maintenance plan means the schedules and procedures for operating, monitoring, and maintaining an aircraft water system that is included in an aircraft operation and maintenance program accepted by the Federal Aviation Administration. (14 CFR part 43, 14 CFR part 91, 14 CFR part 121)

Finished water means water that is introduced into the distribution system of a public water system and is intended for distribution and consumption without further treatment, except as treatment necessary to maintain water quality in the distribution system (e.g., supplemental disinfection, addition of corrosion control chemicals). (40 CFR 141.2)

Human consumption means drinking, bathing, showering, hand washing, teeth brushing, food preparation, dishwashing, and maintaining oral hygiene.

Self inspection means an onsite review of the aircraft water system, including the water service panel, the filler neck of the aircraft finished water storage tank; all finished water storage tanks, piping, treatment equipment, and plumbing fixtures; and a review of the aircraft operations, maintenance, monitoring, and recordkeeping for the purpose of evaluating the adequacy of such water system components and practices for providing safe drinking water to passengers and crew.

Watering point means the water supply, methods, and facilities used for the delivery of finished water to the aircraft. These facilities may include water trucks, carts, cabinets, and hoses.

§ 141.802 Coliform sampling plan.

(a) Each air carrier under this subpart must develop a coliform sampling plan covering each aircraft water system owned or operated by the air carrier that identifies the following:

(1) Coliform sample collection procedures that are consistent with the requirements of § 141.803(a) and (b).

(2) Sample tap location(s) representative of the aircraft water system as specified in § 141.803(b)(2) and (b)(4).

(3) Frequency and number of routine coliform samples to be collected as specified in § 141.803(b)(3).

(4) Frequency of routine disinfection and flushing as specified in the operations and maintenance plan under § 141.804.

(5) Procedures for communicating sample results promptly so that any

required actions, including repeat and follow-up sampling, corrective action, and notification of passengers and crew, will be conducted in a timely manner.

(b) Each air carrier must develop a coliform sampling plan for each aircraft with a water system meeting the definition of a public water system by April 19, 2011.

(c) The coliform sampling plan must be included in the Aircraft Water System Operations and Maintenance Plan required in § 141.804. Any subsequent changes to the coliform sampling plan must also be included in the Aircraft Water System Operations and Maintenance Plan required in § 141.804.

§ 141.803 Coliform sampling.

(a) *Analytical methodology*. Air carriers must follow the sampling and analysis requirements under this section.

(1) The standard sample volume required for total coliform analysis, regardless of analytical method used, is 100 mL.

(2) Air carriers need determine only the presence or absence of total coliforms and/or *E. coli*; a determination of density of these organisms is not required.

(3) Air carriers must conduct analyses for total coliform and *E. coli* in accordance with the analytical methods approved in § 141.21(f)(3) and 141.21(f)(6)) until March 31, 2016, and in accordance with the analytical methods approved in § 141.852 beginning April 1, 2016.

(4) The time from sample collection to initiation of analysis may not exceed 30 hours. Systems are encouraged but not required to hold samples below 10 °C during transit.

(5) The invalidation of a total coliform sample result can be made only by the Administrator in accordance with § 141.21(c)(1)(i), (ii), or (iii) or by the certified laboratory in accordance with § 141.21(c)(2) until March 31, 2016, or in accordance with § 141.853(c) beginning April 1, 2016, with the Administrator acting as the State.

(6) *Certified laboratories*. For the purpose of determining compliance with this subpart, samples may be considered only if they have been analyzed by a laboratory certified by a State or EPA. For the purposes of this paragraph, ''State'' refers to a State or Tribe that has received primacy for public water systems (other than aircraft water systems) under section 1413 of SDWA.

(b) *Routine monitoring*. For each aircraft water system, the sampling frequency must be determined by the disinfection and flushing frequency recommended by the aircraft water system manufacturer, when available, and as identified in the operations and maintenance plan in § 141.804.

(1) Except as provided in paragraph (b)(2) of this section, the air carrier must collect two 100 mL total coliform routine samples at the frequency specified in the sampling plan in § 141.802 and in accordance with paragraph (b)(3) of this section;

(2) The air carrier may collect one 100 mL total coliform routine sample at the frequency specified in the sampling plan in § 141.802 for aircraft with a removable or portable tank that is drained every day of passenger service, and the aircraft has only one tap. Aircraft meeting the requirements of this paragraph do not have to comply with paragraph (b)(4) of this section.

(3) Air carriers must perform routine monitoring for total coliform at a frequency corresponding to the frequency of routine disinfection and flushing as specified in the Table b–1 (Routine Disinfection and Flushing and Routine Sample Frequencies). Air carriers must follow the disinfection and flushing frequency recommended by the aircraft water system manufacturer, when available. Where the aircraft water system manufacturer does not specify a recommended routine disinfection and flushing frequency, the air carrier must choose a frequency from Table b–1 (Routine Disinfection and Flushing and Routine Sample Frequencies):

TABLE B–1—ROUTINE DISINFECTION AND FLUSHING AND ROUTINE SAMPLE FREQUENCIES

Minimum routine disinfection & flushing per aircraft	Minimum frequency of routine samples per aircraft
At least 4 times per year = At least once within every three-month period (quarterly).	At least 1 time per year = At least once within every twelve-month period (annually).
At least 3 times per year = At least once within every four-month period.	At least 2 times per year = At least once within every six-month period (semi-annually).
At least 2 times per year = At least once within every six-month period (semi-annually).	At least 4 times per year = At least once within every three-month period (quarterly).
At least 1 time per year or less = At least once within every twelve-month period (annually) or less.	At least 12 times per year = At least once every month (monthly).

(4) One sample must be taken from a lavatory and one from a galley; each sample must be analyzed for total coliform. If only one water tap is located in the aircraft water system due to aircraft model type and construction, then a single tap may be used to collect two separate 100 mL samples.

(5) If any routine, repeat, or follow-up coliform sample is total coliform-positive, the air carrier must analyze that total coliform-positive culture medium to determine if *E. coli* is present.

(6) Routine total coliform samples must not be collected within 72 hours after completing routine disinfection and flushing procedures.

(c) *Routine coliform sample results*—(1) *Negative routine coliform sample results.* If all routine sample results are total coliform-negative, then the air carrier must maintain the routine monitoring frequency for total coliform as specified in the sampling plan in § 141.802.

(2) *Positive routine E. coli sample results.* If any routine sample is *E. coli*-positive, the air carrier must perform all of the following:

(i) *Restrict public access.* Restrict public access to the aircraft water system in accordance with paragraph (d) of this section as expeditiously as possible, but in no case later than 24 hours after the laboratory notifies the air carrier of the *E. coli*-positive result or discovery of the applicable failure as specified in paragraphs (g) and (h) of this section. All public access restrictions, including applicable public notification requirements, must remain in-place until the aircraft water system has been disinfected and flushed and a complete set of follow-up samples is total coliform-negative; and

(ii) *Disinfect and flush.* Conduct disinfection and flushing in accordance with § 141.804(b)(2). If the aircraft water system cannot be physically disconnected or shut-off, or the flow of water otherwise prevented through the tap(s), then the air carrier must disinfect and flush the system no later than 72 hours after the laboratory notifies the air carrier of the *E. coli*-positive result or discovery of the applicable failure as specified in paragraphs (g) and (h) of this section; and

(iii) *Follow-up sampling.* Collect follow-up samples in accordance with paragraph (e) of this section. A complete set of follow-up sample results must be total coliform-negative before the air carrier provides water for human consumption from the aircraft water system and returns to the routine monitoring frequency as specified in the sampling plan required by § 141.802.

(3) *Positive routine total coliform sample results.* If any routine sample is total coliform-positive and *E. coli*-negative, then the air carrier must perform at least one of the following three corrective actions and continue through with that action until a complete set of follow-up or repeat samples is total coliform-negative:

(i) *Disinfect and flush.* In accordance with § 141.804(b)(2), conduct disinfection and flushing of the system no later than 72 hours after the laboratory notifies the air carrier of the total coliform-positive and *E. coli*-negative result. After disinfection and flushing is completed, the air carrier must collect follow-up samples in accordance with paragraph (e) of this section prior to providing water for human consumption from the aircraft water system. A complete set of follow-up sample results must be total coliform-negative before the air carrier returns to the

routine monitoring frequency as specified in the sampling plan required by § 141.802; or

(ii) *Restrict public access*. In accordance with paragraph (d) of this section, restrict public access to the aircraft water system as expeditiously as possible, but in no case later than 72 hours after the laboratory notifies the air carrier of the total coliform-positive and *E. coli*-negative result or discovery of the applicable failure as specified in paragraphs (f), (g), and, (i) of this section. All public access restrictions, including applicable public notification requirements, must remain in-place until the aircraft water system has been disinfected and flushed, and a complete set of follow-up samples has been collected. The air carrier must conduct disinfection and flushing in accordance with § 141.804(b)(2). After disinfection and flushing is completed, the air carrier must collect follow-up samples in accordance with paragraph (e) of this section prior to providing water for human consumption from the aircraft water system. A complete set of follow-up sample results must be total coliform-negative before the air carrier returns to the routine monitoring frequency as specified in the sampling plan required by § 141.802; or

(iii) *Repeat sampling*. Collect three 100 mL repeat samples no later than 24 hours after the laboratory notifies the air carrier of the routine total coliform-positive and *E. coli*-negative result. Repeat samples must be collected and analyzed from three taps within the aircraft as follows: The tap which resulted in the total coliform-positive sample, one other lavatory tap, and one other galley tap. If fewer than three taps exist, then a total of three 100 mL samples must be collected and analyzed from the available taps within the aircraft water system.

(A) If all repeat samples are total coliform-negative, then the air carrier must maintain the routine monitoring frequency for total coliform as specified in the sampling plan in § 141.802.

(B) If any repeat sample is *E. coli*-positive, the air carrier must perform all the corrective actions as specified in paragraphs (c)(2)(i), (c)(2)(ii), and (c)(2)(iii) of this section.

(C) If any repeat sample is total coliform-positive and *E. coli*-negative, then the air carrier must perform the corrective actions specified in paragraphs (c)(3)(i) or (c)(3)(ii) of this section, and continue through with that action until a complete set of follow-up samples is total coliform-negative.

(d) *Restriction of public access*. Restriction of public access to the aircraft water system includes, but need not be limited to, the following:

(1) Physically disconnecting or shutting off the aircraft water system, where feasible, or otherwise preventing the flow of water through the tap(s);

(2) Providing public notification to passengers and crew in accordance with § 141.805.

(3) Providing alternatives to water from the aircraft water system, such as bottled water for drinking and coffee or tea preparation; antiseptic hand gels or wipes in accordance with 21 CFR part 333—''Topical Anti-microbial Drug Products for Over-the-Counter Human Use'' in the galleys and lavatories; and other feasible measures that reduce or eliminate the need to use the aircraft water system during the limited period before public use of the aircraft water system is unrestricted.

(e) *Post disinfection and flushing follow-up sampling*. Following corrective action disinfection and flushing, air carriers must comply with post disinfection and flushing follow-up sampling procedures that, at a minimum, consist of the following:

(1) For each aircraft water system, the air carrier must collect a complete set of total coliform follow-up samples consisting of two 100 mL total coliform samples at the same routine sample locations as identified in paragraphs (b)(2) and (b)(4) of this section.

(2) Follow-up samples must be collected prior to providing water to the public for human consumption from the aircraft water system.

(3) If a complete set of follow-up samples is total coliform-negative, the air carrier must return to the routine monitoring frequency for total coliform as specified in the sampling plan required by § 141.802.

(4) If any follow-up sample is *E. coli*-positive, the air carrier must perform all the corrective actions as specified

in paragraphs (c)(2)(i), (c)(2)(ii), and (c)(2)(iii) of this section.

(5) If any follow-up sample is total coliform-positive and *E. coli*-negative the air carrier must restrict public access to the aircraft water system in accordance with paragraph (d) of this section as expeditiously as possible, but in no case later than 72 hours after the laboratory notifies the air carrier of the total coliform-positive and *E. coli*-negative result. All public access restrictions, including applicable public notification requirements, must remain in-place until the aircraft water system has been disinfected and flushed in accordance with §141.804(b)(2) and a complete set of follow-up samples is total coliform-negative. The air carrier must collect follow-up samples in accordance with paragraph (e) of this section. A complete set of follow-up sample results must be total coliform-negative before the air carrier provides water for human consumption from the aircraft water system and returns to the routine monitoring frequency for coliform as specified in §141.802.

(f) *Failure to perform required routine disinfection and flushing or failure to collect required routine samples.* If the air carrier fails to perform routine disinfection and flushing or fails to collect and analyze the required number of routine coliform samples, the air carrier must perform all the corrective actions as specified in paragraph (c)(3)(ii) of this section.

(g) *Failure to collect repeat or follow-up samples.* If the air carrier fails to collect and analyze the required follow-up samples as a result of an *E. coli*-positive result, then the air carrier must perform all the corrective actions as specified in paragraphs (c)(2)(i), (c)(2)(ii), and (c)(2)(iii) of this section. If the air carrier fails to collect and analyze the required repeat samples or follow-up samples as a result of a total coliform-positive and *E. coli*-negative result, then the air carrier must perform all the corrective actions as specified in paragraph (c)(3)(ii) of this section.

(h) *Failure to board water from a safe watering point (E. coli-positive).* For the aircraft water system, the air carrier must perform all the corrective actions specified in paragraphs (c)(2)(i), (c)(2)(ii), and (c)(2)(iii) of this section when it becomes aware of an *E. coli*-positive event resulting from:

(1) Boarding water from a watering point not in accordance with FDA regulations (21 CFR part 1240 subpart E), or

(2) Boarding water that does not meet NPDWRs applicable to transient non-community water systems (§§141.62 and 141.63, as applied to TNCWS),

(3) Boarding water that is otherwise determined to be unsafe due to noncompliance with the procedures specified in §141.804(b)(6).

(i) *Failure to board water from a safe watering point (non-E. coli-positive).* For the aircraft water system, the air carrier must perform all the corrective actions specified in paragraphs (c)(3)(ii) of this section when it becomes aware of a non-*E. coli*-positive event resulting from:

(1) Boarding water from a watering point not in accordance with FDA regulations (21 CFR part 1240, subpart E),

(2) Boarding water that does not meet NPDWRs applicable to transient non-community water systems (§§141.62 and 141.63, as applied to TNCWS), or

(3) Boarding water that is otherwise determined to be unsafe due to noncompliance with the procedures specified in §141.804(b)(6).

[74 FR 53618, Oct. 19, 2009, as amended at 78 FR 10354, Feb. 13, 2013]

§141.804 Aircraft water system operations and maintenance plan.

(a) Each air carrier must develop and implement an aircraft water system operations and maintenance plan for each aircraft water system that it owns or operates. This plan must be included in a Federal Aviation Administration (FAA)-accepted air carrier operations and maintenance program (14 CFR part 43, 14 CFR part 91, 14 CFR part 121).

(b) Each aircraft water system operations and maintenance plan must include the following:

(1) *Watering point selection requirement.* All watering points must be selected in accordance with Food and Drug Administration (FDA) regulations (21 CFR part 1240, subpart E).

(2) *Procedures for disinfection and flushing*. The plan must include the following requirements for procedures for disinfection and flushing of aircraft water system.

(i) The air carrier must conduct disinfection and flushing of the aircraft water system in accordance with, or is consistent with, the water system manufacturer's recommendations. The air carrier may conduct disinfection and flushing more frequently, but not less frequently, than the manufacturer recommends.

(ii) The operations and maintenance plan must identify the disinfection frequency, type of disinfecting agent, disinfectant concentration to be used, and the disinfectant contact time, and flushing volume or flushing time.

(iii) In cases where a recommended routine disinfection and flushing frequency is not specified by the aircraft water system manufacturer, the air carrier must choose a disinfection and flushing, and corresponding monitoring frequency specified in § 141.803(b)(3).

(3) *Follow-up sampling*. The plan must include the procedures for follow-up sampling in accordance with § 141.803(e).

(4) *Training requirements*. Training for all personnel involved with the aircraft water system operation and maintenance provisions of this regulation must include, but is not limited to the following:

(i) Boarding water procedures;

(ii) Sample collection procedures;

(iii) Disinfection and flushing procedures;

(iv) Public health and safety reasons for the requirements of this subpart.

(5) *Procedures for conducting self-inspections of the aircraft water system*. Procedures must include, but are not limited to, inspection of storage tank, distribution system, supplemental treatment, fixtures, valves, and backflow prevention devices.

(6) *Procedures for boarding water*. The plan must include the following requirements and procedures for boarding water:

(i) Within the United States, the air carrier must board water from watering points in accordance with Food and Drug Administration (FDA) regulations (21 CFR part 1240, subpart E).

(ii) A description of how the water will be transferred from the watering point to the aircraft in a manner that ensures it will not become contaminated during the transfer.

(iii) A description of how the carrier will ensure that water boarded outside the United States is safe for human consumption.

(iv) A description of emergency procedures that meet the requirements in § 141.803(h) and (i) that must be used in the event that the air carrier becomes aware that water was boarded to operate essential systems, such as toilets, but was boarded from a watering point not in accordance with FDA regulations, does not meet NPDWRs applicable to transient non-community water systems (§§ 141.62 and 141.63, as applied to TNCWSs), or is otherwise unsafe.

(7) *Coliform sampling plan*. The air carrier must include the coliform sampling plan prepared in accordance with § 141.802.

(8) *Aircraft water system disconnect/shut-off, or prevent flow of water through the tap(s) statement*. An explanation of whether the aircraft water system can be physically disconnected/shut-off, or the flow of water otherwise prevented through the tap(s) to the crew and passengers.

(c) For existing aircraft, the air carrier must develop the water system operations and maintenance plan required by this section by April 19, 2011;

(d) For new aircraft, the air carrier must develop the operations and maintenance plan required in this section within the first calendar quarter of initial operation of the aircraft.

(e) Any changes to the aircraft water system operations and maintenance plan must be included in the FAA-accepted air carrier operations and maintenance program.

§ 141.805 Notification to passengers and crew.

(a) Air carriers must give public notice for each aircraft in all of the following situations:

(1) Public access to the aircraft water system is restricted in response to a routine, repeat or follow-up total coliform-positive or *E. coli*-positive sample result in accordance with § 141.803(d);

(2) Failure to perform required routine disinfection and flushing or failure to collect required routine samples in accordance with § 141.803(f);

(3) Failure to collect the required follow-up samples in response to a sample result that is *E. coli*-positive in accordance with § 141.803(g);

(4) Failure to collect the required repeat samples or failure to collect the required follow-up samples in response to a sample result that is total coliform-positive and *E. coli*-negative in accordance with § 141.803(g);

(5) In accordance with § 141.803(h), the air carrier becomes aware of an *E. coli*-positive event resulting from water that has been boarded from a watering point not in accordance with FDA regulations (21 CFR part 1240, subpart E), or that does not meet NPDWRs applicable to transient non-community water systems, or that is otherwise determined to be unsafe due to non-compliance with the procedures specified in § 141.804(b)(6);

(6) In accordance with § 141.803(i), the air carrier becomes aware of a non-*E. coli*-positive event resulting from water that has been boarded from a watering point not in accordance with FDA regulations (21 CFR part 1240, subpart E), or that does not meet NPDWRs applicable to transient non-community water systems, or that is otherwise determined to be unsafe due to non-compliance with the procedures specified in § 141.804(b)(6).

(7) The Administrator, the carrier, or the crew otherwise determines that notification is necessary to protect public health.

(b) *Public notification:* (1) Must be displayed in a conspicuous way when printed or posted;

(2) Must not contain overly technical language or very small print;

(3) Must not be formatted in a way that defeats the purpose of the notice;

(4) Must not contain language that nullifies the purpose of the notice;

(5) Must contain information in the appropriate language(s) regarding the importance of the notice, reflecting a good faith effort to reach the non-English speaking population served, including, where applicable, an easily recognized symbol for non-potable water.

(c) Public notification for paragraph (a)(1) of this section must meet the requirements of paragraph (b) of this section in addition to the following:

(1) Public notification must include a prominently displayed, clear statement in each lavatory indicating that the water is non-potable and should not be used for drinking, food or beverage preparation, hand washing, teeth brushing, or any other consumptive use; and

(2) A prominent notice in the galley directed at the crew which includes:

(i) A clear statement that the water is non-potable and should not be used for drinking, food or beverage preparation, hand washing, teeth brushing, or any other consumptive use;

(ii) A description of the violation or situation triggering the notice, including the contaminant(s) of concern;

(iii) When the violation or situation occurred;

(iv) Any potential adverse health effects from the violation or situation, as appropriate, under paragraph (g) of this section;

(v) The population at risk, including sensitive subpopulations particularly vulnerable if exposed to the contaminant in the drinking water;

(vi) What the air carrier is doing to correct the violation or situation; and

(vii) When the air carrier expects to return the system to unrestricted public access.

(3) If passenger access to the water system is physically prevented through disconnecting or shutting off the water, or the flow of water prevented through the tap(s), or if water is supplied only to lavatory toilets, and not to any lavatory or galley taps, then only the notice specified in paragraph (c)(2) of this section is required.

(4) Air carriers must initiate public notification when restriction of public access is initiated in accordance with § 141.803(d) and must continue until the aircraft water system is returned to unrestricted public access.

(d) Public notification for paragraphs (a)(2), (a)(4), and (a)(6) of this section must meet the requirements of paragraph (b) of this section in addition to the following:

(1) Public notification must include a prominently displayed, clear statement

in each lavatory indicating that the water is non-potable and should not be used for drinking, food or beverage preparation, hand washing, teeth brushing, or any other consumptive use; and

(2) A prominent notice in the galley directed at the crew which includes:

(i) A clear statement that the water is non-potable and should not be used for drinking, food or beverage preparation, hand washing, teeth brushing, or any other consumptive use;

(ii) A clear statement that it is not known whether the water is contaminated because there was a failure to perform required routine disinfection and flushing; or a failure to perform required monitoring; or water was boarded from a watering point not in accordance with FDA regulations, or that does not meet NPDWRs applicable to transient noncommunity water systems, or that is otherwise determined to be unsafe due to noncompliance with the procedures specified in §141.804(b)(6);

(iii) When and where the unsafe water was boarded or when the specific monitoring or disinfection and flushing requirement was not met;

(iv) Any potential adverse health effects from exposure to waterborne pathogens that might be in the water, as appropriate, under paragraph (g) of this section;

(v) The population at risk, including sensitive subpopulations particularly vulnerable if exposed to the contaminant in the drinking water; and

(vi) A statement indicating when the system will be disinfected and flushed and returned to unrestricted public access.

(3) If passenger access to the water system is physically prevented through disconnecting or shutting off the water, or the flow of water prevented through the tap(s), or if water is supplied only to lavatory toilets, and not to any lavatory or galley taps, then only the notice specified in paragraph (d)(2) of this section is required.

(4) Air carriers must initiate public notification when restriction of public access is initiated in accordance with §141.803(d) and must continue until the aircraft water system is returned to unrestricted public access.

(e) Public notification for paragraphs (a)(3) and (a)(5) of this section must meet the requirements of paragraph (b) of this section in addition to the following:

(1) Public notification must include a prominently displayed, clear statement in each lavatory indicating that the water is non-potable and should not be used for drinking, food or beverage preparation, hand washing, teeth brushing, or any other consumptive use; and

(2) A prominent notice in the galley directed at the crew which includes:

(i) A clear statement that the water is non-potable and should not be used for drinking, food or beverage preparation, hand washing, teeth brushing, or any other consumptive use;

(ii) A clear statement that the water is contaminated and there was a failure to conduct required monitoring; or a clear statement that water is contaminated because water was boarded from a watering point not in accordance with FDA regulations, or that does not meet NPDWRs applicable to transient noncommunity water systems, or that is otherwise determined to be unsafe due to noncompliance with the procedures specified in §141.804(b)(6);

(iii) A description of the contaminant(s) of concern;

(iv) When and where the unsafe water was boarded or when the specific monitoring requirement was not met;

(v) Any potential adverse health effects from the situation, as appropriate, under paragraph (g) of this section;

(vi) The population at risk, including sensitive subpopulations particularly vulnerable if exposed to the contaminant in the drinking water;

(vii) A statement indicating what the air carrier is doing to correct the situation; and

(viii) When the air carrier expects to return the system to unrestricted public access.

(3) If passenger access to the water system is physically prevented through disconnecting or shutting off the water, or the flow of water prevented through the tap(s), or if water is supplied only to lavatory toilets, and not to any lavatory or galley taps, then

only the notice specified in paragraph (e)(2) of this section is required.

(4) Air carriers must initiate public notification when restriction of public access is initiated in accordance with § 141.803(d) and must continue public notification until a complete set of required follow-up samples are total coliform-negative.

(f) Public notification for paragraph (a)(7) of this section must meet the requirements of paragraph (b) of this section in addition to the following:

(1) Notification must be in a form and manner reasonably calculated to reach all passengers and crew while on board the aircraft by using one or more of the following forms of delivery:

(i) Broadcast over public announcement system on aircraft;

(ii) Posting of the notice in conspicuous locations throughout the area served by the water system. These locations would normally be the galleys and in the lavatories of each aircraft requiring posting;

(iii) Hand delivery of the notice to passengers and crew;

(iv) Another delivery method approved in writing by the Administrator.

(2) Air carriers must initiate public notification within 24 hours of being informed by EPA to perform notification and must continue notification for the duration determined by EPA.

(g) In each public notice to the crew, air carriers must use the following standard health effects language that corresponds to the situations in paragraphs (a)(1) through (a)(6) of this section.

(1) Health effects language to be used when public notice is initiated due to the detection of total coliforms only (not *E. coli*) in accordance with paragraph (a)(1) of this section:

Coliform are bacteria that are naturally present in the environment and are used as an indicator that other, potentially harmful, bacteria may be present. Coliforms were found in [INSERT NUMBER OF SAMPLES DETECTED] samples collected and this is a warning of potential problems. If human pathogens are present, they can cause short-term health effects, such as diarrhea, cramps, nausea, headaches, or other symptoms. They may pose a special health risk for infants, young children, some of the elderly, and people with severely compromised immune systems.

(2) Health effects language to be used when public notice is initiated due to any *E. coli*-positive routine, repeat, or follow-up sample in accordance with paragraph (a)(1) of this section:

E. coli are bacteria whose presence indicates that the water may be contaminated with human or animal wastes. Microbes in these wastes can cause short-term health effects, such as diarrhea, cramps, nausea, headaches, or other symptoms. They may pose a special health risk for infants, young children, some of the elderly, and people with severely compromised immune systems.

(3) Health effects language to be used when public notice is initiated due to a failure to conduct routine monitoring or routine disinfection and flushing in accordance with paragraph (a)(2) of this section; or when there is a failure to conduct repeat or follow-up sampling in accordance with paragraph (a)(4) of this section; or in accordance with paragraph (a)(6) of this section, when the air carrier becomes aware of a non-*E. coli*-positive event that is the result of water that was boarded from a watering point not in accordance with FDA regulations (21 CFR part 1240, subpart E), or that does not meet NPDWRs applicable to transient noncommunity water systems, or that is otherwise determined to be unsafe due to non-compliance with the procedures specified in § 141.804(b)(6):

Because [REQUIRED MONITORING AND ANALYSIS WAS NOT CONDUCTED], [REQUIRED DISINFECTION AND FLUSHING WAS NOT CONDUCTED] [WATER WAS BOARDED FROM A WATERING POINT NOT IN ACCORDANCE WITH FDA REGULATIONS (21 CR 1240 SUBPART E)], or [OTHER APPROPRIATE EXPLANATION], we cannot be sure of the quality of the drinking water at this time. However, drinking water contaminated with human pathogens can cause short-term health effects, such as diarrhea, cramps, nausea, headaches, or other symptoms. They may pose a special health risk for infants, young children, some of the elderly, and people with severely compromised immune systems.

(4) Health effects language to be used when public notice is initiated due to a failure to conduct required follow-up

monitoring in response to a sample result that is *E. coli*-positive in accordance with paragraph (a)(3) of this section; or in accordance with paragraph (a)(5) of this section, when the air carrier becomes aware of an *E. coli*-positive event that is the result of water that was boarded from a watering point not in accordance with FDA regulations (21 CFR part 1240, subpart E), or that does not meet NPDWRs applicable to transient non-community water systems, or that is otherwise determined to be unsafe due to non-compliance with the procedures specified in § 141.804(b)(6):

Because required follow-up monitoring and analysis was not conducted after the aircraft water system tested positive for *E. coli,* we cannot be sure of the quality of the drinking water at this time. *E. coli* are bacteria whose presence indicates that the water may be contaminated with human or animal wastes. Microbes in these wastes can cause short-term health effects, such as diarrhea, cramps, nausea, headaches, or other symptoms. They may pose a special health risk for infants, young children, some of the elderly, and people with severely compromised immune systems.

OR

Water was boarded that is contaminated with *E. coli* because [WATER WAS BOARDED FROM A WATERING POINT NOT IN ACCORDANCE WITH FDA REGULATIONS (21 CR 1240 SUBPART E)], or [OTHER APPROPRIATE EXPLANATION]. *E. coli* are bacteria whose presence indicates that the water may be contaminated with human or animal wastes. Microbes in these wastes can cause short-term health effects, such as diarrhea, cramps, nausea, headaches, or other symptoms. They may pose a special health risk for infants, young children, some of the elderly, and people with severely compromised immune systems.

§ 141.806 Reporting requirements.

(a) The air carrier must comply with the following requirements regarding reporting of the development of the coliform sampling plan, the operations and maintenance plan, and the disinfection and flushing and coliform sampling frequencies.

(1) The air carrier must report to the Administrator that it has developed the coliform sampling plan required by § 141.802, which covers each existing aircraft water system, as well as report the frequency for routine coliform sampling identified in the coliform sampling plan by April 19, 2011. The air carrier must report to the Administrator that it has developed its operations and maintenance plan required by § 141.804 and report the frequency for routine disinfection and flushing by April 19, 2011;

(2) For each new aircraft meeting the definition of an aircraft water system, which becomes operational after publication of this subpart, the air carrier must report to the Administrator that it has developed the coliform sampling plan required by § 141.802, as well as report the frequency for routine coliform sampling identified in the coliform sampling plan, within the first calendar quarter of initial operation of the aircraft. The air carrier must report to the Administrator that it has developed the aircraft water system operations and maintenance plan required by § 141.804, and report the frequency for routine disinfection and flushing within the first calendar quarter of initial operation of the aircraft.

(b) The air carrier must report the following information to the Administrator:

(1) A complete inventory of aircraft that are public water systems by April 19, 2011. Inventory information includes, at a minimum, the following:

(i) The unique aircraft identifier number;

(ii) The status (active or inactive) of any aircraft as an aircraft water system as defined in § 141.801;

(iii) The type and location of any supplemental treatment equipment installed on the water system; and

(iv) Whether the aircraft water system can be physically disconnected or shut-off, or the flow of water prevented through the tap(s).

(2) Changes in aircraft inventory no later than 10 days following the calendar month in which the change occurred. Changes in inventory information include, at a minimum, the following:

(i) Change in the unique identifier number for any new aircraft, or any aircraft removed from the carrier's fleet;

(ii) Change in status (active or inactive) of any aircraft as an aircraft water system as defined in § 141.801; and

(iii) Change to the type and location of any supplemental treatment equipment added to or removed from the water system.

(iv) Change to whether the aircraft water system can be physically disconnected or shut-off, or the flow of water prevented through the tap(s).

(3) All sampling results no later than 10 calendar days following the monitoring period in which the sampling occurred. The monitoring period is based on the monitoring frequency identified in the coliform sampling plan required under §141.802. Routine disinfection and flushing events must be reported no later than 10 calendar days following the disinfection and flushing period in which the disinfection and flushing occurred. The disinfection and flushing period is based on the frequency identified in the operations and maintenance plan required under §141.804.

(4) All events requiring notification to passengers or crew, or non-routine disinfection and flushing, or non-routine sampling, within 10 days of the event (e.g., notification of positive sample result by laboratory), including information on whether required notification was provided to passengers or crew or both.

(5) Failure to comply with the monitoring or disinfection and flushing requirements of this subpart within 10 calendar days of discovery of the failure.

(6) Changes in disinfection and flushing and coliform sampling frequencies no later than 10 days following the calendar month in which the change occurred. Changes to an aircraft's routine coliform sampling frequency and routine disinfection and flushing frequency must be included in the aircraft water system operation and maintenance plan that is included in the air carrier operations and maintenance program accepted by FAA in accordance with §141.804.

(c) The air carrier must provide evidence of a self-inspection to the Administrator within 90 days of completion of the self-inspection required under §141.808(b), including reporting whether all deficiencies were addressed in accordance with §141.808(c). The air carrier must also report to the Administrator within 90 days that any deficiency identified during a compliance audit conducted in accordance with §141.808(a) has been addressed. If any deficiency has not been addressed within 90 days of identification of the deficiency, the report must also include a description of the deficiency, an explanation as to why it has not yet been addressed, and a schedule for addressing it as expeditiously as possible.

(d) All information required to be reported to the Administrator under this subpart must be in an electronic format established or approved by the Administrator. If an air carrier is unable to report electronically, the air carrier may use an alternative approach that the Administrator approves.

§ 141.807 Recordkeeping requirements.

(a) The air carrier must keep records of bacteriological analyses for at least 5 years and must include the following information:

(1) The date, time, and place of sampling, and the name of the person who collected the sample;

(2) Identification of the sample as a routine, repeat, follow-up, or other special purpose sample;

(3) Date of the analysis;

(4) Laboratory and person responsible for performing the analysis;

(5) The analytical technique/method used; and

(6) The results of the analysis.

(b) The air carrier must keep records of any disinfection and flushing for at least 5 years and must include the following information:

(1) The date and time of the disinfection and flushing; and

(2) The type of disinfection and flushing (*i.e.*, routine or corrective action).

(c) The air carrier must keep records of a self-inspection for at least 10 years and must include the following information:

(1) The completion date of the self-inspection; and

(2) Copies of any written reports, summaries, or communications related to the self-inspection.

(d) The air carrier must maintain sampling plans and make such plans available for review by the Administrator upon request, including during compliance audits.

(e) The air carrier must maintain aircraft water system operations and maintenance plans in accordance with FAA requirements, and make such plans available for review by the Administrator upon request, including during compliance audits.

(f) The air carrier must keep copies of public notices to passengers and crew issued as required by this subpart for at least 3 years after issuance.

§ 141.808 Audits and inspections.

(a) The Administrator may conduct routine compliance audits as deemed necessary in providing regulatory oversight to ensure proper implementation of the requirements in this subpart. Compliance audits may include, but are not limited to:

(1) Bacteriological sampling of aircraft water system;

(2) Reviews and audits of records as they pertain to water system operations and maintenance such as log entries, disinfection and flushing procedures, and sampling results; and

(3) Observation of procedures involving the handling of finished water, watering point selection, boarding of water, operation, disinfection and flushing, and general maintenance and self-inspections of aircraft water system.

(b) Air carriers or their representatives must perform a self-inspection of all water system components for each aircraft water system no less frequently than once every 5 years.

(c) The air carrier must address any deficiency identified during compliance audits or routine self-inspections within 90 days of identification of the deficiency, or where such deficiency is identified during extended or heavy maintenance, before the aircraft is put back into service. This includes any deficiency in the water system's design, construction, operation, maintenance, or administration, as well as any failure or malfunction of any system component that has the potential to cause an unacceptable risk to health or that could affect the reliable delivery of safe drinking water.

§ 141.809 Supplemental treatment.

(a) Any supplemental drinking water treatment units installed onboard existing or new aircraft must be acceptable to FAA and FDA; and must be installed, operated, and maintained in accordance with the manufacturer's plans and specifications and FAA requirements.

(b) Water supplemental treatment and production equipment must produce water that meets the standards prescribed in this part.

§ 141.810 Violations.

An air carrier is in violation of this subpart when, for any aircraft water system it owns or operates, any of the following occur:

(a) It fails to perform any of the requirements in accordance with § 141.803 or § 141.804.

(b) It has an *E. coli*-positive sample in any monitoring period (routine and repeat samples are used in this determination).

(c) It fails to provide notification to passengers and crew in accordance with § 141.805.

(d) It fails to comply with the reporting and recordkeeping requirements of this subpart.

(e) It fails to conduct a self-inspection or address a deficiency in accordance with § 141.808.

(f) It fails to develop a coliform sampling plan in accordance with § 141.802, or fails to have and follow an operations and maintenance plan, which is included in a FAA accepted program in accordance with § 141.804.

Subpart Y—Revised Total Coliform Rule

SOURCE: 78 FR 10354, Feb. 13, 2013, unless otherwise noted.

§ 141.851 General.

(a) *General*. The provisions of this subpart include both maximum contaminant level and treatment technique requirements.

(b) *Applicability*. The provisions of this subpart apply to all public water systems.

(c) *Compliance date*. Systems must comply with the provisions of this subpart beginning April 1, 2016, unless otherwise specified in this subpart.

(d) *Implementation with EPA as State*. Systems falling under direct oversight

of EPA, where EPA acts as the State, must comply with decisions made by EPA for implementation of subpart Y. EPA has authority to establish such procedures and criteria as are necessary to implement subpart Y.

(e) *Violations of national primary drinking water regulations.* Failure to comply with the applicable requirements of §§ 141.851 through 141.861, including requirements established by the State pursuant to these provisions, is a violation of the national primary drinking water regulations under subpart Y.

§ 141.852 Analytical methods and laboratory certification.

(a) *Analytical methodology.* (1) The standard sample volume required for analysis, regardless of analytical method used, is 100 ml.

(2) Systems need only determine the presence or absence of total coliforms and *E. coli;* a determination of density is not required.

(3) The time from sample collection to initiation of test medium incubation may not exceed 30 hours. Systems are encouraged but not required to hold samples below 10 deg. C during transit.

(4) If water having residual chlorine (measured as free, combined, or total chlorine) is to be analyzed, sufficient sodium thiosulfate ($Na_2S_2O_3$) must be added to the sample bottle before sterilization to neutralize any residual chlorine in the water sample. Dechlorination procedures are addressed in Section 9060A.2 of *Standard Methods for the Examination of Water and Wastewater* (20th and 21st editions).

(5) Systems must conduct total coliform and *E. coli* analyses in accordance with one of the analytical methods in the following table or one of the alternative methods listed in Appendix A to subpart C of part 141.

Organism	Methodology category	Method [1]	Citation [1]
Total Coliforms	Lactose Fermentation Methods	Standard Total Coliform Fermentation Technique.	Standard Methods 9221 B.1, B.2 (20th ed.; 21st ed.).[2 3]
			Standard Methods Online 9221 B.1, B.2–99.[2 3]
		Presence-Absence (P–A) Coliform Test	Standard Methods 9221 D.1, D.2 (20th ed.; 21st ed.).[2 7]
			Standard Methods Online 9221 D.1, D.2–99.[2 7]
	Membrane Filtration Methods	Standard Total Coliform Membrane Filter Procedure.	Standard Methods 9222 B, C (20th ed.; 21st ed.).[2 4]
			Standard Methods Online 9222 B–97[2 4], 9222 C–97.[2 4]
		Membrane Filtration using MI medium	EPA Method 1604.[2]
		m-ColiBlue24® Test[2 4].	
		Chromocult[2 4].	
	Enzyme Substrate Methods	Colilert®	Standard Methods 9223 B (20th ed.; 21st ed.).[2 5]
			Standard Methods Online 9223 B–97.[2 5]
		Colisure®	Standard Methods 9223 B (20th ed.; 21st ed.).[2 5 6]
			Standard Methods Online 9223 B–97.[2 5 6]
		E*Colite® Test[2].	
		Readycult® Test[2].	
		modified Colitag® Test[2].	
Escherichia coli.	*Escherichia coli* Procedure (following Lactose Fermentation Methods).	EC–MUG medium	Standard Methods 9221 F.1 (20th ed.; 21st ed.)[2]
	Escherichia coli Partition Method	EC broth with MUG (EC–MUG)	Standard Methods 9222 G.1*c*(2) (20th ed.; 21st ed.)[2 8]
		NA–MUG medium	Standard Methods 9222 G.1*c*(1) (20th ed.; 21st ed.)[2]
	Membrane Filtration Methods	Membrane Filtration using MI medium	EPA Method 1604[2]
		m-ColiBlue24® Test[2 4]	
		Chromocult[2 4].	
	Enzyme Substrate Methods	Colilert®	Standard Methods 9223 B (20th ed.; 21st ed.)[2 5]
			Standard Methods Online 9223 B–97[2 5 6]
		Colisure®	Standard Methods 9223 B (20th ed.; 21st ed.)[2 5 6]
			Standard Methods Online 9223 B–97[2 5 6]
		E*Colite® Test[2].	
		Readycult® Test[2].	
		modified Colitag® Test[2].	

[1] The procedures must be done in accordance with the documents listed in paragraph (c) of this section. For Standard Methods, either editions, 20th (1998) or 21st (2005), may be used. For the Standard Methods Online, the year in which each method was approved by the Standard Methods Committee is designated by the last two digits following the hyphen in the method number. The methods listed are the only online versions that may be used. For vendor methods, the date of the method listed in paragraph (c) of this section is the date/version of the approved method. The methods listed are the only versions that may be used for compliance with this rule. Laboratories should be careful to use only the approved versions of the methods, as product package inserts may not be the same as the approved versions of the methods.

[2] Incorporated by reference. See paragraph (c) of this section.

[3] Lactose broth, as commercially available, may be used in lieu of lauryl tryptose broth, if the system conducts at least 25 parallel tests between lactose broth and lauryl tryptose broth using the water normally tested, and if the findings from this comparison demonstrate that the false-positive rate and false-negative rate for total coliforms, using lactose broth, is less than 10 percent.

[4] All filtration series must begin with membrane filtration equipment that has been sterilized by autoclaving. Exposure of filtration equipment to UV light is not adequate to ensure sterilization. Subsequent to the initial autoclaving, exposure of the filtration equipment to UV light may be used to sanitize the funnels between filtrations within a filtration series. Alternatively, membrane filtration equipment that is pre-sterilized by the manufacturer (*i.e.*, disposable funnel units) may be used.

[5] Multiple-tube and multi-well enumerative formats for this method are approved for use in presence-absence determination under this regulation.

[6] Colisure® results may be read after an incubation time of 24 hours.

[7] A multiple tube enumerative format, as described in *Standard Methods for the Examination of Water and Wastewater* 9221, is approved for this method for use in presence-absence determination under this regulation.

[8] The following changes must be made to the EC broth with MUG (EC–MUG) formulation: Potassium dihydrogen phosphate, KH_2PO_4, must be 1.5g, and 4-methylumbelliferyl-Beta-D-glucuronide must be 0.05 g.

(b) *Laboratory certification*. Systems must have all compliance samples required under this subpart analyzed by a laboratory certified by the EPA or a primacy State to analyze drinking water samples. The laboratory used by the system must be certified for each method (and associated contaminant(s)) used for compliance monitoring analyses under this rule.

(c) *Incorporation by reference*. The standards required in this section are incorporated by reference into this section with the approval of the Director of the Federal Register under 5 U.S.C. 552(a) and 1 CFR part 51. To enforce any edition other than that specified in this section, EPA must publish notice of change in the FEDERAL REGISTER and the material must be available to the public. All approved material is available for inspection either electronically at *www.regulations.gov*, in hard copy at the Water Docket, or from the sources indicated below. The Docket ID is EPA–HQ–OW–2008–0878. Hard copies of these documents may be viewed at the Water Docket in the EPA Docket Center, (EPA/DC) EPA West, Room 3334, 1301 Constitution Ave. NW., Washington, DC. The EPA Docket Center Public Reading Room is open from 8:30 a.m. to 4:30 p.m., Monday through Friday, excluding legal holidays. The telephone number for the Public Reading Room is 1–202–566–1744, and the telephone number for the Water Docket is 1–202–566–2426. Copyrighted materials are only available for viewing in hard copy. These documents are also available for inspection at the National Archives and Records Administration (NARA). For information on the availability of this material at NARA, call 1–202–741–6030 or go to: *http://www.archives.gov/federal_register/code_of_federal_regulations/ibr_locations.html*.

(1) American Public Health Association, 800 I Street, NW., Washington, DC 20001.

(i) ''Standard Methods for the Examination of Water and Wastewater,'' 20th edition (1998):

(A) Standard Methods 9221, ''Multiple-Tube Fermentation Technique for Members of the Coliform Group,'' B.1, B.2, ''Standard Total Coliform Fermentation Technique.''

(B) Standard Methods 9221, ''Multiple-Tube Fermentation Technique for Members of the Coliform Group,'' D.1, D.2, ''Presence-Absence (P–A) Coliform Test.''

(C) Standard Methods 9222, ''Membrane Filter Technique for Members of the Coliform Group,'' B, ''Standard Total Coliform Membrane Filter Procedure.''

(D) Standard Methods 9222, ''Membrane Filter Technique for Members of the Coliform Group,'' C, ''Delayed-Incubation Total Coliform Procedure.''

(E) Standard Methods 9223, ''Enzyme Substrate Coliform Test,'' B, ''Enzyme Substrate Test,'' Colilert® and Colisure®.

(F) Standard Methods 9221, ''Multiple Tube Fermentation Technique for Members of the Coliform Group,'' F.1, ''*Escherichia coli* Procedure: EC–MUG medium.''

(G) Standard Methods 9222, ''Membrane Filter Technique for Members of the Coliform Group,'' G.1.*c*(2), ''*Escherichia coli* Partition Method: EC broth with MUG (EC–MUG).''

(H) Standard Methods 9222, ''Membrane Filter Technique for Members of the Coliform Group,'' G.1.*c*(1), ''*Escherichia coli* Partition Method: NA–MUG medium.''

(ii) ''Standard Methods for the Examination of Water and Wastewater,'' 21st edition (2005):

(A) Standard Methods 9221, ''Multiple-Tube Fermentation Technique for Members of the Coliform Group,'' B.1, B.2, ''Standard Total Coliform Fermentation Technique.''

(B) Standard Methods 9221, ''Multiple-Tube Fermentation Technique for Members of the Coliform Group,'' D.1, D.2, ''Presence-Absence (P–A) Coliform Test.''

(C) Standard Methods 9222, ''Membrane Filter Technique for Members of the Coliform Group,'' B, ''Standard Total Coliform Membrane Filter Procedure.''

(D) Standard Methods 9222, ''Membrane Filter Technique for Members of the Coliform Group,'' C, ''Delayed-Incubation Total Coliform Procedure.''

(E) Standard Methods 9223, ''Enzyme Substrate Coliform Test,'' B, ''Enzyme Substrate Test,'' Colilert® and Colisure®.

(F) Standard Methods 9221, ''Multiple Tube Fermentation Technique for Members of the Coliform Group,'' F.1, ''*Escherichia coli* Procedure: EC–MUG medium.''

(G) Standard Methods 9222, ''Membrane Filter Technique for Members of the Coliform Group,'' G.1.*c*(2), ''*Escherichia coli* Partition Method: EC broth with MUG (EC–MUG).''

(H) Standard Methods 9222, ''Membrane Filter Technique for Members of the Coliform Group,'' G.1.*c*(1), ''*Escherichia coli* Partition Method: NA–MUG medium.''

(iii) ''Standard Methods Online'' available at *http://www.standardmethods.org:*

(A) Standard Methods Online 9221, ''Multiple-Tube Fermentation Technique for Members of the Coliform Group'' (1999), B.1, B.2–99, ''Standard Total Coliform Fermentation Technique.''

(B) Standard Methods Online 9221, ''Multiple-Tube Fermentation Technique for Members of the Coliform Group'' (1999), D.1, D.2–99, ''Presence-Absence (P–A) Coliform Test.''

(C) Standard Methods Online 9222, ''Membrane Filter Technique for Members of the Coliform Group'' (1997), B–97, ''Standard Total Coliform Membrane Filter Procedure.''

(D) Standard Methods Online 9222, ''Membrane Filter Technique for Members of the Coliform Group'' (1997), C–97, ''Delayed-Incubation Total Coliform Procedure.''

(E) Standard Methods Online 9223, ''Enzyme Substrate Coliform Test'' (1997), B–97, ''Enzyme Substrate Test'', Colilert® and Colisure®.

(2) Charm Sciences, Inc., 659 Andover Street, Lawrence, MA 01843–1032, telephone 1–800–343–2170:

(i) E*Colite®—''Charm E*Colite™ Presence/Absence Test for Detection and Identification of Coliform Bacteria and *Escherichia coli* in Drinking Water,'' January 9, 1998.

(ii) [Reserved]

(3) CPI International, Inc., 5580 Skylane Blvd., Santa Rosa, CA, 95403, telephone 1–800–878–7654:

(i) modified Colitag®, ATP D05–0035—''Modified Colitag™ Test Method for the Simultaneous Detection of *E. coli* and other Total Coliforms in Water,'' August 28, 2009.

(ii) [Reserved]

(4) EMD Millipore (a division of Merck KGaA, Darmstadt Germany), 290 Concord Road, Billerica, MA 01821, telephone 1–800–645–5476:

(i) Chromocult—''Chromocult® Coliform Agar Presence/Absence Membrane Filter Test Method for Detection and Identification of Coliform Bacteria and *Escherichia coli* for Finished Waters,'' November 2000, Version 1.0.

(ii) Readycult®—''Readycult® Coliforms 100 Presence/Absence Test for Detection and Identification of Coliform Bacteria and *Escherichia coli* in Finished Waters,'' January 2007, Version 1.1.

(5) EPA's Water Resource Center (MC–4100T), 1200 Pennsylvania Avenue NW., Washington, DC 20460, telephone 1–202–566–1729:

(i) EPA Method 1604, EPA 821–R–02–024—''EPA Method 1604: Total Coliforms and *Escherichia coli* in Water by Membrane Filtration Using a Simultaneous Detection Technique (MI Medium),'' September 2002, *http://www.epa.gov/nerlcwww/1604sp02.pdf*.

(ii) [Reserved]

(6) Hach Company, P.O. Box 389, Loveland, CO 80539, telephone 1–800–604–3493:

(i) m-ColiBlue24®—''Membrane Filtration Method m-ColiBlue24® Broth,'' Revision 2, August 17, 1999.

(ii) [Reserved]

[78 FR 10354, Feb. 13, 2013, as amended at 79 FR 10669, Feb. 26, 2014]

§ 141.853 General monitoring requirements for all public water systems.

(a) *Sample siting plans.* (1) Systems must develop a written sample siting plan that identifies sampling sites and a sample collection schedule that are representative of water throughout the distribution system not later than March 31, 2016. These plans are subject to State review and revision. Systems must collect total coliform samples according to the written sample siting plan. Monitoring required by §§ 141.854 through 141.858 may take place at a customer's premise, dedicated sampling station, or other designated compliance sampling location. Routine and repeat sample sites and any sampling

points necessary to meet the requirements of subpart S must be reflected in the sampling plan.

(2) Systems must collect samples at regular time intervals throughout the month, except that systems that use only ground water and serve 4,900 or fewer people may collect all required samples on a single day if they are taken from different sites.

(3) Systems must take at least the minimum number of required samples even if the system has had an *E. coli* MCL violation or has exceeded the coliform treatment technique triggers in §141.859(a).

(4) A system may conduct more compliance monitoring than is required by this subpart to investigate potential problems in the distribution system and use monitoring as a tool to assist in uncovering problems. A system may take more than the minimum number of required routine samples and must include the results in calculating whether the coliform treatment technique trigger in §141.859(a)(1)(i) and (ii) has been exceeded only if the samples are taken in accordance with the existing sample siting plan and are representative of water throughout the distribution system.

(5) Systems must identify repeat monitoring locations in the sample siting plan. Unless the provisions of paragraphs (a)(5)(i) or (a)(5)(ii) of this section are met, the system must collect at least one repeat sample from the sampling tap where the original total coliform-positive sample was taken, and at least one repeat sample at a tap within five service connections upstream and at least one repeat sample at a tap within five service connections downstream of the original sampling site. If a total coliform-positive sample is at the end of the distribution system, or one service connection away from the end of the distribution system, the system must still take all required repeat samples. However, the State may allow an alternative sampling location in lieu of the requirement to collect at least one repeat sample upstream or downstream of the original sampling site. Except as provided for in paragraph (a)(5)(ii) of this section, systems required to conduct triggered source water monitoring under §141.402(a) must take ground water source sample(s) in addition to repeat samples required under this subpart.

(i) Systems may propose repeat monitoring locations to the State that the system believes to be representative of a pathway for contamination of the distribution system. A system may elect to specify either alternative fixed locations or criteria for selecting repeat sampling sites on a situational basis in a standard operating procedure (SOP) in its sample siting plan. The system must design its SOP to focus the repeat samples at locations that best verify and determine the extent of potential contamination of the distribution system area based on specific situations. The State may modify the SOP or require alternative monitoring locations as needed.

(ii) Ground water systems serving 1,000 or fewer people may propose repeat sampling locations to the State that differentiate potential source water and distribution system contamination (e.g., by sampling at entry points to the distribution system). A ground water system with a single well required to conduct triggered source water monitoring may, with written State approval, take one of its repeat samples at the monitoring location required for triggered source water monitoring under §141.402(a) if the system demonstrates to the State's satisfaction that the sample siting plan remains representative of water quality in the distribution system. If approved by the State, the system may use that sample result to meet the monitoring requirements in both §141.402(a) and this section.

(A) If a repeat sample taken at the monitoring location required for triggered source water monitoring is *E. coli*-positive, the system has violated the *E. coli* MCL and must also comply with §141.402(a)(3). If a system takes more than one repeat sample at the monitoring location required for triggered source water monitoring, the system may reduce the number of additional source water samples required under §141.402(a)(3) by the number of repeat samples taken at that location that were not *E. coli*-positive.

(B) If a system takes more than one repeat sample at the monitoring location required for triggered source water monitoring under § 141.402(a), and more than one repeat sample is *E. coli*-positive, the system has violated the *E. coli* MCL and must also comply with § 141.403(a)(1).

(C) If all repeat samples taken at the monitoring location required for triggered source water monitoring are *E. coli*-negative and a repeat sample taken at a monitoring location other than the one required for triggered source water monitoring is *E. coli*-positive, the system has violated the *E. coli* MCL, but is not required to comply with § 141.402(a)(3).

(6) States may review, revise, and approve, as appropriate, repeat sampling proposed by systems under paragraphs (a)(5)(i) and (ii) of this section. The system must demonstrate that the sample siting plan remains representative of the water quality in the distribution system. The State may determine that monitoring at the entry point to the distribution system (especially for undisinfected ground water systems) is effective to differentiate between potential source water and distribution system problems.

(b) *Special purpose samples.* Special purpose samples, such as those taken to determine whether disinfection practices are sufficient following pipe placement, replacement, or repair, must not be used to determine whether the coliform treatment technique trigger has been exceeded. Repeat samples taken pursuant to § 141.858 are not considered special purpose samples, and must be used to determine whether the coliform treatment technique trigger has been exceeded.

(c) *Invalidation of total coliform samples.* A total coliform-positive sample invalidated under this paragraph (c) of this section does not count toward meeting the minimum monitoring requirements of this subpart.

(1) The State may invalidate a total coliform-positive sample only if the conditions of paragraph (c)(1)(i), (ii), or (iii) of this section are met.

(i) The laboratory establishes that improper sample analysis caused the total coliform-positive result.

(ii) The State, on the basis of the results of repeat samples collected as required under § 141.858(a), determines that the total coliform-positive sample resulted from a domestic or other non-distribution system plumbing problem. The State cannot invalidate a sample on the basis of repeat sample results unless all repeat sample(s) collected at the same tap as the original total coliform-positive sample are also total coliform-positive, and all repeat samples collected at a location other than the original tap are total coliform-negative (e.g., a State cannot invalidate a total coliform-positive sample on the basis of repeat samples if all the repeat samples are total coliform-negative, or if the system has only one service connection).

(iii) The State has substantial grounds to believe that a total coliform-positive result is due to a circumstance or condition that does not reflect water quality in the distribution system. In this case, the system must still collect all repeat samples required under § 141.858(a), and use them to determine whether a coliform treatment technique trigger in § 141.859 has been exceeded. To invalidate a total coliform-positive sample under this paragraph, the decision and supporting rationale must be documented in writing, and approved and signed by the supervisor of the State official who recommended the decision. The State must make this document available to EPA and the public. The written documentation must state the specific cause of the total coliform-positive sample, and what action the system has taken, or will take, to correct this problem. The State may not invalidate a total coliform-positive sample solely on the grounds that all repeat samples are total coliform-negative.

(2) A laboratory must invalidate a total coliform sample (unless total coliforms are detected) if the sample produces a turbid culture in the absence of gas production using an analytical method where gas formation is examined (e.g., the Multiple-Tube Fermentation Technique), produces a turbid culture in the absence of an acid reaction in the Presence-Absence (P–A) Coliform Test, or exhibits confluent

growth or produces colonies too numerous to count with an analytical method using a membrane filter (e.g., Membrane Filter Technique). If a laboratory invalidates a sample because of such interference, the system must collect another sample from the same location as the original sample within 24 hours of being notified of the interference problem, and have it analyzed for the presence of total coliforms. The system must continue to re-sample within 24 hours and have the samples analyzed until it obtains a valid result. The State may waive the 24-hour time limit on a case-by-case basis. Alternatively, the State may implement criteria for waiving the 24-hour sampling time limit to use in lieu of case-by-case extensions.

§ 141.854 Routine monitoring requirements for non-community water systems serving 1,000 or fewer people using only ground water.

(a) *General.* (1) The provisions of this section apply to non-community water systems using only ground water (except ground water under the direct influence of surface water, as defined in § 141.2) and serving 1,000 or fewer people.

(2) Following any total coliform-positive sample taken under the provisions of this section, systems must comply with the repeat monitoring requirements and *E. coli* analytical requirements in § 141.858.

(3) Once all monitoring required by this section and § 141.858 for a calendar month has been completed, systems must determine whether any coliform treatment technique triggers specified in § 141.859 have been exceeded. If any trigger has been exceeded, systems must complete assessments as required by § 141.859.

(4) For the purpose of determining eligibility for remaining on or qualifying for quarterly monitoring under the provisions of paragraphs (f)(4) and (g)(2), respectively, of this section for transient non-community water systems, the State may elect to not count monitoring violations under § 141.860(c)(1) of this part if the missed sample is collected no later than the end of the monitoring period following the monitoring period in which the sample was missed. The system must collect the make-up sample in a different week than the routine sample for that monitoring period and should collect the sample as soon as possible during the monitoring period. The State may not use this provision under paragraph (h) of this section. This authority does not affect the provisions of §§ 141.860(c)(1) and 141.861(a)(4) of this part.

(b) *Monitoring frequency for total coliforms.* Systems must monitor each calendar quarter that the system provides water to the public, except for seasonal systems or as provided under paragraphs (c) through (h) and (j) of this section. Seasonal systems must meet the monitoring requirements of paragraph (i) of this section.

(c) *Transition to subpart Y.* (1) Systems, including seasonal systems, must continue to monitor according to the total coliform monitoring schedules under § 141.21 that were in effect on March 31, 2016, unless any of the conditions for increased monitoring in paragraph (f) of this section are triggered on or after April 1, 2016, or unless otherwise directed by the State.

(2) Beginning April 1, 2016, the State must perform a special monitoring evaluation during each sanitary survey to review the status of the system, including the distribution system, to determine whether the system is on an appropriate monitoring schedule. After the State has performed the special monitoring evaluation during each sanitary survey, the State may modify the system's monitoring schedule, as necessary, or it may allow the system to stay on its existing monitoring schedule, consistent with the provisions of this section. The State may not allow systems to begin less frequent monitoring under the special monitoring evaluation unless the system has already met the applicable criteria for less frequent monitoring in this section. For seasonal systems on quarterly or annual monitoring, this evaluation must include review of the approved sample siting plan, which must designate the time period(s) for monitoring based on site-specific considerations (e.g., during periods of highest demand or highest vulnerability to contamination). The seasonal system

must collect compliance samples during these time periods.

(d) *Annual site visits.* Beginning no later than calendar year 2017, systems on annual monitoring, including seasonal systems, must have an initial and recurring annual site visit by the State that is equivalent to a Level 2 assessment or an annual voluntary Level 2 assessment that meets the criteria in §141.859(b) to remain on annual monitoring. The periodic required sanitary survey may be used to meet the requirement for an annual site visit for the year in which the sanitary survey was completed.

(e) *Criteria for annual monitoring.* Beginning April 1, 2016, the State may reduce the monitoring frequency for a well-operated ground water system from quarterly routine monitoring to no less than annual monitoring, if the system demonstrates that it meets the criteria for reduced monitoring in paragraphs (e)(1) through (e)(3) of this section, except for a system that has been on increased monitoring under the provisions of paragraph (f) of this section. A system on increased monitoring under paragraph (f) of this section must meet the provisions of paragraph (g) of this section to go to quarterly monitoring and must meet the provisions of paragraph (h) of this section to go to annual monitoring.

(1) The system has a clean compliance history for a minimum of 12 months;

(2) The most recent sanitary survey shows that the system is free of sanitary defects or has corrected all identified sanitary defects, has a protected water source, and meets approved construction standards; and

(3) The State has conducted an annual site visit within the last 12 months and the system has corrected all identified sanitary defects. The system may substitute a Level 2 assessment that meets the criteria in §141.859(b) for the State annual site visit.

(f) *Increased monitoring requirements for systems on quarterly or annual monitoring.* A system on quarterly or annual monitoring that experiences any of the events identified in paragraphs (f)(1) through (f)(4) of this section must begin monthly monitoring the month following the event. A system on annual monitoring that experiences the event identified in paragraphs (f)(5) of this section must begin quarterly monitoring the quarter following the event. The system must continue monthly or quarterly monitoring until the requirements in paragraph (g) of this section for quarterly monitoring or paragraph (h) of this section for annual monitoring are met. A system on monthly monitoring for reasons other than those identified in paragraphs (f)(1) through (f)(4) of this section is not considered to be on increased monitoring for the purposes of paragraphs (g) and (h) of this section.

(1) The system triggers a Level 2 assessment or two Level 1 assessments under the provisions of §141.859 in a rolling 12-month period.

(2) The system has an *E. coli* MCL violation.

(3) The system has a coliform treatment technique violation.

(4) The system has two subpart Y monitoring violations or one subpart Y monitoring violation and one Level 1 assessment under the provisions of §141.859 in a rolling 12-month period for a system on quarterly monitoring.

(5) The system has one subpart Y monitoring violation for a system on annual monitoring.

(g) *Requirements for returning to quarterly monitoring.* The State may reduce the monitoring frequency for a system on monthly monitoring triggered under paragraph (f) of this section to quarterly monitoring if the system meets the criteria in paragraphs (g)(1) and (g)(2) of this section.

(1) Within the last 12 months, the system must have a completed sanitary survey or a site visit by the State or a voluntary Level 2 assessment by a party approved by the State, be free of sanitary defects, and have a protected water source; and

(2) The system must have a clean compliance history for a minimum of 12 months.

(h) *Requirements for systems on increased monitoring to qualify for annual monitoring.* The State may reduce the monitoring frequency for a system on increased monitoring under paragraph (f) of this section if the system meets

the criteria in paragraph (g) of this section plus the criteria in paragraphs (h)(1) and (h)(2) of this section.

(1) An annual site visit by the State and correction of all identified sanitary defects. The system may substitute a voluntary Level 2 assessment by a party approved by the State for the State annual site visit in any given year.

(2) The system must have in place or adopt one or more additional enhancements to the water system barriers to contamination in paragraphs (h)(2)(i) through (h)(2)(v) of this section.

(i) Cross connection control, as approved by the State.

(ii) An operator certified by an appropriate State certification program or regular visits by a circuit rider certified by an appropriate State certification program.

(iii) Continuous disinfection entering the distribution system and a residual in the distribution system in accordance with criteria specified by the State.

(iv) Demonstration of maintenance of at least a 4-log removal or inactivation of viruses as provided for under § 141.403(b)(3).

(v) Other equivalent enhancements to water system barriers as approved by the State.

(i) *Seasonal systems.* (1) Beginning April 1, 2016, all seasonal systems must demonstrate completion of a State-approved start-up procedure, which may include a requirement for startup sampling prior to serving water to the public.

(2) A seasonal system must monitor every month that it is in operation unless it meets the criteria in paragraphs (i)(2)(i) through (iii) of this section to be eligible for monitoring less frequently than monthly beginning April 1, 2016, except as provided under paragraph (c) of this section.

(i) Seasonal systems monitoring less frequently than monthly must have an approved sample siting plan that designates the time period for monitoring based on site-specific considerations (e.g., during periods of highest demand or highest vulnerability to contamination). Seasonal systems must collect compliance samples during this time period.

(ii) To be eligible for quarterly monitoring, the system must meet the criteria in paragraph (g) of this section.

(iii) To be eligible for annual monitoring, the system must meet the criteria under paragraph (h) of this section.

(3) The State may exempt any seasonal system from some or all of the requirements for seasonal systems if the entire distribution system remains pressurized during the entire period that the system is not operating, except that systems that monitor less frequently than monthly must still monitor during the vulnerable period designated by the State.

(j) *Additional routine monitoring the month following a total coliform-positive sample.* Systems collecting samples on a quarterly or annual frequency must conduct additional routine monitoring the month following one or more total coliform-positive samples (with or without a Level 1 treatment technique trigger). Systems must collect at least three routine samples during the next month, except that the State may waive this requirement if the conditions of paragraph (j)(1), (2), or (3) of this section are met. Systems may either collect samples at regular time intervals throughout the month or may collect all required routine samples on a single day if samples are taken from different sites. Systems must use the results of additional routine samples in coliform treatment technique trigger calculations under § 141.859(a).

(1) The State may waive the requirement to collect three routine samples the next month in which the system provides water to the public if the State, or an agent approved by the State, performs a site visit before the end of the next month in which the system provides water to the public. Although a sanitary survey need not be performed, the site visit must be sufficiently detailed to allow the State to determine whether additional monitoring and/or any corrective action is needed. The State cannot approve an employee of the system to perform this site visit, even if the employee is an agent approved by the State to perform sanitary surveys.

(2) The State may waive the requirement to collect three routine samples

the next month in which the system provides water to the public if the State has determined why the sample was total coliform-positive and has established that the system has corrected the problem or will correct the problem before the end of the next month in which the system serves water to the public. In this case, the State must document this decision to waive the following month's additional monitoring requirement in writing, have it approved and signed by the supervisor of the State official who recommends such a decision, and make this document available to the EPA and public. The written documentation must describe the specific cause of the total coliform-positive sample and what action the system has taken and/or will take to correct this problem.

(3) The State may not waive the requirement to collect three additional routine samples the next month in which the system provides water to the public solely on the grounds that all repeat samples are total coliform-negative. If the State determines that the system has corrected the contamination problem before the system takes the set of repeat samples required in § 141.858, and all repeat samples were total coliform-negative, the State may waive the requirement for additional routine monitoring the next month.

§ 141.855 Routine monitoring requirements for community water systems serving 1,000 or fewer people using only ground water.

(a) *General.* (1) The provisions of this section apply to community water systems using only ground water (except ground water under the direct influence of surface water, as defined in § 141.2) and serving 1,000 or fewer people.

(2) Following any total coliform-positive sample taken under the provisions of this section, systems must comply with the repeat monitoring requirements and *E. coli* analytical requirements in § 141.858.

(3) Once all monitoring required by this section and § 141.858 for a calendar month has been completed, systems must determine whether any coliform treatment technique triggers specified in § 141.859 have been exceeded. If any trigger has been exceeded, systems must complete assessments as required by § 141.859.

(b) *Monitoring frequency for total coliforms.* The monitoring frequency for total coliforms is one sample/month, except as provided for under paragraphs (c) through (f) of this section.

(c) *Transition to subpart Y.* (1) All systems must continue to monitor according to the total coliform monitoring schedules under § 141.21 that were in effect on March 31, 2016, unless any of the conditions in paragraph (e) of this section are triggered on or after April 1, 2016, or unless otherwise directed by the State.

(2) Beginning April 1, 2016, the State must perform a special monitoring evaluation during each sanitary survey to review the status of the system, including the distribution system, to determine whether the system is on an appropriate monitoring schedule. After the State has performed the special monitoring evaluation during each sanitary survey, the State may modify the system's monitoring schedule, as necessary, or it may allow the system to stay on its existing monitoring schedule, consistent with the provisions of this section. The State may not allow systems to begin less frequent monitoring under the special monitoring evaluation unless the system has already met the applicable criteria for less frequent monitoring in this section.

(d) *Criteria for reduced monitoring.* (1) The State may reduce the monitoring frequency from monthly monitoring to no less than quarterly monitoring if the system is in compliance with State-certified operator provisions and demonstrates that it meets the criteria in paragraphs (d)(1)(i) through (d)(1)(iii) of this section. A system that loses its certified operator must return to monthly monitoring the month following that loss.

(i) The system has a clean compliance history for a minimum of 12 months.

(ii) The most recent sanitary survey shows the system is free of sanitary defects (or has an approved plan and schedule to correct them and is in compliance with the plan and the schedule), has a protected water source and

meets approved construction standards.

(iii) The system meets at least one of the following criteria:

(A) An annual site visit by the State that is equivalent to a Level 2 assessment or an annual Level 2 assessment by a party approved by the State and correction of all identified sanitary defects (or an approved plan and schedule to correct them and is in compliance with the plan and schedule).

(B) Cross connection control, as approved by the State.

(C) Continuous disinfection entering the distribution system and a residual in the distribution system in accordance with criteria specified by the State.

(D) Demonstration of maintenance of at least a 4-log removal or inactivation of viruses as provided for under § 141.403(b)(3).

(E) Other equivalent enhancements to water system barriers as approved by the State.

(2) [Reserved]

(e) *Return to routine monthly monitoring requirements.* Systems on quarterly monitoring that experience any of the events in paragraphs (e)(1) through (e)(4) of this section must begin monthly monitoring the month following the event. The system must continue monthly monitoring until it meets the reduced monitoring requirements in paragraph (d) of this section.

(1) The system triggers a Level 2 assessment or two Level 1 assessments in a rolling 12-month period.

(2) The system has an *E. coli* MCL violation.

(3) The system has a coliform treatment technique violation.

(4) The system has two subpart Y monitoring violations in a rolling 12-month period.

(f) *Additional routine monitoring the month following a total coliform-positive sample.* Systems collecting samples on a quarterly frequency must conduct additional routine monitoring the month following one or more total coliform-positive samples (with or without a Level 1 treatment technique trigger). Systems must collect at least three routine samples during the next month, except that the State may waive this requirement if the conditions of paragraph (f)(1), (2), or (3) of this section are met. Systems may either collect samples at regular time intervals throughout the month or may collect all required routine samples on a single day if samples are taken from different sites. Systems must use the results of additional routine samples in coliform treatment technique trigger calculations.

(1) The State may waive the requirement to collect three routine samples the next month in which the system provides water to the public if the State, or an agent approved by the State, performs a site visit before the end of the next month in which the system provides water to the public. Although a sanitary survey need not be performed, the site visit must be sufficiently detailed to allow the State to determine whether additional monitoring and/or any corrective action is needed. The State cannot approve an employee of the system to perform this site visit, even if the employee is an agent approved by the State to perform sanitary surveys.

(2) The State may waive the requirement to collect three routine samples the next month in which the system provides water to the public if the State has determined why the sample was total coliform-positive and has established that the system has corrected the problem or will correct the problem before the end of the next month in which the system serves water to the public. In this case, the State must document this decision to waive the following month's additional monitoring requirement in writing, have it approved and signed by the supervisor of the State official who recommends such a decision, and make this document available to the EPA and the public. The written documentation must describe the specific cause of the total coliform-positive sample and what action the system has taken and/or will take to correct this problem.

(3) The State may not waive the requirement to collect three additional routine samples the next month in which the system provides water to the public solely on the grounds that all repeat samples are total coliform-negative. If the State determines that the

system has corrected the contamination problem before the system takes the set of repeat samples required in § 141.858, and all repeat samples were total coliform-negative, the State may waive the requirement for additional routine monitoring the next month.

§ 141.856 Routine monitoring requirements for subpart H public water systems serving 1,000 or fewer people.

(a) *General.* (1) The provisions of this section apply to subpart H public water systems of this part serving 1,000 or fewer people.

(2) Following any total coliform-positive sample taken under the provisions of this section, systems must comply with the repeat monitoring requirements and *E. coli* analytical requirements in § 141.858.

(3) Once all monitoring required by this section and § 141.858 for a calendar month has been completed, systems must determine whether any coliform treatment technique triggers specified in § 141.859 have been exceeded. If any trigger has been exceeded, systems must complete assessments as required by § 141.859.

(4) Seasonal systems. (i) Beginning April 1, 2016, all seasonal systems must demonstrate completion of a State-approved start-up procedure, which may include a requirement for start-up sampling prior to serving water to the public.

(ii) The State may exempt any seasonal system from some or all of the requirements for seasonal systems if the entire distribution system remains pressurized during the entire period that the system is not operating.

(b) *Routine monitoring frequency for total coliforms.* Subpart H systems of this part (including consecutive systems) must monitor monthly. Systems may not reduce monitoring.

(c) *Unfiltered subpart H systems.* A subpart H system of this part that does not practice filtration in compliance with subparts H, P, T, and W must collect at least one total coliform sample near the first service connection each day the turbidity level of the source water, measured as specified in § 141.74(b)(2), exceeds 1 NTU. When one or more turbidity measurements in any day exceed 1 NTU, the system must collect this coliform sample within 24 hours of the first exceedance, unless the State determines that the system, for logistical reasons outside the system's control, cannot have the sample analyzed within 30 hours of collection and identifies an alternative sample collection schedule. Sample results from this coliform monitoring must be included in determining whether the coliform treatment technique trigger in § 141.859 has been exceeded.

§ 141.857 Routine monitoring requirements for public water systems serving more than 1,000 people.

(a) *General.* (1) The provisions of this section apply to public water systems serving more than 1,000 persons.

(2) Following any total coliform-positive sample taken under the provisions of this section, systems must comply with the repeat monitoring requirements and *E. coli* analytical requirements in § 141.858.

(3) Once all monitoring required by this section and § 141.858 for a calendar month has been completed, systems must determine whether any coliform treatment technique triggers specified in § 141.859 have been exceeded. If any trigger has been exceeded, systems must complete assessments as required by § 141.859.

(4) *Seasonal systems.* (i) Beginning April 1, 2016, all seasonal systems must demonstrate completion of a State-approved start-up procedure, which may include a requirement for start-up sampling prior to serving water to the public.

(ii) The State may exempt any seasonal system from some or all of the requirements for seasonal systems if the entire distribution system remains pressurized during the entire period that the system is not operating.

(b) *Monitoring frequency for total coliforms.* The monitoring frequency for total coliforms is based on the population served by the system, as follows:

TOTAL COLIFORM MONITORING FREQUENCY FOR PUBLIC WATER SYSTEMS SERVING MORE THAN 1,000 PEOPLE

Population served	Minimum number of samples per month
1,001 to 2,500	2
2,501 to 3,300	3
3,301 to 4,100	4
4,101 to 4,900	5
4,901 to 5,800	6
5,801 to 6,700	7
6,701 to 7,600	8
7,601 to 8,500	9
8,501 to 12,900	10
12,901 to 17,200	15
17,201 to 21,500	20
21,501 to 25,000	25
25,001 to 33,000	30
33,001 to 41,000	40
41,001 to 50,000	50
50,001 to 59,000	60
59,001 to 70,000	70
70,001 to 83,000	80
83,001 to 96,000	90
96,001 to 130,000	100
130,001 to 220,000	120
220,001 to 320,000	150
320,001 to 450,000	180
450,001 to 600,000	210
600,001 to 780,000	240
780,001 to 970,000	270
970,001 to 1,230,000	300
1,230,001 to 1,520,000	330
1,520,001 to 1,850,000	360
1,850,001 to 2,270,000	390
2,270,001 to 3,020,000	420
3,020,001 to 3,960,000	450
3,960,001 or more	480

(c) *Unfiltered subpart H systems.* A subpart H system of this part that does not practice filtration in compliance with subparts H, P, T, and W must collect at least one total coliform sample near the first service connection each day the turbidity level of the source water, measured as specified in § 141.74(b)(2), exceeds 1 NTU. When one or more turbidity measurements in any day exceed 1 NTU, the system must collect this coliform sample within 24 hours of the first exceedance, unless the State determines that the system, for logistical reasons outside the system's control, cannot have the sample analyzed within 30 hours of collection and identifies an alternative sample collection schedule. Sample results from this coliform monitoring must be included in determining whether the coliform treatment technique trigger in § 141.859 has been exceeded.

(d) *Reduced monitoring.* Systems may not reduce monitoring, except for noncommunity water systems using only ground water (and not ground water under the direct influence of surface water) serving 1,000 or fewer people in some months and more than 1,000 persons in other months. In months when more than 1,000 persons are served, the systems must monitor at the frequency specified in paragraph (a) of this section. In months when 1,000 or fewer people are served, the State may reduce the monitoring frequency, in writing, to a frequency allowed under § 141.854 for a similarly situated system that always serves 1,000 or fewer people, taking into account the provisions in § 141.854(e) through (g).

§ 141.858 Repeat monitoring and *E. coli* requirements.

(a) *Repeat monitoring.* (1) If a sample taken under §§ 141.854 though 141.857 is total coliform-positive, the system must collect a set of repeat samples within 24 hours of being notified of the positive result. The system must collect no fewer than three repeat samples for each total coliform-positive sample found. The State may extend the 24-hour limit on a case-by-case basis if the system has a logistical problem in collecting the repeat samples within 24 hours that is beyond its control. Alternatively, the State may implement criteria for the system to use in lieu of case-by-case extensions. In the case of an extension, the State must specify how much time the system has to collect the repeat samples. The State cannot waive the requirement for a system to collect repeat samples in paragraphs (a)(1) through (a)(3) of this section.

(2) The system must collect all repeat samples on the same day, except that the State may allow a system with a single service connection to collect the required set of repeat samples over a three-day period or to collect a larger volume repeat sample(s) in one or more sample containers of any size, as long as the total volume collected is at least 300 ml.

(3) The system must collect an additional set of repeat samples in the manner specified in paragraphs (a)(1) through (a)(3) of this section if one or more repeat samples in the current set of repeat samples is total coliform-positive. The system must collect the additional set of repeat samples within

24 hours of being notified of the positive result, unless the State extends the limit as provided in paragraph (a)(1) of this section. The system must continue to collect additional sets of repeat samples until either total coliforms are not detected in one complete set of repeat samples or the system determines that a coliform treatment technique trigger specified in §141.859(a) has been exceeded as a result of a repeat sample being total coliform-positive and notifies the State. If a trigger identified in §141.859 is exceeded as a result of a routine sample being total coliform-positive, systems are required to conduct only one round of repeat monitoring for each total coliform-positive routine sample.

(4) After a system collects a routine sample and before it learns the results of the analysis of that sample, if it collects another routine sample(s) from within five adjacent service connections of the initial sample, and the initial sample, after analysis, is found to contain total coliforms, then the system may count the subsequent sample(s) as a repeat sample instead of as a routine sample.

(5) Results of all routine and repeat samples taken under §§141.854 through 141.858 not invalidated by the State must be used to determine whether a coliform treatment technique trigger specified in §141.859 has been exceeded.

(b) *Escherichia coli (E. coli) testing.* (1) If any routine or repeat sample is total coliform-positive, the system must analyze that total coliform-positive culture medium to determine if *E. coli* are present. If *E. coli* are present, the system must notify the State by the end of the day when the system is notified of the test result, unless the system is notified of the result after the State office is closed and the State does not have either an after-hours phone line or an alternative notification procedure, in which case the system must notify the State before the end of the next business day.

(2) The State has the discretion to allow a system, on a case-by-case basis, to forgo *E. coli* testing on a total coliform-positive sample if that system assumes that the total coliform-positive sample is *E. coli*-positive. Accordingly, the system must notify the State as specified in paragraph (b)(1) of this section and the provisions of §141.63(c) apply.

§141.859 Coliform treatment technique triggers and assessment requirements for protection against potential fecal contamination.

(a) *Treatment technique triggers.* Systems must conduct assessments in accordance with paragraph (b) of this section after exceeding treatment technique triggers in paragraphs (a)(1) and (a)(2) of this section.

(1) Level 1 treatment technique triggers.

(i) For systems taking 40 or more samples per month, the system exceeds 5.0% total coliform-positive samples for the month.

(ii) For systems taking fewer than 40 samples per month, the system has two or more total coliform-positive samples in the same month.

(iii) The system fails to take every required repeat sample after any single total coliform-positive sample.

(2) Level 2 treatment technique triggers.

(i) An *E. coli* MCL violation, as specified in §141.860(a).

(ii) A second Level 1 trigger as defined in paragraph (a)(1) of this section, within a rolling 12-month period, unless the State has determined a likely reason that the samples that caused the first Level 1 treatment technique trigger were total coliform-positive and has established that the system has corrected the problem.

(iii) For systems with approved annual monitoring, a Level 1 trigger in two consecutive years.

(b) *Requirements for assessments.* (1) Systems must ensure that Level 1 and 2 assessments are conducted in order to identify the possible presence of sanitary defects and defects in distribution system coliform monitoring practices. Level 2 assessments must be conducted by parties approved by the State.

(2) When conducting assessments, systems must ensure that the assessor evaluates minimum elements that include review and identification of inadequacies in sample sites; sampling protocol; sample processing; atypical events that could affect distributed water quality or indicate that distributed water quality was impaired;

changes in distribution system maintenance and operation that could affect distributed water quality (including water storage); source and treatment considerations that bear on distributed water quality, where appropriate (e.g., small ground water systems); and existing water quality monitoring data. The system must conduct the assessment consistent with any State directives that tailor specific assessment elements with respect to the size and type of the system and the size, type, and characteristics of the distribution system.

(3) *Level 1 assessments.* A system must conduct a Level 1 assessment consistent with State requirements if the system exceeds one of the treatment technique triggers in paragraph (a)(1) of this section.

(i) The system must complete a Level 1 assessment as soon as practical after any trigger in paragraph (a)(1) of this section. In the completed assessment form, the system must describe sanitary defects detected, corrective actions completed, and a proposed timetable for any corrective actions not already completed. The assessment form may also note that no sanitary defects were identified. The system must submit the completed Level 1 assessment form to the State within 30 days after the system learns that it has exceeded a trigger.

(ii) If the State reviews the completed Level 1 assessment and determines that the assessment is not sufficient (including any proposed timetable for any corrective actions not already completed), the State must consult with the system. If the State requires revisions after consultation, the system must submit a revised assessment form to the State on an agreed-upon schedule not to exceed 30 days from the date of the consultation.

(iii) Upon completion and submission of the assessment form by the system, the State must determine if the system has identified a likely cause for the Level 1 trigger and, if so, establish that the system has corrected the problem, or has included a schedule acceptable to the State for correcting the problem.

(4) *Level 2 assessments.* A system must ensure that a Level 2 assessment consistent with State requirements is conducted if the system exceeds one of the treatment technique triggers in paragraph (a)(2) of this section. The system must comply with any expedited actions or additional actions required by the State in the case of an *E. coli* MCL violation.

(i) The system must ensure that a Level 2 assessment is completed by the State or by a party approved by the State as soon as practical after any trigger in paragraph (a)(2) of this section. The system must submit a completed Level 2 assessment form to the State within 30 days after the system learns that it has exceeded a trigger. The assessment form must describe sanitary defects detected, corrective actions completed, and a proposed timetable for any corrective actions not already completed. The assessment form may also note that no sanitary defects were identified.

(ii) The system may conduct Level 2 assessments if the system has staff or management with the certification or qualifications specified by the State unless otherwise directed by the State.

(iii) If the State reviews the completed Level 2 assessment and determines that the assessment is not sufficient (including any proposed timetable for any corrective actions not already completed), the State must consult with the system. If the State requires revisions after consultation, the system must submit a revised assessment form to the State on an agreed-upon schedule not to exceed 30 days.

(iv) Upon completion and submission of the assessment form by the system, the State must determine if the system has identified a likely cause for the Level 2 trigger and determine whether the system has corrected the problem, or has included a schedule acceptable to the State for correcting the problem.

(c) *Corrective action.* Systems must correct sanitary defects found through either Level 1 or 2 assessments conducted under paragraph (b) of this section. For corrections not completed by the time of submission of the assessment form, the system must complete the corrective action(s) in compliance with a timetable approved by the State in consultation with the system. The

system must notify the State when each scheduled corrective action is completed.

(d) *Consultation*. At any time during the assessment or corrective action phase, either the water system or the State may request a consultation with the other party to determine the appropriate actions to be taken. The system may consult with the State on all relevant information that may impact on its ability to comply with a requirement of this subpart, including the method of accomplishment, an appropriate timeframe, and other relevant information.

§ 141.860 Violations.

(a) *E. coli MCL Violation*. A system is in violation of the MCL for *E. coli* when any of the conditions identified in paragraphs (a)(1) through (a)(4) of this section occur.

(1) The system has an *E. coli*-positive repeat sample following a total coliform-positive routine sample.

(2) The system has a total coliform-positive repeat sample following an *E. coli*-positive routine sample.

(3) The system fails to take all required repeat samples following an *E. coli*-positive routine sample.

(4) The system fails to test for *E. coli* when any repeat sample tests positive for total coliform.

(b) *Treatment technique violation*. (1) A treatment technique violation occurs when a system exceeds a treatment technique trigger specified in § 141.859(a) and then fails to conduct the required assessment or corrective actions within the timeframe specified in § 141.859(b) and (c).

(2) A treatment technique violation occurs when a seasonal system fails to complete a State-approved start-up procedure prior to serving water to the public.

(c) *Monitoring violations*. (1) Failure to take every required routine or additional routine sample in a compliance period is a monitoring violation.

(2) Failure to analyze for *E. coli* following a total coliform-positive routine sample is a monitoring violation.

(d) *Reporting violations*. (1) Failure to submit a monitoring report or completed assessment form after a system properly conducts monitoring or assessment in a timely manner is a reporting violation.

(2) Failure to notify the State following an *E. coli*-positive sample as required by § 141.858(b)(1) in a timely manner is a reporting violation.

(3) Failure to submit certification of completion of State-approved start-up procedure by a seasonal system is a reporting violation.

§ 141.861 Reporting and recordkeeping.

(a) *Reporting*—(1) *E. coli*. (i) A system must notify the State by the end of the day when the system learns of an *E. coli* MCL violation, unless the system learns of the violation after the State office is closed and the State does not have either an after-hours phone line or an alternative notification procedure, in which case the system must notify the State before the end of the next business day, and notify the public in accordance with subpart Q of this part.

(ii) A system must notify the State by the end of the day when the system is notified of an *E. coli*-positive routine sample, unless the system is notified of the result after the State office is closed and the State does not have either an after-hours phone line or an alternative notification procedure, in which case the system must notify the State before the end of the next business day.

(2) A system that has violated the treatment technique for coliforms in § 141.859 must report the violation to the State no later than the end of the next business day after it learns of the violation, and notify the public in accordance with subpart Q of this part.

(3) A system required to conduct an assessment under the provisions of § 141.859 of this part must submit the assessment report within 30 days. The system must notify the State in accordance with § 141.859(c) when each scheduled corrective action is completed for corrections not completed by the time of submission of the assessment form.

(4) A system that has failed to comply with a coliform monitoring requirement must report the monitoring violation to the State within 10 days

after the system discovers the violation, and notify the public in accordance with subpart Q of this part.

(5) A seasonal system must certify, prior to serving water to the public, that it has complied with the State-approved start-up procedure.

(b) *Recordkeeping.* (1) The system must maintain any assessment form, regardless of who conducts the assessment, and documentation of corrective actions completed as a result of those assessments, or other available summary documentation of the sanitary defects and corrective actions taken under §141.859 for State review. This record must be maintained by the system for a period not less than five years after completion of the assessment or corrective action.

(2) The system must maintain a record of any repeat sample taken that meets State criteria for an extension of the 24-hour period for collecting repeat samples as provided for under §141.858(a)(1) of this part.

[78 FR 10354, Feb. 13, 2013, as amended at 79 FR 10670, Feb. 26, 2014]

PART 142—NATIONAL PRIMARY DRINKING WATER REGULATIONS IMPLEMENTATION

Subpart A—General Provisions

Sec.
142.1 Applicability.
142.2 Definitions.
142.3 Scope.
142.4 State and local authority.

Subpart B—Primary Enforcement Responsibility

142.10 Requirements for a determination of primary enforcement responsibility.
142.11 Initial determination of primary enforcement responsibility.
142.12 Revision of State programs.
142.13 Public hearing.
142.14 Records kept by States.
142.15 Reports by States.
142.16 Special primacy requirements.
142.17 Review of State programs and procedures for withdrawal of approved primacy programs.
142.18 EPA review of State monitoring determinations.
142.19 EPA review of State implementation of national primary drinking water regulations for lead and copper.

Subpart C—Review of State-Issued Variances and Exemptions

142.20 State-issued variances and exemptions under Section 1415(a) and Section 1416 of the Act.
142.21 State consideration of a variance or exemption request.
142.22 Review of State variances, exemptions and schedules.
142.23 Notice to State.
142.24 Administrator's rescission.

Subpart D—Federal Enforcement

142.30 Failure by State to assure enforcement.
142.31 [Reserved]
142.32 Petition for public hearing.
142.33 Public hearing.
142.34 Entry and inspection of public water systems.

Subpart E—Variances Issued by the Administrator Under Section 1415(a) of the Act

142.40 Requirements for a variance.
142.41 Variance request.
142.42 Consideration of a variance request.
142.43 Disposition of a variance request.
142.44 Public hearings on variances and schedules.
142.45 Action after hearing.
142.46 Alternative treatment techniques.

Subpart F—Exemptions Issued by the Administrator

142.50 Requirements for an exemption.
142.51 Exemption request.
142.52 Consideration of an exemption request.
142.53 Disposition of an exemption request.
142.54 Public hearings on exemption schedules.
142.55 Final schedule.
142.56 Extension of date for compliance.
142.57 Bottled water, point-of-use, and point-of-entry devices.

Subpart G—Identification of Best Technology, Treatment Techniques or Other Means Generally Available

142.60 Variances from the maximum contaminant level for total trihalomethanes.
142.61 Variances from the maximum contaminant level for fluoride.
142.62 Variances and exemptions from the maximum contaminant levels for organic and inorganic chemicals.
142.63 Variances and exemptions from the maximum contaminant level for total coliforms.

142.64 Variances and exemptions from the requirements of part 141, subpart H—Filtration and Disinfection.
142.65 Variances and exemptions from the maximum contaminant levels for radionuclides.

Subpart H—Indian Tribes

142.72 Requirements for Tribal eligibility.
142.76 Request by an Indian Tribe for a determination of eligibility.
142.78 Procedure for processing an Indian Tribe's application.

Subpart I—Administrator's Review of State Decisions that Implement Criteria Under Which Filtration Is Required

142.80 Review procedures.
142.81 Notice to the State.

Subpart J [Reserved]

Subpart K—Variances for Small System

GENERAL PROVISIONS

142.301 What is a small system variance?
142.302 Who can issue a small system variance?
142.303 Which size public water systems can receive a small system variance?
142.304 For which of the regulatory requirements is a small system variance available?
142.305 When can a small system variance be granted by a State?

REVIEW OF SMALL SYSTEM VARIANCE APPLICATION

142.306 What are the responsibilities of the public water system, State and the Administrator in ensuring that sufficient information is available and for evaluation of a small system variance application?
142.307 What terms and conditions must be included in a small system variance?

PUBLIC PARTICIPATION

142.308 What public notice is required before a State or the Administrator proposes to issue a small system variance?
142.309 What are the public meeting requirements associated with the proposal of a small system variance?
142.310 How can a person served by the public water system obtain EPA review of a State proposed small system variance?

EPA REVIEW AND APPROVAL OF SMALL SYSTEM VARIANCES

142.311 What procedures allow for the Administrator to object to a proposed small system variance or overturn a granted small system variance for a public water system serving 3,300 or fewer persons?
142.312 What EPA action is necessary when a State proposes to grant a small system variance to a public water system serving a population of more than 3,300 and fewer than 10,000 persons?
142.313 How will the Administrator review a State's program under this subpart?

AUTHORITY: 42 U.S.C. 300f, 300g–1, 300g–2, 300g–3, 300g–4, 300g–5, 300g–6, 300j–4, 300j–9, and 300j–11.

SOURCE: 41 FR 2918, Jan. 20, 1976, unless otherwise noted.

Subpart A—General Provisions

§ 142.1 Applicability.

This part sets forth, pursuant to sections 1413 through 1416, 1445, and 1450 of the Public Health Service Act, as amended by the Safe Drinking Water Act, Public Law 93–523, regulations for the implementation and enforcement of the national primary drinking water regulations contained in part 141 of this chapter.

§ 142.2 Definitions.

As used in this part, and except as otherwise specifically provided:

Act means the Public Health Service Act.

Administrator means the Administrator of the United States Environmental Protection Agency or his authorized representative.

Agency means the United States Environmental Protection Agency.

Approved State primacy program consists of those program elements listed in § 142.11(a) that were submitted with the initial State application for primary enforcement authority and approved by the EPA Administrator and all State program revisions thereafter that were approved by the EPA Administrator.

Contaminant means any physical, chemical, biological, or radiological substance or matter in water.

Federal agency means any department, agency, or instrumentality of the United States.

Indian Tribe means any Indian Tribe having a Federally recognized governing body carrying out substantial governmental duties and powers over a defined area.

Interstate Agency means an agency of two or more States established by or under an agreement or compact approved by the Congress, or any other agency of two or more States or Indian Tribes having substantial powers or duties pertaining to the control of pollution as determined and approved by the Administrator.

Maximum contaminant level means the maximum permissible level of a contaminant in water which is delivered to the free flowing outlet of the ultimate user of a public water system; except in the case of turbidity where the maximum permissible level is measured at the point of entry to the distribution system. Contaminants added to the water under circumstances controlled by the user, except for those resulting from corrosion of piping and plumbing caused by water quality are excluded from this definition.

Municipality means a city, town, or other public body created by or pursuant to State law, or an Indian Tribe which does not meet the requirements of subpart H of this part.

National primary drinking water regulation means any primary drinking water regulation contained in part 141 of this chapter.

Person means an individual; corporation; company; association; partnership; municipality; or State, federal, or Tribal agency.

Primary enforcement responsibility means the primary responsibility for administration and enforcement of primary drinking water regulations and related requirements applicable to public water systems within a State.

Public water system or *PWS* means a system for the provision to the public of water for human consumption through pipes or, after August 5, 1998, other constructed conveyances, if such system has at least fifteen service connections or regularly serves an average of at least twenty-five individuals daily at least 60 days out of the year. Such term includes:

Any collection, treatment, storage, and distribution facilities under control of the operator of such system and used primarily in connection with such system; and any collection or pretreatment storage facilities not under such control which are used primarily in connection with such system. Such term does not include any ''special irrigation district.'' A public water system is either a ''community water system'' or a ''noncommunity water system'' as defined in § 141.2.

Sanitary survey means an onsite review of the water source, facilities, equipment, operation and maintenance of a public water system for the purpose of evaluating the adequacy of such source, facilities, equipment, operation and maintenance for producing and distributing safe drinking water.

Service connection, as used in the definition of *public water system,* does not include a connection to a system that delivers water by a constructed conveyance other than a pipe if:

(1) The water is used exclusively for purposes other than residential uses (consisting of drinking, bathing, and cooking, or other similar uses);

(2) The Administrator or the State exercising primary enforcement responsibility for public water systems, determines that alternative water to achieve the equivalent level of public health protection provided by the applicable national primary drinking water regulation is provided for residential or similar uses for drinking and cooking; or

(3) The Administrator or the State exercising primary enforcement responsibility for public water systems, determines that the water provided for residential or similar uses for drinking, cooking, and bathing is centrally treated or treated at the point of entry by the provider, a pass-through entity, or the user to achieve the equivalent level of protection provided by the applicable national primary drinking water regulations.

Special irrigation district means an irrigation district in existence prior to May 18, 1994 that provides primarily agricultural service through a piped water system with only incidental residential or similar use where the system or the residential or similar users of the system comply with the exclusion provisions in section 1401(4)(B)(i)(II) or (III).

State means one of the States of the United States, the District of Columbia, the Commonwealth of Puerto Rico, the Virgin Islands, Guam, American

Samoa, the Commonwealth of the Northern Mariana Islands, the Trust Territory of the Pacific Islands, or an eligible Indian tribe.

State primary drinking water regulation means a drinking water regulation of a State which is comparable to a national primary drinking water regulation.

State program revision means a change in an approved State primacy program.

Supplier of water means any person who owns or operates a public water system.

Treatment technique requirement means a requirement of the national primary drinking water regulations which specifies for a contaminant a specific treatment technique(s) known to the Administrator which leads to a reduction in the level of such contaminant sufficient to comply with the requirements of part 141 of this chapter.

[41 FR 2918, Jan. 20, 1976, as amended at 53 FR 37410, Sept. 26, 1988; 54 FR 52137, Dec. 20, 1989; 59 FR 64344, Dec. 14, 1994; 63 FR 23367, Apr. 28, 1998]

§ 142.3 Scope.

(a) Except where otherwise provided, this part applies to each public water system in each State; except that this part shall not apply to a public water system which meets all of the following conditions:

(1) Which consists only of distribution and storage facilities (and does not have any collection and treatment facilities);

(2) Which obtains all of its water from, but is not owned or operated by, a public water system to which such regulations apply;

(3) Which does not sell water to any person; and

(4) Which is not a carrier which conveys passengers in interstate commerce.

(b) In order to qualify for primary enforcement responsibility, a State's program for enforcement of primary drinking water regulations must apply to all other public water systems in the State, except for:

(1) Public water systems on carriers which convey passengers in interstate commerce;

(2) Public water systems on Indian land with respect to which the State does not have the necessary jurisdiction or its jurisdiction is in question; or

(c) Section 1451 of the SDWA authorizes the Administrator to delegate primary enforcement responsibility for public water systems to Indian Tribes. An Indian Tribe must meet the statutory criteria at 42 U.S.C. 300j–11(b)(1) before it is eligible to apply for Public Water System Supervision grants and primary enforcement responsibility. All primary enforcement responsibility requirements of parts 141 and 142 apply to Indian Tribes except where specifically noted.

[41 FR 2918, Jan. 20, 1976, as amended at 53 FR 37410, Sept. 26, 1988; 59 FR 64344, Dec. 14, 1994; 67 FR 70858, Nov. 27, 2002]

§ 142.4 State and local authority.

Nothing in this part shall diminish any authority of a State or political subdivision to adopt or enforce any law or regulation respecting drinking water regulations or public water systems, but no such law or regulation shall relieve any person of any requirements otherwise applicable under this part.

Subpart B—Primary Enforcement Responsibility

§ 142.10 Requirements for a determination of primary enforcement responsibility.

A State has primary enforcement responsibility for public water systems in the State during any period for which the Administrator determines, based upon a submission made pursuant to § 142.11, and submission under § 142.12, that such State, pursuant to appropriate State legal authority:

(a) Has adopted drinking water regulations which are no less stringent than the national primary drinking water regulations (NPDWRs) in effect under part 141 of this chapter;

(b) Has adopted and is implementing adequate procedures for the enforcement of such State regulations, such procedures to include:

(1) Maintenance of an inventory of public water systems.

(2) A systematic program for conducting sanitary surveys of public

water systems in the State, with priority given to sanitary surveys of public water systems not in compliance with State primary drinking water regulations.

(3)(i) The establishment and maintenance of a State program for the certification of laboratories conducting analytical measurements of drinking water contaminants pursuant to the requirements of the State primary drinking water regulations including the designation by the State of a laboratory officer, or officers, certified by the Administrator, as the official(s) responsible for the State's certification program. The requirements of this paragraph may be waived by the Administrator for any State where all analytical measurements required by the State's primary drinking water regulations are conducted at laboratories operated by the State and certified by the Agency. Until such time as the Agency establishes a National quality assurance program for laboratory certification the State shall maintain an interim program for the purpose of approving those laboratories from which the required analytical measurements will be acceptable.

(ii) Upon a showing by an Indian Tribe of an intergovernmental or other agreement to have all analytical tests performed by a certified laboratory, the Administrator may waive this requirement.

(4) Assurance of the availability to the State of laboratory facilities certified by the Administrator and capable of performing analytical measurements of all contaminants specified in the State primary drinking water regulations. Until such time as the Agency establishes a National quality assurance program for laboratory certification the Administrator will approve such State laboratories on an interim basis.

(5) The establishment and maintenance of an activity to assure that the design and construction of new or substantially modified public water system facilities will be capable of compliance with the State primary drinking water regulations.

(6) Statutory or regulatory enforcement authority adequate to compel compliance with the State primary drinking water regulations in appropriate cases, such authority to include:

(i) Authority to apply State primary drinking water regulations to all public water systems in the State covered by the national primary drinking water regulations, except for interstate carrier conveyances and systems on Indian land with respect to which the State does not have the necessary jurisdiction or its jurisdiction is in question.

(ii) Authority to sue in courts of competent jurisdiction to enjoin any threatened or continuing violation of the State primary drinking water regulations.

(iii) Right of entry and inspection of public water systems, including the right to take water samples, whether or not the State has evidence that the system is in violation of an applicable legal requirement.

(iv) Authority to require suppliers of water to keep appropriate records and make appropriate reports to the State.

(v) Authority to require public water systems to give public notice that is no less stringent than the EPA requirements in subpart Q of part 141 of this chapter and § 142.16(a).

(vi) Authority to assess civil or criminal penalties for violation of the State's primary drinking water regulations and public notification requirements, including the authority to assess daily penalties or multiple penalties when a violation continues;

(vii) Authority to require community water systems to provide consumer confidence reports as required under 40 CFR part 141, subpart O.

(c) Has established and will maintain record keeping and reporting of its activities under paragraphs (a), (b) and (d) in compliance with §§ 142.14 and 142.15;

(d) *Variances and exemptions.* (1) If it permits small system variances pursuant to Section 1415(e) of the Act, it must provide procedures no less stringent than the Act and Subpart K of this part.

(2) If it permits variances (other than small system variances) or exemptions, or both, from the requirements of the State primary drinking water regulations, it shall do so under conditions and in a manner no less stringent than

the requirements of Sections 1415 and 1416 of the Act. In granting these variances, the State must adopt the Administrator's findings of best available technology, treatment techniques, or other means available as specified in Subpart G of this part. (States with primary enforcement responsibility may adopt procedures different from those set forth in Subparts E and F of this part, which apply to the issuance of variances (other than small system variances) and exemptions by the Administrator in States that do not have primary enforcement responsibility, provided that the State procedures meet the requirements of this paragraph); and

(e) Has adopted and can implement an adequate plan for the provision of safe drinking water under emergency circumstances including, but not limited to, earthquakes, floods, hurricanes, and other natural disasters.

(f)(1) Has adopted authority for assessing administrative penalties unless the constitution of the State prohibits the adoption of such authority. For public water systems serving a population of more than 10,000 individuals, States must have the authority to impose a penalty of at least $1,000 per day per violation. For public water systems serving a population of 10,000 or fewer individuals, States must have penalties that are adequate to ensure compliance with the State regulations as determined by the State.

(2) As long as criteria in paragraph (f)(1) of this section are met, States may establish a maximum administrative penalty per violation that may be assessed on a public water system.

(g) Has adopted regulations consistent with 40 CFR part 3—(Electronic reporting) if the state receives electronic documents.

(h) An Indian Tribe shall not be required to exercise criminal enforcement jurisdiction to meet the requirements for primary enforcement responsibility.

[41 FR 2918, Jan. 20, 1976, as amended at 43 FR 5373, Feb. 8, 1978; 52 FR 20675, June 2, 1987; 52 FR 41550, Oct. 28, 1987; 53 FR 37410, Sept. 26, 1988; 54 FR 15188, Apr. 17, 1989; 54 FR 52138, Dec. 20, 1989; 63 FR 23367, Apr. 28, 1998; 63 FR 43846, Aug. 14, 1998; 63 FR 44535, Aug. 19, 1998; 65 FR 26048, May 4, 2000; 70 FR 59888, Oct. 13, 2005]

§ 142.11 Initial determination of primary enforcement responsibility.

(a) A State may apply to the Administrator for a determination that the State has primary enforcement responsibility for public water systems in the State pursuant to section 1413 of the Act. The application shall be as concise as possible and include a side-by-side comparison of the Federal requirements and the corresponding State authorities, including citations to the specific statutes and administrative regulations or ordinances and, wherever appropriate, judicial decisions which demonstrate adequate authority to meet the requirements of § 142.10. The following information is to be included with the State application.

(1) The text of the State's primary drinking water regulations, with references to those State regulations that vary from comparable regulations set forth in part 141 of this chapter, and a demonstration that any different State regulation is at least as stringent as the comparable regulation contained in part 141.

(2) A description, accompanied by appropriate documentation, of the State's procedures for the enforcement of the State primary drinking water regulations. The submission shall include:

(i) A brief description of the State's program to maintain a current inventory of public water systems.

(ii) A brief description of the State's program for conducting sanitary surveys, including an explanation of the priorities given to various classes of public water systems.

(iii) A brief description of the State's laboratory approval or certification program, including the name(s) of the responsible State laboratory officer(s) certified by the Administrator.

(iv) Identification of laboratory facilities, available to the State, certified or approved by the Administrator and capable of performing analytical measurements of all contaminants specified in the State's primary drinking water regulations.

(v) A brief description of the State's program activity to assure that the design and construction of new or substantially modified public water system facilities will be capable of compliance with the requirements of the State primary drinking water regulations.

(vi) Copies of State statutory and regulatory provisions authorizing the adoption and enforcement of State primary drinking water regulations, and a brief description of State procedures for administrative or judicial action with respect to public water systems not in compliance with such regulations.

(3) A statement that the State will make such reports and will keep such records as may be required pursuant to §§ 142.14 and 142.15.

(4) If the State permits variances or exemptions from its primary drinking water regulations, the text of the State's statutory and regulatory provisions concerning variances and exemptions.

(5) A brief description of the State's plan for the provision of safe drinking water under emergency conditions.

NOTE: In satisfaction of this requirement, for public water supplies from groundwater sources, EPA will accept the contingency plan for providing alternate drinking water supplies that is part of a State's Wellhead Protection Program, where such program has been approved by EPA pursuant to section 1428 of the SDWA.

(6)(i) A copy of the State statutory and regulatory provisions authorizing the executive branch of the State government to impose an administrative penalty on all public water systems, and a brief description of the State's authority for administrative penalties that will ensure adequate compliance of systems serving a population of 10,000 or fewer individuals.

(ii) In instances where the State constitution prohibits the executive branch of the State government from assessing any penalty, the State shall submit a copy of the applicable part of its constitution and a statement from its Attorney General confirming this interpretation.

(7)(i) A statement by the State Attorney General (or the attorney for the State primacy agency if it has independent legal counsel) or the attorney representing the Indian tribe that certifies that the laws and regulations adopted by the State or tribal ordinances to carry out the program were duly adopted and are enforceable. State statutes and regulations cited by the State Attorney General and tribal ordinances cited by the attorney representing the Indian tribe shall be in the form of lawfully adopted State statutes and regulations or tribal ordinances at the time the certification is made and shall be fully effective by the time the program is approved by EPA. To qualify as ''independent legal counsel,'' the attorney signing the statement required by this section shall have full authority to independently represent the State primacy agency or Indian tribe in court on all matters pertaining to the State or tribal program.

(ii) After EPA has received the documents required under paragraph (a) of this section, EPA may selectively require supplemental statements by the State Attorney General (or the attorney for the State primacy agency if it has independent legal counsel) or the attorney representing the Indian tribe. Each supplemental statement shall address all issues concerning the adequacy of State authorities to meet the requirements of § 142.10 that have been identified by EPA after thorough examination as unresolved by the documents submitted under paragraph (a) of this section.

(b)(1) The administrator shall act on an application submitted pursuant to § 142.11 within 90 days after receiving such application, and shall promptly inform the State in writing of this action. If he denies the application, his written notification to the State shall include a statement of reasons for the denial.

(2) A final determination by the Administrator that a State has met or has not met the requirements for primary enforcement responsibility shall take effect in accordance with the public notice requirements and related procedures under § 142.13.

(3) When the Administrator's determination becomes effective pursuant

to § 142.13, it shall continue in effect unless terminated pursuant to § 142.17.

[41 FR 2918, Jan. 20, 1976, as amended at 54 FR 52138, Dec. 20, 1989; 60 FR 33661, June 28, 1995; 63 FR 23367, Apr. 28, 1998]

§ 142.12 Revision of State programs.

(a) *General requirements.* Either EPA or the primacy State may initiate actions that require the State to revise its approved State primacy program. To retain primary enforcement responsibility, States must adopt all new and revised national primary drinking water regulations promulgated in part 141 of this chapter and any other requirements specified in this part.

(1) Whenever a State revises its approved primacy program to adopt new or revised Federal regulations, the State must submit a request to the Administrator for approval of the program revision, using the procedures described in paragraphs (b), (c), and (d) of this section. The Administrator shall approve or disapprove each State request for approval of a program revision based on the requirements of the Safe Drinking Water Act and of this part.

(2) For all State program revisions not covered under § 142.12(a)(1), the review procedures outlined in § 142.17(a) shall apply.

(b) *Timing of State requests for approval of program revisions to adopt new or revised Federal regulations.* (1) Complete and final State requests for approval of program revisions to adopt new or revised EPA regulations must be submitted to the Administrator not later than 2 years after promulgation of the new or revised EPA regulations, unless the State requests an extension and the Administrator has approved the request pursuant to paragraph (b)(2) of this section. If the State expects to submit a final State request for approval of a program revision to EPA more than 2 years after promulgation of the new or revised EPA regulations, the State shall request an extension of the deadline before the expiration of the 2-year period.

(2) The final date for submission of a complete and final State request for a program revision may be extended by EPA for up to a two-year period upon a written application by the State to the Administrator. In the extension application the State must demonstrate it is requesting the extension because it cannot meet the original deadline for reasons beyond its control despite a good faith effort to do so. The application must include a schedule for the submission of a final request by a certain time and provide sufficient information to demonstrate that the State:

(i)(A) Currently lacks the legislative or regulatory authority to enforce the new or revised requirements, or

(B) Currently lacks the program capability adequate to implement the new or revised requirements; or

(C) Is requesting the extension to group two or more program revisions in a single legislative or regulatory action; and

(ii) Is implementing the EPA requirements to be adopted by the State in its program revision pursuant to paragraph (b)(3) of this section within the scope of its current authority and capabilities.

(3) To be granted an extension, the State must agree with EPA to meet certain requirements during the extension period, which may include the following types of activities as determined appropriate by the Administrator on a case-by-case basis:

(i) Informing public water systems of the new EPA (and upcoming State) requirements and that EPA will be overseeing implementation of the requirements until the State, if eligible for interim primacy, submits a complete and final primacy revision request to EPA, or in all other cases, until EPA approves the State program revision;

(ii) Collecting, storing and managing laboratory results, public notices, and other compliance and operation data required by the EPA regulations;

(iii) Assisting EPA in the development of the technical aspects of enforcement actions and conducting informal follow-up on violations (telephone calls, letters, etc.);

(iv) Providing technical assistance to public water systems;

(v) Providing EPA with all information prescribed by § 142.15 of this part on State reporting; and

(vi) For States whose request for an extension is based on a current lack of

program capability adequate to implement the new requirements, taking steps agreed to by EPA and the State during the extension period to remedy the deficiency.

(c) *Contents of a State request for approval of a program revision.* (1) The State request for EPA approval of a program revision shall be concise and must include:

(i) The documentation necessary (pursuant to §142.11(a)) to update the approved State primacy program, and identification of those elements of the approved State primacy program that have not changed because of the program revision. The documentation shall include a side-by-side comparison of the Federal requirements and the corresponding State authorities, including citations to the specific statutes and administrative regulations or ordinances and, wherever appropriate, judicial decisions which demonstrate adequate authority to meet the requirements of §142.10 as they apply to the program revision.

(ii) Any additional materials that are listed in §142.16 of this part for a specific EPA regulation, as appropriate; and

(iii) For a complete and final State request only, unless one of the conditions listed in paragraph (c)(2) of this section are met, a statement by the State Attorney General (or the attorney for the State primacy agency if it has independent legal counsel) or the attorney representing the Indian tribe that certifies that the laws and regulations adopted by the State or tribal ordinances to carry out the program revision were duly adopted and are enforceable. State statutes and regulations cited by the State Attorney General and tribal ordinances cited by the attorney for the Indian tribe shall be in the form of lawfully adopted State statutes and regulations or tribal ordinances at the time the certification is made and shall be fully effective by the time the request for program revision is approved by EPA. To qualify as ''independent legal counsel,'' the attorney signing the statement required by this section shall have full authority to independently represent the State primacy agency or tribe in court on all matters pertaining to the State or tribal program.

(2) An Attorney General's statement will be required as part of the State request for EPA approval of a program revision unless EPA specifically waives this requirement for a specific regulation at the time EPA promulgates the regulation, or by later written notice from the Administrator to the State.

(3) After EPA has received the documents required under paragraph (c)(1) of this section, EPA may selectively require supplemental statements by the State Attorney General (or the attorney for the State primacy agency if it has independent legal counsel) or the attorney representing the Indian tribe. Each supplemental statement shall address all issues concerning the adequacy of State authorities to meet the requirements of §142.10 that have been identified by EPA after thorough examination as unresolved by the documents submitted under paragraph (c)(1) of this section.

(d) *Procedures for review of a State request for approval of a program revision*—(1) *Preliminary request.* (i) The State may submit to the Administrator for his or her review a preliminary request for approval of each program revision, containing the information listed in paragraph (c)(1) of this section, *in draft form.* The preliminary request does not require an Attorney General's statement in draft form, but does require draft State statutory or regulatory changes and a side-by-side comparison of State authorities with EPA requirements to demonstrate that the State program revision meets EPA requirements under §142.10 of this part. The preliminary request should be submitted to the Administrator as soon as practicable after the promulgation of the EPA regulations.

(ii) The Administrator will review the preliminary request submitted in accordance with paragraph (d)(1)(i) of this section and make a tentative determination on the request. The Administrator will send the tentative determination and other comments or suggestions to the State for its use in developing the State's final request under paragraph (d)(2) of this section.

(2) *Final request.* The State must submit a complete and final request for

approval of a program revision to the Administrator for his or her review and approval. The request must contain the information listed in paragraph (c)(1) of this section *in complete and final form,* in accordance with any tentative determination EPA may have issued. Complete and final State requests for program revisions shall be submitted within two years of the promulgation of the new or revised EPA regulations, as specified in paragraph (b) of this section.

(3) *EPA's determination on a complete and final request.* (i) The Administrator shall act on a State's request for approval of a program revision within 90 days after determining that the State request is complete and final and shall promptly notify the State of his/her determination.

(ii) If the Administrator disapproves a final request for approval of a program revision, the Administrator will notify the State in writing. Such notification will include a statement of the reasons for disapproval.

(iii) A final determination by the Administrator on a State's request for approval of a program revision shall take effect in accordance with the public notice requirements and related procedures under § 142.13.

(e) *Interim primary enforcement authority.* A State with an approved primacy program for each existing national primary drinking water regulation shall be considered to have interim primary enforcement authority with respect to each new or revised national drinking water regulation that it adopts beginning when the new or revised State regulation becomes effective or when the complete primacy revision application is submitted to the Administrator, whichever is later, and shall end when the Administrator approves or disapproves the State's revised primacy program.

[54 FR 52138, Dec. 20, 1989, as amended at 63 FR 23367, Apr. 28, 1998; 66 FR 3780, Jan. 16, 2001]

§ 142.13 Public hearing.

(a) The Administrator shall provide an opportunity for a public hearing before a final determination pursuant to § 142.11 that the State meets or does not meet the requirements for obtaining primary enforcement responsibility, or a final determination pursuant to § 142.12(d)(3) to approve or disapprove a State request for approval of a program revision, or a final determination pursuant to § 142.17 that a State no longer meets the requirements for primary enforcement responsibility.

(b) The Administrator shall publish notice of any determination specified in paragraph (a) of this section in the FEDERAL REGISTER and in a newspaper or newspapers of general circulation in the State involved within 15 days after making such determination, with a statement of his reasons for the determination. Such notice shall inform interested persons that they may request a public hearing on the Administrator's determination. Such notice shall also indicate one or more locations in the State where information submitted by the State pursuant to § 142.11 is available for inspection by the general public. A public hearing may be requested by any interested person other than a Federal agency. Frivolous or insubstantial requests for hearing may be denied by the Administrator.

(c) Requests for hearing submitted pursuant to paragraph (b) of this section shall be submitted to the Administrator within 30 days after publication of notice of opportunity for hearing in the FEDERAL REGISTER. Such requests shall include the following information:

(1) The name, address and telephone number of the individual, organization or other entity requesting a hearing.

(2) A brief statement of the requesting person's interest in the Administrator's determination and of information that the requesting person intends to submit at such hearing.

(3) The signature of the individual making the request; or, if the request is made on behalf of an organization or other entity, the signature of a responsible official of the organization or other entity.

(d) The Administrator shall give notice in the FEDERAL REGISTER and in a newspaper or newspapers of general circulation in the State involved of any hearing to be held pursuant to a request submitted by an interested person or on his own motion. Notice of the hearing shall also be sent to the person

requesting a hearing, if any, and to the State involved. Notice of the hearing shall include a statement of the purpose of the hearing, information regarding the time and location or locations for the hearing and the address and telephone number of an office at which interested persons may obtain further information concerning the hearing. At least one hearing location specified in the public notice shall be within the involved State. Notice of hearing shall be given not less than 15 days prior to the time scheduled for the hearing.

(e) Hearings convened pursuant to paragraph (d) of this section shall be conducted before a hearing officer to be designated by the Administrator. The hearing shall be conducted by the hearing officer in an informal, orderly and expeditious manner. The hearing officer shall have authority to call witnesses, receive oral and written testimony and take such other action as may be necessary to assure the fair and efficient conduct of the hearing. Following the conclusion of the hearing, the hearing officer shall forward the record of the hearing to the Administrator.

(f) After reviewing the record of the hearing, the Administrator shall issue an order affirming the determination referred to in paragraph (a) of this section or rescinding such determination. If the determination is affirmed, it shall become effective as of the date of the Administrator's order.

(g) If no timely request for hearing is received and the Administrator does not determine to hold a hearing on his own motion, the Administrator's determination shall become effective 30 days after notice is issued pursuant to paragraph (b) of this section.

(h) If a determination of the Administrator that a State no longer meets the requirements for primary enforcement responsibility becomes effective, the State may subsequently apply for a determination that it meets such requirements by submitting to the Administrator information demonstrating that it has remedied the deficiencies found by the Administrator without adversely sacrificing other aspects of its program required for primary enforcement responsibility.

[41 FR 2918, Jan. 20, 1976, as amended at 54 FR 52140, Dec. 20, 1989; 60 FR 33661, June 28, 1995]

§ 142.14 Records kept by States.

(a) Each State which has primary enforcement responsibility shall maintain records of tests, measurements, analyses, decisions, and determinations performed on each public water system to determine compliance with applicable provisions of State primary drinking water regulations.

(1) Records of microbiological analyses shall be retained for not less than 1 year. Actual laboratory reports may be kept or data may be transferred to tabular summaries, provided that the information retained includes:

(i) The analytical method used;

(ii) The number of samples analyzed each month;

(iii) The analytical results, set forth in a form that makes possible comparison with the limits specified in §§ 141.63, 141.71, and 141.72 of this chapter and with the limits specified in subpart Y of this chapter.

(2) Records of microbiological analyses of repeat or special samples shall be retained for not less than one year in the form of actual laboratory reports or in an appropriate summary form.

(3) Records of turbidity measurements must be kept for not less than one year. The information retained must be set forth in a form which makes possible comparison with the limits specified in §§ 141.71, 141.73, 141.173 and 141.175, 141.550–141.553 and 141.560–141.564 of this chapter. Until June 29, 1993, for any public water system which is providing filtration treatment and until December 30, 1991, for any public water system not providing filtration treatment and not required by the State to provide filtration treatment, records kept must be set forth in a form which makes possible comparison with the limits contained in § 141.13 of this chapter.

(4)(i) Records of disinfectant residual measurements and other parameters necessary to document disinfection effectiveness in accordance with §§ 141.72

and 141.74 of this chapter and the reporting requirements of §§141.75, 141.175, and 141.570, of this chapter must be kept for not less than one year.

(ii) Records of decisions made on a system-by-system and case-by-case basis under provisions of part 141, subpart H, subpart P, or subpart T of this chapter, must be made in writing and kept by the State.

(A) Records of decisions made under the following provisions shall be kept for 40 years (or until one year after the decision is reversed or revised) and a copy of the decision must be provided to the system:

(*1*) Section 141.73(a)(1)—Any decision to allow a public water system using conventional filtration treatment or direct filtration to substitute a turbidity limit greater than 0.5 NTU;

(*2*) Section 141.73(b)(1)—Any decision to allow a public water system using slow sand filtration to substitute a turbidity limit greater than 1 NTU;

(*3*) Section 141.74(b)(2)—Any decision to allow an unfiltered public water system to use continuous turbidity monitoring;

(*4*) Section 141.74(b)(6)(i)—Any decision to allow an unfiltered public water system to sample residual disinfectant concentration at alternate locations if it also has ground water source(s);

(*5*) Section 141.74(c)(1)—Any decision to allow a public water system using filtration treatment to use continuous turbidity monitoring; or a public water system using slow sand filtration or filtration treatment other than conventional treatment, direct filtration or diatomaceous earth filtration to reduce turbidity sampling to once per day; or for systems serving 500 people or fewer to reduce turbidity sampling to once per day;

(*6*) Section 141.74(c)(3)(i)—Any decision to allow a filtered public water system to sample disinfectant residual concentration at alternate locations if it also has ground water source(s);

(*7*) Section 141.75(a)(2)(ix)—Any decision to allow reduced reporting by an unfiltered public water system;

(*8*) Section 141.75(b)(2)(iv)—Any decision to allow reduced reporting by a filtered public water system; and

(*9*) Section 141.76—Any decisions made to approve alternate recycle locations, require modifications to recycle return locations, or require modifications to recycle practices.

(B) Records of decisions made under the following provisions shall be kept for one year after the decision is made:

(*1*) Section 141.71(b)(1)(i)—Any decision that a violation of monthly CT compliance requirements was caused by circumstances that were unusual and unpredictable.

(*2*) Section 141.71(b)(1)(iv)—Any decision that a violation of the disinfection effectiveness criteria was not caused by a deficiency in treatment of the source water;

(*3*) Section 141.71(b)(5)—Any decision that a violation of the total coliform MCL was not caused by a deficiency in treatment of the source water;

(*4*) Section 141.74(b)(1)—Any decision that total coliform monitoring otherwise required because the turbidity of the source water exceeds 1 NTU is not feasible, except that if such decision allows a system to avoid monitoring without receiving State approval in each instance, records of the decision shall be kept until one year after the decision is rescinded or revised.

(C) Records of decisions made under the following provisions shall be kept for the specified period or 40 years, whichever is less.

(*1*) Section 141.71(a)(2)(i)—Any decision that an event in which the source water turbidity which exceeded 5 NTU for an unfiltered public water system was unusual and unpredictable shall be kept for 10 years.

(*2*) Section 141.71(b)(1)(iii)—Any decision by the State that failure to meet the disinfectant residual concentration requirements of §141.72(a)(3)(i) was caused by circumstances that were unusual and unpredictable, shall be kept unless filtration is installed. A copy of the decision must be provided to the system.

(*3*) Section 141.71(b)(2)—Any decision that a public water system's watershed control program meets the requirements of this section shall be kept until the next decision is available and filed.

(*4*) Section 141.70(c)—Any decision that an individual is a qualified operator for a public water system using a surface water source or a ground water

source under the direct influence of surface water shall be maintained until the qualification is withdrawn. The State may keep this information in the form of a list which is updated periodically. If such qualified operators are classified by category, the decision shall include that classification.

(*5*) Section 141.71(b)(3)—Any decision that a party other than the State is approved by the State to conduct on-site inspections shall be maintained until withdrawn. The State may keep this information in the form of a list which is updated periodically.

(*6*) Section 141.71(b)(4)—Any decision that an unfiltered public water system has been identified as the source of a waterborne disease outbreak, and, if applicable, that it has been modified sufficiently to prevent another such occurrence shall be kept until filtration treatment is installed. A copy of the decision must be provided to the system.

(*7*) Section 141.72—Any decision that certain interim disinfection requirements are necessary for an unfiltered public water system for which the State has determined that filtration is necessary, and a list of those requirements, shall be kept until filtration treatment is installed. A copy of the requirements must be provided to the system.

(*8*) Section 141.72(a)(2)(ii)—Any decision that automatic shut-off of delivery of water to the distribution system of an unfiltered public water system would cause an unreasonable risk to health or interfere with fire protection shall be kept until rescinded.

(*9*) Section 141.72(a)(4)(ii)—Any decision by the State, based on site-specific considerations, that an unfiltered system has no means for having a sample transported and analyzed for HPC by a certified laboratory under the requisite time and temperature conditions specified by §141.74(a)(3) and that the system is providing adequate disinfection in the distribution system, so that the disinfection requirements contained in §141.72(a)(4)(i) do not apply, and the basis for the decision, shall be kept until the decision is reversed or revised. A copy of the decision must be provided to the system.

(*10*) Section 141.72(b)(3)(ii)—Any decision by the State, based on site-specific conditions, that a filtered system has no means for having a sample transported and analyzed for HPC by a certified laboratory under the requisite time and temperature conditions specified by §141.74(a)(3) and that the system is providing adequate disinfection in the distribution system, so that the disinfection requirements contained in §141.72(b)(3)(i) do not apply, and the basis for the decision, shall be kept until the decision is reversed or revised. A copy of the decision must be provided to the system.

(*11*) Section 141.73(d)—Any decision that a public water system, having demonstrated to the State that an alternative filtration technology, in combination with disinfection treatment, consistently achieves 99.9 percent removal and/or inactivation of *Giardia lamblia* cysts and 99.99 percent removal and/or inactivation of viruses, may use such alternative filtration technology, shall be kept until the decision is reversed or revised. A copy of the decision must be provided to the system.

(*12*) Section 141.74(b), table 3.1—Any decision that a system using either preformed chloramines or chloramines formed by the addition of ammonia prior to the addition of chlorine has demonstrated that 99.99 percent removal and/or inactivation of viruses has been achieved at particular CT values, and a list of those values, shall be kept until the decision is reversed or revised. A copy of the list of required values must be provided to the system.

(*13*) Section 141.74(b)(3)(v)—Any decision that a system using a disinfectant other than chlorine may use $CT_{99.9}$ values other than those in tables 2.1 or 3.1 and/or other operational parameters to determine if the minimum total inactivation rates required by §141.72(a)(1) are being met, and what those values or parameters are, shall be kept until the decision is reversed or revised. A copy of the list of required values or parameters must be provided to the system.

(*14*) Section 142.16(b)(2)(i)(B)—Any decision that a system using a ground water source is under the direct influence of surface water.

(iii) Records of any determination that a public water system supplied by a surface water source or a ground water source under the direct influence of surface water is not required to provide filtration treatment shall be kept for 40 years or until withdrawn, whichever is earlier. A copy of the determination must be provided to the system.

(5) Records of each of the following decisions made pursuant to the total coliform provisions of part 141 shall be made in writing and retained by the State.

(i) Records of the following decisions must be retained for 5 years.

(A) Section 141.21(b)(1)—Any decision to waive the 24-hour time limit for collecting repeat samples after a total coliform-positive routine sample if the public water system has a logistical problem in collecting the repeat sample that is beyond the system's control, and what alternative time limit the system must meet.

(B) Section 141.21(b)(5)—Any decision to allow a system to waive the requirement for five routine samples the month following a total coliform-positive sample. If the waiver decision is made as provided in §141.21(b)(5), the record of the decision must contain all the items listed in that paragraph.

(C) Section 141.21(c)—Any decision to invalidate a total coliform-positive sample. If the decision to invalidate a total coliform-positive sample as provided in §141.21(c)(1)(iii) is made, the record of the decision must contain all the items listed in that paragraph.

(ii) Records of each of the following decisions must be retained in such a manner so that each system's current status may be determined.

(A) Section 141.21(a)(2)—Any decision to reduce the total coliform monitoring frequency for a community water system serving 1,000 persons or fewer, that has no history of total coliform contamination in its current configuration and had a sanitary survey conducted within the past five years showing that the system is supplied solely by a protected groundwater source and is free of sanitary defects, to less than once per month, as provided in §141.21(a)(2); and what the reduced monitoring frequency is. A copy of the reduced monitoring frequency must be provided to the system.

(B) Section 141.21(a)(3)(i)—Any decision to reduce the total coliform monitoring frequency for a non-community water system using only ground water and serving 1,000 persons or fewer to less than once per quarter, as provided in §141.21(a)(3)(i), and what the reduced monitoring frequency is. A copy of the reduced monitoring frequency must be provided to the system.

(C) Section 141.21(a)(3)(ii)—Any decision to reduce the total coliform monitoring frequency for a non-community water system using only ground water and serving more than 1,000 persons during any month the system serves 1,000 persons or fewer, as provided in §141.21(a)(3)(ii). A copy of the reduced monitoring frequency must be provided to the system.

(D) Section 141.21(a)(5)—Any decision to waive the 24-hour limit for taking a total coliform sample for a public water system which uses surface water, or ground water under the direct influence of surface water, and which does not practice filtration in accordance with part 141, subpart H, and which measures a source water turbidity level exceeding 1 NTU near the first service connection as provided in §141.21(a)(5).

(E) Section 141.21(d)(1)—Any decision that a non-community water system is using only protected and disinfected ground water and therefore may reduce the frequency of its sanitary survey to less than once every five years, as provided in §141.21(d), and what that frequency is. A copy of the reduced frequency must be provided to the system.

(F) Section 141.21(d)(2)—A list of agents other than the State, if any, approved by the State to conduct sanitary surveys.

(G) Section 141.21(e)(2)—Any decision to allow a public water system to forgo fecal coliform or *E. coli* testing on a total coliform-positive sample if that system assumes that the total coliform-positive sample is fecal coliform-positive or *E. coli*- positive, as provided in §141.21(e)(2).

(6) Records of analysis for other than microbiological contaminants (including total coliform, fecal coliform, and heterotrophic plate count), residual

disinfectant concentration, other parameters necessary to determine disinfection effectiveness (including temperature and pH measurements), and turbidity shall be retained for not less than 12 years and shall include at least the following information:

(i) Date and place of sampling.

(ii) Date and results of analyses.

(7) Any decisions made pursuant to the provisions of part 141, subpart P or subpart T of this chapter.

(i) Records of systems consulting with the State concerning a modification to disinfection practice under §§141.170(d), 141.172(c), and 141.542 of this chapter, including the status of the consultation.

(ii) Records of decisions that a system using alternative filtration technologies, as allowed under §§141.173(b) and §141.552 of this chapter, can consistently achieve a 99.9 percent removal and/or inactivation of *Giardia lamblia* cysts, 99.99 percent removal and/or inactivation of viruses, and 99 percent removal of *Cryptosporidium* oocysts. The decisions must include State-set enforceable turbidity limits for each system. A copy of the decision must be kept until the decision is reversed or revised. The State must provide a copy of the decision to the system.

(iii) Records of systems required to do filter self-assessment, CPE, or CCP under the requirements of §§141.175 and 141.563 of this chapter.

(8) Any decisions made pursuant to the provisions of 40 CFR part 141, subparts U and V of this part.

(i) IDSE monitoring plans, plus any modifications required by the State, must be kept until replaced by approved IDSE reports.

(ii) IDSE reports and 40/30 certifications, plus any modifications required by the State, must be kept until replaced or revised in their entirety.

(iii) Operational evaluations submitted by a system must be kept for 10 years following submission.

(9) Any decisions made pursuant to the provisions of part 141, subpart W of this chapter.

(i) Results of source water *E. coli* and *Cryptosporidium* monitoring.

(ii) The bin classification after the initial and after the second round of source water monitoring for each filtered system, as described in §141.710 of this chapter.

(iii) Any change in treatment requirements for filtered systems due to watershed assessment during sanitary surveys, as described in §141.711(d) of this chapter.

(iv) The determination of whether the mean *Cryptosporidium* level is greater than 0.01 oocysts/L after the initial and after the second round of source water monitoring for each unfiltered system, as described in §141.712(a) of this chapter.

(v) The treatment processes or control measures that systems use to meet their *Cryptosporidium* treatment requirements under §141.711 or §141.712 of this chapter.

(vi) A list of systems required to cover or treat the effluent of an uncovered finished water storage facility, as specified in §141.714 of this chapter.

(10) Records of each of the following decisions made pursuant to the provisions of subpart Y of part 141 must be made in writing and retained by the State.

(i) Records of the following decisions or activities must be retained for five years.

(A) Sections 141.858(a), 141.853(c)(2), 141.856(c), and 141.857(c) of this chapter—Any case-by-case decision to waive the 24-hour time limit for collecting repeat samples after a total coliform-positive routine sample, or to extend the 24-hour limit for collection of samples following invalidation, or for an unfiltered subpart H system of this part to collect a total coliform sample following a turbidity measurement exceeding 1 NTU.

(B) Sections 141.854(j) and 141.855(f) of this chapter—Any decision to allow a system to waive the requirement for three routine samples the month following a total coliform-positive sample. The record of the waiver decision must contain all the items listed in those sections.

(C) Section 141.853(c) of this chapter—Any decision to invalidate a total coliform-positive sample. If the decision to invalidate a total coliform-positive sample as provided in §141.853(c)(1) of this chapter is made, the record of the

decision must contain all the items listed in that section.

(D) Section 141.859 of this chapter—Completed and approved subpart Y assessments, including reports from the system that corrective action has been completed as required by §141.861(a)(2) of this chapter.

(ii) Records of each of the following decisions must be retained in such a manner so that each system's current status may be determined:

(A) Section 141.854(e) of this chapter—Any decision to reduce the total coliform monitoring frequency for a non-community water system using only ground water and serving 1,000 or fewer people to less than once per quarter, as provided in §141.854(e) of this chapter, including what the reduced monitoring frequency is. A copy of the reduced monitoring frequency must be provided to the system.

(B) Section 141.855(d) of this chapter—Any decision to reduce the total coliform monitoring frequency for a community water system serving 1,000 or fewer people to less than once per month, as provided in §141.855(d) of this chapter, including what the reduced monitoring frequency is. A copy of the reduced monitoring frequency must be provided to the system.

(C) Section 141.857(d) of this chapter—Any decision to reduce the total coliform monitoring frequency for a non-community water system using only ground water and serving more than 1,000 persons during any month the system serves 1,000 or fewer people, as provided in §141.857(d) of this chapter. A copy of the reduced monitoring frequency must be provided to the system.

(D) Section 141.858(b)(2) of this chapter—Any decision to allow a system to forgo *E. coli* testing of a total coliform-positive sample if that system assumes that the total coliform-positive sample is *E. coli*-positive.

(b) Records required to be kept pursuant to paragraph (a) of this section must be in a form admissible as evidence in State enforcement proceedings.

(c) Each State which has primary enforcement responsibility shall maintain current inventory information for every public water system in the State and shall retain inventory records of public water systems for not less than 12 years.

(d) Each State which has primary enforcement responsibility shall retain, for not less than 12 years, files which shall include for each such public water system in the State:

(1) Reports of sanitary surveys;

(2) Records of any State approvals;

(3) Records of any enforcement actions.

(4) A record of the most recent vulnerability determination, including the monitoring results and other data supporting the determination, the State's findings based on the supporting data and any additional bases for such determination; except that it shall be kept in perpetuity or until a more current vulnerability determination has been issued.

(5) A record of all current monitoring requirements and the most recent monitoring frequency decision pertaining to each contaminant, including the monitoring results and other data supporting the decision, the State's findings based on the supporting data and any additional bases for such decision; except that the record shall be kept in perpetuity or until a more recent monitoring frequency decision has been issued.

(6) A record of the most recent asbestos repeat monitoring determination, including the monitoring results and other data supporting the determination, the State's findings based on the supporting data and any additional bases for the determination and the repeat monitoring frequency; except that these records shall be maintained in perpetuity or until a more current repeat monitoring determination has been issued.

(7) Records of annual certifications received from systems pursuant to part 141, subpart K demonstrating the system's compliance with the treatment techniques for acrylamide and/or epichlorohydrin in §14.111.

(8) Records of the currently applicable or most recent State determinations, including all supporting information and an explanation of the technical basis for each decision, made under the following provisions of 40

CFR, part 141, subpart I for the control of lead and copper:

(i) Section 141.81(b)—for any water system deemed to be optimized under § 141.81(b)(1) or (b)(3) of this chapter, any conditions imposed by the State on specific water systems to ensure the continued operation and maintenance of corrosion control treatment in place;

(ii) Section 141.82(b)—decisions to require a water system to conduct corrosion control treatment studies;

(iii) Section 141.82(d)—designations of optimal corrosion control treatment;

(iv) Section 141.82(f)—designations of optimal water quality parameters;

(v) Section 141.82(h)—decisions to modify a public water system's optimal corrosion control treatment or water quality parameters;

(vi) Section 141.83(b)(2)—determinations of source water treatment;

(vii) Section 141.83(b)(4)—designations of maximum permissible concentrations of lead and copper in source water;

(viii) Section 141.84(e)—determinations establishing shorter lead service line service line replacement schedules under § 141.84;

(ix) Sections 141.81(b)(3)(iii), 141.86(d)(4)(vii), and 141.86(g)(4)(iii)—determinations of additional monitoring requirements and/or other actions required to maintain optimal corrosion control by systems monitoring for lead and copper at the tap less frequently than once every six months that change treatment or add a new source of water;

(x) Section 141.85—system-specific decisions regarding the content of written public education materials and/or the distribution of these materials;

(xi) Section 141.86(b)(5)—system-specific determinations regarding use of non-first-draw samples at non-transient non-community water systems, and community water systems meeting the criteria of § 141.85(b)(7)(i) and (ii) of this chapter, that operate 24 hours a day;

(xii) Section 141.86(c)—system-specific designations of sampling locations for systems subject to reduced monitoring;

(xiii) Section 141.86(d)(iv)(A)—system-specific determinations pertaining to alternative sample collection periods for systems subject to reduced monitoring;

(xiv) Section 141.86(g)—determinations of small system monitoring waivers, waiver recertifications, and waiver revocations;

(xv) Section 141.87(c)(3)—determinations regarding representative entry point locations at ground water systems;

(xvi) Section 141.90(e)(4)—system-specific determinations regarding the submission of information to demonstrate compliance with partial lead service line replacement requirements; and

(xvii) Section 141.90(f)—system-specific decisions regarding the resubmission of detailed documentation demonstrating completion of public education requirements.

(9) Records of reports and any other information submitted by PWSs under § 141.90 of this chapter, including records of any 90th percentile values calculated by the State under § 141.90(h) of this chapter.

(10) Records of State activities, and the results thereof, to:

(i) Verify compliance with State determinations issued under §§ 141.82(f) of this chapter, 141.82(h) of this chapter, 141.83(b)(2) of this chapter, and 141.83(b)(4) of this chapter;

(ii) Verify compliance with the requirements related to partial lead service line replacement under § 141.84(d) of this chapter and compliance with lead service line replacement schedules under § 141.84(e) of this chapter; and

(iii) Invalidate tap water lead and copper samples under § 141.86(f) of this chapter.

(11) Records of each system's currently applicable or most recently designated monitoring requirements. If, for the records identified in paragraphs (d)(8)(i) through (d)(8)(xvii) of this section, no change is made to State determinations during a 12-year retention period, the State shall retain the record until a new decision, determination, or designation has been issued.

(12) Records of the currently applicable or most recent State determinations, including all supporting information and an explanation of the technical basis for each decision, made under the following provisions of 40

CFR part 141, subpart L for the control of disinfectants and disinfection byproducts. These records must also include interim measures toward installation.

(i) States must keep records of systems that are installing GAC or membrane technology in accordance with §141.64(b)(2) of this chapter. These records must include the date by which the system is required to have completed installation.

(ii) States must keep records of systems that are required, by the State, to meet alternative minimum TOC removal requirements or for whom the State has determined that the source water is not amenable to enhanced coagulation in accordance with §141.135(b)(3) and (4) of this chapter, respectively. These records must include the alternative limits and rationale for establishing the alternative limits.

(iii) States must keep records of subpart H systems using conventional treatment meeting any of the alternative compliance criteria in §141.135(a)(2) or (3) of this chapter.

(iv) States must keep a register of qualified operators that have met the State requirements developed under §142.16(h)(2).

(13) Records of systems with multiple wells considered to be one treatment plant in accordance with §141.132(a)(2) of this chapter and §142.16(h)(5).

(14) Monitoring plans for subpart H systems serving more than 3,300 persons in accordance with §141.132(f) of this chapter.

(15) List of laboratories approved for analyses in accordance with §141.131(b) of this chapter.

(16) List of systems required to monitor for disinfectants and disinfection byproducts in accordance with part 141, subpart L of this chapter. The list must indicate what disinfectants and DBPs, other than chlorine, TTHM, and HAA5, if any, are measured.

(17) Records of the currently applicable or most recent State determination, including all supporting information and an explanation of the technical basis of each decision, made under the following provisions of 40 CFR part 141, subpart S and 40 CFR part 142.

(i) Section 142.16(o)(2)(v). Records of written notices of significant deficiencies.

(ii) Section 141.403(a)(5)(ii) of this chapter. Records of corrective action plans, schedule approvals, and State-specified interim measures.

(iii) Section 142.16(o)(4). Records of confirmations under §141.403(a) of this chapter that a significant deficiency has been corrected or the fecal contamination in the ground water source has been addressed.

(iv) Section 141.402(a)(5) of this chapter. Records of State determinations and records of ground water system's documentation for not conducting triggered source water monitoring.

(v) Section 141.402(d) of this chapter. Records of invalidations of fecal indicator-positive ground water source samples.

(vi) Section 141.402(a)(2)(ii) of this chapter. Records of State approvals of source water monitoring plans.

(vii) Section 142.16(o)(4)(ii). Records of notices of the minimum residual disinfection concentration (when using chemical disinfection) needed to achieve at least 4-log virus inactivation before or at the first customer.

(viii) Sections 142.16(o)(4)(iv) and 142.16(o)(4)(v) Records of notices of the State-specified monitoring and compliance requirements (when using membrane filtration or alternative treatment) needed to achieve at least 4-log treatment of viruses (using inactivation, removal, or a State-approved combination of 4-log inactivation and removal) before or at the first customer.

(ix) Sections 141.403(b)(1) and 141.403(b)(2) of this chapter. Records of written notices from the ground water system that it provides at least 4-log treatment of viruses (using inactivation, removal, or a State-approved combination of 4-log virus inactivation and removal) before or at the first customer for a ground water source.

(x) Section 142.16(o)(4)(vi). Records of written determinations that the ground water system may discontinue 4-log treatment of viruses (using inactivation, removal, or a State-approved combination of 4-log inactivation and removal).

(e) Each State which has primary enforcement responsibility shall retain records pertaining to each variance and exemption granted by it for a period of not less than 5 years following the expiration of such variance or exemption.

(f) Public notification records under subpart Q of part 141 of this chapter received from public water systems (including certifications of compliance and copies of public notices) and any state determinations establishing alternative public notification requirements for the water systems must be retained for three years.

(g) Records required to be kept under this section shall be available to the Regional Administrator upon request. The records required to be kept under this section shall be maintained and made available for public inspection by the State, or, the State at its option may require suppliers of water to make available for public inspection those records maintained in accordance with § 141.33.

[41 FR 2918, Jan. 20, 1976]

EDITORIAL NOTE: For FEDERAL REGISTER citations affecting § 142.14, see the List of CFR Sections Affected, which appears in the Finding Aids section of the printed volume and at *www.govinfo.gov*.

§ 142.15 Reports by States.

Each State which has primary enforcement responsibility shall submit to the Administrator the following information:

(a) Each State which has primary enforcement responsibility shall submit quarterly reports to the Administrator on a schedule and in a format prescribed by the Administrator, consisting of the following information:

(1) New violations by public water systems in the State during the previous quarter of State regulations adopted to incorporate the requirements of national primary drinking water regulations, including violations of the public notification requirements under subpart Q of part 141 of this chapter;

(2) New enforcement actions taken by the State during the previous quarter against public water systems with respect to State regulations adopted to incorporate the requirements of national primary drinking water regulations;

(3) Notification of any new variance or exemption granted during the previous quarter. The notice shall include a statement of reasons for the granting of the variance or exemption, including documentation of the need for the variance or exemption and the finding that the granting of the variance or exemption will not result in an unreasonable risk to health. The State may use a single notification statement to report two or more similar variances or exemptions.

(b) Each State which has primary enforcement responsibility shall submit annual reports to the Administrator on a schedule and in a format prescribed by the Administrator, consisting of the following information:

(1) All additions or corrections to the State's inventory of public water systems;

(2) A summary of the status of each variance and exemption currently in effect.

(c) *Special reports*—(1) *Surface Water Treatment Rule.* (i)(A) A list identifying the name, PWS identification number and date of the determination for each public water system supplied by a surface water source or a ground water source under the direct influence of surface water, which the State has determined is not required to provide filtration treatment.

(B) A list identifying the name and PWS identification number of each public water system supplied by a surface water source or ground water source under the direct influence of surface water, which the State has determined, based on an evaluation of site-specific considerations, has no means of having a sample transported and analyzed for HPC by a certified laboratory under the requisite time and temperature conditions specified in § 141.74(a)(3) and is providing adequate disinfection in the distribution system, regardless of whether the system is in compliance with the criteria of § 141.72 (a)(4)(i) or (b)(3)(i) of this chapter, as allowed by § 141.72 (a)(4)(ii) and (b)(3)(ii). The list must include the effective date of each determination.

(ii) Notification within 60 days of the end of the calendar quarter of any determination that a public water system using a surface water source or a ground water source under the direct influence of surface water is not required to provide filtration treatment. The notification must include a statement describing the system's compliance with each requirement of the State's regulations that implement §141.71 and a summary of comments, if any, received from the public on the determination. A single notification may be used to report two or more such determinations.

(2) *Total coliforms.* A list of public water systems which the State is allowing to monitor less frequently than once per month for community water systems or less frequently than once per quarter for non-community water systems as provided in §141.21(a), including the effective date of the reduced monitoring requirement for each system.

(3) *Total coliforms under subpart Y.* A list of systems that the State is allowing to monitor less frequently than once per month for community water systems or less frequently than once per quarter for non-community water systems as provided in §§141.855 and 141.854 of this chapter, including the applicable date of the reduced monitoring requirement for each system.

(4) States shall report quarterly, in a format and on a schedule prescribed by the Administrator, the following information related to each system's compliance with the treatment techniques for lead and copper under 40 CFR part 141, subpart I during the preceding calendar quarter. Specifically, States shall report as follows:

(i) For any reports provided prior to May 15, 2000, States shall report the name and PWS identification number:

(A) Each public water system which exceeded the lead and copper action levels and the date upon which the exceedance occurred;

(B) Each public water system required to complete the corrosion control evaluation specified in §141.82(c) and the date the State received the results of the evaluations from each system;

(C) Each public water system for which the State has designated optimal corrosion control treatment under §141.82(d), the date of the determination, and each system that completed installation of treatment as certified under §141.90(c)(3);

(D) Each public water system for which the State has designated optimal water quality parameters under §141.82(f) and the date of the determination;

(E) Each public water system which the State has required to install source water treatment under §141.83(b)(2), the date of the determination, and each system that completed installation of treatment as certified under §141.90(d)(2);

(F) Each public water system for which the State has specified maximum permissible source water levels under §141.83(b)(4); and

(G) Each public water system required to begin replacing lead service lines as specified in §141.84, each public water system for which the State has established a replacement schedule under §141.84(f), and each system reporting compliance with its replacement schedule under §141.90(e)(2).

(ii) For any reports provided after May 14, 2000 and before January 14, 2002, States may report in accordance with either paragraph (c)(4)(i) or (c)(4)(iii) of this section.

(iii) For all reports submitted on or after January 14, 2002, States shall report the PWS identification number of each public water system identified in paragraphs (c)(4)(iii)(A) through (F) of this section.

(A) For each large and medium-size public water system, all 90th percentile lead levels calculated during each monitoring period specified in §141.86 of this chapter, and the first and last day of the monitoring period for which the 90th percentile lead level was calculated;

(B) For each small public water system, the 90th percentile lead level calculated during each monitoring period in which the system exceeds the lead action level, and the first and last day of each monitoring period in which an exceedance occurred;

(C) For each public water system (regardless of size), the 90th percentile

copper level calculated during each monitoring period in which the system exceeds the copper action level, and the first and last day of each monitoring period in which an exceedance occurred;

(D) For each public water system for which the State has designated optimal water quality parameters under §141.82(f) of this chapter, or which the State has deemed to have optimized corrosion control under §141.81(b)(1) or (b)(3) of this chapter, the date of the determination and the paragraph(s) under which the State made its determination;

(E) For each public water system required to begin replacing lead service lines as specified in §141.84 of this chapter and the date each system must begin replacement; and

(F) For each public water system that has implemented optimal corrosion control, completed applicable source water treatment requirements pursuant to §141.83 of this chapter and/or completed lead service line replacement requirements pursuant to §141.84 of this chapter, and the date of the State's determination that these requirements have been met. The date reported shall be the latest of the following events:

(*1*) The date the State designates optimal water quality parameters under §141.82(f) of this chapter or deems the system to have optimized corrosion control pursuant to §141.81(b)(1) or (b)(3) of this chapter;

(*2*) For systems triggered into source water treatment, the date the State designates maximum permissible source water levels under §141.83(b)(4) of this chapter or determines pursuant to §141.83(b)(2) of this chapter that source water treatment is not required; or

(*3*) For systems triggered into lead service line replacement, the date the system completes lead service line replacement or becomes eligible to cease lead service line replacement pursuant to §141.84(f) of this chapter.

(5) *Sanitary surveys.* A list of subpart H systems that have had a sanitary survey completed during the previous year and an annual evaluation of the State's program for conducting sanitary surveys under §142.16(b)(3) of this chapter.

(6) *Subpart W.* (i) The bin classification after the initial and after the second round of source water monitoring for each filtered system, as described in §141.710 of this chapter.

(ii) Any change in treatment requirements for these systems due to watershed assessment during sanitary surveys, as described in §141.711(d) of this chapter.

(iii) The determination of whether the mean *Cryptosporidium* level is greater than 0.01 oocysts/L both after the initial and after the second round of source water monitoring for each unfiltered system, as described in §141.712(a) of this chapter.

(7) *Ground water rule*—(i) *Sanitary surveys.* The month and year in which the most recent sanitary survey was completed or, for a State that uses a phased review process, the date the last element of the applicable eight elements was evaluated under §142.16(o)(2) for each ground water system.

(ii) *Corrective action requirements.* For any corrective action under §141.403(a) of this chapter, the date the ground water system completed corrective action.

(iii) *Compliance monitoring.* All ground water systems providing at least 4-log treatment of viruses (using inactivation, removal, or a State-approved combination of 4-log virus inactivation and removal) before or at the first customer for any ground water source(s).

(d) The reports submitted pursuant to this section shall be made available by the State to the public for inspection at one or more locations within the State.

[41 FR 2918, Jan. 20, 1976]

EDITORIAL NOTE: For FEDERAL REGISTER citations affecting §142.15, see the List of CFR Sections Affected, which appears in the Finding Aids section of the printed volume and at *www.govinfo.gov.*

§142.16 Special primacy requirements.

(a) *State public notification requirements.* (1) Each State that has primary enforcement authority under this part must submit complete and final requests for approval of program revisions to adopt the requirements of subpart Q of part 141 of this chapter, using

the procedures in § 142.12(b) through (d). At its option, a State may, by rule, and after notice and comment, establish alternative public notification requirements with respect to the form and content of the public notice required under subpart Q of part 141 of this chapter. The alternative requirements must provide the same type and amount of information required under subpart Q and must meet the primacy requirements under § 142.10.

(2) As part of the revised primacy program, a State must also establish enforceable requirements and procedures when the State adds to or changes the requirements under:

(i) *Table 1 to 40 CFR 141.201(a)(Item (3)(v))*—To require public water systems to give a public notice for violations or situations other than those listed in appendix A of subpart Q of part 141 of this chapter;

(ii) *40 CFR 141.201(c)(2)*—To allow public water systems, under the specific circumstances listed in § 141.201(c)(2), to limit the distribution of the public notice to persons served by the portion of the distribution system that is out of compliance;

(iii) *Table 1 of 40 CFR 141.202(a) (Items (5), (6), and (9))*—To require public water systems to give a Tier 1 public notice (rather than a Tier 2 or Tier 3 notice) for violations or situations listed in appendix A of subpart Q of part 141 of this chapter;

(iv) *40 CFR 141.202(b)(3)*—To require public water systems to comply with additional Tier 1 public notification requirements set by the State subsequent to the initial 24-hour Tier 1 notice, as a result of their consultation with the State required under §§ 141.202(b)(2);

(v) *40 CFR 141.202(c), 141.203(c) and 141.204(c)*—To require a different form and manner of delivery for Tier 1, 2 and 3 public notices.

(vi) *Table 1 to 40 CFR 141.203(a) (Item (2))*—To require the public water systems to provide a Tier 2 public notice (rather than Tier (3)) for monitoring or testing procedure violations specified by the State;

(vii) *40 CFR 141.203(b)(1)*—To grant public water systems an extension up to three months for distributing the Tier 2 public notice in appropriate circumstances (other than those specifically excluded in the rule);

(viii) *40 CFR 141.203(b)(2)*—To grant a different repeat notice frequency for the Tier 2 public notice in appropriate circumstances (other than those specifically excluded in the rule), but no less frequently than once per year;

(ix) *40 CFR 141.203(b)(3)*—To respond within 24 hours to a request for consultation by the public water system to determine whether a Tier 1 (rather than a Tier 2) notice is required for a turbidity MCL violation under § 141.13(b) or a SWTR/IESWTR TT violation due to a single exceedance of the maximum allowable turbidity limit;

(x) *40 CFR 141.205(c)*—To determine the specific multilingual requirement for a public water system, including defining ''large proportion of non-English-speaking consumers.''

(b) *Requirements for States to adopt 40 CFR part 141, subpart H Filtration and Disinfection*. In addition to the general primacy requirements enumerated elsewhere in this part, including the requirement that State provisions are no less stringent than the federal requirements, an application for approval of a State program revision that adopts 40 CFR part 141, subpart H Filtration and Disinfection, must contain the information specified in this paragraph (b), except that States which require without exception all public water systems using a surface water source or a ground water source under the direct influence of surface water to provide filtration need not demonstrate that the State program has provisions that apply to systems which do not provide filtration treatment. However, such States must provide the text of the State statutes or regulations which specifies that all public water systems using a surface water source or a ground water source under the direct influence of surface water must provide filtration.

(1) *Enforceable requirements*. (i) In addition to adopting criteria no less stringent than those specified in part 141, subpart H of this chapter, the State's application must include enforceable design and operating criteria

for each filtration treatment technology allowed or a procedure for establishing design and operating conditions on a system-by-system basis (e.g., a permit system).

(ii) States must have the appropriate rules or other authority to assure that PWSs respond in writing to significant deficiencies outlined in sanitary survey reports required under paragraph (b)(3) of this section no later than 45 days after receipt of the report, indicating how and on what schedule the system will address significant deficiencies noted in the survey.

(iii) States must have the appropriate rules or other authority to assure that PWSs take necessary steps to address significant deficiencies identified in sanitary survey reports required under paragraph (b)(3) of this section, if such deficiencies are within the control of the PWS and its governing body.

(2) *State practices or procedures.* (i) A State application for program revision approval must include a description of how the State will accomplish the following:

(A) Section 141.70(c) (qualification of operators)—Qualify operators of systems using a surface water source or a ground water source under the direct influence of surface water.

(B) Determine which systems using a ground water source are under the direct influence of surface water by June 29, 1994 for community water systems and by June 29, 1999 for non-community water systems.

(C) Section 141.72(b)(1) (achieving required *Giardia lamblia* and virus removal in filtered systems)—Determine that the combined treatment process incorporating disinfection treatment and filtration treatment will achieve the required removal and/or inactivation of *Giardia lamblia* and viruses.

(D) Section 141.74(a) (State approval of parties to conduct analyses)—approve parties to conduct pH, temperature, turbidity, and residual disinfectant concentration measurements.

(E) Determine appropriate filtration treatment technology for source waters of various qualities.

(ii) For a State which does not require all public water systems using a surface water source or ground water source under the direct influence of surface water to provide filtration treatment, a State application for program revision approval must include a description of how the State will accomplish the following:

(A) Section 141.71(b)(2) (watershed control program)—Judge the adequacy of watershed control programs.

(B) Section 141.71(b)(3) (approval of on-site inspectors)—Approve on-site inspectors other than State personnel and evaluate the results of on-site inspections.

(iii) For a State which adopts any of the following discretionary elements of part 141 of this chapter, the application must describe how the State will:

(A) Section 141.72 (interim disinfection requirements)—Determine interim disinfection requirements for unfiltered systems which the State has determined must filter which will be in effect until filtration is installed.

(B) Section 141.72 (a)(4)(ii) and (b)(3)(ii) (determination of adequate disinfection in system without disinfectant residual)—Determine that a system is unable to measure HPC but is still providing adequate disinfection in the distribution system, as allowed by §141.72(a)(4)(ii) for systems which do not provide filtration treatment and §141.72(b)(3)(ii) for systems which do provide filtration treatment.

(C) Section 141.73 (a)(1) and (b)(1) (alternative turbidity limit)—Determine whether an alternative turbidity limit is appropriate and what the level should be as allowed by §141.73(a)(1) for a system using conventional filtration treatment or direct filtration and by §141.73(b)(1) for a system using slow sand filtration.

(D) Section 141.73(d) (alternative filtration technologies)—Determine that a public water system has demonstrated that an alternate filtration technology, in combination with disinfection treatment, achieves adequate removal and/or disinfection of *Giardia lamblia* and viruses.

(E) Section 141.74(a)(5) (alternate analytical method for chlorine)—Approve DPD colorimetric test kits for free and combined chlorine measurement or approve calibration of automated methods by the Indigo Method for ozone determination.

(F) Section 141.74 (b)(2) and (c)(1) (approval of continuous turbidity monitoring)—Approve continuous turbidity monitoring, as allowed by §141.74(b)(2) for a public water system which does not provide filtration treatment and §141.74(c)(1) for a system which does provide filtration treatment.

(G) Section 141.74 (b)(6)(i) and (c)(3)(i) (approval of alternate disinfectant residual concentration sampling plans)—Approve alternate disinfectant residual concentration sampling plans for systems which have a combined ground water and surface water or ground water and ground water under the direct influence of a surface water distribution system, as allowed by §141.74(b)(6)(i) for a public water system which does not provide filtration treatment and §141.74(c)(3)(i) for a public water system which does provide filtration treatment.

(H) Section 141.74(c)(1) (reduction of turbidity monitoring)—Decide whether to allow reduction of turbidity monitoring for systems using slow sand filtration, an approved alternate filtration technology or serving 500 people or fewer.

(I) Section 141.75 (a)(2)(ix) and (b)(2)(iv) (reduced reporting)—Determine whether reduced reporting is appropriate, as allowed by §141.75(a)(2)(ix) for a public water system which does not provide filtration treatment and §141.75(b)(2)(iv) for a public water system which does provide filtration treatment.

(iv) For a State which does not require all public water systems using a surface water source or ground water source under the direct influence of surface water to provide filtration treatment and which uses any of the following discretionary provisions, the application must describe how the State will:

(A) Section 141.71(a)(2)(i) (source water turbidity requirements)—Determine that an exceedance of turbidity limits in source water was caused by circumstances that were unusual and unpredictable.

(B) Section 141.71(b)(1)(i) (monthly CT compliance requirements)—Determine whether failure to meet the requirements for monthly CT compliance in §141.72(a)(1) was caused by circumstances that were unusual and unpredictable.

(C) Section 141.71(b)(1)(iii) (residual disinfectant concentration requirements)—Determine whether failure to meet the requirements for residual disinfectant concentration entering the distribution system in §141.72(a)(3)(i) was caused by circumstances that were unusual and unpredictable.

(D) Section 141.71(b)(1)(iv) (distribution system disinfectant residual concentration requirements)—Determine whether failure to meet the requirements for distribution system residual disinfectant concentration in §141.72(a)(4) was related to a deficiency in treatment.

(E) Section 141.71(b)(4) (system modification to prevent waterborne disease outbreak)—Determine that a system, after having been identified as the source of a waterborne disease outbreak, has been modified sufficiently to prevent another such occurrence.

(F) Section 141.71(b)(5) (total coliform MCL)—Determine whether a total coliform MCL violation was caused by a deficiency in treatment.

(G) Section 141.72(a)(1) (disinfection requirements)—Determine that different ozone, chloramine, or chlorine dioxide $CT_{99.9}$ values or conditions are adequate to achieve required disinfection.

(H) Section 141.72(a)(2)(ii) (shut-off of water to distribution system)—Determine whether a shut-off of water to the distribution system when the disinfectant residual concentration entering the distribution system is less than 0.2 mg/1 will cause an unreasonable risk to health or interfere with fire protection.

(I) Section 141.74(b)(1) (coliform monitoring)—Determine that coliform monitoring which otherwise might be required is not feasible for a system.

(J) Section 141.74(b), table 3.1 (disinfection with chloramines)—Determine the conditions to be met to insure 99.99 percent removal and/or inactivation of viruses in systems which use either preformed chloramines or chloramines for which ammonia is added to the water before chlorine, as allowed by table 3.1.

(3) *Sanitary survey*. In addition to the general requirements for sanitary surveys contained in §142.10(b)(2), an application must describe how the State will implement a sanitary survey program that meets the requirements in paragraphs (b)(3)(i) through (v) of this section. For the purposes of this paragraph, ''sanitary survey'' means an on-site review of the water source (identifying sources of contamination using results of source water assessments where available), facilities, equipment, operation, maintenance, and monitoring compliance of a public water system to evaluate the adequacy of the system, its sources and operations and the distribution of safe drinking water.

(i) The State must conduct sanitary surveys for all surface water systems (including groundwater under the influence) that address the eight sanitary survey components listed in paragraphs (b)(3)(i)(A) through (H) of this section no less frequently than every three years for community systems and no less frequently than every five years for noncommunity systems. The State may allow sanitary surveys conducted after December 1995 to serve as the first set of required sanitary surveys if the surveys address the eight sanitary survey components listed in paragraphs (b)(3)(i)(A) through (H) of this section.

(A) Source.

(B) Treatment.

(C) Distribution system.

(D) Finished water storage.

(E) Pumps, pump facilities, and controls.

(F) Monitoring and reporting and data verification.

(G) System management and operation.

(H) Operator compliance with State requirements.

(ii) For community systems determined by the State to have outstanding performance based on prior sanitary surveys, subsequent sanitary surveys may be conducted no less than every five years. In its primacy application, the State must describe how it will decide whether a system has outstanding performance and is thus eligible for sanitary surveys at a reduced frequency.

(iii) Components of a sanitary survey may be completed as part of a staged or phased state review process within the established frequency.

(iv) When conducting sanitary surveys for systems required to comply with the disinfection profiling requirements in §141.172 of this chapter, the State must also review the disinfection profile as part of the sanitary survey.

(v) In its primacy application, the State must describe how it will decide whether a deficiency identified during a sanitary survey is significant for the purposes of paragraph (b)(1)(ii) of this section.

(c) *Total coliform requirements*. In addition to meeting the general primacy requirements of this part, an application for approval of a State program revision that adopts the requirements of the national primary drinking water regulation for total coliforms must contain the following information:

(1) The application must describe the State's plan for determining whether sample siting plans are acceptable (including periodic reviews), as required by §141.21(a)(1).

(2) The national primary drinking water regulation for total coliforms in part 141 gives States the option to impose lesser requirements in certain circumstances, which are listed below. If a State chooses to exercise any of these options, its application for approval of a program revision must include the information listed below (the State need only provide the information listed for those options it has chosen to use).

(i) Section 141.21(a)(2) (Reduced monitoring requirements for community water systems serving 1,000 or fewer persons)—A description of how the State will determine whether it is appropriate to reduce the total coliform monitoring frequency for such systems using the criteria in §141.21(a)(2) and how it will determine the revised frequency.

(ii) Section 141.21(a)(3)(i) (Reduced monitoring requirements for non-community water systems using ground water and serving 1,000 persons or fewer)—A description of how the State will determine whether it is appropriate to reduce the total coliform monitoring frequency for such systems

using the criteria in §141.21(a)(3)(i) and how it will determine the revised frequency.

(iii) Section 141.21(a)(3)(ii) (Reduced monitoring for non-community water systems using ground water and serving more than 1,000 persons)—A description of how the State will determine whether it is appropriate to reduce the total coliform monitoring frequency for non-community water systems using only ground water and serving more than 1,000 persons during any month the system serves 1,000 persons or fewer and how it will determine the revised frequency.

(iv) Section 141.21(a)(5) (Waiver of time limit for sampling after a turbidity sampling result exceeds 1 NTU)—A description of how the State will determine whether it is appropriate to waive the 24-hour time limit.

(v) Section 141.21(b)(1) (Waiver of time limit for repeat samples)—A description of how the State will determine whether it is appropriate to waive the 24-hour time limit and how it will determine what the revised time limit will be.

(vi) Section 141.21(b)(3) (Alternative repeat monitoring requirements for systems with a single service connection)—A description of how the State will determine whether it is appropriate to allow a system with a single service connection to use an alternative repeat monitoring scheme, as provided in §141.21(b)(3), and what the alternative requirements will be.

(vii) Section 141.21(b)(5) (Waiver of requirement to take five routine samples the month after a system has a total coliform-positive sample)—A description of how the State will determine whether it is appropriate to waive the requirement for certain systems to collect five routine samples during the next month it serves water to the public, using the criteria in §141.21(b)(5).

(viii) Section 141.21(c) (Invalidation of total coliform-positive samples)—A description of how the State will determine whether it is appropriate to invalidate a total coliform-positive sample, using the criteria in §141.21(c).

(ix) Section 141.21(d) (Sanitary surveys)—A description of the State's criteria and procedures for approving agents other than State personnel to conduct sanitary surveys.

(x) Section 141.21(e)(2) (Waiver of fecal coliform or *E. coli* testing on a total coliform-positive sample)—A description of how the State will determine whether it is appropriate to waive fecal coliform or *E. coli* testing on a total coliform-positive sample.

(d) *Requirements for States to adopt 40 CFR part 141, subpart I—Control of Lead and Copper*. An application for approval of a State program revision which adopts the requirements specified in 40 CFR part 141, subpart I, must contain (in addition to the general primacy requirements enumerated elsewhere in this part, including the requirement that State regulations be at least as stringent as the federal requirements) a description of how the State will accomplish the following program requirements:

(1) Section 141.82—State designation of optimal corrosion control.

(i) Sections 141.82(d), 141.82(f), and 141.82(h)—Designating optimal corrosion control treatment methods, optimal water quality parameters, and modifications thereto.

(ii) Section 141.82(g)—Designating an alternative approach for aggregating multiple measurements collected during the same day for a water quality parameter at a sampling location, if the State elects to adopt a formula other than the one specified in §141.82(g)(1) of this chapter.

(2) Sections 141.83(b)(2) and 141.83(b)(4)—Designating source water treatment methods, maximum permissible source water levels for lead and copper and modifications thereto.

(3) Section 141.90(e)—Verifying compliance with lead service line replacement schedules and completion of all partial lead service line replacement activities.

(4) Section 141.86(d)(4)(iv)(A)—Designating an alternative period for sample collection for community water systems subject to reduced monitoring.

(e) An application for approval of a State program revision which adopts the requirements specified in §§141.11, 141.23, 141.24, 141.32, 141.61, and 141.62 for a newly regulated contaminant must contain the following (in addition to

the general primacy requirements enumerated elsewhere in this part, including the requirement that State regulations be at least as stringent as the Federal requirements):

(1) If a State chooses to issue waivers from the monitoring requirements in §§141.23 and 141.24, the State shall describe the procedures and criteria which it will use to review waiver applications and issue waiver determinations.

(i) The procedures for each contaminant or class of contaminants shall include a description of:

(A) The waiver application requirements;

(B) The State review process for ''use'' waivers and for ''susceptibility'' waivers; and

(C) The State decision criteria, including the factors that will be considered in deciding to grant or deny waivers. The decision criteria must include the factors specified in §§141.24(f)(8) and 141.24(h)(6).

(ii) The State must specify the monitoring data and other documentation required to demonstrate that the contaminant is eligible for a ''use'' and/or ''susceptibility'' waiver.

(2) A monitoring plan for the initial monitoring period by which the State will assure all systems complete the required initial monitoring within the regulatory deadlines.

NOTE: States may update their monitoring plan submitted under the Phase II Rule or simply note in their application that they will use the same monitoring plan for the Phase V Rule.

(i) The initial monitoring plan must describe how systems will be scheduled during the initial monitoring period and demonstrate that the analytical workload on certified laboratories for each of the three years has been taken into account, to assure that the State's plan will result in a high degree of monitoring compliance and that as a result there is a high probability of compliance and will be updated as necessary.

(ii) The State must demonstrate that the initial monitoring plan is enforceable under State law.

(f) *Consumer Confidence Report requirements.* (1) Each State that has primary enforcement responsibility must adopt the requirements of 40 CFR part 141, subpart O no later than August 21, 2000. States must submit revised programs to EPA for approval using the procedures in §142.12(b) through (d).

(2) Each State that has primary enforcement responsibility must make reports submitted to the States in compliance with 40 CFR 141.155(c) available to the public upon request.

(3) Each State that has primary enforcement responsibility must maintain a copy of the reports for a period of one year and the certifications obtained pursuant to 40 CFR 141.155(c) for a period of 5 years.

(4) Each State that has primary enforcement responsibility must report violations of this subpart in accordance with the requirements of §142.15(a)(1).

(g) *Requirements for States to adopt 40 CFR part 141, Subpart P—Enhanced Filtration and Disinfection—Systems Serving 10,000 or More People.* In addition to the general primacy requirements enumerated elsewhere in this part, including the requirement that State provisions are no less stringent than the Federal requirements, an application for approval of a State program revision that adopts 40 CFR part 141, Subpart P Enhanced Filtration and Disinfection—Systems Serving 10,000 or More People, must contain the information specified in this paragraph:

(1) *Enforceable requirements.* States must have the appropriate rules or other authority to require PWSs to conduct a Composite Correction Program (CCP) and to assure that PWSs implement any followup recommendations that result as part of the CCP. The CCP consists of two elements—a Comprehensive Performance Evaluation (CPE) and Comprehensive Technical Assistance (CTA). A CPE is a thorough review and analysis of a plant's performance-based capabilities and associated administrative, operation and maintenance practices. It is conducted to identify factors that may be adversely impacting a plant's capability to achieve compliance and emphasizes approaches that can be implemented without significant capital improvements. A CTA is the performance improvement phase that is implemented if the CPE results indicate improved performance potential. During

the CTA phase, the system must identify and systematically address plant-specific factors. The CTA is a combination of utilizing CPE results as a basis for followup, implementing process control priority-setting techniques and maintaining long-term involvement to systematically train staff and administrators.

(2) *State practices or procedures.* (i) Section 141.172(a)(3) of this chapter—How the State will approve a more representative annual data set than the data set determined under §141.172 (a)(1) or (2) of this chapter for the purpose of determining applicability of the requirements of §141.172 of this chapter.

(ii) Section 141.172(b)(5) of this chapter—How the State will approve a method to calculate the logs of inactivation for viruses for a system that uses either chloramines or ozone for primary disinfection.

(iii) Section 141.172(c) of this chapter—How the State will consult with PWSs to evaluate modifications to disinfection practice.

(iv) Section 141.173(b) of this chapter—For filtration technologies other than conventional filtration treatment, direct filtration, slow sand filtration, or diatomaceous earth filtration, how the State will determine that a public water system may use a filtration technology if the PWS demonstrates to the State, using pilot plant studies or other means, that the alternative filtration technology, in combination with disinfection treatment that meets the requirements of §141.172(b) of this chapter, consistently achieves 99.9 percent removal and/or inactivation of *Giardia lamblia* cysts and 99.99 percent removal and/or inactivation of viruses, and 99 percent removal of *Cryptosporidium* oocysts. For a system that makes this demonstration, how the State will set turbidity performance requirements that the system must meet 95 percent of the time and that the system may not exceed at any time at a level that consistently achieves 99.9 percent removal and/or inactivation of *Giardia lamblia* cysts, 99.99 percent removal and/or inactivation of viruses, and 99 percent removal of *Cryptosporidium* oocysts.

(h) *Requirements for States to adopt 40 CFR part 141, subpart L.* In addition to the general primacy requirements elsewhere in this part, including the requirement that State regulations be at least as stringent as federal requirements, an application for approval of a State program revision that adopts 40 CFR part 141, subpart L, must contain a description of how the State will accomplish the following program requirements:

(1) Section 141.64(b)(2) of this chapter (interim treatment requirements). Determine any interim treatment requirements for those systems electing to install GAC or membrane filtration and granted additional time to comply with §141.64 of this chapter.

(2) Section 141.130(c) of this chapter (qualification of operators). Qualify operators of public water systems subject to 40 CFR part 141, subpart L. Qualification requirements established for operators of systems subject to 40 CFR part 141, subpart H—Filtration and Disinfection may be used in whole or in part to establish operator qualification requirements for meeting 40 CFR part 141, subpart L requirements if the State determines that the 40 CFR part 141, subpart H requirements are appropriate and applicable for meeting subpart L requirements.

(3) Section 141.131(c)(2) of this chapter (DPD colorimetric test kits). Approve DPD colorimetric test kits for free and total chlorine measurements. State approval granted under §141.74(a)(2) of this chapter for the use of DPD colorimetric test kits for free chlorine testing is acceptable for the use of DPD test kits in measuring free chlorine residuals as required in 40 CFR part 141, subpart L.

(4) Sections 141.131(c)(3) and (d) of this chapter (State approval of parties to conduct analyses). Approve parties to conduct pH, bromide, alkalinity, and residual disinfectant concentration measurements. The State's process for approving parties performing water quality measurements for systems subject to 40 CFR part 141, subpart H requirements in paragraph (b)(2)(i)(D) of this section may be used for approving

parties measuring water quality parameters for systems subject to subpart L requirements, if the State determines the process is appropriate and applicable.

(5) Section 141.132(a)(2) of this chapter (multiple wells as a single source). Define the criteria to use to determine if multiple wells are being drawn from a single aquifer and therefore be considered a single source for compliance with monitoring requirements.

(6) Approve alternate minimum TOC removal (Step 2) requirements, as allowed under the provisions of §141.135(b) of this chapter.

(i) *Requirements for States to adopt 40 CFR part 141, §141.76 Recycle provisions.* In addition to the general primacy requirements enumerated elsewhere in this part, including the requirement that the State provisions are no less stringent than the federal requirements, an application for approval of a State program revision that adopts 40 CFR part 141, §141.76 Recycle Provisions must contain the information specified in this paragraph:

(1) *State practices or procedures.* (i) Section 141.76(d) of this chapter—States must have the proper rules and authority to use Sanitary Surveys, comprehensive performance evaluations (CPEs), other inspections, or other activities to evaluate recycle data maintained by systems under §141.76(d) of this chapter and require modifications to recycle practices.

(ii) [Reserved]

(2) [Reserved]

(j) An application for approval of a State program revision which adopts the requirements specified in §§141.11, 141.23, 141.24, 141.32, 141.61 and 141.62 for an existing regulated contaminant must contain the following (in addition to the general primacy requirements enumerated elsewhere in this part, including the requirement that State regulations be at least as stringent as the federal requirements):

(1) If a State chooses to issue waivers from the monitoring requirements in §§141.23 and 141.24, the State shall describe the procedures and criteria, that it will use to review waiver applications and issue waiver determinations. The State shall provide the same information required in paragraph (e)(1)(i) and (ii) of this section. States may update their existing waiver criteria or use the requirements submitted under the National Primary Drinking Water Regulations for the inorganic and organic contaminants (*i.e.*, Phase II/V rule) in 16(e) of this section. States may simply note in their application any revisions to existing waiver criteria or note that the same procedures to issue waivers will be used.

(2) A monitoring plan by which the State will ensure all systems complete the required monitoring by the regulatory deadlines. States may update their existing monitoring plan or use the same monitoring plan submitted under the National Primary Drinking Water Regulations for the inorganic and organic contaminants (*i.e.*, Phase II/V rule) in 16(e) of this section. States may simply note in their application any revisions to an existing monitoring plan or note that the same monitoring plan will be used. The State must demonstrate that the monitoring plan is enforceable under State law.

(k) States establish the initial monitoring requirements for new systems and new sources. States must explain their initial monitoring schedules and how these monitoring schedules ensure that public water systems and sources comply with MCL's and monitoring requirements. States must also specify the time frame in which new systems will demonstrate compliance with the MCLs.

(l) An application for approval of a State program revision for radionuclides which adopts the requirements specified in §141.26(a)(2)(ii)(C) of this chapter must contain the following (in addition to the general primacy requirements enumerated in this part, including that State regulations be at least as stringent as the Federal requirements):

(1) If a State chooses to use grandfathered data in the manner described in §141.26(a)(2)(ii)(C) of this chapter, then the State must describe the procedures and criteria which it will use to make these determinations (whether distribution system or entry point sampling points are used).

(i) The decision criteria that the State will use to determine that data collected in the distribution system are

representative of the drinking water supplied from each entry point to the distribution system. These determinations must consider:

(A) All previous monitoring data.

(B) The variation in reported activity levels.

(C) Other factors affecting the representativeness of the data (e.g. geology).

(ii) [Reserved]

(2) A monitoring plan by which the State will assure all systems complete the required monitoring within the regulatory deadlines. States may update their existing monitoring plan or use the same monitoring plan submitted for the requirements in §142.16(e)(2) under the national primary drinking water regulations for the inorganic and organic contaminants (*i.e.* the phase II/V rules). States may note in their application any revision to an existing monitoring plan or note that the same monitoring plan will be used. The State must demonstrate that the monitoring plan is enforceable under State law.

(m) *Requirements for States to adopt 40 CFR part 141, subparts U and V.* In addition to the general primacy requirements elsewhere in this part, including the requirements that State regulations be at least as stringent as federal requirements, an application for approval of a State program revision that adopts 40 CFR part 141, subparts U and V, must contain a description of how the State will implement a procedure for addressing modification of wholesale system and consecutive system monitoring on a case-by-case basis for part 141 subpart V outside the provisions of §141.29 of this chapter, if the State elects to use such an authority. The procedure must ensure that all systems have at least one compliance monitoring location.

(n) *Requirements for States to adopt 40 CFR part 141, subpart W.* In addition to the general primacy requirements elsewhere in this part, including the requirements that State regulations be at least as stringent as Federal requirements, an application for approval of a State program revision that adopts 40 CFR part 141, subpart W, must contain a description of how the State will accomplish the following program requirements where allowed in State programs.

(1) Approve an alternative to the *E. coli* levels that trigger *Cryptosporidium* monitoring by filtered systems serving fewer than 10,000 people, as described in §141.701(a)(5).

(2) Assess significant changes in the watershed and source water as part of the sanitary survey process and determine appropriate follow-up action for systems, as described in §141.711(d) of this chapter.

(3) Approve watershed control programs for the 0.5-log treatment credit in the microbial toolbox, as described in §141.716(a) of this chapter.

(4) Approve protocols for demonstration of performance treatment credits in the microbial toolbox, as allowed under §141.718(c) of this chapter.

(5) Approve protocols for alternative ozone and chlorine dioxide CT values in the microbial toolbox, as allowed under §141.720(c) of this chapter.

(6) Approve an alternative approach to UV reactor validation testing in the microbial toolbox, as allowed under §141.720(d)(2)(iii) of this chapter.

(o) *Requirements for States to adopt 40 CFR part 141, subpart S.* In addition to the general primacy requirements specified elsewhere in this part, including the requirement that State regulations are no less stringent than the Federal requirements, an application for approval of a State program revision that adopts 40 CFR part 141, subpart S, must contain the information specified in this paragraph (o).

(1) *Legal authority.* The application for primacy must demonstrate the State has:

(i) The authority contained in statute or regulation to ensure that ground water systems conduct source water monitoring under §§141.402(a)(2), 141.402(a)(3) and 141.402(a)(4)(ii)(A) of this chapter.

(ii) The authority contained in statute or regulation to ensure that ground water systems take the appropriate corrective actions including interim measures, if necessary, needed to address significant deficiencies.

(iii) The authority contained in statute or regulation to ensure that ground water systems take the appropriate corrective actions, including interim

measures if necessary, to address any source water fecal contamination identified during source water monitoring under § 141.402 of this chapter.

(iv) The authority contained in statute or regulation to ensure that ground water systems consult with the State regarding corrective action(s).

(2) *State practices or procedures for sanitary surveys.* In addition to the general requirements for sanitary surveys contained in § 142.10(b)(2), a primacy application must describe how the State will implement a sanitary survey program that meets the requirements of paragraph (o)(2)(i) of this section. A ''sanitary survey,'' as conducted by the State, includes but is not limited to, an onsite review of the water source(s) (identifying sources of contamination by using results of source water assessments or other relevant information where available), facilities, equipment, operation, maintenance, and monitoring compliance of a public water system to evaluate the adequacy of the system, its sources and operations and the distribution of safe drinking water.

(i) The State must conduct sanitary surveys that address the eight sanitary survey components listed in this section no less frequently than every three years for community water systems, except as provided in paragraph (o)(2)(iii) of this section, and every five years for non-community water systems. The State may conduct more frequent sanitary surveys for any system. The initial sanitary survey for each community water system must be conducted by December 31, 2012, unless the system meets the requirements of paragraph (o)(2)(iii) of this section. The initial sanitary survey for each community water system that meets the requirements of paragraph (o)(2)(iii) of this section and for each non-community water system must be conducted by December 31, 2014. The sanitary survey must include an evaluation of each of the following elements as applicable:

(A) Source,

(B) Treatment,

(C) Distribution system,

(D) Finished water storage,

(E) Pumps, pump facilities, and controls,

(F) Monitoring, reporting, and data verification,

(G) System management and operation, and

(H) Operator compliance with State requirements.

(ii) The State may use a phased review process to meet the requirements of (o)(2)(i) of this section if all the applicable elements of paragraphs (o)(2)(i)(A) through (o)(2)(i)(H) of this section are evaluated within the required interval.

(iii) The State may conduct sanitary surveys once every five years for community water systems if the system either provides at least 4-log treatment of viruses (using inactivation, removal, or a State-approved combination of 4-log inactivation and removal) before or at the first customer for all its ground water sources, or if it has an outstanding performance record, as determined by the State and documented in previous sanitary surveys and has no history of total coliform MCL or monitoring violations under § 141.21 of this chapter since the last sanitary survey. In its primacy application, the State must describe how it will determine whether a community water system has an outstanding performance record.

(iv) The State must define and describe in its primacy application at least one specific significant deficiency in each of the eight sanitary survey elements in paragraphs (o)(2)(i)(A) through (o)(2)(i)(H) of this section. Significant deficiencies include, but are not limited to, defects in design, operation, or maintenance, or a failure or malfunction of the sources, treatment, storage, or distribution system that the State determines to be causing, or have potential for causing, the introduction of contamination into the water delivered to consumers.

(v) As a condition of primacy, the State must provide ground water systems with written notice describing any significant deficiencies no later than 30 days after the State identifies the significant deficiency. The notice may specify corrective actions and deadlines for completion of corrective actions. The State may provide the written notice at the time of the sanitary survey.

(3) *State practices or procedures for source water microbial monitoring.* The

State's primacy application must include a description of the following:

(i) The criteria the State will use under §§ 141.402(a)(2)(i) and 141.402(d)(2) of this chapter for extending the 24-hour time limit for a system to collect a ground water source sample to comply with the source water monitoring requirements.

(ii) The criteria the State will use under §§ 141.402(a)(5)(i) and 141.402(a)(5)(ii) of this chapter to determine whether the cause of the total coliform-positive sample taken under § 141.21(a) of this chapter is directly related to the distribution system.

(iii) The criteria the State will use for determining whether to invalidate a fecal indicator-positive ground water source sample under § 141.402(d)(1)(ii) of this chapter.

(iv) The criteria the State will use to allow source water microbial monitoring at a location after treatment under § 141.402(e)(1) of this chapter.

(4) *State practices or procedures for treatment technique requirements.* As a condition of primacy, the State must verify that significant deficiencies or source water fecal contamination have been addressed. The State must verify within 30 days after the ground water system has reported to the State that it has completed corrective action. The State must verify either through written confirmation from the ground water system or a site visit by the State. Written notice from the ground water system under § 141.405(a)(2) of this chapter may serve as this verification. The State's primacy application must include the following:

(i) The process the State will use to determine that a ground water system achieves at least a 4-log treatment of viruses (using inactivation, removal, or a combination of inactivation and removal) before or at the first customer for a ground water source for systems that are not subject to the source water monitoring requirements of § 141.402(a) of this chapter because the ground water system has informed the State that it provides at least 4-log treatment of viruses.

(ii) The process the State will use to determine the minimum residual disinfectant concentration the system must provide prior to the first customer for systems using chemical disinfection.

(iii) The State-approved alternative technologies that ground water systems may use alone or in combination with other approved technologies to achieve at least 4-log treatment of viruses (using inactivation, removal, or a State-approved combination of 4-log inactivation and removal) before or at the first customer for a ground water source.

(iv) The monitoring and compliance requirements the State will require for ground water systems treating to at least 4-log treatment of viruses (using inactivation, removal, or a State-approved combination of inactivation and removal) before or at the first customer for State-approved alternative treatment technologies.

(v) The monitoring, compliance and membrane integrity testing requirements the State will require to demonstrate virus removal for ground water systems using membrane filtration technologies.

(vi) The criteria, including public health-based considerations and incorporating on-site investigations and source water monitoring results the State will use to determine if a ground water system may discontinue 4-log treatment of viruses (using inactivation, removal, or a State-approved combination of inactivation and removal) before or at the first customer.

(p) *Requirements for States to adopt 40 CFR part 141, Subpart T—Enhanced Filtration and Disinfection—Systems Serving Fewer Than 10,000 People.* In addition to the general primacy requirements enumerated elsewhere in this part, including the requirement that State provisions are no less stringent than the Federal requirements, an application for approval of a State program revision that adopts 40 CFR part 141, Subpart T—Enhanced Filtration and Disinfection—Systems Serving Fewer than 10,000 People, must contain the information specified in this paragraph:

(1) *Enforceable requirements.* States must have rules or other authority to require systems to participate in a Comprehensive Technical Assistance (CTA) activity, the performance improvement phase of the Composite Correction Program (CCP). The State

must determine whether a CTA must be conducted based on results of a CPE which indicate the potential for improved performance, and a finding by the State that the system is able to receive and implement technical assistance provided through the CTA. A CPE is a thorough review and analysis of a system's performance-based capabilities and associated administrative, operation and maintenance practices. It is conducted to identify factors that may be adversely impacting a plant's capability to achieve compliance. During the CTA phase, the system must identify and systematically address factors limiting performance. The CTA is a combination of utilizing CPE results as a basis for follow-up, implementing process control priority-setting techniques and maintaining long-term involvement to systematically train staff and administrators.

(2) *State practices or procedures.* (i) Section 141.530–141.536—How the State will approve a more representative data set for optional TTHM and HAA5 monitoring and profiling.

(ii) Section 141.535 of this chapter—How the State will approve a method to calculate the logs of inactivation for viruses for a system that uses either chloramines, ozone, or chlorine dioxide for primary disinfection.

(iii) Section 141.542 of this chapter—How the State will consult with the system and approve significant changes to disinfection practices.

(iv) Section 141.552 of this chapter—For filtration technologies other than conventional filtration treatment, direct filtration, slow sand filtration, or diatomaceous earth filtration, how the State will determine that a public water system may use a filtration technology if the PWS demonstrates to the State, using pilot plant studies or other means, that the alternative filtration technology, in combination with disinfection treatment that meets the requirements of §141.72(b) of this chapter, consistently achieves 99.9 percent removal and/or inactivation of *Giardia lamblia* cysts and 99.99 percent removal and/or inactivation of viruses, and 99 percent removal of *Cryptosporidium* oocysts. For a system that makes this demonstration, how the State will set turbidity performance requirements that the system must meet 95 percent of the time and that the system may not exceed at any time at a level that consistently achieves 99.9 percent removal and/or inactivation of *Giardia lamblia* cysts, 99.99 percent removal and/or inactivation of viruses, and 99 percent removal of *Cryptosporidium* oocysts.

(q) *Requirements for States to adopt 40 CFR part 141 subpart Y—Revised Total Coliform Rule.* In addition to the general primacy requirements elsewhere in this part, including the requirements that State regulations be at least as stringent as federal requirements, an application for approval of a State program revision that adopts 40 CFR part 141, subpart Y, must contain the information specified in this paragraph (q).

(1) In their application to EPA for approval to implement the federal requirements, the primacy application must indicate what baseline and reduced monitoring provisions of 40 CFR part 141, subpart Y the State will adopt and must describe how they will implement 40 CFR part 141, subpart Y in these areas so that EPA can be assured that implementation plans meet the minimum requirements of the rule.

(2) The State's application for primacy for subpart Y must include a written description for each provision included in paragraphs (q)(2)(i) through (ix) of this section.

(i) Sample Siting Plans—The frequency and process used to review and revise sample siting plans in accordance with 40 CFR part 141, subpart Y to determine adequacy.

(ii) Reduced Monitoring Criteria—An indication of whether the State will adopt the reduced monitoring provisions of 40 CFR part 141, subpart Y. If the State adopts the reduced monitoring provisions, it must describe the specific types or categories of water systems that will be covered by reduced monitoring and whether the State will use all or a reduced set of the criteria specified in §§141.854(h)(2) and 141.855(d)(1)(iii) of this chapter. For each of the reduced monitoring criteria, the State must describe how the criterion will be evaluated to determine when systems qualify.

(iii) Assessments and Corrective Actions—The process for implementing the new assessment and corrective action phase of the rule, including the elements in paragraphs (q)(2)(iii)(A) through (D) of this section.

(A) Elements of Level 1 and Level 2 assessments. This must include an explanation of how the State will ensure that Level 2 assessments provide a more detailed examination of the system (including the system's monitoring and operational practices) than do Level 1 assessments through the use of more comprehensive investigation and review of available information, additional internal and external resources, and other relevant practices.

(B) Examples of sanitary defects.

(C) Examples of assessment forms or formats.

(D) Methods that systems may use to consult with the State on appropriate corrective actions.

(iv) Invalidation of routine and repeat samples collected under 40 CFR part 141, subpart Y—The criteria and process for invalidating total coliform and *E. coli*-positive samples under 40 CFR part 141, subpart Y. This description must include criteria to determine if a sample was improperly processed by the laboratory, reflects a domestic or other non-distribution system plumbing problem or reflects circumstances or conditions that do not reflect water quality in the distribution system.

(v) Approval of individuals allowed to conduct Level 2 assessments under 40 CFR part 141, subpart Y—The criteria and process for approval of individuals allowed to conduct Level 2 assessments under 40 CFR part 141, subpart Y.

(vi) Special monitoring evaluation—The procedure for performing special monitoring evaluations during sanitary surveys for ground water systems serving 1,000 or fewer people to determine whether systems are on an appropriate monitoring schedule.

(vii) Seasonal systems—How the State will identify seasonal systems, how the State will determine when systems on less than monthly monitoring must monitor, and what start-up provisions seasonal system must meet under 40 CFR part 141, subpart Y.

(viii) Additional criteria for reduced monitoring—How the State will require systems on reduced monitoring to demonstrate:

(A) Continuous disinfection entering the distribution system and a residual in the distribution system.

(B) Cross connection control.

(C) Other enhancements to water system barriers.

(ix) Criteria for extending the 24-hour period for collecting repeat samples.—Under §§141.858(a) and 141.853(c)(2) of this chapter, criteria for systems to use in lieu of case-by-case decisions to waive the 24-hour time limit for collecting repeat samples after a total coliform-positive routine sample, or to extend the 24-hour limit for collection of samples following invalidation. If the State elects to use only case-by-case waivers, the State does not need to develop and submit criteria.

[54 FR 15188, Apr. 17, 1989]

EDITORIAL NOTE: For FEDERAL REGISTER citations affecting §142.16, see the List of CFR Sections Affected, which appears in the Finding Aids section of the printed volume and at *www.govinfo.gov*.

§ 142.17 Review of State programs and procedures for withdrawal of approved primacy programs.

(a)(1) At least annually the Administrator shall review, with respect to each State determined to have primary enforcement responsibility, the compliance of the State with the requirements set forth in 40 CFR part 142, subpart B, and the approved State primacy program. At the time of this review, the State shall notify the Administrator of any State-initiated program changes (*i.e.*, changes other than those to adopt new or revised EPA regulations), and of any transfer of all or part of its program from the approved State agency to any other State agency.

(2) When, on the basis of the Administrator's review or other available information, the Administrator determines that a State no longer meets the requirements set forth in 40 CFR part 142, subpart B, the Administrator shall initiate proceedings to withdraw primacy approval. Among the factors the Administrator intends to consider as relevant to this determination are the following, where appropriate: whether

the State has requested and has been granted, or is awaiting EPA's decision on, an extension under § 142.12(b)(2) of the deadlines for meeting those requirements; and whether the State is taking corrective actions that may have been required by the Administrator. The Administrator shall notify the State in writing that EPA is initiating primacy withdrawal proceedings and shall summarize in the notice the information available that indicates that the State no longer meets such requirements.

(3) The State notified pursuant to paragraph (a)(2) of this section may, within 30 days of receiving the Administrator's notice, submit to the Administrator evidence demonstrating that the State continues to meet the requirements for primary enforcement responsibility.

(4) After reviewing the submission of the State, if any, made pursuant to paragraph (a)(3) of this section, the Administrator shall make a final determination either that the State no longer meets the requirements of 40 CFR part 142, subpart B, or that the State continues to meet those requirements, and shall notify the State of his or her determination. Any final determination that the State no longer meets the requirements of 40 CFR part 142, subpart B, shall not become effective except as provided in § 142.13.

(b) If a State which has primary enforcement responsibility decides to relinquish that authority, it may do so by notifying the Administrator in writing of the State's decision at least 90 days before the effective date of the decision.

[54 FR 52140, Dec. 20, 1989, as amended at 60 FR 33661, June 28, 1995]

§ 142.18 EPA review of State monitoring determinations.

(a) A Regional Administrator may annul a State monitoring determination for the types of determinations identified in §§ 141.23(b), 141.23(c), 141.24(f), 141.24(h), and 141.40(n) in accordance with the procedures in paragraph (b) of this section.

(b) When information available to a Regional Administrator, such as the results of an annual review, indicate a State determination fails to apply the standards of the approved State program, he may propose to annul the State monitoring determination by sending the State and the affected PWS a draft Rescission Order. The draft order shall:

(1) Identify the PWS, the State determination, and the provisions at issue;

(2) Explain why the State determination is not in compliance with the State program and must be changed; and

(3) Describe the actions and terms of operation the PWS will be required to implement.

(c) The State and PWS shall have 60 days to comment on the draft Rescission Order.

(d) The Regional Administrator may not issue a Rescission Order to impose conditions less stringent than those imposed by the State.

(e) The Regional Administrator shall also provide an opportunity for comment upon the draft Rescission Order, by

(1) Publishing a notice in a newspaper in general circulation in communities served by the affected system; and

(2) Providing 30 days for public comment on the draft order.

(f) The State shall demonstrate that the determination is reasonable, based on its approved State program.

(g) The Regional Administrator shall decide within 120 days after issuance of the draft Rescission Order to:

(1) Issue the Rescission Order as drafted;

(2) Issue a modified Rescission Order; or

(3) Cancel the Rescission Order.

(h) The Regional Administrator shall set forth the reasons for his decision, including a responsiveness summary addressing significant comments from the State, the PWS and the public.

(i) The Regional Administrator shall send a notice of his final decision to the State, the PWS and all parties who commented upon the draft Rescission Order.

(j) The Rescission Order shall remain in effect until cancelled by the Regional Administrator. The Regional Administrator may cancel a Rescission

Order at any time, so long as he notifies those who commented on the draft order.

(k) The Regional Administrator may not delegate the signature authority for a final Rescission Order or the cancellation of an order.

(l) Violation of the actions, or terms of operation, required by a Rescission Order is a violation of the Safe Drinking Water Act.

[56 FR 3595, Jan. 30, 1991]

§ 142.19 EPA review of State implementation of national primary drinking water regulations for lead and copper.

(a) Pursuant to the procedures in this section, the Regional Administrator may review state determinations establishing corrosion control or source water treatment requirements for lead or copper and may issue an order establishing federal treatment requirements for a public water system pursuant to § 141.82 (d) and (f) and § 141.83(b) (2) and (4) where the Regional Administrator finds that:

(1) A State has failed to issue a treatment determination by the applicable deadline;

(2) A State has abused its discretion in making corrosion control or source water treatment determinations in a substantial number of cases or in cases affecting a substantial population, or

(3) The technical aspects of State's determination would be indefensible in an expected federal enforcement action taken against a system.

(b) If the Regional Administrator determines that review of state determination(s) under this section may be appropriate, he shall request the State to forward to EPA the state determination and all information that was considered by the State in making its determination, including public comments, if any, within 60 days of the Regional Adminstrator's request.

(c) Proposed review of state determinations:

(1) Where the Regional Administrator finds that review of a state determination under paragraph (a) of this section is appropriate, he shall issue a proposed review order which shall:

(i) Identify the public water system(s) affected, the State determination being reviewed and the provisions of state and/or federal law at issue;

(ii) Identify the determination that the State failed to carry out by the applicable deadline, or identify the particular provisions of the State determination which, in the Regional Administrator's judgment, fail to carry out properly applicable treatment requirements, and explain the basis for the Regional Administrator's conclusion;

(iii) Identify the treatment requirements which the Regional Administrator proposes to apply to the affected system(s), and explain the basis for the proposed requirements;

(iv) Request public comment on the proposed order and the supporting record.

(2) The Regional Administrator shall provide notice of the proposed review order by:

(i) Mailing the proposed order to the affected public water system(s), the state agency whose order is being reviewed, and any other parties of interest known to the Regional Administrator; and

(ii) Publishing a copy of the proposed order in a newspaper of general circulation in the affected communities.

(3) The Regional Administrator shall make available for public inspection during the comment period the record supporting the proposed order, which shall include all of the information submitted by the State to EPA under paragraph (b) of this section, all other studies, monitoring data and other information considered by the Agency in developing the proposed order.

(d) Final review order:

(1) Based upon review of all information obtained regarding the proposed review order, including public comments, the Regional Administrator shall issue a final review order within 120 days after issuance of the proposed order which affirms, modifies, or withdraws the proposed order. The Regional Administrator may extend the time period for issuing the final order for good cause. If the final order modifies or withdraws the proposed order, the final order shall explain the reasons supporting the change.

(2) The record of the final order shall consist of the record supporting the

proposed order, all public comments, all other information considered by the Regional Administrator in issuing the final order and a document responding to all significant public comments submitted on the proposed order. If new points are raised or new material supplied during the public comment period, the Regional Administrator may support the responses on those matters by adding new materials to the record. The record shall be complete when the final order is issued.

(3) Notice of the final order shall be provided by mailing the final order to the affected system(s), the State, and all parties who commented on the proposed order.

(4) Upon issuance of the final order, its terms constitute requirements of the national primary drinking water regulation for lead and/or copper until such time as the Regional Administrator issues a new order (which may include recision of the previous order) pursuant to the procedures in this section. Such requirements shall supersede any inconsistent treatment requirements established by the State pursuant to the national primary drinking water regulations for lead and copper.

(5) The Regional Administrator may not issue a final order to impose conditions less stringent than those imposed by the State.

(e) The Regional Administrator may not delegate authority to sign the final order under this section.

(f) Final action of the Regional Administrator under paragraph (d) of this section shall constitute action of the Administrator for purposes of 42 U.S.C. § 300j–7(a)(2).

[56 FR 26563, June 7, 1991]

Subpart C—Review of State-Issued Variances and Exemptions

§ 142.20 State-issued variances and exemptions under Section 1415(a) and Section 1416 of the Act.

(a) States with primary enforcement responsibility may issue variances to public water systems (other than small system variances) from the requirements of primary drinking water regulations under conditions and in a manner which are not less stringent than the requirements under Section 1415(a) of the Act. In States that do not have primary enforcement responsibility, variances may be granted by the Administrator pursuant to Subpart E of this part.

(1) A State must document all findings that are required under Section 1415(a) of the Act.

(2) If a State prescribes a schedule pursuant to section 1415(a) of the Act requiring compliance with a contaminant level for which the variance is granted later than five years from the date of issuance of the variance the State must—

(i) Document its rationale for the extended compliance schedule;

(ii) Discuss the rationale for the extended compliance schedule in the required public notice and opportunity for public hearing; and

(iii) Provide the shortest practicable time schedule feasible under the circumstances.

(b) States with primary enforcement responsibility may issue exemptions from the requirements of primary drinking water regulations under conditions and in a manner which are not less stringent than the requirements under Section 1416 of the Act. In States that do not have primary enforcement responsibility, exemptions may be granted by the Administrator pursuant to Subpart F of this part.

(1) A State must document all findings that are required under Section 1416 of the Act:

(i) Before finding that management and restructuring changes cannot be made, a State must consider the following measures, and the availability of State Revolving Loan Fund assistance, or any other Federal or State program, that is reasonably likely to be available within the period of the exemption to implement these measures:

(A) Consideration of rate increases, accounting changes, the appointment of a State-certified operator under the State's Operator Certification program, contractual agreements for joint operation with one or more public water systems;

(B) Activities consistent with the State's Capacity Development Strategy to help the public water system acquire and maintain technical, financial, and managerial capacity to come into compliance with the Act; and

(C) Ownership changes, physical consolidation with another public water system, or other feasible and appropriate means of consolidation which would result in compliance with the Act;

(ii) The State must consider the availability of an alternative source of water, including the feasibility of partnerships with neighboring public water systems, as identified by the public water system or by the State consistent with the Capacity Development Strategy.

(2) In the case of a public water system serving a population of not more than 3,300 persons and which needs financial assistance for the necessary improvements under the initial compliance schedule, an exemption granted by the State under section 1416(b)(2)(B)(i) or (ii) of the Act may be renewed for one or more additional 2-year periods, but not to exceed a total of 6 additional years, only if the State establishes that the public water system is taking all practicable steps to meet the requirements of Section 1416(b)(2)(B) of the Act and the established compliance schedule to achieve full compliance with the contaminant level or treatment technique for which the exemption was granted. A State must document its findings in granting an extension under this paragraph.

[63 FR 43847, Aug. 14, 1998]

§ 142.21 State consideration of a variance or exemption request.

A State with primary enforcement responsibility shall act on any variance or exemption request submitted to it, within 90 days of receipt of the request.

§ 142.22 Review of State variances, exemptions and schedules.

(a) Not later than 18 months after the effective date of the interim national primary drinking water regulations the Administrator shall complete a comprehensive review of the variances and exemptions granted (and schedules prescribed pursuant thereto) by the States with primary enforcement responsibility during the one-year period beginning on such effective date. The Administrator shall conduct such subsequent reviews of exemptions and schedules as he deems necessary to carry out the purposes of this title, but at least one review shall be completed within each 3–year period following the completion of the first review under this paragraph.

(b) Notice of a proposed review shall be published in the FEDERAL REGISTER. Such notice shall (1) provide information respecting the location of data and other information respecting the variances and exemptions to be reviewed (including data and other information concerning new scientific matters bearing on such variances and exemptions), and (2) advise of the opportunity to submit comments on the variances and exemptions reviewed and on the need for continuing them. Upon completion of any such review, the Administrator shall publish in the FEDERAL REGISTER the results of his review, together with findings responsive to any comments submitted in connection with such review.

§ 142.23 Notice to State.

(a) If the Administrator finds that a State has, in a substantial number of instances, abused its discretion in granting variances or exemptions under section 1415(a) or section 1416(a) of the Act or failed to prescribe schedules in accordance with section 1415(a) or section 1416(b) of the Act, he shall notify the State of his findings. Such notice shall:

(1) Identify each public water system for which the finding was made;

(2) Specify the reasons for the finding; and

(3) As appropriate, propose revocation of specific variances or exemptions, or propose revised schedules for specific public water systems.

(b) The Administrator shall also notify the State of a public hearing to be held on the provisions of the notice required by paragraph (a) of this section. Such notice shall specify the time and

location for the hearing. If, upon notification of a finding by the Administrator, the State takes adequate corrective action, the Administrator shall rescind his notice to the State of a public hearing, provided that the Administrator is notified of the corrective action prior to the hearing.

(c) The Administrator shall publish notice of the public hearing in the FEDERAL REGISTER and in a newspaper or newspapers of general circulation in the involved State including a summary of the findings made pursuant to paragraph (a) of this section, a statement of the time and location for the hearing, and the address and telephone number of an office at which interested persons may obtain further information concerning the hearing.

(d) Hearings convened pursuant to paragraphs (b) and (c) of this section shall be conducted before a hearing officer to be designated by the Administrator. The hearing shall be conducted by the hearing officer in an informal, orderly and expeditious manner. The hearing officer shall have authority to call witnesses, receive oral and written testimony and take such other action as may be necessary to assure the fair and efficient conduct of the hearing. Following the conclusion of the hearing, the hearing officer shall forward the record of the hearing to the Administrator.

(e) Within 180 days after the date notice is given pursuant to paragraph (b) of this section, the Administrator shall:

(1) Rescind the finding for which the notice was given and promptly notify the State of such rescission, or

(2) Promulgate with any modifications as appropriate such revocation and revised schedules proposed in such notice and promptly notify the State of such action.

(f) A revocation or revised schedule shall take effect 90 days after the State is notified under paragraph (e)(2) of this section.

§ 142.24 Administrator's rescission.

If, upon notification of a finding by the Administrator under § 142.23, the State takes adequate corrective action before the effective date of the revocation or revised schedule, the Administrator shall rescind the application of his finding to that variance, exemption or schedule.

Subpart D—Federal Enforcement

§ 142.30 Failure by State to assure enforcement.

(a) The Administrator shall notify a State and the appropriate supplier of water whenever he finds during a period in which the State has primary enforcement responsibility for public water systems that a public water system within such State is not in compliance with any primary drinking water regulation contained in part 141 of this chapter or with any schedule or other requirements imposed pursuant to a variance or exemption granted under section 1415 or 1416 of the Act: *Provided*, That the State will be deemed to have been notified of a violation referred to in a report submitted by the State.

(b) The Administrator shall provide advice and technical assistance to such State and public water system as may be appropriate to bring the system into compliance by the earliest feasible time.

[41 FR 2918, Jan. 20, 1976, as amended at 52 FR 20675, June 2, 1987]

§ 142.31 [Reserved]

§ 142.32 Petition for public hearing.

(a) If the Administrator makes a finding of noncompliance pursuant to § 142.30 with respect to a public water system in a State which has primary enforcement responsibility, the Administrator may, for the purpose of assisting that State in carrying out such responsibility and upon the petition of such State or public water system or persons served by such system, hold, after appropriate notice, public hearings for the purpose of gathering information as described in § 142.33.

(b) A petition for a public hearing pursuant to paragraph (a) of this section shall be filed with the Administrator and shall include the following information:

(1) The name, address and telephone number of the individual or other entity requesting a hearing.

(2) If the petition is filed by a person other than the State or public water

system, a statement that the person is served by the system.

(3) A brief statement of information that the requesting person intends to submit at the requested hearing.

(4) The signature of the individual submitting the petition; or, if the petition is filed on behalf of a State, public water system or other entity, the signature of a responsible official of the State or other entity.

§ 142.33 Public hearing.

(a) If the Administrator grants the petition for public hearing, he shall give appropriate public notice of such hearing. Such notice shall be by publication in the FEDERAL REGISTER and in a newspaper of general circulation or by other appropriate communications media covering the area served by such public water system.

(b) A hearing officer designated by the Administrator shall gather during the public hearing information from technical or other experts, Federal, State, or other public officials, representatives of the public water system, persons served by the system, and other interested persons on:

(1) The ways in which the system can within the earliest feasible time be brought into compliance, and

(2) The means for the maximum feasible protection of the public health during any period in which such system is not in compliance.

(c) On the basis of the hearing and other available information the Administrator shall issue recommendations which shall be sent to the State and public water system and shall be made available to the public and communications media.

§ 142.34 Entry and inspection of public water systems.

(a) Any supplier of water or other person subject to a national primary drinking water regulation shall, at any time, allow the Administrator, or a designated representative of the Administrator, upon presenting appropriate credentials and a written notice of inspection, to enter any establishment, facility or other property of such supplier or other person to determine whether such supplier or other person has acted or is acting in compliance with the requirements of the Act or subchapter D of this chapter. Such inspection may include inspection, at reasonable times, of records, files, papers, processes, controls and facilities, or testing of any feature of a public water system, including its raw water source.

(b) Prior to entry into any establishment, facility or other property within a State which has primary enforcement responsibility, the Administrator shall notify, in writing, the State agency charged with responsibility for safe drinking water of his intention to make such entry and shall include in his notification a statement of reasons for such entry. The Administrator shall, upon a showing by the State agency that such an entry will be detrimental to the administration of the State's program of primary enforcement responsibility, take such showing into consideration in determining whether to make such entry. The Administrator shall in any event offer the State agency the opportunity of having a representative accompany the Administrator or his representative on such entry.

(c) No State agency which receives notice under paragraph (b) of this section may use the information contained in the notice to inform the person whose property is proposed to be entered of the proposed entry; if a State so uses such information, notice to the agency under paragraph (b) of this section is not required for subsequent inspections of public water systems until such time as the Administrator determines that the agency has provided him satisfactory assurances that it will no longer so use information contained in a notice received under paragraph (b) of this section.

Subpart E—Variances Issued by the Administrator Under Section 1415(a) of the Act

§ 142.40 Requirements for a variance.

(a) The Administrator may grant one or more variances to any public water system within a State that does not have primary enforcement responsibility from any requirement respecting a maximum contaminant level of an

applicable national primary drinking water regulation upon a finding that:

(1) Because of characteristics of the raw water sources which are reasonably available to the system, the system cannot meet the requirements respecting the maximum contaminant levels of such drinking water regulations despite application of the best technology, treatment techniques, or other means, which the Administrator finds are generally available (taking costs into consideration); and

(2) The granting of a variance will not result in an unreasonable risk to the health of persons served by the system.

(b) The Administrator may grant one or more variances to any public water system within a State that does not have primary enforcement responsibility from any requirement of a specified treatment technique of an applicable national primary drinking water regulation upon a finding that the public water system applying for the variance has demonstrated that such treatment technique is not necessary to protect the health of persons because of the nature of the raw water source of such system.

§ 142.41 Variance request.

A supplier of water may request the granting of a variance pursuant to this subpart for a public water system within a State that does not have primary enforcement responsibility by submitting a request for a variance in writing to the Administrator. Suppliers of water may submit a joint request for variances when they seek similar variances under similar circumstances. Any written request for a variance or variances shall include the following information:

(a) The nature and duration of variance requested.

(b) Relevant analytical results of water quality sampling of the system, including results of relevant tests conducted pursuant to the requirements of the national primary drinking water regulations.

(c) For any request made under § 142.40(a):

(1) Explanation in full and evidence of the best available treatment technology and techniques.

(2) Economic and legal factors relevant to ability to comply.

(3) Analytical results of raw water quality relevant to the variance request.

(4) A proposed compliance schedule, including the date each step toward compliance will be achieved. Such schedule shall include as a minimum the following dates:

(i) Date by which arrangement for alternative raw water source or improvement of existing raw water source will be completed.

(ii) Date of initiation of the connection of the alternative raw water source or improvement of existing raw water source.

(iii) Date by which final compliance is to be achieved.

(5) A plan for the provision of safe drinking water in the case of an excessive rise in the contaminant level for which the variance is requested.

(6) A plan for additional interim control measures during the effective period of variance.

(d) For any request made under § 142.40(b), a statement that the system will perform monitoring and other reasonable requirements prescribed by the Administrator as a condition to the variance.

(e) Other information, if any, believed to be pertinent by the applicant.

(f) Such other information as the Administrator may require.

[41 FR 2918, Jan. 20, 1976, as amended at 52 FR 20675, June 2, 1987]

§ 142.42 Consideration of a variance request.

(a) The Administrator shall act on any variance request submitted pursuant to § 142.41 within 90 days of receipt of the request.

(b) In his consideration of whether the public water system is unable to comply with a contaminant level required by the national primary drinking water regulations because of the nature of the raw water source, the Administrator shall consider such factors as the following:

(1) The availability and effectiveness of treatment methods for the contaminant for which the variance is requested.

(2) Cost and other economic considerations such as implementing treatment, improving the quality of the source water or using an alternate source.

(c) A variance may be issued to a public water system on the condition that the public water system install the best technology, treatment techniques, or other means, which the Administrator finds are available (taking costs into consideration) and based upon an evaluation satisfactory to the Administrator that indicates that alternative sources of water are not reasonably available to the public water system.

(d) In his consideration of whether a public water system should be granted a variance to a required treatment technique because such treatment is unnecessary to protect the public health, the Administrator shall consider such factors as the following:

(1) Quality of the water source including water quality data and pertinent sources of pollution.

(2) Source protection measures employed by the public water system.

[41 FR 2918, Jan. 20, 1976, as amended at 52 FR 20675, June 2, 1987; 63 FR 43847, Aug. 14, 1998]

§ 142.43 Disposition of a variance request.

(a) If the Administrator decides to deny the application for a variance, he shall notify the applicant of his intention to issue a denial. Such notice shall include a statement of reasons for the proposed denial, and shall offer the applicant an opportunity to present, within 30 days of receipt of the notice, additional information or argument to the Administrator. The Administrator shall make a final determination on the request within 30 days after receiving any such additional information or argument. If no additional information or argument is submitted by the applicant the application shall be denied.

(b) If the Administrator proposes to grant a variance request submitted pursuant to § 142.41, he shall notify the applicant of his decision in writing. Such notice shall identify the variance, the facility covered, and shall specify the period of time for which the variance will be effective.

(1) For the type of variance specified in § 142.40(a) such notice shall provide that the variance will be terminated when the system comes into compliance with the applicable regulation, and may be terminated upon a finding by the Administrator that the system has failed to comply with any requirements of a final schedule issued pursuant to § 142.44.

(2) For the type of variance specified in § 142.40(b) such notice shall provide that the variance may be terminated at any time upon a finding that the nature of the raw water source is such that the specified treatment technique for which the variance was granted is necessary to protect the health of persons or upon a finding that the public water system has failed to comply with monitoring and other requirements prescribed by the Administrator as a condition to the granting of the variance.

(c) For a variance specified in § 142.40(a)(1) the Administrator shall propose a schedule for:

(1) Compliance (including increments of progress) by the public water system with each contaminant level requirement covered by the variance; and,

(2) Implementation by the public water system of such additional control measures as the Administrator may require for each contaminant covered by the variance.

(d) The proposed schedule for compliance shall specify dates by which steps towards compliance are to be taken, including at the minimum, where applicable:

(1) Date by which arrangement for an alternative raw water source or improvement of existing raw water source will be completed.

(2) Date of initiation of the connection for the alternative raw water source or improvement of the existing raw water source.

(3) Date by which final compliance is to be achieved.

(e) The proposed schedule may, if the public water system has no access to an alternative raw water source, and can effect or anticipate no adequate improvement of the existing raw water

source, specify an indefinite time period for compliance until a new and effective treatment technology is developed at which time a new compliance schedule shall be prescribed by the Administrator.

(f) The proposed schedule for implementation of additional interim control measures during the period of variance shall specify interim treatment techniques, methods and equipment, and dates by which steps toward meeting the additional interim control measures are to be met.

(g) The schedule shall be prescribed by the Administrator at the time of granting of the variance, subsequent to provision of opportunity for hearing pursuant to § 142.44.

[41 FR 2918, Jan. 20, 1976, as amended at 52 FR 20675, June 2, 1987]

§ 142.44 Public hearings on variances and schedules.

(a) Before a variance and schedule proposed by the Administrator pursuant to § 142.43 may take effect, the Administrator shall provide notice and opportunity for public hearing on the variance and schedule. A notice given pursuant to the preceding sentence may cover the granting of more than one variance and a hearing held pursuant to such notice shall include each of the variances covered by the notice.

(b) Public notice of an opportunity for hearing on a variance and schedule shall be circulated in a manner designed to inform interested and potentially interested persons of the proposed variance and schedule, and shall include at least the following:

(1) Posting of a notice in the principal post office of each municipality or area served by the public water system, and publishing of a notice in a newspaper or newspapers of general circulation in the area served by the public water system; and

(2) Mailing of a notice to the agency of the State in which the system is located which is responsible for the State's water supply program, and to other appropriate State or local agencies at the Administrator's discretion.

(3) Such notice shall include a summary of the proposed variance and schedule and shall inform interested persons that they may request a public hearing on the proposed variance and schedule.

(c) Requests for hearing may be submitted by any interested person other than a Federal agency. Frivolous or insubstantial requests for hearing may be denied by the Administrator. Requests must be submitted to the Administrator within 30 days after issuance of the public notices provided for in paragraph (b) of this section. Such requests shall include the following information:

(1) The name, address and telephone number of the individual, organization or other entity requesting a hearing;

(2) A brief statement of the interest of the person making the request in the proposed variance and schedule, and of information that the requester intends to submit at such hearing;

(3) The signature of the individual making the request, or, if the request is made on behalf of an organization or other entity, the signature of a responsible official of the organization or other entity.

(d) The Administrator shall give notice in the manner set forth in paragraph (b) of this section of any hearing to be held pursuant to a request submitted by an interested person or on his own motion. Notice of the hearing shall also be sent to the persons requesting the hearing, if any. Notice of the hearing shall include a statement of the purpose of the hearing, information regarding the time and location for the hearing, and the address and telephone number of an office at which interested persons may obtain further information concerning the hearing. At least one hearing location specified in the public notice shall be within the involved State. Notice of hearing shall be given not less than 15 days prior to the time scheduled for the hearing.

(e) A hearing convened pursuant to paragraph (d) of this section shall be conducted before a hearing officer to be designated by the Administrator. The hearing shall be conducted by the hearing officer in an informal, orderly and expeditious manner. The hearing officer shall have authority to call witnesses, receive oral and written testimony and take such other action as may be necessary to assure the fair and

efficient conduct of the hearing. Following the conclusion of the hearing, the hearing officer shall forward the record of the hearing to the Administrator.

(f) The variance and schedule shall become effective 30 days after notice of opportunity for hearing is given pursuant to paragraph (b) of this section if no timely request for hearing is submitted and the Administrator does not determine to hold a public hearing on his own motion.

[41 FR 2918, Jan. 20, 1976, as amended at 52 FR 20675, June 2, 1987]

§ 142.45 Action after hearing.

Within 30 days after the termination of the public hearing held pursuant to § 142.44, the Administrator shall, taking into consideration information obtained during such hearing and relevant information, confirm, revise or rescind the proposed variance and schedule.

[52 FR 20675, June 2, 1987]

§ 142.46 Alternative treatment techniques.

The Administrator may grant a variance from any treatment technique requirement of a national primary drinking water regulation to a supplier of water, whether or not the public water system for which the variance is requested is located in a State which has primary enforcement responsibility, upon a showing from any person that an alternative treatment technique not included in such requirement is at least as efficient in lowering the level of the contaminant with respect to which such requirements was prescribed. A variance under this paragraph shall be conditioned on the use of the alternative treatment technique which is the basis of the variance.

Subpart F—Exemptions Issued by the Administrator

§ 142.50 Requirements for an exemption.

(a) The Administrator may exempt any public water system within a State that does not have primary enforcement responsibility from any requirement regarding a maximum contaminant level or any treatment technique requirement, or from both, of an applicable national primary drinking water regulation upon a finding that—

(1) Due to compelling factors (which may include economic factors, including qualification of the public water system as a system serving a disadvantaged community pursuant to section 1452(d) of the Act), the public water system is unable to comply with such contaminant level or treatment technique requirement or to implement measures to develop an alternative source of water supply;

(2) The public water system was in operation on the effective date of such contaminant level or treatment technique requirement, or for a public water system that was not in operation by that date, no reasonable alternative source of drinking water is available to such new public water system;

(3) The granting of the exemption will not result in an unreasonable risk to health; and

(4) Management or restructuring changes (or both), as provided in § 142.20(b)(1)(i), cannot reasonably be made that will result in compliance with the applicable national primary drinking water regulation or, if compliance cannot be achieved, improve the quality of the drinking water.

(b) No exemption shall be granted unless the public water system establishes that the public water system is taking all practicable steps to meet the standard; and

(1) The public water system cannot meet the standard without capital improvements which cannot be completed prior to the date established pursuant to Section 1412(b)(10) of the Act;

(2) In the case of a public water system which needs financial assistance for the necessary improvements, the public water system has entered into an agreement to obtain such financial assistance or assistance pursuant to Section 1452 of the Act, or any other Federal or State program that is reasonably likely to be available within the period of the exemption; or

(3) The public water system has entered into an enforceable agreement to become a part of a regional public water system.

(c) A public water system may not receive an exemption under this subpart if the public water system was granted a variance under Section 1415(e) of the Act.

[63 FR 43847, Aug. 14, 1998]

§ 142.51 Exemption request.

A supplier of water may request the granting of an exemption pursuant to this subpart for a public water system within a State that does not have primary enforcement responsibility by submitting a request for exemption in writing to the Administrator. Suppliers of water may submit a joint request for exemptions when they seek similar exemptions under similar circumstances. Any written request for an exemption or exemptions shall include the following information:

(a) The nature and duration of exemption requested.

(b) Relevant analytical results of water quality sampling of the system, including results of relevant tests conducted pursuant to the requirements of the national primary drinking water regulations.

(c) Explanation of the compelling factors such as time or economic factors which prevent such system from achieving compliance.

(d) Other information, if any, believed by the applicant to be pertinent to the application.

(e) A proposed compliance schedule, including the date when each step toward compliance will be achieved.

(f) Such other information as the Administrator may require.

§ 142.52 Consideration of an exemption request.

(a) The Administrator shall act on any exemption request submitted pursuant to § 142.51 within 90 days of receipt of the request.

(b) In his consideration of whether the public water system is unable to comply due to compelling factors, the Administrator shall consider such factors as the following:

(1) Construction, installation, or modification of the treatment equipment or systems.

(2) The time needed to put into operation a new treatment facility to replace an existing system which is not in compliance.

(3) Economic feasibility of compliance.

§ 142.53 Disposition of an exemption request.

(a) If the Administrator decides to deny the application for an exemption, he shall notify the applicant of his intention to issue a denial. Such notice shall include a statement of reasons for the proposed denial, and shall offer the applicant an opportunity to present, within 30 days of receipt of the notice, additional information or argument to the Administrator. The Administrator shall make a final determination on the request within 30 days after receiving any such additional information or argument. If no additional information or argument is submitted by the applicant, the application shall be denied.

(b) If the Administrator grants an exemption request submitted pursuant to § 142.51, he shall notify the applicant of his decision in writing. Such notice shall identify the facility covered, and shall specify the termination date of the exemption. Such notice shall provide that the exemption will be terminated when the system comes into compliance with the applicable regulation, and may be terminated upon a finding by the Administrator that the system has failed to comply with any requirements of a final schedule issued pursuant to § 142.55.

(c) The Administrator shall propose a schedule for:

(1) Compliance (including increments of progress or measures to develop an alternative source of water supply) by the public water system with each contaminant level requirement or treatment technique requirement with respect to which the exemption was granted; and

(2) Implementation by the public water system of such control measures as the Administrator may require for each contaminant covered by the exemption.

(d) The schedule shall be prescribed by the Administrator at the time the exemption is granted, subsequent to

provision of opportunity for hearing pursuant to § 142.54.

[41 FR 2918, Jan. 20, 1976, as amended at 52 FR 20675, June 2, 1987; 63 FR 43848, Aug. 14, 1998]

§ 142.54 Public hearings on exemption schedules.

(a) Before a schedule proposed by the Administrator pursuant to § 142.53 may take effect, the Administrator shall provide notice and opportunity for public hearing on the schedule. A notice given pursuant to the preceding sentence may cover the proposal of more than one such schedule and a hearing held pursuant to such notice shall include each of the schedules covered by the notice.

(b) Public notice of an opportunity for hearing on an exemption schedule shall be circulated in a manner designed to inform interested and potentially interested persons of the proposed schedule, and shall include at least the following:

(1) Posting of a notice in the principal post office of each municipality or area served by the public water system, and publishing of a notice in a newspaper or newspapers of general circulation in the area served by the public water system.

(2) Mailing of a notice to the agency of the State in which the system is located which is responsible for the State's water supply program and to other appropriate State or local agencies at the Administrator's discretion.

(3) Such notices shall include a summary of the proposed schedule and shall inform interested persons that they may request a public hearing on the proposed schedule.

(c) Requests for hearing may be submitted by any interested person other than a Federal agency. Frivolous or insubstantial requests for hearing may be denied by the Administrator. Requests must be submitted to the Administrator within 30 days after issuance of the public notices provided for in paragraph (b) of this section. Such requests shall include the following information:

(1) The name, address and telephone number of the individual, organization or other entity requesting a hearing;

(2) A brief statement of the interest of the person making the request in the proposed schedule and of information that the requesting person intends to submit at such hearing; and

(3) The signature of the individual making the request, or, if the request is made on behalf of an organization or other entity, the signature of a responsible official of the organization or other entity.

(d) The Administrator shall give notice in the manner set forth in paragraph (b) of this section of any hearing to be held pursuant to a request submitted by an interested person or on his own motion. Notice of the hearing shall also be sent to the person requesting the hearing, if any. Notice of the hearing shall include a statement of the purpose of the hearing, information regarding the time and location of the hearing, and the address and telephone number of an office at which interested persons may obtain further information concerning the hearing. At least one hearing location specified in the public notice shall be within the involved State. Notice of the hearing shall be given not less than 15 days prior to the time scheduled for the hearing.

(e) A hearing convened pursuant to paragraph (d) of this section shall be conducted before a hearing officer to be designated by the Administrator. The hearing shall be conducted by the hearing officer in an informal, orderly and expeditious manner. The hearing officer shall have authority to call witnesses, receive oral and written testimony and take such action as may be necessary to assure the fair and efficient conduct of the hearing. Following the conclusion of the hearing, the hearing officer shall forward the record of the hearing to the Administrator.

[41 FR 2918, Jan. 20, 1976, as amended at 52 FR 20675, June 2, 1987]

§ 142.55 Final schedule.

(a) Within 30 days after the termination of the public hearing pursuant to § 142.54, the Administrator shall, taking into consideration information obtained during such hearing, revise the proposed schedule as necessary and

prescribe the final schedule for compliance and interim measures for the public water system granted an exemption under § 142.52.

(b) Such schedule must require compliance with each contaminant level and treatment technique requirement with respect to which the exemption was granted as expeditiously as practicable but not later than 3 years after the otherwise applicable compliance date established in section 1412(b)(10) of the Act.

(c) [Reserved]

[41 FR 2918, Jan. 20, 1976, as amended at 52 FR 20675, June 2, 1987; 63 FR 43848, Aug. 14, 1998]

§ 142.56 Extension of date for compliance.

In the case of a public water system which serves a population of not more than 3,300 persons and which needs financial assistance for the necessary improvements, an exemption granted under § 142.50(b) (1) or (2) may be renewed for one or more additional 2-year periods, but not to exceed a total of 6 additional years, if the public water system establishes that the public water system is taking all practicable steps to meet the requirements of section 1416(b)(2)(B) of the Act and the established compliance schedule.

[63 FR 43848, Aug. 14, 1998]

§ 142.57 Bottled water, point-of-use, and point-of-entry devices.

(a) A State may require a public water system to use bottled water, point-of-use devices, or point-of-entry devices as a condition of granting an exemption from the requirements of §§ 141.61 (a) and (c), and 141.62 of this chapter.

(b) Public water systems using bottled water as a condition of obtaining an exemption from the requirements of §§ 141.61 (a) and (c) and 141.62(b) must meet the requirements in § 142.62(g).

(c) Public water systems that use point-of-use or point-of-entry devices as a condition for receiving an exemption must meet the requirements in § 141.62(h).

[56 FR 3596, Jan. 30, 1991, as amended at 56 FR 30280, July 1, 1991]

Subpart G—Identification of Best Technology, Treatment Techniques or Other Means Generally Available

§ 142.60 Variances from the maximum contaminant level for total trihalomethanes.

(a) The Administrator, pursuant to section 1415(a)(1)(A) of the Act, hereby identifies the following as the best technology, treatment techiques or other means generally available for achieving compliance with the maximum contaminant level for total trihalomethanes (§ 141.12(c)):

(1) Use of chloramines as an alternate or supplemental disinfectant or oxidant.

(2) Use of chlorine dioxide as an alternate or supplemental disinfectant or oxidant.

(3) Improved existing clarification for THM precursor reduction.

(4) Moving the point of chlorination to reduce TTHM formation and, where necessary, substituting for the use of chlorine as a pre-oxidant chloramines, chlorine dioxide or potassium permanganate.

(5) Use of powdered activated carbon for THM precursor or TTHM reduction seasonally or intermittently at dosages not to exceed 10 mg/L on an annual average basis.

(b) The Administrator in a state that does not have primary enforcement responsibility or a state with primary enforcement responsibility (primacy state) that issues variances shall require a community water system to install and/or use any treatment method identified in § 142.60(a) as a condition for granting a variance unless the Administrator or primacy state determines that such treatment method identified in § 142.60(a) is not available and effective for TTHM control for the system. A treatment method shall not be considered to be ''available and effective'' for an individual system if the treatment method would not be technically appropriate and technically feasible for that system or would only result in a marginal reduction in TTHM for the system. If, upon application by a system for a variance, the Administrator or primacy state that issues variances determines that none

of the treatment methods identified in §142.60(a) is available and effective for the system, that system shall be entitled to a variance under the provisions of section 1415(a)(1)(A) of the Act. The Administrator's or primacy state's determination as to the availability and effectiveness of such treatment methods shall be based upon studies by the system and other relevant information. If a system submits information intending to demonstrate that a treatment method is not available and effective for TTHM control for that system, the Administrator or primacy state shall make a finding whether this information supports a decision that such treatment method is not available and effective for that system before requiring installation and/or use of such treatment method.

(c) Pursuant to §142.43 (c) through (g) or corresponding state regulations, the Administrator or primacy state that issues variances shall issue a schedule of compliance that may require the system being granted the variance to examine the following treatment methods (1) to determine the probability that any of these methods will significantly reduce the level of TTHM for that system, and (2) if such probability exists, to determine whether any of these methods are technically feasible and economically reasonable, and that the TTHM reductions obtained will be commensurate with the costs incurred with the installation and use of such treatment methods for that system:

Introduction of off-line water storage for THM precursor reduction.

Aeration for TTHM reduction, where geographically and environmentally appropriate.

Introduction of clarification where not currently practiced.

Consideration of alternative sources of raw water.

Use of ozone as an alternate or supplemental disinfectant or oxidant.

(d) If the Administrator or primacy state that issues variances determines that a treatment method identified in §142.60(c) is technically feasible, economically reasonable and will achieve TTHM reductions commensurate with the costs incurred with the installation and/or use of such treatment method for the system, the Administrator or primacy state shall require the system to install and/or use that treatment method in connection with a compliance schedule issued under the provisions of section 1415(a)(1)(A) of the Act. The Administrator's or primacy state's determination shall be based upon studies by the system and other relevant information. In no event shall the Administrator require a system to install and/or use a treatment method not described in §142.60 (a) or (c) to obtain or maintain a variance from the TTHM Rule or in connection with any variance compliance schedule.

[48 FR 8414, Feb. 28, 1983]

§142.61 Variances from the maximum contaminant level for fluoride.

(a) The Administrator, pursuant to section 1415(a)(1)(A) of the Act, hereby identifies the following as the best technology, treatment techniques or other means generally available for achieving compliance with the Maximum Contaminant Level for fluoride.

(1) Activated alumina absorption, centrally applied

(2) Reverse osmosis, centrally applied

(b) The Administrator in a state that does not have primary enforcement responsibility or a state with primary enforcement responsibility (primacy state) that issues variances shall require a community water system to install and/or use any treatment method identified in §142.61(a) as a condition for granting a variance unless the Administrator or the primacy state determines that such treatment method identified in §142.61(a) as a condition for granting a variance is not available and effective for fluoride control for the system. A treatment method shall not be considered to be ''available and effective'' for an individual system if the treatment method would not be technically appropriate and technically feasible for that system. If, upon application by a system for a variance, the Administrator or primacy state that issues variances determines that none of the treatment methods identified in §142.61(a) are available and effective for the system, that system shall be entitled to a variance under the provisions of section

1415(a)(1)(A) of the Act. The Administrator's or primacy state's determination as to the availability and effectiveness of such treatment methods shall be based upon studies by the system and other relevant information. If a system submits information to demonstrate that a treatment method is not available and effective for fluoride control for that system, the Administrator or primacy state shall make a finding whether this information supports a decision that such treatment method is not available and effective for that system before requiring installation and/or use of such treatment method.

(c) Pursuant to § 142.43 (c)–(g) or corresponding state regulations, the Administrator or primacy state that issues variances shall issue a schedule of compliance that may require the system being granted the variance to examine the following treatment methods (1) to determine the probability that any of these methods will significantly reduce the level of fluoride for that system, and (2) if such probability exists, to determine whether any of these methods are technically feasible and economically reasonable, and that the fluoride reductions obtained will be commensurate with the costs incurred with the installation and use of such treatment methods for that system:

(1) Modification of lime softening;
(2) Alum coagulation;
(3) Electrodialysis;
(4) Anion exchange resins;
(5) Well field management;
(6) Alternate source;
(7) Regionalization.

(d) If the Administrator or primary state that issues variances determines that a treatment method identified in § 142.61(c) or other treatment method is technically feasible, economically reasonable, and will achieve fluoride reductions commensurate with the costs incurred with the installation and/or use of such treatment method for the system, the Administrator or primacy state shall require the system to install and/or use that treatment method in connection with a compliance schedule issued under the provisions of section 1415(a)(1)(A) of the Act. The Administrator's or primacy state's determination shall be based upon studies by the system and other relevant information.

[51 FR 11411, Apr. 2, 1986]

§ 142.62 Variances and exemptions from the maximum contaminant levels for organic and inorganic chemicals.

(a) The Administrator, pursuant to section 1415(a)(1)(A) of the Act hereby identifies the technologies listed in paragraphs (a)(1) through (a)(54) of this section as the best technology, treatment techniques, or other means available for achieving compliance with the maximum contaminant levels for organic chemicals listed in § 141.61 (a) and (c):

Contaminant	Best available technologies		
	PTA [1]	GAC [2]	OX [3]
(1) Benzene	X	X	
(2) Carbon tetrachloride	X	X	
(3) 1,2-Dichloroethane	X	X	
(4) Trichloroethylene	X	X	
(5) para-Dichlorobenzene	X	X	
(6) 1,1-Dichloroethylene	X	X	
(7) 1,1,1-Trichloroethane	X	X	
(8) Vinyl chloride	X		
(9) cis-1,2-Dichloroethylene	X	X	
(10) 1,2-Dichloropropane	X	X	
(11) Ethylbenzene	X	X	
(12) Monochlorobenzene	X	X	
(13) o-Dichlorobenzene	X	X	
(14) Styrene	X	X	
(15) Tetrachloroethylene	X	X	
(16) Toluene	X	X	
(17) trans-1,2-Dichloroethylene	X	X	
(18) Xylense (total)	X	X	
(19) Alachlor		X	
(20) Aldicarb		X	
(21) Aldicarb sulfoxide		X	
(22) Aldicarb sulfone		X	

Contaminant	Best available technologies		
	PTA [1]	GAC [2]	OX [3]
(23) Atrazine		X	
(24) Carbofuran		X	
(25) Chlordane		X	
(26) Dibromochloropropane	X	X	
(27) 2,4-D		X	
(28) Ethylene dibromide	X	X	
(29) Heptachlor		X	
(30) Heptachlor epoxide		X	
(31) Lindane		X	
(32) Methoxychlor		X	
(33) PCBs		X	
(34) Pentachlorophenol		X	
(35) Toxaphene		X	
(36) 2,4,5-TP		X	
(37) Benzo[a]pyrene		X	
(38) Dalapon		X	
(39) Dichloromethane	X		
(40) Di(2-ethylhexyl)adipate	X	X	
(41) Di(2-ethylhexyl)phthalate		X	
(42) Dinoseb		X	
(43) Diquat		X	
(44) Endothall		X	
(45) Endrin		X	
(46) Glyphosate			X
(47) Hexachlorobenzene		X	
(48) Hexachlorocyclopentadiene	X	X	
(49) Oxamyl (Vydate)		X	
(50) Picloram		X	
(51) Simazine		X	
(52) 1,2,4-Trichlorobenzene	X	X	
(53) 1,1,2-Trichloroethane	X	X	
(54) 2,3,7,8-TCDD (Dioxin)		X	

[1] Packed Tower Aeration
[2] Granular Activated Carbon
[3] Oxidation (Chlorination or Ozonation)

(b) The Administrator, pursuant to section 1415(a)(1)(A) of the Act, hereby identifies the following as the best technology, treatment techniques, or other means available for achieving compliance with the maximum contaminant levels for the inorganic chemicals listed in § 141.62:

BAT FOR INORGANIC COMPOUNDS LISTED IN § 141.62(b)

Chemical name	BAT(s)
Antimony	2,7
Arsenic [4]	[5] 1, 2, 5, 6, 7, 9, 12
Asbestos	2,3,8
Barium	5,6,7,9
Beryllium	1,2,5,6,7
Cadmium	2,5,6,7
Chromium	2,5,6 [2],7
Cyanide	5,7,10
Mercury	2 [1],4,6 [1],7 [1]
Nickel	5,6,7
Nitrite	5,7,9
Nitrate	5,7
Selenium	1,2 [3],6,7,9
Thallium	1,5

[1] BAT only if influent Hg concentrations ≤10μg/1.
[2] BAT for Chromium III only.
[3] BAT for Selenium IV only.
[4] BATs for Arsenic V. Pre-oxidation may be required to convert Arsenic III to Arsenic V.
[5] To obtain high removals, iron to arsenic ratio must be at least 20:1.

Key to BATS in Table

1 = Activated Alumina
2 = Coagulation/Filtration (not BAT for systems <500 service connections)
3 = Direct and Diatomite Filtration
4 = Granular Activated Carbon
5 = Ion Exchange
6 = Lime Softening (not BAT for systems <500 service connections)
7 = Reverse Osmosis
8 = Corrosion Control
9 = Electrodialysis
10 = Chlorine
11 = Ultraviolet
12 = Oxidation/Filtration

(c) A State shall require community water systems and non-transient, non-community water systems to install and/or use any treatment method identified in § 142.62 (a) and (b) as a condition for granting a variance except as provided in paragraph (d) of this section. If, after the system's installation

of the treatment method, the system cannot meet the MCL, that system shall be eligible for a variance under the provisions of section 1415(a)(1)(A) of the Act.

(d) If a system can demonstrate through comprehensive engineering assessments, which may include pilot plant studies, that the treament methods identified in § 142.62 (a) and (b) would only achieve a *de minimis* reduction in contaminants, the State may issue a schedule of compliance that requires the system being granted the variance to examine other treatment methods as a condition of obtaining the variance.

(e) If the State determines that a treatment method identified in paragraph (d) of this section is technically feasible, the Administrator or primacy State may require the system to install and/or use that treatment method in connection with a compliance schedule issued under the provisions of section 1415(a)(1)(A) of the Act. The State's determination shall be based upon studies by the system and other relevant information.

(f) The State may require a public water system to use bottled water, point-of-use devices, point-of-entry devices or other means as a condition of granting a variance or an exemption from the requirements of §§ 141.61 (a) and (c) and 141.62, to avoid an unreasonable risk to health. The State may require a public water system to use bottled water and point-of-use devices or other means, *but not point-of-entry devices*, as a condition for granting an exemption from corrosion control treatment requirements for lead and copper in §§ 141.81 and 141.82 to avoid an unreasonable risk to health. The State may require a public water system to use point-of-entry devices as a condition for granting an exemption from the source water and lead service line replacement requirements for lead and copper under §§ 141.83 or 141.84 to avoid an unreasonable risk to health.

(g) Public water systems that use bottled water as a condition for receiving a variance or an exemption from the requirements of §§ 141.61 (a) and (c) and 141.62, or an exemption from the requirements of §§ 141.81–141.84 must meet the requirements specified in either paragraph (g)(1) or (g)(2) and paragraph (g)(3) of this section:

(1) The Administrator or primacy State must require and approve a monitoring program for bottled water. The public water system must develop and put in place a monitoring program that provides reasonable assurances that the bottled water meets all MCLs. The public water system must monitor a representative sample of the bottled water for all contaminants regulated under §§ 141.61 (a) and (c) and 141.62 during the first three-month period that it supplies the bottled water to the public, and annually thereafter. Results of the monitoring program shall be provided to the State annually.

(2) The public water system must receive a certification from the bottled water company that the bottled water supplied has been taken from an ''approved source'' as defined in 21 CFR 129.3(a); the bottled water company has conducted monitoring in accordance with 21 CFR 129.80(g) (1) through (3); and the bottled water does not exceed any MCLs or quality limits as set out in 21 CFR 165.110, part 110, and part 129. The public water system shall provide the certification to the State the first quarter after it supplies bottled water and annually thereafter. At the State's option a public water system may satisfy the requirements of this subsection if an approved monitoring program is already in place in another State.

(3) The public water system is fully responsible for the provision of sufficient quantities of bottled water to every person supplied by the public water system via door-to-door bottled water delivery.

(h) Public water systems that use point-of-use or point-of-entry devices as a condition for obtaining a variance or an exemption from NPDWRs must meet the following requirements:

(1) It is the responsibility of the public water system to operate and maintain the point-of-use and/or point-of-entry treatment system.

(2) Before point-of-use or point-of-entry devices are installed, the public water system must obtain the approval of a monitoring plan which ensures

that the devices provide health protection equivalent to that provided by central water treatment.

(3) The public water system must apply effective technology under a State-approved plan. The microbiological safety of the water must be maintained at all times.

(4) The State must require adequate certification of performance, field testing, and, if not included in the certification process, a rigorous engineering design review of the point-of-use and/or point-of-entry devices.

(5) The design and application of the point-of-use and/or point-of-entry devices must consider the potential for increasing concentrations of heterotrophic bacteria in water treated with activated carbon. It may be necessary to use frequent backwashing, post-contactor disinfection, and Heterotrophic Plate Count monitoring to ensure that the microbiological safety of the water is not compromised.

(6) The State must be assured that buildings connected to the system have sufficient point-of-use or point-of-entry devices that are properly installed, maintained, and monitored such that all consumers will be protected.

(7) In requiring the use of a point-of-entry device as a condition for granting an exemption from the treatment requirements for lead and copper under §§141.83 or 141.84, the State must be assured that use of the device will not cause increased corrosion of lead and copper bearing materials located between the device and the tap that could increase contaminant levels at the tap.

[56 FR 3596, Jan. 30, 1991, as amended at 56 FR 26563, June 7, 1991; 57 FR 31848, July 17, 1992; 59 FR 33864, June 30, 1994; 59 FR 34325, July 1, 1994; 66FR 7066, Jan. 22, 2001; 69 FR 38857, June 29, 2004]

§ 142.63 Variances and exemptions from the maximum contaminant level for total coliforms.

(a) No variances or exemptions from the maximum contaminant level in §141.63 of this chapter are permitted.

(b) EPA has stayed this section as it relates to the total coliform MCL of §141.63(a) of this chapter for systems that demonstrate to the State that the violation of the total coliform MCL is due to a persistent growth of total coliforms in the distribution system rather than fecal or pathogenic contamination, a treatment lapse or deficiency, or a problem in the operation or maintenance of the distribution system. This stay is applicable until March 31, 2016, at which time the total coliform MCL is no longer applicable.

[54 FR 27568, June 29, 1989, as amended at 56 FR 1557, Jan. 15, 1991; 78 FR 10365, Feb. 13, 2013]

§ 142.64 Variances and exemptions from the requirements of part 141, subpart H—Filtration and Disinfection.

(a) No variances from the requirements in part 141, subpart H are permitted.

(b) No exemptions from the requirements in §141.72 (a)(3) and (b)(2) to provide disinfection are permitted.

[54 FR 27540, June 29, 1989]

§ 142.65 Variances and exemptions from the maximum contaminant levels for radionuclides.

(a)(1) Variances and exemptions from the maximum contaminant levels for combined radium-226 and radium-228, uranium, gross alpha particle activity (excluding Radon and Uranium), and beta particle and photon radioactivity.

(i) The Administrator, pursuant to section 1415(a)(1)(A) of the Act, hereby identifies the following as the best available technology, treatment techniques, or other means available for achieving compliance with the maximum contaminant levels for the radionuclides listed in §141.66(b), (c), (d), and (e) of this chapter, for the purposes of issuing variances and exemptions, as shown in Table A to this paragraph.

TABLE A—BAT FOR RADIONUCLIDES LISTED IN § 141.66

Contaminant	BAT
Combined radium-226 and radium-228.	Ion exchange, reverse osmosis, lime softening.
Uranium	Ion exchange, reverse osmosis, lime softening, coagulation/filtration.
Gross alpha particle activity (excluding radon and uranium).	Reverse osmosis.
Beta particle and photon radioactivity.	Ion exchange, reverse osmosis.

(ii) In addition, the Administrator hereby identifies the following as the best available technology, treatment techniques, or other means available for achieving compliance with the maximum contaminant levels for the radionuclides listed in §141.66(b), (c), (d), and (e) of this chapter, for the purposes of issuing variances and exemptions to small drinking water systems, defined here as those serving 10,000 persons or fewer, as shown in Table C to this paragraph.

TABLE B—LIST OF SMALL SYSTEMS COMPLIANCE TECHNOLOGIES FOR RADIONUCLIDES AND LIMITATIONS TO USE

Unit technologies	Limitations (see footnotes)	Operator skill level required [1]	Raw water quality range & considerations [1]
1. Ion exchange (IE)	([a])	Intermediate	All ground waters.
2. Point of use (POU [2]) IE	([b])	Basic	All ground waters.
3. Reverse osmosis (RO)	([c])	Advanced	Surface waters usually require pre-filtration.
4. POU [2] RO	([b])	Basic	Surface waters usually require pre-filtration.
5. Lime softening	([d])	Advanced	All waters.
6. Green sand filtration	([e])	Basic.	
7. Co-precipitation with barium sulfate	([f])	Intermediate to Advanced	Ground waters with suitable water quality.
8. Electrodialysis/electrodialysis reversal		Basic to Intermediate	All ground waters.
9. Pre-formed hydrous manganese oxide filtration.	([g])	Intermediate	All ground waters.
10. Activated alumina	([a]), ([h])	Advanced	All ground waters; competing anion concentrations may affect regeneration frequency.
11. Enhanced coagulation/filtration	([i])	Advanced	Can treat a wide range of water qualities.

[1] National Research Council (NRC). Safe Water from Every Tap: Improving Water Service to Small Communities. National Academy Press. Washington, D.C. 1997.

[2] A POU, or ''point-of-use'' technology is a treatment device installed at a single tap used for the purpose of reducing contaminants in drinking water at that one tap. POU devices are typically installed at the kitchen tap. See the April 21, 2000 NODA for more details.

Limitations Footnotes: Technologies for Radionuclides:

[a] The regeneration solution contains high concentrations of the contaminant ions. Disposal options should be carefully considered before choosing this technology.

[b] When POU devices are used for compliance, programs for long-term operation, maintenance, and monitoring must be provided by water utility to ensure proper performance.

[c] Reject water disposal options should be carefully considered before choosing this technology. See other RO limitations described in the SWTR compliance technologies table.

[d] The combination of variable source water quality and the complexity of the water chemistry involved may make this technology too complex for small surface water systems.

[e] Removal efficiencies can vary depending on water quality.

[f] This technology may be very limited in application to small systems. Since the process requires static mixing, detention basins, and filtration, it is most applicable to systems with sufficiently high sulfate levels that already have a suitable filtration treatment train in place.

[g] This technology is most applicable to small systems that already have filtration in place.

[h] Handling of chemicals required during regeneration and pH adjustment may be too difficult for small systems without an adequately trained operator.

[i] Assumes modification to a coagulation/filtration process already in place.

TABLE C—BAT FOR SMALL COMMUNITY WATER SYSTEMS FOR THE RADIONUCLIDES LISTED IN §141.66

Contaminant	Compliance technologies [1] for system size categories (population served)		
	25–500	501–3,300	3,300–10,000
Combined radium-226 and radium-228	1, 2, 3, 4, 5, 6, 7, 8, 9	1, 2, 3, 4, 5, 6, 7, 8, 9	1, 2, 3, 4, 5, 6, 7, 8, 9.
Gross alpha particle activity	3, 4	3, 4	3, 4.
Beta particle activity and photon activity	1, 2, 3, 4	1, 2, 3, 4	1, 2, 3, 4.
Uranium	1, 2, 4, 10, 11	1, 2, 3, 4, 5, 10, 11	1, 2, 3, 4, 5, 10, 11.

[1] NOTE: Numbers correspond to those technologies found listed in the table B to this paragraph.

(2) A State shall require community water systems to install and/or use any treatment technology identified in Table A to this section, or in the case of small water systems (those serving 10,000 persons or fewer), Table B and

Table C of this section, as a condition for granting a variance except as provided in paragraph (a)(3) of this section. If, after the system's installation of the treatment technology, the system cannot meet the MCL, that system shall be eligible for a variance under the provisions of section 1415(a)(1)(A) of the Act.

(3) If a community water system can demonstrate through comprehensive engineering assessments, which may include pilot plant studies, that the treatment technologies identified in this section would only achieve a *de minimus* reduction in the contaminant level, the State may issue a schedule of compliance that requires the system being granted the variance to examine other treatment technologies as a condition of obtaining the variance.

(4) If the State determines that a treatment technology identified under paragraph (a)(3) of this section is technically feasible, the Administrator or primacy State may require the system to install and/or use that treatment technology in connection with a compliance schedule issued under the provisions of section 1415(a)(1)(A) of the Act. The State's determination shall be based upon studies by the system and other relevant information.

(5) The State may require a community water system to use bottled water, point-of-use devices, point-of-entry devices or other means as a condition of granting a variance or an exemption from the requirements of § 141.66 of this chapter, to avoid an unreasonable risk to health.

(6) Community water systems that use bottled water as a condition for receiving a variance or an exemption from the requirements of § 141.66 of this chapter must meet the requirements specified in either § 142.62(g)(1) or § 142.62(g)(2) and (g)(3).

(7) Community water systems that use point-of-use or point-of-entry devices as a condition for obtaining a variance or an exemption from the radionuclides NPDWRs must meet the conditions in § 142.62(h)(1) through (h)(6).

(b) [Reserved]

[65 FR 76751, Dec. 7, 2000]

Subpart H—Indian Tribes

SOURCE: 53 FR 37411, Sept. 26, 1988, unless otherwise noted.

§ 142.72 Requirements for Tribal eligibility.

The Administrator is authorized to treat an Indian tribe as eligible to apply for primary enforcement for the Public Water System Program and the authority to waive the mailing requirements of § 141.155(a) if it meets the following criteria:

(a) The Indian Tribe is recognized by the Secretary of the Interior.

(b) The Indian Tribe has a tribal governing body which is currently ''carrying out substantial governmental duties and powers'' over a defined area, (*i.e.*, is currently performing governmental functions to promote the health, safety, and welfare of the affected population within a defined geographic area).

(c) The Indian Tribe demonstrates that the functions to be performed in regulating the public water systems that the applicant intends to regulate are within the area of the Indian Tribal government's jurisdiction.

(d) The Indian Tribe is reasonably expected to be capable, in the Administrator's judgment, of administering (in a manner consistent with the terms and purposes of the Act and all applicable regulations) an effective Public Water System program.

[53 FR 37411, Sept. 26, 1988, as amended at 59 FR 64344, Dec. 14, 1994; 63 FR 44535, Aug. 19, 1998]

§ 142.76 Request by an Indian Tribe for a determination of eligibility.

An Indian Tribe may apply to the Administrator for a determination that it meets the criteria of section 1451 of the Act. The application shall be concise and describe how the Indian Tribe will meet each of the requirements of § 142.72. The application shall consist of the following information:

(a) A statement that the Tribe is recognized by the Secretary of the Interior.

(b) A descriptive statement demonstrating that the Tribal governing body is currently carrying out substantial governmental duties and powers

over a defined area. The statement should:

(1) Describe the form of the Tribal government;

(2) Describe the types of governmental functions currently performed by the Tribal governing body such as, but not limited to, the exercise of police powers affecting (or relating to) the health, safety, and welfare of the affected population; taxation; and the exercise of the power of eminent domain; and

(3) Identify the sources of the Tribal government's authority to carry out the governmental functions currently being performed.

(c) A map or legal description of the area over which the Indian Tribe asserts jurisdiction; a statement by the Tribal Attorney General (or equivalent official) which describes the basis for the Tribe's jurisdictional assertion (including the nature or subject matter of the asserted jurisdiction); a copy of those documents such as Tribal constitutions, by-laws, charters, executive orders, codes, ordinances, and/or resolutions which the Tribe believes are relevant to its assertions regarding jurisdiction; and a description of the locations of the public water systems the Tribe proposes to regulate.

(d) A narrative statement describing the capability of the Indian Tribe to administer an effective Public Water System program. The narrative statement should include:

(1) A description of the Indian Tribe's previous management experience which may include, the administration of programs and services authorized by the Indian Self-Determination and Education Assistance Act (25 U.S.C. 450 *et seq.*), the Indian Mineral Development Act (25 U.S.C. 2101 *et seq.*), or the Indian Sanitation Facilities Construction Activity Act (42 U.S.C. 2004a).

(2) A list of existing environmental or public health programs administered by the Tribal governing body and a copy of related Tribal laws, regulations and policies.

(3) A description of the Indian Tribe's accounting and procurement systems.

(4) A description of the entity (or entities) which exercise the executive, legislative, and judicial functions of the Tribal government.

(5) A description of the existing, or proposed, agency of the Indian Tribe which will assume primary enforcement responsibility, including a description of the relationship between owners/operators of the public water systems and the agency.

(6) A description of the technical and administrative capabilities of the staff to administer and manage an effective Public Water System Program or a plan which proposes how the Tribe will acquire additional administrative and/or technical expertise. The plan must address how the Tribe will obtain the funds to acquire the additional administrative and technical expertise.

(e) The Administrator may, in his discretion, request further documentation necessary to support a Tribe's eligibility.

(f) If the Administrator has previously determined that a Tribe has met the prerequisites that make it eligible to assume a role similar to that of a state as provided by statute under the Safe Drinking Water Act, the Clean Water Act, or the Clean Air Act, then that Tribe need provide only that information unique to the Public Water System program (paragraphs (c), (d)(5) and (6) of this section).

[53 FR 37411, Sept. 26, 1988, as amended at 59 FR 64344, Dec. 14, 1994]

§ 142.78 Procedure for processing an Indian Tribe's application.

(a) The Administrator shall process a completed application of an Indian Tribe in a timely manner. He shall promptly notify the Indian Tribe of receipt of the application.

(b) A tribe that meets the requirements of § 141.72 of this chapter is eligible to apply for development grants and primacy enforcement responsibility for a Public Water System Program and associated funding under section 1443(a) of the Act and for primary enforcement responsibility for public water systems under section 1413 of the Act and for the authority to waive the mailing requirement of § 141.155(a) of this chapter.

[53 FR 37411 Sept. 26, 1988, as amended at 59 FR 64345, Dec. 14, 1994; 63 FR 71376, Dec. 28, 1998]

Subpart I—Administrator's Review of State Decisions that Implement Criteria Under Which Filtration Is Required

SOURCE: 54 FR 27540, June 29, 1989, unless otherwise noted.

§ 142.80 Review procedures.

(a) The Administrator may initiate a comprehensive review of the decisions made by States with primary enforcement responsibility to determine, in accordance with § 141.71 of this chapter, if public water systems using surface water sources must provide filtration treatment. The Administrator shall complete this review within one year of its initiation and shall schedule subsequent reviews as (s)he deems necessary.

(b) EPA shall publish notice of a proposed review in the FEDERAL REGISTER. Such notice must:

(1) Provide information regarding the location of data and other information pertaining to the review to be conducted and other information including new scientific matter bearing on the application of the criteria for avoiding filtration; and

(2) Advise the public of the opportunity to submit comments.

(c) Upon completion of any such review, the Administrator shall notify each State affected by the results of the review and shall make the results available to the public.

§ 142.81 Notice to the State.

(a) If the Administrator finds through periodic review or other available information that a State (1) has abused its discretion in applying the criteria for avoiding filtration under § 141.71 of this chapter in determining that a system does not have to provide filtration treatment, or (2) has failed to prescribe compliance schedules for those systems which must provide filtration in accordance with section 1412(b)(7)(C)(ii) of the Act, (s)he shall notify the State of these findings. Such notice shall:

(1) Identify each public water system for which the Administrator finds the State has abused its discretion;

(2) Specify the reasons for the finding;

(3) As appropriate, propose that the criteria of § 141.71 of this chapter be applied properly to determine the need for a public water system to provide filtration treatment or propose a revised schedule for compliance by the public water system with the filtration treatment requirements;

(b) The Administrator shall also notify the State that a public hearing is to be held on the provisions of the notice required by paragraph (a) of this section. Such notice shall specify the time and location of the hearing. If, upon notification of a finding by the Administrator that the State has abused its discretion under § 141.71 of this chapter, the State takes corrective action satisfactory to the Administrator, the Administrator may rescind the notice to the State of a public hearing.

(c) The Administrator shall publish notice of the public hearing in the FEDERAL REGISTER and in a newspaper of general circulation in the involved State, including a summary of the findings made pursuant to paragraph (a) of this section, a statement of the time and location for the hearing, and the address and telephone number of an office at which interested persons may obtain further information concerning the hearing.

(d) Hearings convened pursuant to paragraphs (b) and (c) of this section shall be conducted before a hearing officer to be designated by the Administrator. The hearing shall be conducted by the hearing officer in an informal, orderly, and expeditious manner. The hearing officer shall have the authority to call witnesses, receive oral and written testimony, and take such other action as may be necessary to ensure the fair and efficient conduct of the hearing. Following the conclusion of the hearing, the hearing officer may make a recommendation to the Administrator based on the testimony presented at the hearing and shall forward any such recommendation and the record of the hearing to the Administrator.

(e) Within 180 days after the date notice is given pursuant to paragraph (b) of this section, the Administrator shall:

(1) Rescind the notice to the State of a public hearing if the State takes corrective action satisfactory to the Administrator; or

(2) Rescind the finding for which the notice was given and promptly notify the State of such rescission; or

(3) Uphold the finding for which the notice was given. In this event, the Administrator shall revoke the State's decision that filtration was not required or revoke the compliance schedule approved by the State, and promulgate, as appropriate, with any appropriate modifications, a revised filtration decision or compliance schedule and promptly notify the State of such action.

(f) Revocation of a State's filtration decision or compliance schedule and/or promulgation of a revised filtration decision or compliance schedule shall take effect 90 days after the State is notified under paragraph (e)(3) of this section.

Subpart J [Reserved]

Subpart K—Variances for Small System

SOURCE: 63 FR 43848, Aug. 14, 1998, unless otherwise noted.

GENERAL PROVISIONS

§ 142.301 What is a small system variance?

Section 1415(e) of the Act authorizes the issuance of variances from the requirement to comply with a maximum contaminant level or treatment technique to systems serving fewer than 10,000 persons. The purpose of this subpart is to provide the procedures and criteria for obtaining these variances. The regulations in this subpart shall take effect on September 14, 1998.

§ 142.302 Who can issue a small system variance?

A small system variance under this subpart may only be issued by either:

(a) A State that is exercising primary enforcement responsibility under Subpart B for public water systems under the State's jurisdiction; or

(b) The Administrator, for a public water system in a State which does not have primary enforcement responsibility.

§ 142.303 Which size public water systems can receive a small system variance?

(a) A State exercising primary enforcement responsibility for public water systems (or the Administrator for other systems) may grant a small system variance to public water systems serving 3,300 or fewer persons.

(b) With the approval of the Administrator pursuant to § 142.312, a State exercising primary enforcement responsibility for public water systems may grant a small system variance to public water systems serving more than 3,300 persons but fewer than 10,000 persons.

(c) In determining the number of persons served by the public water system, the State or Administrator must include persons served by consecutive systems. A small system variance granted to a public water system would also apply to any consecutive system served by it.

§ 142.304 For which of the regulatory requirements is a small system variance available?

(a) A small system variance is not available under this subpart for a national primary drinking water regulation for a microbial contaminant (including a bacterium, virus, or other organism) or an indicator or treatment technique for a microbial contaminant.

(b) A small system variance under this subpart is otherwise only available for compliance with a requirement specifying a maximum contaminant level or treatment technique for a contaminant with respect to which;

(1) a national primary drinking water regulation was promulgated on or after January 1, 1986; and

(2) the Administrator has published a small system variance technology pursuant to Section 1412(b)(15) of the Act.

NOTE TO PARAGRAPH (b)(1): Small system variances are not available for public water systems above the pre-1986 maximum contaminant level even if subsequently revised. If the Agency revises a pre-1986 maximum contaminant level and makes it more stringent, then a variance would be available for that contaminant, but only up to the pre-1986 maximum contaminant level.

§ 142.305 When can a small system variance be granted by a State?

No small system variance can be granted by a State until the later of the following:

(a) 90 days after the State proposes to grant the small system variance;

(b) If a State is proposing to grant a small system variance to a public water system serving 3,300 or fewer persons and the Administrator objects to the small system variance, the date on which the State makes the recommended modifications or responds in writing to each objection; or

(c) If a State is proposing to grant a small system variance to a public water system serving a population more than 3,300 and fewer than 10,000 persons, the date the Administrator approves the small system variance. The Administrator must approve or disapprove the variance within 90 days after it is submitted to the Administrator for review.

REVIEW OF SMALL SYSTEM VARIANCE APPLICATION

§ 142.306 What are the responsibilities of the public water system, State and the Administrator in ensuring that sufficient information is available and for evaluation of a small system variance application?

(a) A public water system requesting a small system variance must provide accurate and correct information to the State or the Administrator to issue a small system variance in accordance with this subpart. A State may assist a public water system in compiling information required for the State or the Administrator to issue a small system variance in accordance with this subpart.

(b) Based upon an application for a small system variance and other information, and before a small system variance may be proposed under this subpart, the State or the Administrator must find and document the following:

(1) The public water system is eligible for a small system variance pursuant to §§142.303 (*i.e.*, the system serves a population of fewer than 10,000 persons) and 142.304 (*i.e.*, the contaminant for which the small system variance is sought is not excluded from variance eligibility);

(2) The public water system cannot afford to comply, in accordance with the affordability criteria established by the State (or by the Administrator in States which do not have primary enforcement responsibility), with the national primary drinking water regulation for which a small system variance is sought, including by:

(i) Treatment;

(ii) Alternative sources of water supply;

(iii) Restructuring or consolidation changes, including ownership change and/or physical consolidation with another public water system; or

(iv) Obtaining financial assistance pursuant to Section 1452 of the Act or any other Federal or State program;

(3) The public water system meets the source water quality requirements for installing the small system variance technology developed pursuant to guidance published under section 1412(b)(15) of the Act;

(4) The public water system is financially and technically capable of installing, operating and maintaining the applicable small system variance technology; and

(5) The terms and conditions of the small system variance, as developed through compliance with §142.307, ensure adequate protection of human health, considering the following:

(i) The quality of the source water for the public water system; and

(ii) Removal efficiencies and expected useful life of the small system variance technology.

§ 142.307 What terms and conditions must be included in a small system variance?

(a) A State or the Administrator must clearly specify enforceable terms and conditions of a small system variance.

(b) The terms and conditions of a small system variance issued under this subpart must include, at a minimum, the following requirements:

(1) Proper and effective installation, operation and maintenance of the applicable small system variance technology in accordance with guidance

published by the Administrator pursuant to section 1412(b)(15) of the Act, taking into consideration any relevant source water characteristics and any other site-specific conditions that may affect proper and effective operation and maintenance of the technology;

(2) Monitoring requirements, for the contaminant for which a small system variance is sought, as specified in 40 CFR part 141; and

(3) Any other terms or conditions that are necessary to ensure adequate protection of public health, which may include:

(i) Public education requirements; and

(ii) Source water protection requirements.

(c) The State or the Administrator must establish a schedule for the public water system to comply with the terms and conditions of the small system variance which must include, at a minimum, the following requirements:

(1) Increments of progress, such as milestone dates for the public water system to apply for financial assistance and begin capital improvements;

(2) Quarterly reporting to the State or Administrator of the public water system's compliance with the terms and conditions of the small system variance;

(3) Schedule for the State or the Administrator to review the small system variance under paragraph (d) of this section; and

(4) Compliance with the terms and conditions of the small system variance as soon as practicable but not later than 3 years after the date on which the small system variance is granted. The Administrator or State may allow up to 2 additional years if the Administrator or State determines that additional time is necessary for the public water system to:

(i) Complete necessary capital improvements to comply with the small system variance technology, secure an alternative source of water, or restructure or consolidate; or

(ii) Obtain financial assistance provided pursuant to section 1452 of the Act or any other Federal or State program.

(d) The State or the Administrator must review each small system variance granted not less often than every 5 years after the compliance date established in the small system variance to determine whether the public water system continues to meet the eligibility criteria and remains eligible for the small system variance and is complying with the terms and conditions of the small system variance. If the public water system would no longer be eligible for a small system variance, the State or the Administrator must determine whether continuing the variance is in the public interest. If the State or the Administrator finds that continuing the variance is not in the public interest, the variance must be withdrawn.

PUBLIC PARTICIPATION

§ 142.308 What public notice is required before a State or the Administrator proposes to issue a small system variance?

(a) At least fifteen (15) days before the date of proposal, and at least thirty (30) days prior to a public meeting to discuss the proposed small system variance, the State, Administrator, or public water system as directed by the State or Administrator, must provide notice to all persons served by the public water system. For billed customers, identified in paragraph (a)(1) of this section, this notice must include the information listed in paragraph (c) of this section. For other persons regularly served by the system, identified in paragraph (a)(2) of this section, the notice shall include the information identified in paragraph (d) of this section. Notice must be provided to all persons served by:

(1) Direct mail or other home delivery to billed customers or other service connections, and

(2) Any other method reasonably calculated to notify, in a brief and concise manner, other persons regularly served by the system. Such methods may include publication in a local newspaper, posting in public places or delivery to community organizations.

(b) At the time of proposal, the State must publish a notice in the State equivalent to the FEDERAL REGISTER or a newspaper or newspapers of wide circulation in the State, or, in the case of the Administrator, in the FEDERAL

REGISTER. This notice shall include the information listed in paragraph (c) of this section.

(c) The notice in paragraphs (a)(1) and (b) of this section must include, at a minimum, the following:

(1) Identification of the contaminant[s] for which a small system variance is sought;

(2) A brief statement of the health effects associated with the contaminant[s] for which a small system variance is sought using language in appendix C of part 141 subpart O of this chapter;

(3) The address and telephone number at which interested persons may obtain further information concerning the contaminant and the small system variance;

(4) A brief summary, in easily understandable terms, of the terms and conditions of the small system variance;

(5) A description of the consumer petition process under § 142.310 and information on contacting the EPA Regional Office;

(6) a brief statement announcing the public meeting required under § 142.309(a), including a statement of the purpose of the meeting, information regarding the time and location for the meeting, and the address and telephone number at which interested persons may obtain further information concerning the meeting; and

(7) In communities with a large proportion of non-English-speaking residents, as determined by the primacy agency, information in the appropriate language regarding the content and importance of the notice.

(d) The notice in paragraph (a)(2) of this section must provide sufficient information to alert readers to the proposed variance and direct them where to receive additional information.

(e) At its option, the State or the Administrator may choose to issue separate notices or additional notices related to the proposed small system variance, provided that the requirements in paragraphs (a) through (d) of this section are satisfied.

(f) Prior to promulgating the final variance, the State or the Administrator must respond in writing to all significant public comments received relating to the small system variance. Response to public comment and any other documentation supporting the issuance of a variance must be made available to the public after final promulgation.

§ 142.309 What are the public meeting requirements associated with the proposal of a small system variance?

(a) A State or the Administrator must provide for at least one (1) public meeting on the small system variance no later than 15 days after the small system variance is proposed.

(b) At the time of the public meeting, the State or Administrator must prepare and make publicly available, in addition to the information listed in § 142.308(c), either:

(1) The proposed small system variance, if the public meeting occurs after proposal of the small system variance; or

(2) A draft of the proposed small system variance, if the public meeting occurs prior to proposal of the proposed small system variance.

(c) Notice of the public meeting must be provided in the manner required under § 142.308 at least 30 days in advance of the public meeting. This notice must be provided by the State, the Administrator, or the public water system as directed by the State or Administrator.

§ 142.310 How can a person served by the public water system obtain EPA review of a State proposed small system variance?

(a) Any person served by the public water system may petition the Administrator to object to the granting of a small system variance within 30 days after a State proposes to grant a small system variance for a public water system.

(b) The Administrator must respond to a petition filed by any person served by the public water system and determine whether to object to the small system variance under § 142.311, no later than 60 days after the receipt of the petition.

EPA REVIEW AND APPROVAL OF SMALL SYSTEM VARIANCES

§ 142.311 What procedures allow the Administrator to object to a proposed small system variance or overturn a granted small system variance for a public water system serving 3,300 or fewer persons?

(a) At the time a State proposes to grant a small system variance under this subpart, the State must submit to the Administrator the proposed small system variance and all supporting information, including any written public comments received prior to proposal.

(b) The Administrator may review and object to any proposed small system variance within 90 days of receipt of the proposed small system variance. The Administrator must notify the State in writing of each basis for the objection and propose a modification to the small system variance to resolve the concerns of the Administrator. The State must make the recommended modification, respond in writing to each objection, or withdraw the proposal to grant the small system variance.

(c) If the State issues the small system variance without resolving the concerns of the Administrator, the Administrator may overturn the State decision to grant the variance if the Administrator determines that the State decision does not comply with the Act or this rule.

§ 142.312 What EPA action is necessary when a State proposes to grant a small system variance to a public water system serving a population of more than 3,300 and fewer than 10,000 persons?

(a) At the time a State proposes to grant a small system variance to a public water system serving a population of more than 3,300 and fewer than 10,000 persons, the State must submit the proposed small system variance and all supporting information, including public comments received prior to proposal, to the Administrator.

(b) The Administrator must approve or disapprove the small system variance within 90 days of receipt of the proposed small system variance and supporting information. The Administrator must approve the small system variance if it meets each requirement within the Act and this rule.

(c) If the Administrator disapproves the small system variance, the Administrator must notify the State in writing of the reasons for disapproval and the small system variance does not become effective. The State may resubmit the small system variance for review and approval with modifications to address the objections stated by the Administrator.

§ 142.313 How will the Administrator review a State's program under this subpart?

(a) The Administrator must periodically review each State program under this subpart to determine whether small system variances granted by the State comply with the requirements of the Act, this rule and the affordability criteria developed by the State.

(b) If the Administrator determines that small system variances granted by a State are not in compliance with the requirements of the Act, this rule or the affordability criteria developed by the State, the Administrator shall notify the State in writing of the deficiencies and make public the determinations.

(c) The Administrator's review will be based in part on quarterly reports prepared by the States pursuant to § 142.15(a)(1) relating to violations of increments of progress or other violated terms or conditions of small system variances.

PART 143—NATIONAL SECONDARY DRINKING WATER REGULATIONS

Sec.
143.1 Purpose.
143.2 Definitions.
143.3 Secondary maximum contaminant levels.
143.4 Monitoring.

AUTHORITY: 42 U.S.C. 300f *et seq.*

SOURCE: 44 FR 42198, July 19, 1979, unless otherwise noted.

§ 143.1 Purpose.

This part establishes National Secondary Drinking Water Regulations pursuant to section 1412 of the Safe

Drinking Water Act, as amended (42 U.S.C. 300g–1). These regulations control contaminants in drinking water that primarily affect the aesthetic qualities relating to the public acceptance of drinking water. At considerably higher concentrations of these contaminants, health implications may also exist as well as aesthetic degradation. The regulations are not Federally enforceable but are intended as guidelines for the States.

§ 143.2 Definitions.

(a) *Act* means the Safe Drinking Water Act as amended (42 U.S.C. 300f *et seq.)*.

(b) *Contaminant* means any physical, chemical, biological, or radiological substance or matter in water.

(c) *Public water system* means a system for the provision to the public of piped water for human consumption, if such a system has at least fifteen service connections or regularly serves an average of at least twenty-five individuals daily at least 60 days out of the year. Such term includes (1) any collection, treatment, storage, and distribution facilities under control of the operator of such system and used primarily in connection with such system, and (2) any collection or pretreatment storage facilities not under such control which are used primarily in connection with such system. A public water system is either a ''community water system'' or a ''non-community water system.''

(d) *State* means the agency of the State or Tribal government which has jurisdiction over public water systems. During any period when a State does not have responsibility pursuant to section 1443 of the Act, the term ''State'' means the Regional Administrator, U.S. Environmental Protection Agency.

(e) *Supplier of water* means any person who owns or operates a public water system.

(f) *Secondary maximum contaminant levels* means SMCLs which apply to public water systems and which, in the judgement of the Administrator, are requisite to protect the public welfare. The SMCL means the maximum permissible level of a contaminant in water which is delivered to the free flowing outlet of the ultimate user of public water system. Contamimants added to the water under circumstances controlled by the user, except those resulting from corrosion of piping and plumbing caused by water quality, are excluded from this definition.

[44 FR 42198, July 19, 1979, as amended at 53 FR 37412, Sept. 26, 1988]

§ 143.3 Secondary maximum contaminant levels.

The secondary maximum contaminant levels for public water systems are as follows:

Contaminant	Level
Aluminum	0.05 to 0.2 mg/l.
Chloride	250 mg/l.
Color	15 color units.
Copper	1.0 mg/l.
Corrosivity	Non-corrosive.
Fluoride	2.0 mg/l.
Foaming agents	0.5 mg/l.
Iron	0.3 mg/l.
Manganese	0.05 mg/l.
Odor	3 threshold odor number.
pH	6.5–8.5.
Silver	0.1 mg/l.
Sulfate	250 mg/l.
Total dissolved solids (TDS)	500 mg/l.
Zinc	5 mg/l.

These levels represent reasonable goals for drinking water quality. The States may establish higher or lower levels which may be appropriate dependent upon local conditions such as unavailability of alternate source waters or other compelling factors, provided that public health and welfare are not adversely affected.

[44 FR 42198, July 19, 1979, as amended at 51 FR 11412, Apr. 2, 1986; 56 FR 3597, Jan. 30, 1991]

§ 143.4 Monitoring.

(a) It is recommended that the parameters in these regulations should be monitored at intervals no less frequent than the monitoring performed for inorganic chemical contaminants listed in the National Interim Primary Drinking Water Regulations as applicable to community water systems. More frequent monitoring would be appropriate for specific parameters such as pH, color, odor or others under certain circumstances as directed by the State.

(b) Measurement of pH, copper and fluoride to determine compliance under

§ 143.3 may be conducted with one of the methods in § 141.23(k)(1). Analyses of aluminum, chloride, foaming agents, iron, manganese, odor, silver, sulfate, total dissolved solids (TDS) and zinc to determine compliance under § 143.3 may be conducted with the methods in the following table or alternative methods listed in appendix A to subpart C of part 141. Criteria for analyzing aluminum, copper, iron, manganese, silver and zinc samples with digestion or directly without digestion, and other analytical test procedures are contained in *Technical Notes on Drinking Water Methods*, EPA–600/R–94–173, October 1994. This document is available from the National Service Center for Environmental Publications (NSCEP), P.O. Box 42419, Cincinnati, OH 45242–0419 or *http://www.epa.gov/nscep/*.

Contaminant	EPA	ASTM [3]	SM [4] 18th and 19th ed.	SM [4] 20th ed.	SM [7] Online	Other
1. Aluminum	200.7 [2]		3120 B	3120 B	3120 B–99.	
	200.8 [2]		3113 B		3113 B–99.	
	200.9 [2]		3111 D		3111 D–99.	
2. Chloride	300.0 [1], 300.1 [6]	D4327–97, 03	4110 B	4110 B	4110 B–00.	
			4500–Cl^- D	4500–Cl^- D	4500–Cl^- D–97.	
		D512–89 (Re-approved 1999) B.	4500–Cl^- B	4500–Cl^- B	4500–Cl^- B–97.	
						D6508, Rev. 2 [8]
3. Color			2120 B	2120 B	2120 B–01.	
4. Foaming Agents			5540 C	5540 C	5540 C–00.	
5. Iron	200.7 [2]		3120 B	3120 B	3120 B–99.	
	200.9 [2]		3111 B		3111 B–99.	
			3113 B		3113 B–99.	
6. Manganese	200.7 [2]		3120 B	3120 B	3120 B–99.	
	200.8 [2]		3111 B		3111 B–99.	
	200.9 [2]		3113 B		3113 B–99.	
7. Odor			2150 B	2150 B	2150 B–97.	
8. Silver	200.7 [2]		3120 B	3120 B	3120 B–99.	I–3720–85 [5]
	200.8 [2]		3111 B		3111 B–99.	
	200.9 [2]		3113 B		3113 B–99.	
9. Sulfate	300.0 [1], 300.1 [6]	D4327–97, 03	4110 B	4110 B	4110 B–00.	
	375.2 [1]		4500–SO_4^{2-} F	4500–SO_4^{2-} F.		
			4500–SO_4^{2-} C, D	4500–SO_4^{2-} C, D.		
		D516–90, 02	4500–SO_4^{2-} E	4500–SO_4^{2-} E.		
						D6508, Rev. 2 [8]
10. Total Dissolved Solids			2540 C	2540 C	2540 C–97.	
11. Zinc	200.7 [2]		3120 B	3120 B	3120 B–99.	
	200.8 [2]		3111 B		3111 B–99.	

The procedures shall be done in accordance with the documents listed below. The incorporation by reference of the following documents was approved by the Director of the Federal Register in accordance with 5 U.S.C. 552(a) and 1 CFR part 51. Copies of the documents may be obtained from the sources listed below. Information regarding obtaining these documents can be obtained from the Safe Drinking Water Hotline at 800–426–4791. Documents may be inspected at EPA's Drinking Water Docket, EPA West, 1301 Constitution Avenue, NW., Room 3334, Washington, DC (Telephone: 202–566–2426); or at the National Archives and Records Administration (NARA). For information on the availability of this material at NARA, call 202–741–6030, or go to: *http://www.archives.gov/federal_register/code_of_federal_regulations/ibr_locations.html.*

[1] "Methods for the Determination of Inorganic Substances in Environmental Samples," EPA/600/R–93–100, August 1993. Available at NTIS, PB94–120821.

[2] "Methods for the Determination of Metals in Environmental Samples—Supplement I," EPA/600/R–94–111, May 1994. Available at NTIS, PB 95–125472.

[3] *Annual Book of ASTM Standards,* 1994, 1996, 1999, or 2004, Vols. 11.01 and 11.02, ASTM International; any year containing the cited version of the method may be used. Copies may be obtained from the ASTM International, 100 Barr Harbor Drive, West Conshohocken, PA 19428.

[4] *Standard Methods for the Examination of Water and Wastewater,* 18th edition (1992), 19th edition (1995), or 20th edition (1998). American Public Health Association, 1015 Fifteenth Street, NW., Washington, DC 20005. The cited methods published in any of these three editions may be used, except that the versions of 3111 B, 3111 D, and 3113 B in the 20th edition may not be used.

[5] Method I–3720–85, *Techniques of Water Resources Investigation of the U.S. Geological Survey,* Book 5, Chapter A–1, 3rd ed., 1989. Available from Information Services, U.S. Geological Survey, Federal Center, Box 25286, Denver, CO 80225–0425.

[6] "Methods for the Determination of Organic and Inorganic Compounds in Drinking Water," Vol. 1, EPA 815R–00–014, August 2000. Available at NTIS, PB2000–106981.
[7] Standard Methods Online are available at *http://www.standardmethods.org.* The year in which each method was approved by the Standard Methods Committee is designated by the last two digits in the method number. The methods listed are the only online versions that may be used.
[8] Method D6508, Rev. 2, "Test Method for Determination of Dissolved Inorganic Anions in Aqueous Matrices Using Capillary Ion Electrophoresis and Chromate Electrolyte," available from Waters Corp, 34 Maple St., Milford, MA, 01757, Telephone: 508/482–2131, Fax: 508/482–3625.

[44 FR 42198, July 19, 1979, as amended at 53 FR 5147, Feb. 19, 1988; 56 FR 30281, July 1, 1991; 59 FR 62470, Dec. 5, 1994; 64 FR 67466, Dec. 1, 1999; 67 FR 65252, Oct. 23, 2002; 69 FR 18803, Apr. 9, 2004; 72 FR 11248, Mar. 12, 2007; 74 FR 30959, June 29, 2009]

PART 144—UNDERGROUND INJECTION CONTROL PROGRAM

Subpart A—General Provisions

Sec.
144.1 Purpose and scope of part 144.
144.2 Promulgation of Class II programs for Indian lands.
144.3 Definitions.
144.4 Considerations under Federal law.
144.5 Confidentiality of information.
144.6 Classification of wells.
144.7 Identification of underground sources of drinking water and exempted aquifers.
144.8 Noncompliance and program reporting by the Director.

Subpart B—General Program Requirements

144.11 Prohibition of unauthorized injection.
144.12 Prohibition of movement of fluid into underground sources of drinking water.
144.13 Prohibition of Class IV wells.
144.14 Requirements for wells injecting hazardous waste.
144.15 Prohibition of non-experimental Class V wells for geologic sequestration.
144.16 Waiver of requirement by Director.
144.17 Records.
144.18 Requirements for Class VI wells.
144.19 Transitioning from Class II to Class VI.

Subpart C—Authorization of Underground Injection by Rule

144.21 Existing Class I, II (except enhanced recovery and hydrocarbon storage) and III wells.
144.22 Existing Class II enhanced recovery and hydrocarbon storage wells.
144.23 Class IV wells.
144.24 Class V wells.
144.25 Requiring a permit.
144.26 Inventory requirements.
144.27 Requiring other information.
144.28 Requirements for Class I, II, and III wells authorized by rule.

Subpart D—Authorization by Permit

144.31 Application for a permit; authorization by permit.
144.32 Signatories to permit applications and reports.
144.33 Area permits.
144.34 Emergency permits.
144.35 Effect of a permit.
144.36 Duration of permits.
144.37 Continuation of expiring permits.
144.38 Transfer of permits.
144.39 Modification or revocation and reissuance of permits.
144.40 Termination of permits.
144.41 Minor modifications of permits.

Subpart E—Permit Conditions

144.51 Conditions applicable to all permits.
144.52 Establishing permit conditions.
144.53 Schedule of compliance.
144.54 Requirements for recording and reporting of monitoring results.
144.55 Corrective action.

Subpart F—Financial Responsibility: Class I Hazardous Waste Injection Wells

144.60 Applicability.
144.61 Definitions of terms as used in this subpart.
144.62 Cost estimate for plugging and abandonment.
144.63 Financial assurance for plugging and abandonment.
144.64 Incapacity of owners or operators, guarantors, or financial institutions.
144.65 Use of State-required mechanisms.
144.66 State assumption of responsibility.
144.70 Wording of the instruments.

Subpart G—Requirements for Owners and Operators of Class V Injection Wells

144.79 General.

DEFINITION OF CLASS V INJECTION WELLS

144.80 What is a Class V injection well?
144.81 Does this subpart apply to me?

REQUIREMENTS FOR ALL CLASS V INJECTION WELLS

144.82 What must I do to protect underground sources of drinking water?
144.83 Do I need to notify anyone about my Class V injection well?
144.84 Do I need to get a permit?

ADDITIONAL REQUIREMENTS FOR CLASS V LARGE-CAPACITY CESSPOOLS AND MOTOR VEHICLE WASTE DISPOSAL WELLS

144.85 Do these additional requirements apply to me?
144.86 What are the definitions I need to know?
144.87 How does the identification of ground water protection areas and other sensitive areas affect me?
144.88 What are the additional requirements?
144.89 How do I close my Class V injection well?

AUTHORITY: Safe Drinking Water Act, 42 U.S.C. 300f *et seq.;* Resource Conservation and Recovery Act, 42 U.S.C. 6901 *et seq.*

SOURCE: 48 FR 14189, Apr. 1, 1983, unless otherwise noted.

Subpart A—General Provisions

§ 144.1 Purpose and scope of part 144.

(a) *Contents of part 144.* The regulations in this part set forth requirements for the Underground Injection Control (UIC) program promulgated under Part C of the Safe Drinking Water Act (SDWA) (Pub. L. 93–523, as amended; 42 U.S.C. 300f *et seq.*) and, to the extent that they deal with hazardous waste, the Resource Conservation and Recovery Act (RCRA) (Pub. L. 94–580 as amended; 42 U.S.C. 6901 *et seq.*).

(b) *Applicability.* (1) The regulations in this part establish minimum requirements for UIC programs. To the extent set forth in part 145, each State must meet these requirements in order to obtain primary enforcement authority for the UIC program in that State.

(2) In addition to serving as minimum requirements for UIC programs, the regulations in this part constitute a part of the UIC program for States listed in part 147 to be administered directly by EPA.

(c) The information requirements located in the following sections have been cleared by the Office of Management and Budget: Sections 144.11, 144.28(c)(d)(i), 144.31, 14.33, 144.51(j)(m)(n), 144.52(a), 144.54, 144.55, 144.15, 144.23, 144.26, 144.27, 144.28(i)(k), 144.51(o), 146.52. The OMB clearance number is 2040–0042.

(d) *Authority.* (1) Section 1421 of SDWA requires the Administrator to promulgate regulations establishing minimum requirements for effective UIC programs.

(2) Section 1422 of SDWA requires the Administrator to list in the FEDERAL REGISTER ''each State for which in his judgment a State underground injection control program may be necessary to assure that underground injection will not endanger drinking water sources'' and to establish by regulation a program for EPA administration of UIC programs in the absence of an approved State program in a listed State.

(3) Section 1423 of SDWA provides procedures for EPA enforcement of UIC requirements.

(4) Section 1431 authorizes the Administrator to take action to protect the health of persons when a contaminant which is present in or may enter a public water system or underground source of drinking water may present an imminent and substantial endangerment to the health of persons.

(5) Section 1445 of SDWA authorizes the promulgation of regulations for such recordkeeping, reporting, and monitoring requirements ''as the Administrator may reasonably require * * * to assist him in establishing regulations under this title,'' and a ''right of entry and inspection to determine compliance with this title, including for this purpose, inspection, at reasonable time, or records, files, papers, processes, controls, and facilities * * *.''

(6) Section 1450 of SDWA authorizes the Administrator ''to prescribe such regulations as are necessary or appropriate to carry out his functions'' under SDWA.

(e) *Overview of the UIC program.* An UIC program is necessary in any State listed by EPA under section 1422 of the SDWA. Because all States have been listed, the SDWA requires all States to submit an UIC program within 270 days after July 24, 1980, the effective date of 40 CFR part 146, which was the final element of the UIC minimum requirements to be originally promulgated, unless the Administrator grants an extension, which can be for a period not to exceed an additional 270 days. If a State fails to submit an approvable program, EPA will establish a program for that State. Once a program is established, SDWA provides that all underground injections in listed States are unlawful and subject to penalties unless authorized by a permit or a rule. This part sets forth the requirements governing all UIC programs, authorizations by permit or rule and prohibits certain types of injection. The technical regulations governing these authorizations appear in 40 CFR part 146.

(f) *Structure of the UIC program*—(1) *Part 144.* This part sets forth the permitting and other program requirements that must be met by UIC Programs, whether run by a State or by EPA. It is divided into the following subparts:

(i) Subpart A describes general elements of the program, including definitions and classifications.

(ii) Subpart B sets forth the general program requirements, including the performance standards applicable to all injection activities, basic elements that all UIC programs must contain, and provisions for waiving permit of rule requirements under certain circumstances.

(iii) Subpart C sets forth requirements for wells authorized by rule.

(iv) Subpart D sets forth permitting procedures.

(v) Subpart E sets forth specific conditions, or types of conditions, that must at a minimum be included in all permits.

(vi) Subpart F sets forth the financial responsibility requirements for owners and operators of all existing and new Class I hazardous waste injection wells.

(vii) Subpart G of this part sets forth requirements for owners and operators of Class V injection wells.

(viii) Subpart H of part 146 sets forth requirements for owners or operators of Class VI injection wells.

(2) *Part 145*. While part 144 sets forth minimum requirements for all UIC Programs, these requirements are specifically identified as elements of a State application for primacy to administer an UIC Program in part 145. Part 145 also sets forth the necessary elements of a State submission and the procedural requirements for approval of State programs.

(3) *Part 124*. The public participation requirements that must be met by UIC Programs, whether administered by the State or by EPA, are set forth in part 124. EPA must comply with all part 124 requirements; State administered programs must comply with part 124 as required by part 145. These requirements carry out the purposes of the public participation requirement of 40 CFR part 25 (Public Participation), and supersede the requirements of that part as they apply to the UIC Program.

(4) *Part 146*. This part sets forth the technical criteria and standards that must be met in permits and authorizations by rule as required by part 144.

(g) *Scope of the permit or rule requirement*. The UIC permit program regulates underground injection by six classes of wells (see definition of ''well injection,'' §144.3). The six classes of wells are set forth in §144.6. All owners or operators of these injection wells must be authorized either by permit or rule by the Director. In carrying out the mandate of the SDWA, this subpart provides that no injection shall be authorized by permit or rule if it results in the movement of fluid containing any contaminant into underground sources of drinking water (USDWs—see §144.3 for definition), if the presence of that contaminant may cause a violation of any primary drinking water regulation under 40 CFR part 141 or may adversely affect the health of persons (§144.12). Existing Class IV wells which inject hazardous waste directly into an underground source of drinking water are to be eliminated over a period of six months and new such Class IV wells are to be prohibited (§144.13). For Class V wells, if remedial action appears necessary, a permit may be required (§144.25) or the Director must require remedial action or closure by order (§144.6(c)). During UIC program development, the Director may identify aquifers and portions of aquifers which are actual or potential sources of drinking water. This will provide an aid to the Director in carrying out his or her duty to protect all USDWs. An aquifer is a USDW if it fits the definition under §144.3, even if it has not been ''identified.'' The Director may also designate ''exempted aquifers'' using the criteria in 40 CFR 146.4 of this chapter. Such aquifers are those which would otherwise qualify as ''underground sources of drinking water'' to be protected, but which have no real potential to be used as drinking water sources. Therefore, they are not USDWs. No aquifer is an exempted aquifer until it has been affirmatively designated under the procedures at §144.7. Aquifers which do not fit the definition of ''underground source of drinking water'' are not ''exempted aquifers.'' They are simply not subject to the special protection afforded USDWs. During initial Class VI program development, the Director shall not expand the areal extent of an existing Class II enhanced oil recovery or enhanced gas recovery aquifer exemption for Class VI injection wells and EPA shall not approve a program that applies for aquifer exemption expansions of Class II–Class VI exemptions as

part of the program description. All Class II to Class VI aquifer exemption expansions previously issued by EPA must be incorporated into the Class VI program descriptions pursuant to requirements at § 145.23(f)(9).

(1) *Specific inclusions.* The following wells are included among those types of injection activities which are covered by the UIC regulations. (This list is not intended to be exclusive but is for clarification only.)

(i) Any injection well located on a drilling platform inside the State's territorial waters.

(ii) Any dug hole or well that is deeper than its largest surface dimension, where the principal function of the hole is emplacement of fluids.

(iii) Any well used by generators of hazardous waste, or by owners or operators of hazardous waste management facilities, to dispose of fluids containing hazardous waste. This includes the disposal of hazardous waste into what would otherwise be septic systems and cesspools, regardless of their capacity.

(iv) Any septic tank, cesspool, or other well used by a multiple dwelling, community, or Regional system for the injection of wastes.

(2) *Specific exclusions.* The following are not covered by these regulations:

(i) Injection wells located on a drilling platform or other site that is beyond the State's territorial waters.

(ii) Individual or single family residential waste disposal systems such as domestic cesspools or septic systems.

(iii) Non-residential cesspools, septic systems or similar waste disposal systems if such systems (A) Are used solely for the disposal of sanitary waste, and (B) have the capacity to serve fewer than 20 persons a day.

(iv) Injection wells used for injection of hydrocarbons which are of pipeline quality and are gases at standard temperature and pressure for the purpose of storage.

(v) Any dug hole, drilled hole, or bored shaft which is not used for the subsurface emplacement of fluids.

(3) The prohibition applicable to Class IV wells under § 144.13 does not apply to injections of hazardous wastes into aquifers or portions thereof which have been exempted pursuant to § 146.04.

(h) *Interim Status under RCRA for Class I Hazardous Waste Injection Wells.* The minimum national standards which define acceptable injection of hazardous waste during the period of interim status under RCRA are set out in the applicable provisions of this part, parts 146 and 147, and § 265.430 of this chapter. The issuance of a UIC permit does not automatically terminate RCRA interim status. A Class I well's interim status does, however, automatically terminate upon issuance to that well of a RCRA permit, or upon the well's receiving a RCRA permit-by-rule under § 270.60(b) of this chapter. Thus, until a Class I well injecting hazardous waste receives a RCRA permit or RCRA permit-by-rule, the well's interim status requirements are the applicable requirements imposed pursuant to this part and parts 146, 147, and 265 of this chapter, including any requirements imposed in the UIC permit.

[48 FR 14189, Apr. 1, 1983, as amended at 49 FR 20181, May 11, 1984; 52 FR 20676, June 2, 1987; 52 FR 45797, Dec. 1, 1987; 53 FR 28147, July 26, 1988; 64 FR 68565, Dec. 7, 1999; 67 FR 39592, June 7, 2002; 75 FR 77286, Dec. 10, 2010]

§ 144.2 Promulgation of Class II programs for Indian lands.

Notwithstanding the requirements of this part or parts 124 and 146 of this chapter, the Administrator may promulgate an alternate UIC Program for Class II wells on any Indian reservation or Indian lands. In promulgating such a program the Administrator shall consider the following factors:

(a) The interest and preferences of the tribal government having responsibility for the given reservation or Indian lands;

(b) The consistency between the alternate program and any program in effect in an adjoining jurisdiction; and

(c) Such other factors as are necessary and appropriate to carry out the Safe Drinking Water Act.

§ 144.3 Definitions.

Terms not defined in this section have the meaning given by the appropriate Act. When a defined term appears in a definition, the defined term

is sometimes placed within quotation marks as an aid to readers.

Administrator means the Administrator of the United States Environmental Protection Agency, or an authorized representative.

Application means the EPA standard national forms for applying for a permit, including any additions, revisions or modifications to the forms; or forms approved by EPA for use in approved States, including any approved modifications or revisions.

Appropriate Act and regulations means the Solid Waste Disposal Act, as amended by the Resource Conservation and Recovery Act (RCRA); or Safe Drinking Water Act (SDWA), whichever is applicable; and applicable regulations promulgated under those statutes.

Approved State Program means a UIC program administered by the State or Indian Tribe that has been approved by EPA according to SDWA sections 1422 and/or 1425.

Aquifer means a geological ''formation,'' group of formations, or part of a formation that is capable of yielding a significant amount of water to a well or spring.

Area of review means the area surrounding an injection well described according to the criteria set forth in §146.06 or in the case of an area permit, the project area plus a circumscribing area the width of which is either ¼ of a mile or a number calculated according to the criteria set forth in §146.06.

Cesspool means a ''drywell'' that receives untreated sanitary waste containing human excreta, and which sometimes has an open bottom and/or perforated sides.

Contaminant means any physical, chemical, biological, or radiological substance or matter in water.

Director means the Regional Administrator, the State director or the Tribal director as the context requires, or an authorized representative. When there is no approved State or Tribal program, and there is an EPA administered program, ''Director'' means the Regional Administrator. When there is an approved State or Tribal program, ''Director'' normally means the State or Tribal director. In some circumstances, however, EPA retains the authority to take certain actions even when there is an approved State or Tribal program. In such cases, the term ''Director'' means the Regional Administrator and not the State or Tribal director.

Draft permit means a document prepared under §124.6 indicating the Director's tentative decision to issue or deny, modify, revoke and reissue, terminate, or reissue a ''permit.'' A notice of intent to terminate a permit, and a notice of intent to deny a permit, as discussed in §124.5 are types of ''draft permits.'' A denial of a request for modification, revocation and reissuance, or termination, as discussed in §124.5 is not a ''draft permit.''

Drilling mud means a heavy suspension used in drilling an ''injection well,'' introduced down the drill pipe and through the drill bit.

Drywell means a well, other than an improved sinkhole or subsurface fluid distribution system, completed above the water table so that its bottom and sides are typically dry except when receiving fluids.

Eligible Indian Tribe is a Tribe that meets the statutory requirements established at 42 U.S.C. 300j-11(b)(1).

Emergency permit means a UIC ''permit'' issued in accordance with §144.34.

Environmental Protection Agency (''EPA'') means the United States Environmental Protection Agency.

EPA means the United States ''Environmental Protection Agency.''

Exempted aquifer means an ''aquifer'' or its portion that meets the criteria in the definition of ''underground source of drinking water'' but which has been exempted according to the procedures in §144.7.

Existing injection well means an ''injection well'' other than a ''new injection well.''

Facility or activity means any UIC ''injection well,'' or an other facility or activity that is subject to regulation under the UIC program.

Fluid means any material or substance which flows or moves whether in a semisolid, liquid, sludge, gas, or any other form or state.

Formation means a body of consolidated or unconsolidated rock characterized by a degree of lithologic homogeneity which is prevailingly, but not

necessarily, tabular and is mappable on the earth's surface or traceable in the subsurface.

Formation fluid means ''fluid'' present in a ''formation'' under natural conditions as opposed to introduced fluids, such as ''drilling mud.''

Generator means any person, by site location, whose act or process produces hazardous waste identified or listed in 40 CFR part 261.

Geologic sequestration means the long-term containment of a gaseous, liquid, or supercritical carbon dioxide stream in subsurface geologic formations. This term does not apply to carbon dioxide capture or transport.

Ground water means water below the land surface in a zone of saturation.

Hazardous waste means a hazardous waste as defined in 40 CFR 261.3.

Hazardous waste management facility (''HWM facility'') means all contiguous land, and structures, other appurtenances, and improvements on the land used for treating, storing, or disposing of hazardous waste. A facility may consist of several treatment, storage, or disposal operational units (for example, one or more landfills, surface impoundments, or combination of them).

HWM facility means ''Hazardous Waste Management facility''

Improved sinkhole means a naturally occurring karst depression or other natural crevice found in volcanic terrain and other geologic settings which have been modified by man for the purpose of directing and emplacing fluids into the subsurface.

Indian lands means ''Indian country'' as defined in 18 U.S.C. 1151. That section defines Indian country as:

(a) All land within the limits of any Indian reservation under the jurisdiction of the United States government, notwithstanding the issuance of any patent, and, including rights-of-way running through the reservation;

(b) All dependent Indian communities within the borders of the United States whether within the original or subsequently acquired territory thereof, and whether within or without the limits of a State; and

(c) All Indian allotments, the Indian titles to which have not been extinguished, including rights-of-way running through the same.

Indian Tribe means any Indian Tribe having a Federally recognized governing body carrying out substantial governmental duties and powers over a defined area.

Injection well means a ''well'' into which ''fluids'' are being injected.

Injection zone means a geological ''formation'' group of formations, or part of a formation receiving fluids through a ''well.''

Interstate Agency means an agency of two or more States established by or under an agreement or compact approved by the Congress, or any other agency of two or more States or Indian Tribes having substantial powers or duties pertaining to the control of pollution as determined and approved by the Administrator under the ''appropriate Act and regulations.''

Major facility means any UIC ''facility or activity'' classified as such by the Regional Administrator, or, in the case of approved State programs, the Regional Administrator in conjunction with the State Director.

Manifest means the shipping document originated and signed by the ''generator'' which contains the information required by subpart B of 40 CFR part 262.

New injection wells means an ''injection well'' which began injection after a UIC program for the State applicable to the well is approved or prescribed.

Owner or operator means the owner or operator of any ''facility or activity'' subject to regulation under the UIC program.

Permit means an authorization, license, or equivalent control document issued by EPA or an approved State to implement the requirements of this part, parts 145, 146 and 124. ''Permit'' includes an area permit (§ 144.33) and an emergency permit (§ 144.34). Permit does not include UIC authorization by rule (§ 144.21), or any permit which has not yet been the subject of final agency action, such as a ''draft permit.''

Person means an individual, association, partnership, corporation, municipality, State, Federal, or Tribal agency, or an agency or employee thereof.

Plugging means the act or process of stopping the flow of water, oil or gas

into or out of a formation through a borehole or well penetrating that formation.

Point of injection means the last accessible sampling point prior to waste fluids being released into the subsurface environment through a Class V injection well. For example, the point of injection of a Class V septic system might be the distribution box—the last accessible sampling point before the waste fluids drain into the underlying soils. For a dry well, it is likely to be the well bore itself.

Project means a group of wells in a single operation.

Radioactive Waste means any waste which contains radioactive material in concentrations which exceed those listed in 10 CFR part 20, appendix B, table II, column 2.

RCRA means the Solid Waste Disposal Act as amended by the Resource Conservation and Recovery Act of 1976 (Pub. L. 94–580, as amended by Pub. L. 95–609, Pub. L. 96–510, 42 U.S.C. 6901 *et seq.*).

Regional Administrator means the Regional Administrator of the appropriate Regional Office of the Environmental Protection Agency or the authorized representative of the Regional Administrator.

Sanitary waste means liquid or solid wastes originating solely from humans and human activities, such as wastes collected from toilets, showers, wash basins, sinks used for cleaning domestic areas, sinks used for food preparation, clothes washing operations, and sinks or washing machines where food and beverage serving dishes, glasses, and utensils are cleaned. Sources of these wastes may include single or multiple residences, hotels and motels, restaurants, bunkhouses, schools, ranger stations, crew quarters, guard stations, campgrounds, picnic grounds, day-use recreation areas, other commercial facilities, and industrial facilities provided the waste is not mixed with industrial waste.

Schedule of compliance means a schedule of remedial measures included in a ''permit,'' including an enforceable sequence of interim requirements (for example, actions, operations, or milestone events) leading to compliance with the ''appropriate Act and regulations.''

SDWA means the Safe Drinking Water Act (Pub. L. 93–523, as amended; 42 U.S.C. 300f *et seq.*).

Septic system means a ''well'' that is used to emplace sanitary waste below the surface and is typically comprised of a septic tank and subsurface fluid distribution system or disposal system.

Site means the land or water area where any ''facility or activity'' is physically located or conducted, including adjacent land used in connection with the facility or activity.

State means any of the 50 States, the District of Columbia, Guam, the Commonwealth of Puerto Rico, the Virgin Islands, American Samoa, the Trust Territory of the Pacific Islands, the Commonwealth of the Northern Mariana Islands, or an Indian Tribe treated as a State.

State Director means the chief administrative officer of any State, interstate, or Tribal agency operating an ''approved program,'' or the delegated representative of the State director. If the responsibility is divided among two or more States, interstate, or Tribal agencies, ''State Director'' means the chief administrative officer of the State, interstate, or Tribal agency authorized to perform the particular procedure or function to which reference is made.

State/EPA agreement means an agreement between the Regional Administrator and the State which coordinates EPA and State activities, responsibilities and programs.

Stratum (plural strata) means a single sedimentary bed or layer, regardless of thickness, that consists of generally the same kind of rock material.

Subsurface fluid distribution system means an assemblage of perforated pipes, drain tiles, or other similar mechanisms intended to distribute fluids below the surface of the ground.

Total dissolved solids means the total dissolved (filterable) solids as determined by use of the method specified in 40 CFR part 136.

Transferee means the owner or operator receiving ownership and/or operational control of the well.

Transferor means the owner or operator transferring ownership and/or operational control of the well.

UIC means the Underground Injection Control program under Part C of the Safe Drinking Water Act, including an ''approved State program.''

Underground injection means a ''well injection.''

Underground source of drinking water (USDW) means an aquifer or its portion:

(a)(1) Which supplies any public water system; or

(2) Which contains a sufficient quantity of ground water to supply a public water system; and

(i) Currently supplies drinking water for human consumption; or

(ii) Contains fewer than 10,000 mg/l total dissolved solids; and

(b) Which is not an exempted aquifer.

USDW means ''underground source of drinking water.''

Well means: A bored, drilled, or driven shaft whose depth is greater than the largest surface dimension; or, a dug hole whose depth is greater than the largest surface dimension; or, an improved sinkhole; or, a subsurface fluid distribution system.

Well injection means the subsurface emplacement of fluids through a well.

[48 FR 14189, Apr. 1, 1983, as amended at 49 FR 45305, Nov. 15, 1984; 52 FR 20676, June 2, 1987; 53 FR 37412, Sept. 26, 1988; 58 FR 63895, Dec. 3, 1993; 59 FR 64345, Dec. 14, 1994; 64 FR 68565, Dec. 7, 1999; 75 FR 77287, Dec. 10, 2010]

§ 144.4 Considerations under Federal law.

The following is a list of Federal laws that may apply to the issuance of permits under these rules. When any of these laws is applicable, its procedures must be followed. When the applicable law requires consideration or adoption of particular permit conditions or requires the denial of a permit, those requirements also must be followed.

(a) The *Wild and Scenic Rivers Act*, 16 U.S.C. 1273 *et seq*. Section 7 of the Act prohibits the Regional Administrator from assisting by license or otherwise the construction of any water resources project that would have a direct, adverse effect on the values for which a national wild and scenic river was established.

(b) *The National Historic Preservation Act of 1966*, 16 U.S.C. 470 *et seq*. Section 106 of the Act and implementing regulations (36 CFR part 800) require the Regional Administrator, before issuing a license, to adopt measures when feasible to mitigate potential adverse effects of the licensed activity and properties listed or eligible for listing in the National Register of Historic Places. The Act's requirements are to be implemented in cooperation with State Historic Preservation Officers and upon notice to, and when appropriate, in consultation with the Advisory Council on Historic Preservation.

(c) The *Endangered Species Act*, 16 U.S.C. 1531 *et seq*. Section 7 of the Act and implementing regulations (50 CFR part 402) require the Regional Administrator to ensure, in consultation with the Secretary of the Interior or Commerce, that any action authorized by EPA is not likely to jeopardize the continued existence of any endangered or threatened species or adversely affect its critical habitat.

(d) *The Coastal Zone Management Act*, 16 U.S.C. 1451 *et seq*. Section 307(c) of the Act and implementing regulations (15 CFR part 930) prohibit EPA from issuing a permit for an activity affecting land or water use in the coastal zone until the applicant certifies that the proposed activity complies with the State Coastal Zone Management program, and the State or its designated agency concurs with the certification (or the Secretary of Commerce overrides the States nonconcurrence).

(e) The *Fish and Wildlife Coordination Act*, 16 U.S.C. 661 *et seq*., requires the Regional Administrator, before issuing a permit proposing or authorizing the impoundment (with certain exemptions), diversion, or other control or modification of any body of water, consult with the appropriate State agency exercising jurisdiction over wildlife resources to conserve these resources.

(f) *Executive orders*. [Reserved]

(Clean Water Act (33 U.S.C. 1251 *et seq*.), Safe Drinking Water Act (42 U.S.C. 300f *et seq*.), Clean Air Act (42 U.S.C. 7401 *et seq*.), Resource Conservation and Recovery Act (42 U.S.C. 6901 *et seq*.))

[48 FR 14189, Apr. 1, 1983, as amended at 48 FR 39621, Sept. 1, 1983]

§ 144.5 Confidentiality of information.

(a) In accordance with 40 CFR part 2, any information submitted to EPA pursuant to these regulations may be claimed as confidential by the submitter. Any such claim must be asserted at the time of submission in the manner prescribed on the application form or instructions or, in the case of other submissions, by stamping the words ''confidential business information'' on each page containing such information. If no claim is made at the time of submission, EPA may make the information available to the public without further notice. If a claim is asserted, the information will be treated in accordance with the procedures in 40 CFR part 2 (Public Information).

(b) Claims of confidentiality for the following information will be denied:

(1) The name and address of any permit applicant or permittee;

(2) Information which deals with the existence, absence, or level of contaminants in drinking water.

§ 144.6 Classification of wells.

Injection wells are classified as follows:

(a) *Class I.* (1) Wells used by generators of hazardous waste or owners or operators of hazardous waste management facilities to inject hazardous waste beneath the lowermost formation containing, within one-quarter mile of the well bore, an underground source of drinking water.

(2) Other industrial and municipal disposal wells which inject fluids beneath the lowermost formation containing, within one quarter mile of the well bore, an underground source of drinking water.

(3) Radioactive waste disposal wells which inject fluids below the lowermost formation containing an underground source of drinking water within one quarter mile of the well bore.

(b) *Class II.* Wells which inject fluids:

(1) Which are brought to the surface in connection with natural gas storage operations, or conventional oil or natural gas production and may be commingled with waste waters from gas plants which are an intergral part of production operations, unless those waters are classified as a hazardous waste at the time of injection.

(2) For enhanced recovery of oil or natural gas; and

(3) For storage of hydrocarbons which are liquid at standard temperature and pressure.

(c) *Class III.* Wells which inject for extraction of minerals including:

(1) Mining of sulfur by the Frasch process;

(2) In situ production of uranium or other metals; this category includes only in-situ production from ore bodies which have not been conventionally mined. Solution mining of conventional mines such as stopes leaching is included in Class V.

(3) Solution mining of salts or potash.

(d) *Class IV.* (1) Wells used by generators of hazardous waste or of radioactive waste, by owners or operators of hazardous waste management facilities, or by owners or operators of radioactive waste disposal sites to dispose of hazardous waste or radioactive waste into a formation which within one-quarter (¼) mile of the well contains an underground source of drinking water.

(2) Wells used by generators of hazardous waste or of radioactive waste, by owners or operators of hazardous waste management facilities, or by owners or operators of radioactive waste disposal sites to dispose of hazardous waste or radioactive waste above a formation which within one-quarter (¼) mile of the well contains an underground source of drinking water.

(3) Wells used by generators of hazardous waste or owners or operators of hazardous waste management facilities to dispose of hazardous waste, which cannot be classified under paragraph (a)(1) or (d) (1) and (2) of this section (e.g., wells used to dispose of hazardous waste into or above a formation which contains an aquifer which has been exempted pursuant to § 146.04).

(e) *Class V.* Injection wells not included in Class I, II, III, IV, or VI. Specific types of Class V injection wells are described in § 144.81.

(f) *Class VI.* Wells that are not experimental in nature that are used for geologic sequestration of carbon dioxide

beneath the lowermost formation containing a USDW; or, wells used for geologic sequestration of carbon dioxide that have been granted a waiver of the injection depth requirements pursuant to requirements at § 146.95 of this chapter; or, wells used for geologic sequestration of carbon dioxide that have received an expansion to the areal extent of an existing Class II enhanced oil recovery or enhanced gas recovery aquifer exemption pursuant to §§ 146.4 of this chapter and 144.7(d).

[48 FR 14189, Apr. 1, 1983, as amended at 52 FR 20676, June 2, 1987; 64 FR 68565, Dec. 7, 1999; 75 FR 77287, Dec. 10, 2010]

§ 144.7 Identification of underground sources of drinking water and exempted aquifers.

(a) The Director may identify (by narrative description, illustrations, maps, or other means) and shall protect as underground sources of drinking water, all aquifers and parts of aquifers which meet the definition of ''underground source of drinking water'' in § 144.3, except to the extent there is an applicable aquifer exemption under paragraph (b) of this section or an expansion to the areal extent of an existing Class II enhanced oil recovery or enhanced gas recovery aquifer exemption for the exclusive purpose of Class VI injection for geologic sequestration under paragraph (d) of this section. Other than EPA approved aquifer exemption expansions that meet the criteria set forth in § 146.4(d) of this chapter, new aquifer exemptions shall not be issued for Class VI injection wells. Even if an aquifer has not been specifically identified by the Director, it is an underground source of drinking water if it meets the definition in § 144.3.

(b)(1) The Director may identify (by narrative description, illustrations, maps, or other means) and describe in geographic and/or geometric terms (such as vertical and lateral limits and gradient) which are clear and definite, all aquifers or parts thereof which the Director proposes to designate as exempted aquifers using the criteria in § 146.4 of this chapter.

(2) No designation of an exempted aquifer submitted as part of a UIC program shall be final until approved by the Administrator as part of a UIC program. No designation of an expansion to the areal extent of a Class II enhanced oil recovery or enhanced gas recovery aquifer exemption for the exclusive purpose of Class VI injection for geologic sequestration shall be final until approved by the Administrator as a revision to the applicable Federal UIC program under part 147 or as a substantial revision of an approved State UIC program in accordance with § 145.32 of this chapter.

(3) Subsequent to program approval or promulgation, the Director may, after notice and opportunity for a public hearing, identify additional exempted aquifers. For approved State programs exemption of aquifers identifed (i) under § 146.04(b) shall be treated as a program revision under § 145.32; (ii) under § 146.04(c) shall become final if the State Director submits the exemption in writing to the Administrator and the Administrator has not disapproved the designation within 45 days. Any disapproval by the Administrator shall state the reasons and shall constitute final Agency action for purposes of judicial review.

(c)(1) For Class III wells, the Director shall require an applicant for a permit which necessitates an aquifer exemption under § 146.04(b)(1) to furnish the data necessary to demonstrate that the aquifer is expected to be mineral or hydrocarbon producing. Information contained in the mining plan for the proposed project, such as a map and general description of the mining zone, general information on the mineralogy and geochemistry of the mining zone, analysis of the amenability of the mining zone to the proposed mining method, and a time-table of planned development of the mining zone shall be considered by the Director in addition to the information required by § 144.31(g).

(2) For Class II wells, a demonstration of commercial producibility shall be made as follows:

(i) For a Class II well to be used for enhanced oil recovery processes in a field or project containing aquifers from which hydrocarbons were previously produced, commercial producibility shall be presumed by the Director upon a demonstration by the

applicant of historical production having occurred in the project area or field.

(ii) For Class II wells not located in a field or project containing aquifers from which hydrocarbons were previously produced, information such as logs, core data, formation description, formation depth, formation thickness and formation parameters such as permeability and porosity shall be considered by the Director, to the extent such information is available.

(d) *Expansion to the areal extent of existing Class II aquifer exemptions for Class VI wells.* Owners or operators of Class II enhanced oil recovery or enhanced gas recovery wells may request that the Director approve an expansion to the areal extent of an aquifer exemption already in place for a Class II enhanced oil recovery or enhanced gas recovery well for the exclusive purpose of Class VI injection for geologic sequestration. Such requests must be treated as a revision to the applicable Federal UIC program under part 147 or as a substantial program revision to an approved State UIC program under § 145.32 of this chapter and will not be final until approved by EPA.

(1) The owner or operator of a Class II enhanced oil recovery or enhanced gas recovery well that requests an expansion of the areal extent of an existing aquifer exemption for the exclusive purpose of Class VI injection for geologic sequestration must define (by narrative description, illustrations, maps, or other means) and describe in geographic and/or geometric terms (such as vertical and lateral limits and gradient) that are clear and definite, all aquifers or parts thereof that are requested to be designated as exempted using the criteria in § 146.4 of this chapter.

(2) In evaluating a request to expand the areal extent of an aquifer exemption of a Class II enhanced oil recovery or enhanced gas recovery well for the purpose of Class VI injection, the Director must determine that the request meets the criteria for exemptions in § 146.4. In making the determination, the Director shall consider:

(i) Current and potential future use of the USDWs to be exempted as drinking water resources;

(ii) The predicted extent of the injected carbon dioxide plume, and any mobilized fluids that may result in degradation of water quality, over the lifetime of the GS project, as informed by computational modeling performed pursuant to § 146.84(c)(1), in order to ensure that the proposed injection operation will not at any time endanger USDWs including non-exempted portions of the injection formation;

(iii) Whether the areal extent of the expanded aquifer exemption is of sufficient size to account for any possible revisions to the computational model during reevaluation of the area of review, pursuant to § 146.84(e); and

(iv) Any information submitted to support a waiver request made by the owner or operator under § 146.95, if appropriate.

[48 FR 14189, Apr. 1, 1983, as amended at 75 FR 77287, Dec. 10, 2010]

§ 144.8 Noncompliance and program reporting by the Director.

The Director shall prepare quarterly and annual reports as detailed below. When the State is the permit-issuing authority, the State Director shall submit any reports required under this section to the Regional Administrator. When EPA is the permit-issuing authority, the Regional Administrator shall submit any report required under this section to EPA Headquarters.

(a) *Quarterly reports.* The Director shall submit quarterly narrative reports for major facilities as follows:

(1) *Format.* The report shall use the following format:

(i) Provide an alphabetized list of permittees. When two or more permittees have the same name, the lowest permit number shall be entered first.

(ii) For each entry on the list, include the following information in the following order:

(A) Name, location, and permit number of the noncomplying permittees.

(B) A brief description and date of each instance of noncompliance for that permittee. Instances of noncompliance may include one or more the kinds set forth in paragraph (a)(2) of this section. When a permittee has noncompliance of more than one kind, combine the information into a single entry for each such permittee.

(C) The date(s) and a brief description of the action(s) taken by the Director to ensure compliance.

(D) Status of the instance(s) of noncompliance with the date of the review of the status or the date of resolution.

(E) Any details which tend to explain or mitigate the instance(s) of noncompliance.

(2) *Instances of noncompliance to be reported.* Any instances of noncompliance within the following categories shall be reported in successive reports until the noncompliance is reported as resolved. Once noncompliance is reported as resolved it need not appear in subsequent reports.

(i) *Failure to complete construction elements.* When the permittee has failed to complete, by the date specified in the permit, an element of a compliance schedule involving either planning for construction or a construction step (for example, begin construction, attain operation level); and the permittee has not returned to compliance by accomplishing the required elements of the schedule within 30 days from the date a compliance schedule report is due under the permit.

(ii) *Modifications to schedules of compliance.* When a schedule of compliance in the permit has been modified under §§ 144.39 or 144.41 because of the permittee's noncompliance.

(iii) *Failure to complete or provide compliance schedule or monitoring reports.* When the permittee has failed to complete or provide a report required in a permit compliance schedule (for example, progress report or notice of noncompliance or compliance) or a monitoring report; and the permittee has not submitted the complete report within 30 days from the date it is due under the permit for compliance schedules, or from the date specified in the permit for monitoring reports.

(iv) *Deficient reports.* When the required reports provided by the permittee are so deficient as to cause misunderstanding by the Director and thus impede the review of the status of compliance.

(v) *Noncompliance with other permit requirements.* Noncompliance shall be reported in the following circumstances:

(A) Whenever the permittee has violated a permit requirement (other than reported under paragraph (a)(2) (i) or (ii) of this section), and has not returned to compliance within 45 days from the date reporting of noncompliance was due under the permit; or

(B) When the Director determines that a pattern of noncompliance exists for a major facility permittee over the most recent four consecutive reporting periods. This pattern includes any violation of the same requirement in two consecutive reporting periods, and any violation of one or more requirements in each of four consecutive reporting periods; or

(C) When the Director determines significant permit noncompliance or other significant event has occurred, such as a migration of fluids into a USDW.

(vi) *All other.* Statistical information shall be reported quarterly on all other instances of noncompliance by major facilities with permit requirements not otherwise reported under paragraph (a) of this section.

(b) *Annual reports*—(1) *Annual noncompliance report.* Statistical reports shall be submitted by the Director on nonmajor UIC permittees indicating the total number reviewed, the number of noncomplying nonmajor permittees, the number of enforcement actions, and number of permit modifications extending compliance deadlines. The statistical information shall be organized to follow the types of noncompliance listed in paragraph (a) of this section.

(2) *For State-administered UIC Programs only.* In addition to the annual noncompliance report, the State Director shall:

(i) Submit each year a program report to the Administrator (in a manner and form prescribed by the Administrator) consisting of:

(A) A detailed description of the State's implementation of its program;

(B) Suggested changes, if any to the program description (see § 145.23(f)) which are necessary to reflect more accurately the State's progress in issuing permits;

(C) An updated inventory of active underground injection operations in the State.

(ii) In addition to complying with the requirements of paragraph (b)(2)(i) of

this section, the Director shall provide the Administrator, on February 28th and August 31st of each of the first two years of program operation, the information required in 40 CFR 146.15, 146.25, and 146.35.

(iii) All Class VI program reports shall be consistent with reporting requirements set forth in § 146.91 of this chapter.

(c) *Schedule*. (1) For all quarterly reports. On the last working day of May, August, November, and February, the State Director shall submit to the Regional Administrator information concerning noncompliance with permit requirements by major facilities in the State in accordance with the following schedule. The Regional Administrator shall prepare and submit information for EPA-issued permits to EPA Headquarters in accordance with the same schedule.

QUARTERS COVERED BY REPORTS ON NONCOMPLIANCE BY MAJOR FACILITIES

[Date for completion of reports]

January, February, and March	[1] May 31
April, May, and June	[1] Aug. 31
July, August, and September	[1] Nov. 30
October, November, and December	[1] Feb. 28

[1] Reports must be made available to the public for inspection and copying on this date.

(2) *For all annual reports*. The period for annual reports shall be for the calendar year ending December 31, with reports completed and available to the public no more than 60 days later.

[48 FR 14189, Apr. 1, 1983, as amended at 75 FR 77287, Dec. 10, 2010]

Subpart B—General Program Requirements

§ 144.11 Prohibition of unauthorized injection.

Any underground injection, except into a well authorized by rule or except as authorized by permit issued under the UIC program, is prohibited. The construction of any well required to have a permit is prohibited until the permit has been issued.

[48 FR 14189, Apr. 1, 1983, as amended at 58 FR 63895, Dec. 3, 1993]

§ 144.12 Prohibition of movement of fluid into underground sources of drinking water.

(a) No owner or operator shall construct, operate, maintain, convert, plug, abandon, or conduct any other injection activity in a manner that allows the movement of fluid containing any contaminant into underground sources of drinking water, if the presence of that contaminant may cause a violation of any primary drinking water regulation under 40 CFR part 142 or may otherwise adversely affect the health of persons. The applicant for a permit shall have the burden of showing that the requirements of this paragraph are met.

(b) For Class I, II, III, and VI wells, if any water quality monitoring of an underground source of drinking water indicates the movement of any contaminant into the underground source of drinking water, except as authorized under part 146, the Director shall prescribe such additional requirements for construction, corrective action, operation, monitoring, or reporting (including closure of the injection well) as are necessary to prevent such movement. In the case of wells authorized by permit, these additional requirements shall be imposed by modifying the permit in accordance with § 144.39, or the permit may be terminated under § 144.40 if cause exists, or appropriate enforcement action may be taken if the permit has been violated. In the case of wells authorized by rule, see §§ 144.21 through 144.24. For EPA administered programs, such enforcement action shall be taken in accordance with appropriate sections of the SDWA.

(c) For Class V wells, if at any time the Director learns that a Class V well may cause a violation of primary drinking water regulations under 40 CFR part 142, he or she shall:

(1) Require the injector to obtain an individual permit;

(2) Order the injector to take such actions (including, where required, closure of the injection well) as may be necessary to prevent the violation. For EPA administered programs, such orders shall be issued in accordance with the appropriate provisions of the SDWA; or

(3) Take enforcement action.

(d) Whenever the Director learns that a Class V well may be otherwise adversely affecting the health of persons, he or she may prescribe such actions as may be necessary to prevent the adverse effect, including any action authorized under paragraph (c) of this section.

(e) Notwithstanding any other provision of this section, the Director may take emergency action upon receipt of information that a contaminant which is present in or likely to enter a public water system or underground source of drinking water may present an imminent and substantial endangerment to the health of persons. If the Director is an EPA official, he must first determine that the appropriate State and local authorities have not taken appropriate action to protect the health of such persons, before taking emergency action.

[48 FR 14189, Apr. 1, 1983, as amended at 52 FR 20676, June 2, 1987; 75 FR 77288, Dec. 10, 2010]

§ 144.13 Prohibition of Class IV wells.

(a) The following are prohibited, except as provided in paragraph (c) of this section:

(1) The construction of any Class IV well.

(2) The operation or maintenance of any Class IV well not in operation prior to July 18, 1980.

(3) The operation or maintenance of any Class IV well that was in operation prior to July 18, 1980, after six months following the effective date of a UIC program approved or promulgated for the state.

(4) Any increase in the amount of hazardous waste or change in the type of hazardous waste injected into a Class IV well.

(b) The owner or operator of a Class IV well shall comply with the requirements of § 144.14, and with the requirements of § 144.23 regarding closure of Class IV wells.

(c) Wells used to inject contaminated ground water that has been treated and is being reinjected into the same formation from which it was drawn are not prohibited by this section if such injection is approved by EPA, or a State, pursuant to provisions for cleanup of releases under the Comprehensive Environmental Response, Compensation, and Liability Act of 1980 (CERCLA), 42 U.S.C. 9601–9657, or pursuant to requirements and provisions under the Resource Conservation and Recovery Act (RCRA), 42 U.S.C. 6901 through 6987.

(d) *Clarification.* The following wells are not prohibited by this action:

(1) Wells used to inject hazardous waste into aquifers or portions thereof that have been exempted pursuant to § 146.4, if the exempted aquifer into which waste is injected underlies the lowermost formation containing a USDW. Such wells are Class I wells as specified in § 144.6(a)(1), and the owner or operator must comply with the requirements applicable to Class I wells.

(2) Wells used to inject hazardous waste where no USDW exists within one quarter mile of the well bore in any underground formation, provided that the Director determines that such injection is into a formation sufficiently isolated to ensure that injected fluids do not migrate from the injection zone. Such wells are Class I wells as specified in § 144.6(a)(1), and the owner or operator must comply with the requirements applicable to Class I wells.

[49 FR 20181, May 11, 1984, as amended at 67 FR 39593, June 7, 2002]

§ 144.14 Requirements for wells injecting hazardous waste.

(a) *Applicability.* The regulations in this section apply to all generators of hazardous waste, and to the owners or operators of all hazardous waste management facilities, using any class of well to inject hazardous wastes accompanied by a manifest. (See also § 144.13.)

(b) *Authorization.* The owner or operator of any well that is used to inject hazardous waste required to be accompanied by a manifest or delivery document shall apply for authorization to inject as specified in § 144.31 within 6 months after the approval or promulgation of the State UIC program.

(c) *Requirements.* In addition to complying with the applicable requirements of this part and 40 CFR part 146, the owner or operator of each facility meeting the requirements of paragraph (b) of this section, shall comply with the following:

(1) *Notification*. The owner or operator shall comply with the notification requirements of section 3010 of Public Law 94–580.

(2) *Identification number*. The owner or operator shall comply with the requirements of 40 CFR 264.11.

(3) *Manifest system*. The owner or operator shall comply with the applicable recordkeeping and reporting requirements for manifested wastes in 40 CFR 264.71.

(4) *Manifest discrepancies*. The owner or operator shall comply with 40 CFR 264.72.

(5) *Operating record*. The owner or operator shall comply with 40 CFR 264.73(a), (b)(1), and (b)(2).

(6) *Annual report*. The owner or operator shall comply with 40 CFR 264.75.

(7) *Unmanifested waste report*. The owner or operator shall comply with 40 CFR 264.75.

(8) *Personnel training*. The owner or operator shall comply with the applicable personnel training requirements of 40 CFR 264.16.

(9) *Certification of closure*. When abandonment is completed, the owner or operator must submit to the Director certification by the owner or operator and certification by an independent registered professional engineer that the facility has been closed in accordance with the specifications in § 144.52(a)(6).

(d) *Additional requirements for Class IV wells*. [Reserved]

§ 144.15 Prohibition of non-experimental Class V wells for geologic sequestration.

The construction, operation or maintenance of any non-experimental Class V geologic sequestration well is prohibited.

[75 FR 77288, Dec. 10, 2010]

§ 144.16 Waiver of requirement by Director.

(a) *When injection does not occur into, through or above an underground source of drinking water*, the Director may authorize a well or project with less stringent requirements for area of review, construction, mechanical integrity, operation, monitoring, and reporting than required in 40 CFR part 146 or § 144.52 to the extent that the reduction in requirements will not result in an increased risk of movement of fluids into an underground source of drinking water.

(b) When injection occurs through or above an underground source of drinking water, but the radius of endangering influence when computed under § 146.06(a) is smaller or equal to the radius of the well, the Director may authorize a well or project with less stringent requirements for operation, monitoring, and reporting than required in 40 CFR part 146 or § 144.52 to the extent that the reduction in requirements will not result in an increased risk of movement of fluids into an underground source of drinking water.

(c) When reducing requirements under paragraph (a) or (b) of this section, the Director shall prepare a fact sheet under § 124.8 explaining the reasons for the action.

§ 144.17 Records.

The Director or the Administrator may require, by written notice on a selective well-by-well basis, an owner or operator of an injection well to establish and maintain records, make reports, conduct monitoring, and provide other information as is deemed necessary to determine whether the owner or operator has acted or is acting in compliance with Part C of the SDWA or its implementing regulations.

[58 FR 63895, Dec. 3, 1993]

§ 144.18 Requirements for Class VI wells.

Owners or operators of Class VI wells must obtain a permit. Class VI wells cannot be authorized by rule to inject carbon dioxide.

[75 FR 77288, Dec. 10, 2010]

§ 144.19 Transitioning from Class II to Class VI.

(a) Owners or operators that are injecting carbon dioxide for the primary purpose of long-term storage into an oil and gas reservoir must apply for and obtain a Class VI geologic sequestration permit when there is an increased risk to USDWs compared to Class II operations. In determining if there is an increased risk to USDWs,

the owner or operator must consider the factors specified in § 144.19(b).

(b) The Director shall determine when there is an increased risk to USDWs compared to Class II operations and a Class VI permit is required. In order to make this determination the Director must consider the following:

(1) Increase in reservoir pressure within the injection zone(s);

(2) Increase in carbon dioxide injection rates;

(3) Decrease in reservoir production rates;

(4) Distance between the injection zone(s) and USDWs;

(5) Suitability of the Class II area of review delineation;

(6) Quality of abandoned well plugs within the area of review;

(7) The owner's or operator's plan for recovery of carbon dioxide at the cessation of injection;

(8) The source and properties of injected carbon dioxide; and

(9) Any additional site-specific factors as determined by the Director.

[75 FR 77288, Dec. 10, 2010]

Subpart C—Authorization of Underground Injection by Rule

§ 144.21 Existing Class I, II (except enhanced recovery and hydrocarbon storage) and III wells.

(a) An existing Class I, II (except enhanced recovery and hydrocarbon storage) and III injection well is authorized by rule if the owner or operator injects into the existing well within one year after the date at which a UIC program authorized under the SDWA becomes effective for the first time or inventories the well pursuant to the requirements of § 144.26. An owner or operator of a well which is authorized by rule pursuant to this section shall rework, operate, maintain, convert, plug, abandon or inject into the well in compliance with applicable regulations.

(b) *Duration of well authorization by rule.* Well authorization under this section expires upon the effective date of a permit issued pursuant to §§ 144.25, 144.31, 144.33 or 144.34; after plugging and abandonment in accordance with an approved plugging and abandonment plan pursuant to §§ 144.28(c) and 146.10, and upon submission of a plugging and abandonment report pursuant to § 144.28(k); or upon conversion in compliance with § 144.28(j).

(c) *Prohibitions on injection.* An owner or operator of a well authorized by rule pursuant to this section is prohibited from injecting into the well:

(1) Upon the effective date of an applicable permit denial;

(2) Upon failure to submit a permit application in a timely manner pursuant to §§ 144.25 or 144.31;

(3) Upon failure to submit inventory information in a timely manner pursuant to § 144.26;

(4) Upon failure to comply with a request for information in a timely manner pursuant to § 144.27;

(5) Upon failure to provide alternative financial assurance pursuant to § 144.28(d)(7);

(6) Forty-eight hours after receipt of a determination by the Director pursuant to § 144.28(f)(3) that the well lacks mechanical integrity, unless the Director requires immediate cessation;

(7) Upon receipt of notification from the Director pursuant to § 144.28(l) that the transferee has not demonstrated financial responsibility pursuant to § 144.28(d);

(8) For Class I and III wells:

(i) In States with approved programs, five years after the effective date of the UIC program unless a timely and complete permit application is pending the Director's decision; or

(ii) In States with programs administered by EPA, one year after the effective date of the UIC program unless a timely and complete permit application is pending the Director's decision; or

(9) For Class II wells (except enhanced recovery and hydrocarbon storage), five years after the effective date of the UIC program unless a timely and complete permit application is pending the Director's decision.

(d) *Class II and III wells in existing fields or projects.* Notwithstanding the prohibition in § 144.11, this section authorizes Class II and Class III wells or projects in existing fields or projects to continue normal operations until permitted, including construction, operation, and plugging and abandonment of wells as part of the operation, provided the owner or operator maintains

compliance with all applicable requirements.

(e) *Requirements*. The owner or operator of a well authorized under this section shall comply with the applicable requirements of § 144.28 and part 147 of this chapter no later than one year after authorization.

[48 FR 14189, Apr. 1, 1983, as amended at 49 FR 20181, May 11, 1984; 58 FR 63895, Dec. 3, 1993]

§ 144.22 Existing Class II enhanced recovery and hydrocarbon storage wells.

(a) An existing Class II enhanced recovery or hydrocarbon storage injection well is authorized by rule for the life of the well or project, if the owner or operator injects into the existing well within one year after the date which a UIC program authorized under the SDWA becomes effective for the first time or inventories the well pursuant to the requirements of § 144.26. An owner or operator of a well which is authorized by rule pursuant to this section shall rework, operate, maintain, convert, plug, abandon or inject into the well in compliance with applicable regulations.

(b) *Duration of well authorization by rule*. Well authorization under this section expires upon the effective date of a permit issued pursuant to § 144.19, § 144.25, § 144.31, § 144.33 or § 144.34; after plugging and abandonment in accordance with an approved plugging and abandonment plan pursuant to §§ 144.28(c) and 146.10 of this chapter; and upon submission of a plugging and abandonment report pursuant to § 144.28(k); or upon conversion in compliance with § 144.28(j).

(c) *Prohibitions on injection*. An owner or operator of a well authorized by rule pursuant to this section is prohibited from injecting into the well:

(1) Upon the effective date of an applicable permit denial;

(2) Upon failure to submit a permit application in a timely manner pursuant to § 144.25 or § 144.31;

(3) Upon failure to submit inventory information in a timely manner pursuant to § 144.26;

(4) Upon failure to comply with a request for information in a timely manner pursuant to § 144.27;

(5) Upon failure to provide alternative financial assurance pursuant to § 144.28(d)(7);

(6) Forty-eight hours after receipt of a determination by the Director pursuant to § 144.28(f)(3) that the well lacks mechanical integrity, unless the Director requires immediate cessation; or

(7) Upon receipt of notification from the Director pursuant to § 144.28(l) that the transferee has not demonstrated financial responsibility pursuant to § 144.28(d).

(d) *Requirements*. The owner or operator of a well authorized under this section shall comply with the applicable requirements of § 144.28 and part 147 of this chapter. Such owner or operator shall comply with the casing and cementing requirements no later than 3 years and other requirements no later than 1 year after authorization.

[49 FR 20181, May 11, 1984, as amended at 58 FR 63896, Dec. 3, 1993; 75 FR 77288, Dec. 10, 2010]

§ 144.23 Class IV wells.

(a) Injection into existing Class IV wells is authorized for up to six months after approval or promulgation of the UIC Program. Such wells are subject to the requirements of §§ 144.13 and 144.14(c).

(b) *Closure*. For EPA administered programs only,

(1) Prior to abandoning any Class IV well, the owner or operator shall plug or otherwise close the well in a manner acceptable to the Regional Administrator.

(2) [Reserved]

(3) The owner or operator of a Class IV well must notify the Regional Administrator of intent to abandon the well at least thirty days prior to abandonment.

(c) Notwithstanding the requirements of paragraphs (a) and (b) of this section, injection wells used to inject contaminated ground water that has been treated and is being injected into the same formation from which it was drawn are authorized by rule for the life of the well if such subsurface emplacement of fluids is approved by EPA, or a State, pursuant to provisions for cleanup of releases under the Comprehensive Environmental Response, Compensation, and Liability Act of

1980 (CERCLA), 42 U.S.C. 9601–9675, or pursuant to requirements and provisions under the Resource Conservation and Recovery Act (RCRA), 42 U.S.C. 6901–6992k.

[49 FR 20181, May 11, 1984, as amended at 60 FR 33932, June 29, 1995; 64 FR 68566, Dec. 7, 1999]

§ 144.24 Class V wells.

(a) A Class V injection well is authorized by rule, subject to the conditions in § 144.84

(b) *Duration of well authorization by rule.* Well authorization under this section expires upon the effective date of a permit issued pursuant to §§ 144.25, 144.31, 144.33 or 144.34, or upon proper closure of the well.

(c) *Prohibition of injection.* An owner or operator of a well which is authorized by rule pursuant to this section is prohibited from injecting into the well:

(1) Upon the effective date of an applicable permit denial;

(2) Upon failure to submit a permit application in a timely manner pursuant to §§ 144.25 or 144.31;

(3) Upon failure to submit inventory information in a timely manner pursuant to § 144.26; or

(4) Upon failure to comply with a request for information in a timely manner pursuant to § 144.27.

[58 FR 63896, Dec. 3, 1993, as amended at 64 FR 68566, Dec. 7, 1999]

§ 144.25 Requiring a permit.

(a) The Director may require the owner or operator of any Class I, II, III or V injection well which is authorized by rule under this subpart to apply for and obtain an individual or area UIC permit. Cases where individual or area UIC permits may be required include:

(1) The injection well is not in compliance with any requirement of the rule;

NOTE: Any underground injection which violates any authorization by rule is subject to appropriate enforcement action.

(2) The injection well is not or no longer is within the category of wells and types of well operations authorized in the rule;

(3) The protection of USDWs requires that the injection operation be regulated by requirements, such as for corrective action, monitoring and reporting, or operation, which are not contained in the rule.

(4) When the injection well is a Class I, II (except existing enhanced recovery and hydrocarbon storage) or III well, in accordance with a schedule established by the Director pursuant to § 144.31(c).

(b) For EPA-administered programs, the Regional Administrator may require an owner or operator of any well which is authorized by rule under this subpart to apply for an individual or area UIC permit under this paragraph only if the owner or operator has been notified in writing that a permit application is required. The owner or operator of a well which is authorized by rule under this subpart is prohibited from injecting into the well upon the effective date of permit denial, or upon failure by the owner or operator to submit an application in a timely manner as specified in the notice. The notice shall include: a brief statement of the reasons for requiring a permit; an application form; a statement setting a time for the owner or operator to file the application; and a statement of the consequences of denial or issuance of the permit, or failure to submit an application, as described in this paragraph.

(c) An owner or operator of a well authorized by rule may request to be excluded from the coverage of this subpart by applying for an individual or area UIC permit. The owner or operator shall submit an application under § 144.31 with reasons supporting the request, to the Director. The Director may grant any such requests.

[48 FR 14189, Apr. 1, 1983, as amended at 49 FR 20182, May 11, 1984; 58 FR 63896, Dec. 3, 1993]

§ 144.26 Inventory requirements.

The owner or operator of an injection well which is authorized by rule under this subpart shall submit inventory information to the Director. Such an owner or operator is prohibited from injecting into the well upon failure to submit inventory information for the well within the time frame specified in paragraph (d) of this section.

(a) *Contents.* As part of the inventory, the Director shall require and the owner/operator shall provide at least the following information:

(1) Facility name and location;

(2) Name and address of legal contact;

(3) Ownership of facility;

(4) Nature and type of injection wells; and

(5) Operating status of injection wells.

NOTE: This information is requested on national form ''Inventory of Injection Wells,'' OMB No. 158–R0170.

(b) *Additional contents.* For EPA administered programs only, the owner or operator of a well listed in paragraph (b)(1) of this section shall provide the information listed in paragraph (b)(2) of this section.

(1) This section applies to the following wells:

(i) Class II enhanced recovery wells;

(ii) Class IV wells;

(iii) The following Class V wells:

(A) Sand or other backfill wells [§ 146.5(e)(8)];

(B) Radioactive waste disposal wells that are not Class I wells (40 CFR 146.5 (e)(11))

(C) Geothermal energy recovery wells [§ 146.5(e)(12)];

(D) Brine return flow wells [§ 146.5(e)(14)];

(E) Wells used in experimental technologies [§ 146.5(e)(15)];

(F) Municipal and industrial disposal wells other than Class I; and

(G) Any other Class V wells at the discretion of the Regional Administrator.

(2) The owner or operator of a well listed in paragraph (b)(1) shall provide a listing of all wells owned or operated setting forth the following information for each well. (A single description of wells at a single facility with substantially the same characteristics is acceptable).

(i) For Class II only, the field name(s);

(ii) Location of each well or project given by Township, Range, Section, and Quarter-Section, or by latitude and longitude to the nearest second, according to the conventional practice in the State;

(iii) Date of completion of each well;

(iv) Identification and depth of the formation(s) into which each well is injecting;

(v) Total depth of each well;

(vi) Casing and cementing record, tubing size, and depth of packer;

(vii) Nature of the injected fluids;

(viii) Average and maximum injection pressure at the wellhead;

(ix) Average and maximum injection rate; and

(x) Date of the last mechanical integrity test, if any.

(c) *Notice.* Upon approval of the UIC Program in a State, the Director shall notify owners or operators of injection wells of their duty to submit inventory information. The method of notification selected by the Director must assure that the owners or operators will be made aware of the inventory requirement.

(d) *Deadlines.* (1) The owner or operator of an injection well shall submit inventory information no later than one year after the date of approval or effective date of the UIC program for the State. The Director need not require inventory information from any facility with interim status under RCRA.

(2) For EPA administered programs the information need not be submitted if a complete permit application is submitted within one year of the effective data of the UIC program. The owner or operator of Class IV well shall submit inventory information no later than 60 days after the effective date of the program.

[48 FR 14189, Apr. 1, 1983, as amended at 49 FR 20182, May 11, 1984; 58 FR 63896, Dec. 3, 1993; 64 FR 68566, Dec. 7, 1999; 67 FR 39593, June 7, 2002]

§ 144.27 Requiring other information.

(a) For EPA administered programs only, in addition to the inventory requirements of § 144.26, the Regional Administrator may require the owner or operator of any well authorized by rule under this subpart to submit information as deemed necessary by the Regional Administrator to determine whether a well may be endangering an underground source of drinking water in violation of § 144.12 of this part.

(b) Such information requirements may include, but are not limited to:

(1) Performance of ground-water monitoring and the periodic submission of reports of such monitoring;

(2) An analysis of injected fluids, including periodic submission of such analyses; and

(3) A description of the geologic strata through and into which injection is taking place.

(c) Any request for information under this section shall be made in writing, and include a brief statement of the reasons for requiring the information. An owner or operator shall submit the information within the time period(s) provided in the notice.

(d) An owner or operator of an injection well authorized by rule under this subpart is prohibited from injecting into the well upon failure of the owner or operator to comply with a request for information within the time period(s) specified by the Director pursuant to paragraph (c) of this section. An owner or operator of a well prohibited from injection under this section shall not resume injection except under a permit issued pursuant to §§144.25, 144.31, 144.33 or 144.34.

[49 FR 20182, May 11, 1984, as amended at 58 FR 63896, Dec. 3, 1993]

§ 144.28 Requirements for Class I, II, and III wells authorized by rule.

The following requirements apply to the owner or operator of a Class I, II or III well authorized by rule under this subpart, as provided by §§144.21(e) and 144.22(d).

(a) The owner or operator shall comply with all applicable requirements of this subpart and subpart B of this part. Any noncompliance with these requirements constitutes a violation of the Safe Drinking Water Act and is grounds for enforcement action, except that the owner or operator need not comply with these requirements to the extent and for the duration such noncompliance is authorized by an emergency permit under §144.34.

(b) *Twenty-four hour reporting.* The owner or operator shall report any noncompliance which may endanger health or the environment, including:

(1) Any monitoring or other information which indicates that any contaminant may cause an endangerment to a USDW; or

(2) Any noncompliance or malfunction of the injection system which may cause fluid migration into or between USDWs.

Any information shall be provided orally within 24 hours from the time the owner or operator becomes aware of the circumstances. A written submission shall also be provided within five days of the time the owner or operator becomes aware of the circumstances. The written submission shall contain a description of the noncompliance and its cause, the period of noncompliance, including exact dates and times, and if the noncompliance has not been corrected, the anticipated time it is expected to continue; and steps taken or planned to reduce, eliminate, and prevent recurrence of the noncompliance.

(c) *Plugging and abandonment plan.* (1) The owner or operator shall prepare, maintain, and comply with a plan for plugging and abandonment of the well or project that meets the requirements of §146.10 of this chapter and is acceptable to the Director. For purposes of this paragraph, temporary intermittent cessation of injection operations is not abandonment.

(2) For EPA administered programs:

(i) The owner or operator shall submit the plan, on a form provided by the Regional Administrator, no later than one year after the effective date of the UIC program in the state.

(ii) The owner or operator shall submit any proposed significant revision to the method of plugging reflected in the plan no later than the notice of plugging required by §144.28(j)(2) (*i.e.*, 45 days prior to plugging unless shorter notice is approved).

(iii) The plan shall include the following information:

(A) The nature and quantity and material to be used in plugging;

(B) The location and extent (by depth) of the plugs;

(C) Any proposed test or measurement to be made;

(D) The amount, size, and location (by depth) of casing to be left in the well;

(E) The method and location where casing is to be parted; and

(F) [Reserved]

(G) The estimated cost of plugging the well.

(iv) After a cessation of operations of two years the owner or operator shall

plug and abandon the well in accordance with the plan unless he:

(A) Provides notice to the Regional Administrator;

(B) Describe actions or procedures, satisfactory to the Regional Administrator, that the owner or operator will take to ensure that the well will not endanger USDWs during the period of temporary abandonment. These actions and procedures shall include compliance with the technical requirements applicable to active injection wells unless waived by the Regional Administrator.

(v) The owner or operator of any well that has been temporarily abandoned [ceased operations for more than two years and has met the requirements of paragraphs (c)(2) (A) and (B) of this section] shall notify the Regional Administrator prior to resuming operation of the well.

(d) *Financial responsibility*. (1) The owner, operator and/or, for EPA-administered programs, the transferor of a Class I, II or III well, is required to demonstrate and maintain financial responsibility and resources to close, plug and abandon the underground injection operation in a manner prescribed by the Director until:

(i) The well has been plugged and abandoned in accordance with an approved plugging and abandonment plan pursuant to §§144.28(c) and 146.10 and submission of a plugging and abandonment report has been made pursuant to §144.28(k);

(ii) The well has been converted in compliance with the requirements of §144.28(j); or

(iii) For EPA-administered programs, the transferor has received notice from the Director that the transferee has demonstrated financial responsibility for the well. The owner or operator shall show evidence of such financial responsibility to the Director by the submission of a surety bond, or other adequate assurance, such as a financial statement.

(2) For EPA-administered programs, the owner or operator shall submit such evidence no later than one year after the effective date of the UIC program in the State. Where the ownership or operational control of the well is transferred more than one year after the effective date of the UIC program, the transferee shall submit such evidence no later than the date specified in the notice required pursuant to §144.28(l)(2).

(3) For EPA administered programs the Regional Administrator may require the owner or operator to submit a revised demonstration of financial responsibility if the Regional Administrator has reason to believe that the original demonstration is no longer adequate to cover the cost of closing, plugging and abandoning the well.

(4) For EPA administered programs the owner or operator of a well injecting hazardous waste must comply with the financial responsibility requirements of subpart F of this part.

(5) For EPA-administered programs, an owner or operator must notify the Regional Administrator by certified mail of the commencement of any voluntary or involuntary proceeding under Title 11 (Bankruptcy) of the United States Code which names the owner or operator as debtor, within 10 business days after the commencement of the proceeding. Any party acting as guarantor for the owner or operator for the purpose of financial responsibility must so notify the Regional Administrator, if the guarantor is named as debtor in any such proceeding.

(6) In the event of commencement of a proceeding specified in paragraph (d)(5) of this section, an owner or operator who has furnished a financial statement for the purpose of demonstrating financial responsibility under this section shall be deemed to be in violation of this paragraph until an alternative financial assurance demonstration acceptable to the Regional Administrator is provided either by the owner or operator or by its trustee in bankruptcy, receiver, or other authorized party. All parties shall be prohibited from injecting into the well until such alternate financial assurance is provided.

(e) *Casing and cementing requirements*. For enhanced recovery and hydrocarbon storage wells:

(1) The owner or operator shall case and cement the well to prevent movement of fluids into or between underground sources of drinking water. In determining and specifying casing and

cementing requirements, the following factors shall be considered:

(i) Depth to the injection zone;

(ii) Depth to the bottom of all USDWs; and

(iii) Estimated maximum and average injection pressures.

(2) In addition, in determining and specifying casing and cementing requirements the Director may consider information on:

(i) Nature of formation fluids;

(ii) Lithology of injection and confining zones;

(iii) External pressure, internal pressure, and axial loading;

(iv) Hole size;

(v) Size and grade of all casing strings; and

(vi) Class of cement.

(3) The requirements in paragraphs (e) (1) and (2) of this section need not apply if:

(i) Regulatory controls for casing and cementing existed at the time of drilling of the well and the well is in compliance with those controls; and

(ii) Well injection will not result in the movement of fluids into an underground source of drinking water so as to create a significant risk to the health of persons.

(4) When a State did not have regulatory controls for casing and cementing prior to the time of the submission of the State program to the Administrator, the Director need not apply the casing and cementing requirements in paragraph (e)(1) of this section if he submits as a part of his application for primacy, an appropriate plan for casing and cementing of existing, newly converted, and newly drilled wells in existing fields, and the Administrator approves the plan.

(f) *Operating requirements.* (1) Injection between the outermost casing protecting underground sources of drinking water and the well bore is prohibited.

(2) The owner or operator of a Class I, II or III injection well authorized by rule shall establish and maintain mechanical integrity as defined in §146.8 of this chapter until the well is properly plugged in accordance with an approved plugging and abandonment plan pursuant to §§144.28(c) and 146.10, and a plugging and abandonment report pursuant to §144.28(k) is submitted, or until the well is converted in compliance with §144.28(j). For EPA-administered programs, the Regional Administrator may require by written notice that the owner or operator comply with a schedule describing when mechanical integrity demonstrations shall be made.

(3) When the Director determines that a Class I (non-hazardous), II or III injection well lacks mechanical integrity pursuant to §146.8 of this chapter, the Director shall give written notice of his determination to the owner or operator. Unless the Director requires immediate cessation, the owner or operator shall cease injection into the well within 48 hours of receipt of the Director's determination. The Director may allow plugging of the well in accordance with the requirements of §146.10 of this chapter, or require the owner or operator to perform such additional construction, operation, monitoring, reporting and corrective action as is necessary to prevent the movement of fluid into or between USDWs caused by the lack of mechanical integrity. The owner or operator may resume injection upon receipt of written notification from the Director that the owner or operator has demonstrated mechanical integrity pursuant to §146.8 of this chapter.

(4) The Director may allow the owner or operator of a well which lacks mechanical integrity pursuant to §146.8(a)(1) of this chapter to continue or resume injection if the owner or operator has made a satisfactory demonstration that there is no movement of fluid into or between USDWs.

(5) For Class I wells, unless an alternative to a packer has been approved under §146.12(c) of this chapter, the owner or operator shall fill the annulus between the tubing and the long string of casings with a fluid approved by the Director and maintain a pressure, also approved by the Director, on the annulus. For EPA administered programs, the owner or operator of a Class I well completed with tubing and packer shall fill the annulus between tubing and casing with a noncorrosive fluid and maintain a positive pressure on the annulus. For other Class I wells, the owner or operator shall insure that the

alternative completion method will reliably provide a comparable level of protection to underground sources of drinking water.

(6) Injection pressure.

(i) For Class I and III wells:

(A) Except during stimulation, the owner or operator shall not exceed an injection pressure at the wellhead which shall be calculated so as to assure that the pressure during injection does not initiate new fractures or propagate existing fractures in the injection zone; and

(B) The owner or operator shall not inject at a pressure which will initiate fractures in the confining zone or cause the movement of injection or formation fluids into an underground source of drinking water.

(ii) For Class II wells:

(A) The owner or operator shall not exceed a maximum injection pressure at the wellhead which shall be calculated so as to assure that the pressure during injection does not initiate new fractures of propagate existing fractures in the confining zone adjacent to the USDWs; and

(B) The owner or operator shall not inject at a pressure which will cause the movement of injection or formation fluids into an underground source of drinking water.

(g) *Monitoring requirements.* The owner or operator shall perform the monitoring as described in this paragraph. For EPA administered programs, monitoring of the nature of the injected fluids shall comply with applicable analytical methods cited and described in table I of 40 CFR 136.3 or in appendix III of 40 CFR part 261 or by other methods that have been approved by the Regional Administrator.

(1) The owner or operator of a Class I well shall:

(i) Analyze the nature of the injected fluids with sufficient frequency to yield data representative of their characteristics;

(ii) Install and use continuous recording devices to monitor injection pressure, flow rate and volume, and the pressure on the annulus between the tubing and the long string of casing;

(iii) Install and use monitoring wells within the area of review if required by the Director, to monitor any migration of fluids into and pressure in the underground sources of drinking water. The type, number and location of the wells, the parameters to be measured, and the frequency of monitoring must be approved by the Director.

(2) For Class II wells:

(i) The owner or operator shall monitor the nature of the injected fluids with sufficient frequency to yield data representative of their characteristics. For EPA administered programs, this frequency shall be at least once within the first year of the authorization and thereafter when changes are made to the fluid.

(ii) The owner or operator shall observe the injection pressure, flow rate, and cumulative volume at least with the following frequencies:

(A) Weekly for produced fluid disposal operations;

(B) Monthly for enhanced recovery operations;

(C) Daily during the injection of liquid hydrocarbons and injection for withdrawal of stored hydrocarbons; and

(D) Daily during the injection phase of cyclic steam operations.

(iii) The owner or operator shall record one observation of injection pressure, flow rate and cumulative volume at reasonable intervals no greater than thirty days.

(iv) For enhanced recovery and hydrocarbon storage wells:

(A) The owner or operator shall demonstrate mechanical integrity pursuant to §146.8 of this chapter at least once every five years during the life of the injection well.

(B) For EPA administered programs, the Regional Administrator by written notice may require the owner or operator to comply with a schedule describing when such demonstrations shall be made.

(C) For EPA administered programs, the owner or operator of any well required to be tested for mechanical integrity shall notify the Regional Administrator at least 30 days prior to any required mechanical integrity test. The Regional Administrator may allow a shorter notification period if it would be sufficient to enable EPA to witness the mechanical integrity testing if it chose. Notification may be in the form of a yearly or quarterly schedule of

planned mechanical integrity tests, or it may be on an individual basis.

(v) The owner or operator of a hydrocarbon storage or enhanced recovery wells may monitor them by manifold monitoring on a field or project basis rather than on an individual well basis if such facilities consist of more than one injection well, operate with a common manifold, and provided the owner or operator demonstrates to the Director that manifold monitoring is comparable to individual well monitoring.

(3)(i) For Class III wells the owner or operator shall provide to the Director a qualitative analysis and ranges in concentrations of all constituents of injected fluids at least once within the first year of authorization and thereafter whenever the injection fluid is modified to the extent that the initial data are incorrect or incomplete. The owner or operator may request Federal confidentiality as specified in 40 CFR part 2. If the information is proprietary the owner or operator may in lieu of the ranges in concentrations choose to submit maximum concentrations which shall not be exceeded. In such a case the owner or operator shall retain records of the undisclosed concentrations and provide them upon request to the Regional Administrator as part of any enforcement investigation; and

(ii) Monitor injection pressure and either flow rate or volume semi-monthly, or meter and record daily injected and produced fluid volumes as appropriate;

(iii) Monitor the fluid level in the injection zone semi-monthly, where appropriate;

(iv) All Class III wells may be monitored on a field or project basis rather than an individual well basis by manifold monitoring. Manifold monitoring may be used in cases of facilities consisting of more than one injection well, operating with a common manifold. Separate monitoring systems for each well are not required provided the owner or operator demonstrates to the Director that manifold monitoring is comparable to individual well monitoring.

(h) *Reporting requirements*. The owner or operator shall submit reports to the Director as follows:

(1) For Class I wells, quarterly reports on:

(i) The physical, chemical, and other relevant characteristics of the injection fluids;

(ii) Monthly average, maximum, and minimum values for injection pressure, flow rate and volume, and annular pressure;

(iii) The results from ground-water monitoring wells prescribed in paragraph (g)(1)(iii) of this section;

(iv) The results of any test of the injection well conducted by the owner or operator during the reported quarter if required by the Director; and

(v) Any well work over performed during the reported quarter.

(2) For Class II wells:

(i) An annual report to the Director summarizing the results of all monitoring, as required in paragraph (g)(2) of this section. Such summary shall include monthly records of injected fluids, and any major changes in characteristics or sources of injected fluids. Previously submitted information may be included by reference.

(ii) The owner or operator of hydrocarbon storage and enhanced recovery projects may report on a field or project basis rather than on an individual well basis where manifold monitoring is used.

(3) For Class III wells:

(i) Quarterly reporting on all monitoring, as required in paragraph (g)(3) of this section;

(ii) Quarterly reporting of the results of any periodic tests required by the Director that are performed during the reported quarter;

(iii) Monitoring may be reported on a project or field basis rather than an individual well basis where manifold monitoring is used.

(i) *Retention of records*. The owner or operator shall retain records of all monitoring information, including the following:

(1) Calibration and maintenance records and all original strip chart recordings for continuous monitoring instrumentation, and copies of all reports required by this section, for a period of at least three years from the date of the sample, measurement, or report. This period may be extended by request of the Director at any time; and

(2) The nature and composition of all injected fluids until three years after the completion of any plugging and abandonment procedures specified under §144.52(l)(6). The Director may require the owner or operator to deliver the records to the Director at the conclusion of the retention period. For EPA administered programs, the owner or operator shall continue to retain the records after the three year retention period unless he delivers the records to the Regional Administrator or obtains written approval from the Regional Administrator to discard the records.

(j) *Notice of abandonment.* (1) The owner or operator shall notify the Director, according to a time period required by the Director, before conversion or abandonment of the well.

(2) For EPA-administered programs, the owner or operator shall notify the Regional Administrator at least 45 days before plugging and abandonment. The Regional Administrator, at his discretion, may allow a shorter notice period.

(k) *Plugging and abandonment report.* For EPA-administered programs, within 60 days after plugging a well or at the time of the next quarterly report (whichever is less) the owner or operator shall submit a report to the Regional Administrator. If the quarterly report is due less than 15 days before completion of plugging, then the report shall be submitted within 60 days. The report shall be certified as accurate by the person who performed the plugging operation. Such report shall consist of either:

(1) A statement that the well was plugged in accordance with the plan previously submitted to the Regional Administrator; or

(2) Where actual plugging differed from the plan previously submitted, an updated version of the plan, on the form supplied by the Regional Administrator, specifying the different procedures used.

(l) *Change of ownership or operational control.* For EPA-administered programs:

(1) The transferor of a Class I, II or III well authorized by rule shall notify the Regional Administrator of a transfer of ownership or operational control of the well at least 30 days in advance of the proposed transfer.

(2) The notice shall include a written agreement between the transferor and the transferee containing a specific date for transfer of ownership or operational control of the well; and a specific date when the financial responsibility demonstration of §144.28(d) will be met by the transferee.

(3) The transferee is authorized to inject unless he receives notification from the Director that the transferee has not demonstrated financial responsibility pursuant to §144.28(d).

(m) *Requirements for Class I hazardous waste wells.* The owner or operator of any Class I well injecting hazardous waste shall comply with §144.14(c). In addition, for EPA-administered programs the owner or operator shall properly dispose of, or decontaminate by removing all hazardous waste residues, all injection well equipment.

[49 FR 20182, May 11, 1984, as amended at 58 FR 63897, Dec. 3, 1993]

Subpart D—Authorization by Permit

§144.31 Application for a permit; authorization by permit.

(a) *Permit application.* Unless an underground injection well is authorized by rule under subpart C of this part, all injection activities including construction of an injection well are prohibited until the owner or operator is authorized by permit. An owner or operator of a well currently authorized by rule must apply for a permit under this section unless well authorization by rule was for the life of the well or project. Authorization by rule for a well or project for which a permit application has been submitted terminates for the well or project upon the effective date of the permit. Procedures for applications, issuance and administration of emergency permits are found exclusively in §144.34. A RCRA permit applying the standards of part 264, subpart C of this chapter will constitute a UIC permit for hazardous waste injection wells for which the technical standards in part 146 of this chapter are not generally appropriate.

(b) *Who applies?* When a facility or activity is owned by one person but is operated by another person, it is the operator's duty to obtain a permit.

(c) *Time to apply.* Any person who performs or proposes an underground injection for which a permit is or will be required shall submit an application to the Director in accordance with the UIC program as follows:

(1) For existing wells, as expeditiously as practicable and in accordance with the schedule in any program description under § 145.23(f) or (for EPA administered programs) on a schedule established by the Regional Administrator, but no later than 4 years from the approval or promulgation of the UIC program, or as required under § 144.14(b) for wells injecting hazardous waste. For EPA administered programs the owner or operator of Class I or III wells shall submit a complete permit application no later than 1 year after the effective date of the program.

(2) For new injection wells, except new wells in projects authorized under § 144.21(d) or authorized by an existing area permit under § 144.33(c), a reasonable time before construction is expected to begin.

(d) *Completeness.* The Director shall not issue a permit before receiving a complete application for a permit except for emergency permits. An application for a permit is complete when the Director receives an application form and any supplemental information which are completed to his or her satisfaction. The completeness of any application for a permit shall be judged independently of the status of any other permit application or permit for the same facility or activity. For EPA-administered programs, an application which is reviewed under § 124.3 is complete when the Director receives either a complete application or the information listed in a notice of deficiency.

(e) *Information requirements.* All applicants for Class I, II, III, and V permits shall provide the following information to the Director, using the application form provided by the Director. Applicants for Class VI permits shall follow the criteria provided in § 146.82 of this chapter.

(1) The activities conducted by the applicant which require it to obtain permits under RCRA, UIC, the National Pollution Discharge Elimination system (NPDES) program under the Clean Water Act, or the Prevention of Significant Deterioration (PSD) program under the Clean Air Act.

(2) Name, mailing address, and location of the facility for which the application is submitted.

(3) Up to four SIC codes which best reflect the principal products or services provided by the facility.

(4) The operator's name, address, telephone number, ownership status, and status as Federal, State, private, public, or other entity.

(5) Whether the facility is located on Indian lands.

(6) A listing of all permits or construction approvals received or applied for under any of the following programs:

(i) Hazardous Waste Management program under RCRA.

(ii) UIC program under SDWA.

(iii) NPDES program under CWA.

(iv) Prevention of Significant Deterioration (PSD) program under the Clean Air Act.

(v) Nonattainment program under the Clean Air Act.

(vi) National Emission Standards for Hazardous Pollutants (NESHAPS) preconstruction approval under the Clean Air Act.

(vii) Ocean dumping permits under the Marine Protection Research and Sanctuaries Act.

(viii) Dredge and fill permits under section 404 of CWA.

(ix) Other relevant environmental permits, including State permits.

(7) A topographic map (or other map if a topographic map is unavailable) extending one mile beyond the property boundaries of the source depicting the facility and each of its intake and discharge structures; each of its hazardous waste treatment, storage, or disposal facilities; each well where fluids from the facility are injected underground; and those wells, springs, and other surface water bodies, and drinking water wells listed in public records or otherwise known to the applicant within a quarter mile of the facility property boundary.

(8) A brief description of the nature of the business.

(9) For EPA-administered programs, the applicant shall identify and submit on a list with the permit application the names and addresses of all owners of record of land within one-quarter mile of the facility boundary. This requirement may be waived by the Regional Administrator where the site is located in a populous area and the Regional Administrator determines that the requirement would be impracticable.

(10) A plugging and abandonment plan that meets the requirements of § 146.10 of this chapter and is acceptable to the Director.

(f) *Recordkeeping*. Applicants shall keep records of all data used to complete permit applications and any supplemental information submitted under § 144.31 for a period of at least 3 years from the date the application is signed.

(g) *Information Requirements for Class I Hazardous Waste Injection Wells Permits*. (1) The following information is required for each active Class I hazardous waste injection well at a facility seeking a UIC permit:

(i) Dates well was operated.

(ii) Specification of all wastes which have been injected in the well, if available.

(2) The owner or operator of any facility containing one or more active hazardous waste injection wells must submit all available information pertaining to any release of hazardous waste or constituents from any active hazardous waste injection well at the facility.

(3) The owner or operator of any facility containing one or more active Class I hazardous waste injection wells must conduct such preliminary site investigations as are necessary to determine whether a release is occurring, has occurred, or is likely to have occurred.

[48 FR 14189, Apr. 1, 1983, as amended at 49 FR 20185, May 11, 1984; 52 FR 45797, Dec. 1, 1987; 52 FR 46963, Dec. 10, 1987; 58 FR 63897, Dec. 3, 1993; 75 FR 77288, Dec. 10, 2010]

§ 144.32 Signatories to permit applications and reports.

(a) *Applications*. All permit applications, except those submitted for Class II wells (see paragraph (b) of this section), shall be signed as follows:

(1) *For a corporation:* by a responsible corporate officer. For the purpose of this section, a responsible corporate officer means; (i) A president, secretary, treasurer, or vice president of the corporation in charge of a principal business function, or any other person who performs similar policy- or decision-making functions for the corporation, or (ii) the manager of one or more manufacturing, production, or operating facilities employing more than 250 persons or having gross annual sales or expenditures exceeding $25 million (in second-quarter 1980 dollars), if authority to sign documents has been assigned or delegated to the manager in accordance with corporate procedures.

NOTE: EPA does not require specific assignments or delegations of authority to responsible corporate officers identified in § 144.32(a)(1)(i). The Agency will presume that these responsible corporate officers have the requisite authority to sign permit applications unless the corporation has notified the Director to the contrary. Corporate procedures governing authority to sign permit applications may provide for assignment or delegation to applicable corporate positions under § 144.32(a)(1)(ii) rather than to specific individuals.

(2) *For a partnership or sole proprietorship:* by a general partner or the proprietor, respectively; or

(3) *For a municipality, State, Federal, or other public agency:* by either a principal executive officer or ranking elected official. For purposes of this section, a principal executive officer of a Federal agency includes: (i) The chief executive officer of the agency, or (ii) a senior executive officer having responsibility for the overall operations of a principal geographic unit of the agency (e.g., Regional Administrators of EPA).

(b) *Reports*. All reports required by permits, other information requested by the Director, and all permit applications submitted for Class II wells under § 144.31 shall be signed by a person described in paragraph (a) of this section, or by a duly authorized representative of that person. A person is a duly authorized representative only if:

(1) The authorization is made in writing by a person described in paragraph (a) of this section;

(2) The authorization specifies either an individual or a position having responsibility for the overall operation of the regulated facility or activity, such as the position of plant manager, operator of a well or a well field, superintendent, or position of equivalent responsibility. (A duly authorized representative may thus be either a named individual or any individual occupying a named position); and

(3) The written authorization is submitted to the Director.

(c) *Changes to authorization*. If an authorization under paragraph (b) of this section is no longer accurate because a different individual or position has responsibility for the overall operation of the facility, a new authorization satisfying the requirements of paragraph (b) of this section must be submitted to the Director prior to or together with any reports, information, or applications to be signed by an authorized representative.

(d) *Certification*. Any person signing a document under paragraph (a) or (b) of this section shall make the following certification:

I certify under penalty of law that this document and all attachments were prepared under my direction or supervision in accordance with a system designed to assure that qualified personnel properly gather and evaluate the information submitted. Based on my inquiry of the person or persons who manage the system, or those persons directly responsible for gathering the information, the information submitted is, to the best of my knowledge and belief, true, accurate, and complete. I am aware that there are significant penalties for submitting false information, including the possibility of fine and imprisonment for knowing violations.

(Clean Water Act (33 U.S.C. 1251 *et seq.*), Safe Drinking Water Act (42 U.S.C. 300f *et seq.*), Clean Air Act (42 U.S.C. 7401 *et seq.*), Resource Conservation and Recovery Act (42 U.S.C. 6901 *et seq.*)

[48 FR 14189, Apr. 1, 1983, as amended at 48 FR 39621, Sept. 1, 1983]

§ 144.33 Area permits.

(a) The Director may issue a permit on an area basis, rather than for each well individually, provided that the permit is for injection wells:

(1) Described and identified by location in permit application(s) if they are existing wells, except that the Director may accept a single description of wells with substantially the same characteristics;

(2) Within the same well field, facility site, reservoir, project, or similar unit in the same State;

(3) Operated by a single owner or operator; and

(4) Used to inject other than hazardous waste; and

(5) Other than Class VI wells.

(b) Area permits shall specify:

(1) The area within which underground injections are authorized, and

(2) The requirements for construction, monitoring, reporting, operation, and abandonment, for all wells authorized by the permit.

(c) The area permit may authorize the permittee to construct and operate, convert, or plug and abandon wells within the permit area provided:

(1) The permittee notifies the Director at such time as the permit requires;

(2) The additional well satisfies the criteria in paragraph (a) of this section and meets the requirements specified in the permit under paragraph (b) of this section; and

(3) The cumulative effects of drilling and operation of additional injection wells are considered by the Director during evaluation of the area permit application and are acceptable to the Director.

(d) If the Director determines that any well constructed pursuant to paragraph (c) of this section does not satisfy any of the requirements of paragraphs (c) (1) and (2) of this section the Director may modify the permit under § 144.39, terminate under § 144.40, or take enforcement action. If the Director determines that cumulative effects are unacceptable, the permit may be modified under § 144.39.

[48 FR 14189, Apr. 1, 1983, as amended at 75 FR 77288, Dec. 10, 2010]

§ 144.34 Emergency permits.

(a) *Coverage*. Notwithstanding any other provision of this part or part 124, the Director may temporarily permit a specific underground injection if:

(1) An imminent and substantial endangerment to the health of persons will result unless a temporary emergency permit is granted; or

(2) A substantial and irretrievable loss of oil or gas resources will occur unless a temporary emergency permit is granted to a Class II well; and

(i) Timely application for a permit could not practicably have been made; and

(ii) The injection will not result in the movement of fluids into underground sources of drinking water; or

(3) A substantial delay in production of oil or gas resources will occur unless a temporary emergency permit is granted to a new Class II well and the temporary authorization will not result in the movement of fluids into an underground source of drinking water.

(b) *Requirements for issuance.* (1) Any temporary permit under paragraph (a)(1) of this section shall be for no longer term than required to prevent the hazard.

(2) Any temporary permit under paragraph (a)(2) of this section shall be for no longer than 90 days, except that if a permit application has been submitted prior to the expiration of the 90-day period, the Director may extend the temporary permit until final action on the application.

(3) Any temporary permit under paragraph (a)(3) of this section shall be issued only after a complete permit application has been submitted and shall be effective until final action on the application.

(4) Notice of any temporary permit under this paragraph shall be published in accordance with § 124.11 within 10 days of the issuance of the permit.

(5) The temporary permit under this section may be either oral or written. If oral, it must be followed within 5 calendar days by a written temporary emergency permit.

(6) The Director shall condition the temporary permit in any manner he or she determines is necessary to ensure that the injection will not result in the movement of fluids into an underground source of drinking water.

[48 FR 14189, Apr. 1, 1983, as amended at 49 FR 20185, May 11, 1984]

§ 144.35 Effect of a permit.

(a) Except for Class II and III wells, compliance with a permit during its term constitutes compliance, for purposes of enforcement, with Part C of the SDWA. However, a permit may be modified, revoked and reissued, or terminated during its term for cause as set forth in §§ 144.39 and 144.40.

(b) The issuance of a permit does not convey any property rights of any sort, or any exclusive privilege.

(c) The issuance of a permit does not authorize any injury to persons or property or invasion of other private rights, or any infringement of State or local law or regulations.

§ 144.36 Duration of permits.

(a) Permits for Class I and V wells shall be effective for a fixed term not to exceed 10 years. UIC permits for Class II and III wells shall be issued for a period up to the operating life of the facility. UIC permits for Class VI wells shall be issued for the operating life of the facility and the post-injection site care period. The Director shall review each issued Class II, III, and VI well UIC permit at least once every 5 years to determine whether it should be modified, revoked and reissued, terminated or a minor modification made as provided in § 144.39, § 144.40, or § 144.41.

(b) Except as provided in § 144.37, the term of a permit shall not be extended by modification beyond the maximum duration specified in this section.

(c) The Director may issue any permit for a duration that is less than the full allowable term under this section.

[48 FR 14189, Apr. 1, 1983, as amended at 75 FR 77288, Dec. 10, 2010]

§ 144.37 Continuation of expiring permits.

(a) *EPA permits.* When EPA is the permit-issuing authority, the conditions of an expired permit continue in force under 5 U.S.C. 558(c) until the effective date of a new permit if:

(1) The permittee has submitted a timely application which is a complete application for a new permit; and

(2) The Regional Administrator, through no fault of the permittee does not issue a new permit with an effective date on or before the expiration date of the previous permit (for example, when issuance is impracticable due to time or resource constraints).

(b) *Effect.* Permits continued under this section remain fully effective and enforceable.

(c) *Enforcement*. When the permittee is not in compliance with the conditions of the expiring or expired permit the Regional Administrator may choose to do any or all of the following:

(1) Initiate enforcement action based upon the permit which has been continued;

(2) Issue a notice of intent to deny the new permit. If the permit is denied, the owner or operator would then be required to cease the activities authorized by the continued permit or be subject to enforcement action for operating without a permit;

(3) Issue a new permit under part 124 with appropriate conditions; or

(4) Take other actions authorized by these regulations.

(d) *State continuation*. An EPA issued permit does not continue in force beyond its time expiration date under Federal law if at that time a State is the permitting authority. A State authorized to administer the UIC program may continue either EPA or State-issued permits until the effective date of the new permits, if State law allows. Otherwise, the facility or activity is operating without a permit from the time of expiration of the old permit to the effective date of the State-issued new permit.

§ 144.38 Transfer of permits.

(a) *Transfers by modification*. Except as provided in paragraph (b) of this section, a permit may be transferred by the permittee to a new owner or operator only if the permit has been modified or revoked and reissued (under § 144.39(b)(2)), or a minor modification made (under § 144.41(d)), to identify the new permittee and incorporate such other requirements as may be necessary under the Safe Drinking Water Act.

(b) *Automatic transfers*. As an alternative to transfers under paragraph (a) of this section, any UIC permit for a well not injecting hazardous waste or injecting carbon dioxide for geologic sequestration may be automatically transferred to a new permittee if:

(1) The current permittee notifies the Director at least 30 days in advance of the proposed transfer date referred to in paragraph (b)(2) of this section;

(2) The notice includes a written agreement between the existing and new permittees containing a specific date for transfer or permit responsibility, coverage, and liability between them, and the notice demonstrates that the financial responsibility requirements of § 144.52(a)(7) will be met by the new permittee; and

(3) The Director does not notify the existing permittee and the proposed new permittee of his or her intent to modify or revoke and reissue the permit. A modification under this paragraph may also be a minor modification under § 144.41. If this notice is not received, the transfer is effective on the date specified in the agreement mentioned in paragraph (b)(2) of this section.

[48 FR 14189, Apr. 1, 1983, as amended at 75 FR 77288, Dec. 10, 2010]

§ 144.39 Modification or revocation and reissuance of permits.

When the Director receives any information (for example, inspects the facility, receives information submitted by the permittee as required in the permit (see § 144.51 of this chapter), receives a request for modification or revocation and reissuance under § 124.5, or conducts a review of the permit file) he or she may determine whether or not one or more of the causes listed in paragraphs (a) and (b) of this section for modification or revocation and reissuance or both exist. If cause exists, the Director may modify or revoke and reissue the permit accordingly, subject to the limitations of paragraph (c) of this section, and may request an updated application if necessary. When a permit is modified, only the conditions subject to modification are reopened. If a permit is revoked and reissued, the entire permit is reopened and subject to revision and the permit is reissued for a new term. See § 124.5(c)(2) of this chapter. If cause does not exist under this section or § 144.41 of this chapter, the Director shall not modify or revoke and reissue the permit. If a permit modification satisfies the criteria in § 144.41 for ''minor modifications'' the permit may be modified without a draft permit or

public review. Otherwise, a draft permit must be prepared and other procedures in part 124 must be followed.

(a) *Causes for modification.* The following are causes for modification. For Class I hazardous waste injection wells, Class II, Class III or Class VI wells the following may be causes for revocation and reissuance as well as modification; and for all other wells the following may be cause for revocation or reissuance as well as modification when the permittee requests or agrees.

(1) *Alterations.* There are material and substantial alterations or additions to the permitted facility or activity which occurred after permit issuance which justify the application of permit conditions that are different or absent in the existing permit.

(2) *Information.* The Director has received information. Permits other than for Class II and III wells may be modified during their terms for this cause only if the information was not available at the time of permit issuance (other than revised regulations, guidance, or test methods) and would have justified the application of different permit conditions at the time of issuance. For UIC area permits (§ 144.33), this cause shall include any information indicating that cumulative effects on the environment are unacceptable.

(3) *New regulations.* The standards or regulations on which the permit was based have been changed by promulgation of new or amended standards or regulations or by judicial decision after the permit was issued. Permits other than for Class I hazardous waste injection wells, Class II, Class III or Class VI wells may be modified during their permit terms for this cause only as follows:

(i) For promulgation of amended standards or regulations, when:

(A) The permit condition requested to be modified was based on a promulgated part 146 regulation; and

(B) EPA has revised, withdrawn, or modified that portion of the regulation on which the permit condition was based, and

(C) A permittee requests modification in accordance with § 124.5 within ninety (90) days after FEDERAL REGISTER notice of the action on which the request is based.

(ii) For judicial decisions, a court of competent jurisdiction has remanded and stayed EPA promulgated regulations if the remand and stay concern that portion of the regulations on which the permit condition was based and a request is filed by the permittee in accordance with § 124.5 within ninety (90) days of judicial remand.

(4) *Compliance schedules.* The Director determines good cause exists for modification of a compliance schedule, such as an act of God, strike, flood, or materials shortage or other events over which the permittee has little or no control and for which there is no reasonably available remedy. See also § 144.41(c) (minor modifications).

(5) *Basis for modification of Class VI permits.* Additionally, for Class VI wells, whenever the Director determines that permit changes are necessary based on:

(i) Area of review reevaluations under § 146.84(e)(1) of this chapter;

(ii) Any amendments to the testing and monitoring plan under § 146.90(j) of this chapter;

(iii) Any amendments to the injection well plugging plan under § 146.92(c) of this chapter;

(iv) Any amendments to the post-injection site care and site closure plan under § 146.93(a)(3) of this chapter;

(v) Any amendments to the emergency and remedial response plan under § 146.94(d) of this chapter; or

(vi) A review of monitoring and/or testing results conducted in accordance with permit requirements.

(b) *Causes for modification or revocation and reissuance.* The following are causes to modify or, alternatively, revoke and reissue a permit:

(1) Cause exists for termination under § 144.40, and the Director determines that modification or revocation and reissuance is appropriate.

(2) The Director has received notification (as required in the permit, see § 144.41(d)) of a proposed transfer of the permit. A permit also may be modified to reflect a transfer after the effective date of an automatic transfer (§ 144.38(b)) but will not be revoked and reissued after the effective date of the

transfer except upon the request of the new permittee.

(3) A determination that the waste being injected is a hazardous waste as defined in § 261.3 either because the definition has been revised, or because a previous determination has been changed.

(c) *Facility siting*. Suitability of the facility location will not be considered at the time of permit modification or revocation and reissuance unless new information or standards indicate that a threat to human health or the environment exists which was unknown at the time of permit issuance.

[48 FR 14189, Apr. 1, 1983, as amended at 53 FR 28147, July 26, 1988; 75 FR 77288, Dec. 10, 2010]

§ 144.40 Termination of permits.

(a) The Director may terminate a permit during its term, or deny a permit renewal application for the following causes:

(1) Noncompliance by the permittee with any condition of the permit;

(2) The permittee's failure in the application or during the permit issuance process to disclose fully all relevant facts, or the permittee's misrepresentation of any relevant facts at any time; or

(3) A determination that the permitted activity endangers human health or the environment and can only be regulated to acceptable levels by permit modification or termination;

(b) The Director shall follow the applicable procedures in part 124 in terminating any permit under this section.

§ 144.41 Minor modifications of permits.

Upon the consent of the permittee, the Director may modify a permit to make the corrections or allowances for changes in the permitted activity listed in this section, without following the procedures of part 124. Any permit modification not processed as a minor modification under this section must be made for cause and with part 124 draft permit and public notice as required in § 144.39. Minor modifications may only:

(a) Correct typographical errors;

(b) Require more frequent monitoring or reporting by the permittee;

(c) Change an interim compliance date in a schedule of compliance, provided the new date is not more than 120 days after the date specified in the existing permit and does not interfere with attainment of the final compliance date requirement; or

(d) Allow for a change in ownership or operational control of a facility where the Director determines that no other change in the permit is necessary, provided that a written agreement containing a specific date for transfer of permit responsibility, coverage, and liability between the current and new permittees has been submitted to the Director.

(e) Change quantities or types of fluids injected which are within the capacity of the facility as permitted and, in the judgment of the Director, would not interfere with the operation of the facility or its ability to meet conditions described in the permit and would not change its classification.

(f) Change construction requirements approved by the Director pursuant to § 144.52(a)(1) (establishing UIC permit conditions), provided that any such alteration shall comply with the requirements of this part and part 146.

(g) Amend a plugging and abandonment plan which has been updated under § 144.52(a)(6).

(h) Amend a Class VI injection well testing and monitoring plan, plugging plan, post-injection site care and site closure plan, or emergency and remedial response plan where the modifications merely clarify or correct the plan, as determined by the Director.

[48 FR 14189, Apr. 1, 1983, as amended at 75 FR 77289, Dec. 10, 2010]

Subpart E—Permit Conditions

§ 144.51 Conditions applicable to all permits.

The following conditions apply to all UIC permits. All conditions applicable to all permits shall be incorporated into the permits either expressly or by reference. If incorporated by reference, a specific citation to these regulations (or the corresponding approved State regulations) must be given in the permit.

(a) *Duty to comply*. The permittee must comply with all conditions of this permit. Any permit noncompliance constitutes a violation of the Safe Drinking Water Act and is grounds for enforcement action; for permit termination, revocation and reissuance, or modification; or for denial of a permit renewal application; except that the permittee need not comply with the provisions of this permit to the extent and for the duration such noncompliance is authorized in an emergency permit under § 144.34.

(b) *Duty to reapply*. If the permittee wishes to continue an activity regulated by this permit after the expiration date of this permit, the permittee must apply for and obtain a new permit.

(c) *Need to halt or reduce activity not a defense*. It shall not be a defense for a permittee in an enforcement action that it would have been necessary to halt or reduce the permitted activity in order to maintain compliance with the conditions of this permit.

(d) *Duty to mitigate*. The permittee shall take all reasonable steps to minimize or correct any adverse impact on the environment resulting from noncompliance with this permit.

(e) *Proper operation and maintenance*. The permittee shall at all times properly operate and maintain all facilities and systems of treatment and control (and related appurtenances) which are installed or used by the permittee to achieve compliance with the conditions of this permit. Proper operation and maintenance includes effective performance, adequate funding, adequate operator staffing and training, and adequate laboratory and process controls, including appropriate quality assurance procedures. This provision requires the operation of back-up or auxiliary facilities or similar systems only when necessary to achieve compliance with the conditions of the permit.

(f) *Permit actions*. This permit may be modified, revoked and reissued, or terminated for cause. The filing of a request by the permittee for a permit modification, revocation and reissuance, or termination, or a notification of planned changes or anticipated noncompliance, does not stay any permit condition.

(g) *Property rights*. This permit does not convey any property rights of any sort, or any exclusive privilege.

(h) *Duty to provide information*. The permittee shall furnish to the Director, within a time specified, any information which the Director may request to determine whether cause exists for modifying, revoking and reissuing, or terminating this permit, or to determine compliance with this permit. The permittee shall also furnish to the Director, upon request, copies of records required to be kept by this permit.

(i) *Inspection and entry*. The permittee shall allow the Director, or an authorized representative, upon the presentation of credentials and other documents as may be required by law, to:

(1) Enter upon the permittee's premises where a regulated facility or activity is located or conducted, or where records must be kept under the conditions of this permit;

(2) Have access to and copy, at reasonable times, any records that must be kept under the conditions of this permit;

(3) Inspect at reasonable times any facilities, equipment (including monitoring and control equipment), practices, or operations regulated or required under this permit; and

(4) Sample or monitor at reasonable times, for the purposes of assuring permit compliance or as otherwise authorized by the SDWA, any substances or parameters at any location.

(j) *Monitoring and records*. (1) Samples and measurements taken for the purpose of monitoring shall be representative of the monitored activity.

(2) The permittee shall retain records of all monitoring information, including the following:

(i) Calibration and maintenance records and all original strip chart recordings for continuous monitoring instrumentation, copies of all reports required by this permit, and records of all data used to complete the application for this permit, for a period of at least 3 years from the date of the sample, measurement, report, or application. This period may be extended by request of the Director at any time; and

(ii) The nature and composition of all injected fluids until three years after the completion of any plugging and abandonment procedures specified under §144.52(a)(6), or under part 146 subpart G as appropriate. The Director may require the owner or operator to deliver the records to the Director at the conclusion of the retention period. For EPA administered programs, the owner or operator shall continue to retain the records after the three year retention period unless he delivers the records to the Regional Administrator or obtains written approval from the Regional Administrator to discard the records.

(3) Records of monitoring information shall include:

(i) The date, exact place, and time of sampling or measurements;

(ii) The individual(s) who performed the sampling or measurements;

(iii) The date(s) analyses were performed;

(iv) The individual(s) who performed the analyses;

(v) The analytical techniques or methods used; and

(vi) The results of such analyses.

(4) Owners or operators of Class VI wells shall retain records as specified in subpart H of part 146, including §§146.84(g), 146.91(f), 146.92(d), 146.93(f), and 146.93(h) of this chapter.

(k) *Signatory requirement*. All applications, reports, or information submitted to the Administrator shall be signed and certified. (See §144.32.)

(l) *Reporting requirements*—(1) *Planned changes*. The permittee shall give notice to the Director as soon as possible of any planned physical alterations or additions to the permitted facility.

(2) *Anticipated noncompliance*. The permittee shall give advance notice to the Director of any planned changes in the permitted facility or activity which may result in noncompliance with permit requirements.

(3) *Transfers*. This permit is not transferable to any person except after notice to the Director. The Director may require modification or revocation and reissuance of the permit to change the name of the permittee and incorporate such other requirements as may be necessary under the Safe Drinking Water Act. (See §144.38; in some cases, modification or revocation and reissuance is mandatory.)

(4) *Monitoring reports*. Monitoring results shall be reported at the intervals specified elsewhere in this permit.

(5) *Compliance schedules*. Reports of compliance or noncompliance with, or any progress reports on, interim and final requirements contained in any compliance schedule of this permit shall be submitted no later than 30 days following each schedule date.

(6) *Twenty-four hour reporting*. The permittee shall report any noncompliance which may endanger health or the environment, including:

(i) Any monitoring or other information which indicates that any contaminant may cause an endangerment to a USDW; or

(ii) Any noncompliance with a permit condition or malfunction of the injection system which may cause fluid migration into or between USDWs.

Any information shall be provided orally within 24 hours from the time the permittee becomes aware of the circumstances. A written submission shall also be provided within 5 days of the time the permittee becomes aware of the circumstances. The written submission shall contain a description of the noncompliance and its cause, the period of noncompliance, including exact dates and times, and if the noncompliance has not been corrected, the anticipated time it is expected to continue; and steps taken or planned to reduce, eliminate, and prevent reoccurrence of the noncompliance.

(7) *Other noncompliance*. The permittee shall report all instances of noncompliance not reported under paragraphs (l) (4), (5), and (6) of this section, at the time monitoring reports are submitted. The reports shall contain the information listed in paragraph (l)(6) of this section.

(8) *Other information*. Where the permittee becomes aware that it failed to submit any relevant facts in a permit application, or submitted incorrect information in a permit application or in any report to the Director, it shall promptly submit such facts or information.

(m) *Requirements prior to commencing injection*. Except for all new wells authorized by an area permit under

§ 144.33(c), a new injection well may not commence injection until construction is complete, and

(1) The permittee has submitted notice of completion of construction to the Director; and

(2)(i) The Director has inspected or otherwise reviewed the new injection well and finds it is in compliance with the conditions of the permit; or

(ii) The permittee has not received notice form the Director of his or her intent to inspect or otherwise review the new injection well within 13 days of the date of the notice in paragraph (m)(1) of this section, in which case prior inspection or review is waived and the permittee may commence injection. The Director shall include in his notice a reasonable time period in which he shall inspect the well.

(n) The permittee shall notify the Director at such times as the permit requires before conversion or abandonment of the well or in the case of area permits before closure of the project.

(o) A Class I, II or III permit shall include and a Class V permit may include conditions which meet the applicable requirements of § 146.10 of this chapter to ensure that plugging and abandonment of the well will not allow the movement of fluids into or between USDWs. Where the plan meets the requirements of § 146.10 of this chapter, the Director shall incorporate the plan into the permit as a permit condition. Where the Director's review of an application indicates that the permittee's plan is inadequate, the Director may require the applicant to revise the plan, prescribe conditions meeting the requirements of this paragraph, or deny the permit. A Class VI permit shall include conditions which meet the requirements set forth in § 146.92 of this chapter. Where the plan meets the requirements of § 146.92 of this chapter, the Director shall incorporate it into the permit as a permit condition. For purposes of this paragraph, temporary or intermittent cessation of injection operations is not abandonment.

(p) *Plugging and abandonment report.* For EPA-administered programs, within 60 days after plugging a well or at the time of the next quarterly report (whichever is less) the owner or operator shall submit a report to the Regional Administrator. If the quarterly report is due less than 15 days before completion of plugging, then the report shall be submitted within 60 days. The report shall be certified as accurate by the person who performed the plugging operation. Such report shall consist of either:

(1) A statement that the well was plugged in accordance with the plan previously submitted to the Regional Administrator; or

(2) Where actual plugging differed from the plan previously submitted, and updated version of the plan on the form supplied by the regional administrator, specifying the differences.

(q) *Duty to establish and maintain mechanical integrity.* (1) The owner or operator of a Class I, II, III or VI well permitted under this part shall establish mechanical integrity prior to commencing injection or on a schedule determined by the Director. Thereafter the owner or operator of Class I, II, and III wells must maintain mechanical integrity as defined in § 146.8 of this chapter and the owner or operator of Class VI wells must maintain mechanical integrity as defined in § 146.89 of this chapter. For EPA-administered programs, the Regional Administrator may require by written notice that the owner or operator comply with a schedule describing when mechanical integrity demonstrations shall be made.

(2) When the Director determines that a Class I, II, III or VI well lacks mechanical integrity pursuant to § 146.8 or § 146.89 of this chapter for Class VI of this chapter, he/she shall give written notice of his/her determination to the owner or operator. Unless the Director requires immediate cessation, the owner or operator shall cease injection into the well within 48 hours of receipt of the Director's determination. The Director may allow plugging of the well pursuant to the requirements of § 146.10 of this chapter or require the permittee to perform such additional construction, operation, monitoring, reporting and corrective action as is necessary to prevent the movement of fluid into or between USDWs caused by the lack of mechanical integrity. The owner or operator may resume injection upon written notification from the Director that the owner or operator

has demonstrated mechanical integrity pursuant to § 146.8 of this chapter.

(3) The Director may allow the owner or operator of a well which lacks mechanical integrity pursuant to § 146.8(a)(1) of this chapter to continue or resume injection, if the owner or operator has made a satisfactory demonstration that there is no movement of fluid into or between USDWs.

[48 FR 14189, Apr. 1, 1983, as amended at 49 FR 20185, May 11, 1984; 53 FR 28147, July 26, 1988; 58 FR 63898, Dec. 3, 1993; 75 FR 77289, Dec. 10, 2010]

§ 144.52 Establishing permit conditions.

(a) In addition to conditions required in § 144.51, the Director shall establish conditions, as required on a case-by-case basis under § 144.36 (duration of permits), § 144.53(a) (schedules of compliance), § 144.54 (monitoring), and for EPA permits only § 144.53(b) (alternate schedules of compliance), and § 144.4 (considerations under Federal law). Permits for owners or operators of hazardous waste injection wells shall include conditions meeting the requirements of § 144.14 (requirements for wells injecting hazardous waste), paragraphs (a)(7) and (a)(9) of this section, and subpart G of part 146. Permits for owners or operators of Class VI injection wells shall include conditions meeting the requirements of subpart H of part 146. Permits for other wells shall contain the following requirements, when applicable.

(1) *Construction requirements* as set forth in part 146. Existing wells shall achieve compliance with such requirements according to a compliance schedule established as a permit condition. The owner or operator of a proposed new injection well shall submit plans for testing, drilling, and construction as part of the permit application. Except as authorized by an area permit, no constuction may commence until a permit has been issued containing construction requirements (see § 144.11). New wells shall be in compliance with these requirements prior to commencing injection operations. Changes in construction plans during construction may be approved by the Administrator as minor modifications (§ 144.41). No such changes may be physically incorporated into construction of the well prior to approval of the modification by the Director.

(2) Corrective action as set forth in §§ 144.55, 146.7, and 146.84 of this chapter.

(3) *Operation requirements* as set forth in 40 CFR part 146; the permit shall establish any maximum injection volumes and/or pressures necessary to assure that fractures are not initiated in the confining zone, that injected fluids do not migrate into any underground source of drinking water, that formation fluids are not displaced into any underground source of drinking water, and to assure compliance with the part 146 operating requirements.

(4) *Requirements for wells managing hazardous waste*, as set forth in § 144.14.

(5) Monitoring and reporting requirements as set forth in 40 CFR part 146. The permittee shall be required to identify types of tests and methods used to generate the monitoring data. For EPA administered programs, monitoring of the nature of injected fluids shall comply with applicable analytical methods cited and described in table I of 40 CFR 136.3 or in appendix III of 40 CFR part 261 or in certain circumstances by other methods that have been approved by the Regional Administrator.

(6) After a cessation of operations of two years the owner or operator shall plug and abandon the well in accordance with the plan unless he:

(i) Provides notice to the Regional Administrator;

(ii) Describes actions or procedures, satisfactory to the Regional Administrator, that the owner or operator will take to ensure that the well will not endanger USDWs during the period of temporary abandonment. These actions and procedures shall include compliance with the technical requirements applicable to active injection wells unless waived by the Regional Administrator.

(7) *Financial responsibility*. (i) The permittee, including the transferor of a permit, is required to demonstrate and maintain financial responsibility and resources to close, plug, and abandon the underground injection operation in a manner prescribed by the Director until:

(A) The well has been plugged and abandoned in accordance with an approved plugging and abandonment plan pursuant to §§144.51(o), 146.10, and 146.92 of this chapter, and submitted a plugging and abandonment report pursuant to §144.51(p); or

(B) The well has been converted in compliance with the requirements of §144.51(n); or

(C) The transferor of a permit has received notice from the Director that the owner or operator receiving transfer of the permit, the new permittee, has demonstrated financial responsibility for the well.

(ii) The permittee shall show evidence of such financial responsibility to the Director by the submission of a surety bond, or other adequate assurance, such as a financial statement or other materials acceptable to the Director. For EPA administered programs, the Regional Administrator may on a periodic basis require the holder of a lifetime permit to submit an estimate of the resources needed to plug and abandon the well revised to reflect inflation of such costs, and a revised demonstration of financial responsibility, if necessary. The owner or operator of a well injecting hazardous waste must comply with the financial responsibility requirements of subpart F of this part. For Class VI wells, the permittee shall show evidence of such financial responsibility to the Director by the submission of a qualifying instrument (see §146.85(a) of this chapter), such as a financial statement or other materials acceptable to the Director. The owner or operator of a Class VI well must comply with the financial responsibility requirements set forth in §146.85 of this chapter.

(8) *Mechanical integrity*. A permit for any Class I, II, III or VI well or injection project which lacks mechanical integrity shall include, and for any Class V well may include, a condition prohibiting injection operations until the permittee shows to the satisfaction of the Director under §146.8, or §146.89 of this chapter for Class VI, that the well has mechanical integrity.

(9) *Additional conditions*. The Director shall impose on a case-by-case basis such additional conditions as are necessary to prevent the migration of fluids into underground sources of drinking water.

(b)(1) In addition to conditions required in all permits the Director shall establish conditions in permits as required on a case-by-case basis, to provide for and assure compliance with all applicable requirements of the SDWA and parts 144, 145, 146 and 124.

(2) For a State issued permit, an applicable requirement is a State statutory or regulatory requirement which takes effect prior to final administrative disposition of the permit. For a permit issued by EPA, an applicable requirement is a statutory or regulatory requirement (including any interim final regulation) which takes effect prior to the issuance of the permit. Section 124.14 (reopening of comment period) provides a means for reopening EPA permit proceedings at the discretion of the Director where new requirements become effective during the permitting process and are of sufficient magnitude to make additional proceedings desirable. For State and EPA administered programs, an applicable requirement is also any requirement which takes effect prior to the modification or revocation and reissuance of a permit, to the extent allowed in §144.39.

(3) New or reissued permits, and to the extent allowed under §144.39 modified or revoked and reissued permits, shall incorporate each of the applicable requirements referenced in §144.52.

(c) *Incorporation*. All permit conditions shall be incorporated either expressly or by reference. If incorporated by reference, a specific citation to the applicable regulations or requirements must be given in the permit.

[48 FR 14189, Apr. 1, 1983, as amended at 49 FR 20185, May 11, 1984; 53 FR 28147, July 26, 1988; 58 FR 63898; Dec. 3, 1993; 65 FR 30913, May 15, 2000; 75 FR 77289, Dec. 10, 2010]

§ 144.53 Schedule of compliance.

(a) *General*. The permit may, when appropriate, specify a schedule of compliance leading to compliance with the SDWA and parts 144, 145, 146, and 124.

(1) *Time for compliance*. Any schedules of compliance shall require compliance as soon as possible, and in no case later than 3 years after the effective date of the permit.

(2) *Interim dates*. Except as provided in paragraph (b)(1)(ii) of this section, if a permit establishes a schedule of compliance which exceeds 1 year from the date of permit issuance, the schedule shall set forth interim requirements and the dates for their achievement.

(i) The time between interim dates shall not exceed 1 year.

(ii) If the time necessary for completion of any interim requirement is more than 1 year and is not readily divisible into stages for completion, the permit shall specify interim dates for the submission of reports of progress toward completion of the interim requirements and indicate a projected completion date.

(3) *Reporting*. The permit shall be written to require that if paragraph (a)(1) of this section is applicable, progress reports be submitted no later than 30 days following each interim date and the final date of compliance.

(b) *Alternative schedules of compliance*. A permit applicant or permittee may cease conducting regulated activities (by plugging and abandonment) rather than continue to operate and meet permit requirements as follows:

(1) If the permittee decides to cease conducting regulated activities at a given time within the term of a permit which has already been issued:

(i) The permit may be modified to contain a new or additional schedule leading to timely cessation of activities; or

(ii) The permittee shall cease conducting permitted activities before noncompliance with any interim or final compliance schedule requirement already specified in the permit.

(2) If the decision to cease conducting regulated activities is made before issuance of a permit whose term will include the termination date, the permit shall contain a schedule leading to termination which will ensure timely compliance with applicable requirements.

(3) If the permittee is undecided whether to cease conducting regulated activities, the Director may issue or modify a permit to contain two schedules as follows:

(i) Both schedules shall contain an identical interim deadline requiring a final decision on whether to cease conducting regulated activities no later than a date which ensures sufficient time to comply with applicable requirements in a timely manner if the decision is to continue conducting regulated activities;

(ii) One schedule shall lead to timely compliance with applicable requirements;

(iii) The second schedule shall lead to cessation of regulated activities by a date which will ensure timely compliance with applicable requirements;

(iv) Each permit containing two schedules shall include a requirement that after the permittee has made a final decision under paragraph (b)(3)(i) of this section it shall follow the schedule leading to compliance if the decision is to continue conducting regulated activities, and follow the schedule leading to termination if the decision is to cease conducting regulated activities.

(4) The applicant's or permittee's decision to cease conducting regulated activities shall be evidenced by a firm public commitment satisfactory to the Director, such as a resolution of the board of directors of a corporation.

§ 144.54 Requirements for recording and reporting of monitoring results.

All permits shall specify:

(a) Requirements concerning the proper use, maintenance, and installation, when appropriate, of monitoring equipment or methods (including biological monitoring methods when appropriate);

(b) Required monitoring including type, intervals, and frequency sufficient to yield data which are representative of the monitored activity including when appropriate, continuous monitoring;

(c) Applicable reporting requirements based upon the impact of the regulated activity and as specified in part 146. Reporting shall be no less frequent than specified in the above regulations.

§ 144.55 Corrective action.

(a) *Coverage*. Applicants for Class I, II, (other than existing), or III injection well permits shall identify the location of all known wells within the injection well's area of review which penetrate the injection zone, or in the case

of Class II wells operating over the fracture pressure of the injection formation, all known wells within the area of review penetrating formations affected by the increase in pressure. For such wells which are improperly sealed, completed, or abandoned, the applicant shall also submit a plan consisting of such steps or modifications as are necessary to prevent movement of fluid into underground sources of drinking water (''corrective action''). Where the plan is adequate, the Director shall incorporate it into the permit as a condition. Where the Director's review of an application indicates that the permittee's plan is inadequate (based on the factors in § 146.07), the Director shall require the applicant to revise the plan, prescribe a plan for corrective action as a condition of the permit under paragraph (b) of this section, or deny the application. The Director may disregard the provisions of § 146.06 (Area of Review) and § 146.07 (Corrective Action) when reviewing an application to permit an existing Class II well.

(b) *Requirements*—(1) *Existing injection wells*. Any permit issued for an existing injection well (other than Class II) requiring corrective action shall include a compliance schedule requiring any corrective action accepted or prescribed under paragraph (a) of this section to be completed as soon as possible.

(2) *New injection wells*. No owner or operator of a new injection well may begin injection until all required corrective action has been taken.

(3) *Injection pressure limitation*. The Director may require as a permit condition that injection pressure be so limited that pressure in the injection zone does not exceed hydrostatic pressure at the site of any improperly completed or abandoned well within the area of review. This pressure limitation shall satisfy the corrective action requirement. Alternatively, such injection pressure limitation can be part of a compliance schedule and last until all other required corrective action has been taken.

(4) *Class III wells only*. When setting corrective action requirements the Director shall consider the overall effect of the project on the hydraulic gradient in potentially affected USDWs, and the corresponding changes in potentiometric surface(s) and flow direction(s) rather than the discrete effect of each well. If a decision is made that corrective action is not necessary based on the determinations above, the monitoring program required in § 146.33(b) shall be designed to verify the validity of such determinations.

Subpart F—Financial Responsibility: Class I Hazardous Waste Injection Wells

SOURCE: 49 FR 20186, May 11, 1984, unless otherwise noted.

§ 144.60 Applicability.

(a) The requirements of §§ 144.62, 144.63, and 144.70 apply to owners and operators of all existing and new Class I Hazardous waste injection wells, except as provided otherwise in this section.

§ 144.61 Definitions of terms as used in this subpart.

(a) *Plugging and abandonment plan* means the plan for plugging and abandonment prepared in accordance with the requirements of §§ 144.28 and 144.51.

(b) *Current plugging cost estimate* means the most recent of the estimates prepared in accordance with § 144.62 (a), (b) and (c).

(c) *Parent corporation* means a corporation which directly owns at least 50 percent of the voting stock of the corporation which is the injection well owner or operator; the latter corporation is deemed a *subsidiary* of the parent corporation.

(d) The following terms are used in the specifications for the financial test for plugging and abandonment. The definitions are intended to represent the common meanings of the terms as they are generally used by the business community.

Assets means all existing and all probable future economic benefits obtained or controlled by a particular entity.

Current assets means cash or other assets or resources commonly identified as those which are reasonably expected

to be realized in cash or sold or consumed during the normal operating cycle of the business.

Current liabilities means obligations whose liquidation is reasonably expected to require the use of existing resources properly classifiable as current assets or the creation of other current liabilities.

Independently audited refers to an audit performed by an independent certified public accountant in accordance with generally accepted auditing standards.

Liabilities means probable future sacrifices of economic benefits arising from present obligations to transfer assets or provide services to other entities in the future as a result of past transactions or events.

Net working capital means current assets minus current liabilities.

Net worth means total assets minus total liabilities and is equivalent to owner's equity.

Tangible net worth means the tangible assets that remain after deducting liabilities; such assets would not include intangibles such as goodwill and rights to patents or royalties.

§ 144.62 Cost estimate for plugging and abandonment.

(a) The owner or operator must prepare a written estimate, in current dollars, of the cost of plugging the injection well in accordance with the plugging and abandonment plan as specified in §§ 144.28 and 144.51. The plugging and abandonment cost estimate must equal the cost of plugging and abandonment at the point in the facility's operating life when the extent and manner of its operation would making plugging and abandonment the most expensive, as indicated by its plugging and abandonment plan.

(b) The owner or operator must adjust the plugging and abandonment cost estimate for inflation within 30 days after each anniversary of the date on which the first plugging and abandonment cost estimate was prepared. The adjustment must be made as specified in paragraphs (b) (1) and (2) of this section, using an inflation factor derived from the annual Oil and Gas Field Equipment Cost Index. The inflation factor is the result of dividing the latest published annual Index by the Index for the previous year.

(1) The first adjustment is made by multiplying the plugging and abandonment cost estimate by the inflation factor. The result is the adjusted plugging and abandonment cost estimate.

(2) Subsequent adjustments are made by multiplying the latest adjusted plugging and abandonment cost estimate by the latest inflation factor.

(c) The owner or operator must revise the plugging and abandonment cost estimate whenever a change in the plugging and abandonment plan increases the cost of plugging and abandonment. The revised plugging and abandonment cost estimate must be adjusted for inflation as specified in § 144.62(b).

(d) The owner or operator must keep the following at the facility during the operating life of the facility: the latest plugging and abandonment cost estimate prepared in accordance with § 144.62 (a) and (c) and, when this estimate has been adjusted in accordance with § 144.62(b), the latest adjusted plugging and abandonment cost estimate.

§ 144.63 Financial assurance for plugging and abandonment.

An owner or operator of each facility must establish financial assurance for the plugging and abandonment of each existing and new Class I hazardous waste injection well. He must choose from the options as specified in paragraphs (a) through (f) of this section.

(a) *Plugging and abandonment trust fund*. (1) An owner or operator may satisfy the requirements of this section by establishing a plugging and abandonment trust fund which conforms to the requirements of this paragraph and submitting an originally signed duplicate of the trust agreement to the Regional Administrator. An owner or operator of a Class I well injecting hazardous waste must submit the originally signed duplicate of the trust agreement to the Regional Administrator with the permit application or for approval to operate under rule. The trustee must be an entity which has the authority to act as a trustee and whose trust operations are regulated and examined by a Federal or State agency.

(2) The wording of the trust agreement must be identical to the wording specified in §144.70(a)(1), and the trust agreement must be accompanied by a formal certification of acknowledgment (for example, see §144.70(a)(2)). Schedule A of the trust agreement must be updated within 60 days after a change in the amount of the current plugging and abandonment cost estimate covered by the agreement.

(3) Payments into the trust fund must be made annually by the owner or operator over the term of the initial permit or over the remaining operating life of the injection well as estimated in the plugging and abandonment plan, whichever period is shorter; this period is hereafter referred to as the ''pay-in period.'' The payments into the plugging and abandonment trust fund must be made as follows:

(i) For a new well, the first payment must be made before the initial injection of hazardous waste. A receipt from the trustee for this payment must be submitted by the owner or operator to the Regional Administrator before this initial injection of hazardous waste. The first payment must be at least equal to the current plugging and abandonment cost estimate, except as provided in §144.70(g), divided by the number of years in the pay-in period. Subsequent payments must be made no later than 30 days after each anniversary date of the first payment. The amount of each subsequent payment must be determined by this formula:

$$\text{Next payment} = \frac{PE - CV}{Y}$$

where PE is the current plugging and abandonment cost estimate, CV is the current value of the trust fund, and Y is the number of years remaining in the pay-in period.

(ii) If an owner or operator establishes a trust fund as specified in §144.63(a) of this chapter, and the value of that trust fund is less than the current plugging and abandonment cost estimate when a permit is awarded for the injection well, the amount of the current plugging and abandonment cost estimate still to be paid into the trust fund must be paid in over the pay-in period as defined in paragraph (a)(3) of this section. Payments must continue to be made no later than 30 days after each anniversary date of the first payment made pursuant to part 144 of this chapter. The amount of each payment must be determined by this formula:

$$\text{Next payment} = \frac{PE - CV}{Y}$$

where PE is the current plugging and abandonment cost estimate, CV is the current value of the trust fund, and Y is the number of years remaining in the pay-in period.

(4) The owner or operator may accelerate payments into the trust fund or he may deposit the full amount of the current plugging and abandonment cost estimate at the time the fund is established. However, he must maintain the value of the fund at no less than the value that the fund would have if annual payments were made as specified in paragraph (a)(3) of this section.

(5) If the owner or operator establishes a plugging and abandonment trust fund after having used one or more alternate mechanisms specified in this section or in §144.63 of this chapter, his first payment must be in at least the amount that the fund would contain if the trust fund were established initially and annual payments made according to specifications of this paragraph.

(6) After the pay-in period is completed, whenever the current plugging and abandonment cost estimate changes, the owner or operator must compare the new estimate with the trustee's most recent annual valuation of the trust fund. If the value of the fund is less than the amount of the new estimate, the owner or operator, within 60 days after the change in the cost estimate, must either deposit an amount into the fund so that its value after this deposit at least equals the amount of the current plugging and abandonment cost estimate, or obtain other financial assurance as specified in this section to cover the difference.

(7) If the value of the trust fund is greater than the total amount of the current plugging and abandonment cost estimate, the owner or operator may submit a written request to the Regional Administrator for release of

the amount in excess of the current plugging and abandonment cost estimate.

(8) If an owner or operator substitutes other financial assurance as specified in this section for all or part of the trust fund, he may submit a written request to the Regional Administrator for release of the amount in excess of the current plugging and abandonment cost estimate covered by the trust fund.

(9) Within 60 days after receiving a request from the owner or operator for release of funds as specified in paragraph (a) (7) or (8) of this section, the Regional Administrator will instruct the trustee to release to the owner or operator such funds as the Regional Administrator specifies in writing.

(10) After beginning final plugging and abandonment, an owner or operator or any other person authorized to perform plugging and abandonment may request reimbursement for plugging and abandonment expenditures by submitting itemized bills to the Regional Administrator. Within 60 days after receiving bills for plugging and abandonment activities, the Regional Administrator will determine whether the plugging and abandonment expenditures are in accordance with the plugging and abandonment plan or otherwise justified, and if so, he will instruct the trustee to make reimbursement in such amounts as the Regional Administrator specifies in writing. If the Regional Administrator has reason to believe that the cost of plugging and abandonment will be significantly greater than the value of the trust fund, he may withhold reimbursement of such amounts as he deems prudent until he determines, in accordance with §144.63(i), that the owner or operator is no longer required to maintain financial assurance for plugging and abandonment.

(11) The Regional Administrator will agree to termination of the trust when:

(i) An owner or operator substitutes alternate financial assurance as specified in this section; or

(ii) The Regional Administrator releases the owner or operator from the requirements of this section in accordance with §144.63(i).

(b) *Surety bond guaranteeing payment into a plugging and abandonment trust fund.* (1) An owner or operator must satisfy the requirements of this section by obtaining a surety bond which conforms to the requirements of this paragraph and submitting the bond to the Regional Administrator with the application for a permit or for approval to operate under rule. The bond must be effective before the initial injection of hazardous waste. The surety company issuing the trust must, at a minimum, be among those listed as acceptable sureties on Federal bonds in Circular 570 of the U.S. Department of the Treasury.

(2) The wording of the surety bond must be identical to the wording in §144.70(b).

(3) The owner or operator who uses a surety bond to satisfy the requirements of this section must also establish a standby trust fund. Under the terms of the bond, all payments made thereunder will be deposited by the surety directly into the standby trust fund in accordance with instructions from the Regional Administrator. This standby trust fund must meet the requirements specified in §144.63(a), except that:

(i) An originally signed duplicate of the trust agreement must be submitted to the Regional Administrator with the surety bond; and

(ii) Until the standby trust fund is funded pursuant to the requirements of this section, the following are not required by these requirements:

(A) Payments into the trust fund as specified in §144.63(a);

(B) Updating of Schedule A of the trust agreement [see §144.70(a)] to show current plugging and abandonment cost estimates;

(C) Annual valuations as required by the trust agreement; and

(D) Notices of nonpayment as required by the trust agreement.

(4) The bond must guarantee that the owner or operator will:

(i) Fund the standby trust fund in an amount equal to the penal sum of the bond before beginning of plugging and abandonment of the injection well; or

(ii) Fund the standby trust fund in an amount equal to the penal sum within 15 days after an order to begin plugging

and abandonment is issued by the Regional Administrator or a U.S. district court or other court of competent jurisdiction; or

(iii) Provide alternate financial assurance as specified in this section, and obtain the Regional Administrator's written approval of the assurance provided, within 90 days after receipt by both the owner or operator and the Regional Administrator of a notice of cancellation of the bond from the surety.

(5) Under the terms of the bond, the surety will become liable on the bond obligation when the owner or operator fails to perform as guaranteed by the bond.

(6) The penal sum of the bond must be in amount at least equal to the current plugging and abandonment cost estimate, except as provided in § 144.63(g).

(7) Whenever the current plugging and abandonment cost estimate increases to an amount greater than the penal sum, the owner or operator, within 60 days after the increase, must either cause the penal sum to be increased to an amount at least equal to the current plugging and abandonment cost estimate and submit evidence of such increase to the Regional Administrator, or obtain other financial assurance as specified in this section to cover the increase. Whenever the current plugging and abandonment cost estimate decreases, the penal sum may be reduced to the amount of the current plugging and abandonment cost estimate following written approval by the Regional Administrator.

(8) Under the terms of the bond, the surety may cancel the bond by sending notice of cancellation by certified mail to the owner or operator and to the Regional Administrator. Cancellation may not occur, however, during 120 days beginning on the date of the receipt of the notice of cancellation by both owner or operator and the Regional Administrator as evidenced by the returned receipts.

(9) The owner or operator may cancel the bond if the Regional Administrator has given prior written consent based on his receipt of evidence of alternate financial assurance as specified in this section.

(c) *Surety bond guaranteeing performance of plugging and abandonment.* (1) An owner or operator may satisfy the requirements of this section by obtaining a surety bond which conforms to the requirements of this paragraph and submitting the bond to the Regional Administrator. An owner or operator of a new facility must submit the bond to the Regional Administrator with the permit application or for approval to operate under rule. The bond must be effective before injection of hazardous waste is started. The surety company issuing the bond must, at a minimum, be among those listed as acceptable sureties on Federal bonds in Circular 570 of the U.S. Department of the Treasury.

(2) The wording of the surety bond must be identical to the wording specified in § 144.70(c).

(3) The owner or operator who uses a surety bond to satisfy the requirements of this section must also establish a standby trust fund. Under the terms of the bond, all payments made thereunder will be deposited by the surety directly into the standby trust fund in accordance with instructions from the Regional Administrator. The standby trust must meet the requirements specified in § 144.63(a), except that:

(i) An original signed duplicate of the trust agreement must be submitted to the Regional Administrator with the surety bond; and

(ii) Unless the standby trust fund is funded pursuant to the requirements of this section, the following are not required by these regulations:

(A) Payments into the trust fund as specified in § 144.63(a);

(B) Updating of Schedule A of the trust agreement [see § 144.70(a)] to show current plugging and abandonment cost estimates;

(C) Annual valuations as required by the trust agreement; and

(D) Notices of nonpayment as required by the trust agreement.

(4) The bond must guarantee that the owner or operator will:

(i) Perform plugging and abandonment in accordance with the plugging and abandonment plan and other requirements of the permit for the injection well whenever required to do so; or

(ii) Provide alternate financial assurance as specified in this section, and obtain the Regional Administrator's written approval of the assurance provided, within 90 days after receipt by both the owner or operator and the Regional Administrator of a notice of cancellation of the bond from the surety.

(5) Under the terms of the bond, the surety will become liable on the bond obligation when the owner or operator fails to perform as guaranteed by the bond. Following a determination that the owner or operator has failed to perform plugging and abandonment in accordance with the plugging and abandonment plan and other permit requirements when required to do so, under terms of the bond the surety will perform plugging and abandonment as guaranteed by the bond or will deposit the amount of the penal sum into the standby trust fund.

(6) The penal sum of the bond must be in an amount at least equal to the current plugging and abandonment cost estimate.

(7) Whenever the current plugging and abandonment cost estimate increases to an amount greater than the penal sum, the owner or operator, within 60 days after the increase, must either cause the penal sum to be increased to an amount at least equal to the current plugging and abandonment cost estimate and submit evidence of such increase to the Regional Administrator, or obtain other financial assurance as specified in this section. Whenever the plugging and abandonment cost estimate decreases, the penal sum may be reduced to the amount of the current plugging and abandonment cost estimate following written approval by the Regional Administrator.

(8) Under the terms of the bond, the surety may cancel the bond by sending notice of cancellation by certified mail to the owner or operator and to the Regional Administrator. Cancellation may not occur, however, during the 120 days beginning on the date of receipt of the notice of cancellation by both the owner or operator and the Regional Administrator, as evidenced by the return receipts.

(9) The owner or operator may cancel the bond if the Regional Administrator has given prior written consent. The Regional Administrator will provide such written consent when:

(i) An owner or operator substitute alternate financial assurance as specified in this section; or

(ii) The Regional Administrator releases the owner or operator from the requirements of this section in accordance with § 144.63(i).

(10) The surety will not be liable for deficiencies in the performance of plugging and abandonment by the owner or operator after the Regional Administrator releases the owner or operator from the requirements of this section in accordance with § 144.63(i).

(d) *Plugging and abandonment letter of credit.* (1) An owner or operator may satisfy the requirements of this section by obtaining an irrevocable standby letter of credit which conforms to the requirements of this paragraph and submitting the letter to the Regional Administrator. An owner or operator of an injection well must submit the letter of credit to the Regional Administrator during submission of the permit application or for approval to operate under rule. The letter of credit must be effective before initial injection of hazardous waste. The issuing institution must be an entity which has the authority to issue letters of credit and whose letter-of-credit operations are regulated and examined by a Federal or State agency.

(2) The wording of the letter of credit must be identical to the wording specified in § 144.70(d).

(3) An owner or operator who uses a letter of credit to satisfy the requirements of this section must also establish a standby trust fund. Under the terms of the letter of credit, all amounts paid pursuant to a draft by the Regional Administrator will be deposited by the issuing institution directly into the standby trust fund in accordance with instructions from the Regional Administrator. This standby trust fund must meet the requirements of the trust fund specified in § 144.63(a), except that:

(i) An originally signed duplicate of the trust agreement must be submitted to the Regional Administrator with the letter of credit; and

(ii) Unless the standby trust fund is funded pursuant to the requirements of this section, the following are not required by these regulations:

(A) Payments into the trust fund as specified in § 144.63(a);

(B) Updating of Schedule A of the trust agreement (see § 144.70(a)) to show current plugging and abandonment cost estimates;

(C) Annual valuations as required by the trust agreement; and

(D) Notices of nonpayment as required by the trust agreement.

(4) The letter of credit must be accompanied by a letter from the owner or operator referring to the letter of credit by number, issuing institution, and date, and providing the following information: the EPA Identification Number, name, and address of the facility, and the amount of funds assured for plugging and abandonment of the well by the letter of credit.

(5) The letter of credit must be irrevocable and issued for a period of at least 1 year. The letter of credit must provide that the expiration date will be automatically extended for a period of at least 1 year unless, at least 120 days before the current expiration date, the issuing institution notifies both the owner or operator and the Regional Administrator by certified mail of a decision not to extend the expiration date. Under the terms of the letter of credit, the 120 days will begin on the date when both the owner or operator and the Regional Administrator have received the notice, as evidenced by the return receipts.

(6) The letter of credit must be issued in an amount at least equal to the current plugging and abandonment cost estimate, except as provided in § 144.63(g).

(7) Whenever the current plugging and abandonment cost estimate increases to an amount greater than the amount of the credit, the owner or operator, within 60 days after the increase, must either cause the amount of the credit to be increased so that it at least equals the current plugging and abandonment cost estimate and submit evidence of such increase to the Regional Administrator, or obtain other financial assurance as specified in this section to cover the increase. Whenever the current plugging and abandonment cost estimate decreases, the amount of the credit may be reduced to the amount of the current plugging and abandonment cost estimate following written approval by the Regional Administrator.

(8) Following a determination that the owner or operator has failed to perform final plugging and abandonment in accordance with the plugging and abandonment plan and other permit requirements when required to do so, the Regional Administrator may draw on the letter of credit.

(9) If the owner or operator does not establish alternate financial assurance as specified in this section and obtain written approval of such alternate assurance from the Regional Administrator within 90 days after receipt by both the owner or operator and the Regional Administrator of a notice from the issuing institution that it has decided not to extend the letter of credit beyond the current expiration date, the Regional Administrator will draw on the letter of credit. The Regional Administrator may delay the drawing if the issuing institution grants an extension of the term of the credit. During the last 30 days of any such extension the Regional Administrator will draw on the letter of credit if the owner or operator has failed to provide alternate financial assurance as specified in this section and obtain written approval of such assurance from the Regional Administrator.

(10) The Regional Administrator will return the letter of credit to the issuing institution for termination when:

(i) An owner or operator substitutes alternate financial assurance as specified in this section; or

(ii) The Regional Administrator releases the owner or operator from the requirements of this section in accordance with § 144.63(i).

(e) *Plugging and abandonment insurance.* (1) An owner or operator may satisfy the requirements of this section by obtaining plugging and abandonment insurance which conforms to the requirements of this paragraph and submitting a certificate of such insurance to the Regional Administrator. An owner or operator of a new injection

well must submit the certificate of insurance to the Regional Administrator with the permit application or for approval operate under rule. The insurance must be effective before injection starts. At a minimum, the insurer must be licensed to transact the business of insurance, or eligible to provide insurance as an excess or surplus lines insurer, in one or more States.

(2) The wording of the certificate of insurance must be identical to the wording specified in §144.70(e).

(3) The plugging and abandonment insurance policy must be issued for a face amount at least equal to the current plugging and abandonment estimate, except as provided in §144.63(g). The term ''face amount'' means the total amount the insurer is obligated to pay under the policy. Actual payments by the insurer will not change the face amount, although the insurers future liability will be lowered by the amount of the payments.

(4) The plugging and abandonment insurance policy must guarantee that funds will be available whenever final plugging and abandonment occurs. The policy must also guarantee that once plugging and abandonment begins, the issurer will be responsible for paying out funds, up to an amount equal to the face amount of the policy, upon the direction of the Regional Administrator, to such party or parties as the Regional Administrator specifies.

(5) After beginning plugging and abandonment, an owner or operator or any other person authorized to perform plugging and abandonment may request reimbursement for plugging and abandonment expenditures by submitting itemized bills to the Regional Administrator. Within 60 days after receiving bills for plugging and abandonment activities, the Regional Administrator will determine whether the plugging and abandonment expenditures are in accordance with the plugging and abandonment plan or otherwise justified, and if so, he will instruct the insurer to make reimbursement in such amounts as the Regional Administrator specifies in writing. If the Regional Administrator has reason to believe that the cost of plugging and abandonment will be significantly greater than the face amount of the policy, he may withhold reimbursement of such amounts as he deems prudent until he determines, in accordance with §144.63(i), that the owner or operator is no longer required to maintain financial assurance for plugging and abandonment of the injection well.

(6) The owner or operator must maintain the policy in full force and effect until the Regional Administrator consents to termination of the policy by the owner or operator as specified in paragraph (e)(10) of this section. Failure to pay the premium, without substitution of alternate financial assurance as specified in this section, will constitute a significant violation of these regulations, warranting such remedy as the Regional Administrator deems necessary. Such violation will be deemed to begin upon receipt by the Regional Administrator of a notice of future cancellation, termination, or failure to renew due to nonpayment of the premium, rather than upon the date of expiration.

(7) Each policy must contain provisions allowing assignment to a successor owner or operator. Such assignment may be conditional upon consent of the insurer, provided such consent is not unreasonably refused.

(8) The policy must provide that the insurer may not cancel, terminate, or fail to renew the policy except for failure to pay the premium. The automatic renewal of the policy must, at a minimum, provide the insured with the option of renewal at the face amount of the expiring policy. If there is a failure to pay the premium, the insurer may elect to cancel, terminate, or fail to renew the policy by sending notice by certified mail to the owner or operator and the Regional Administrator. Cancellation, termination, or failure to renew may not occur, however, during 120 days beginning with the date of receipt of the notice by both the Regional Administrator and the owner or operator, as evidenced by the return of receipts. Cancellation, termination, or failure to renew may not occur and the policy will remain in full force and effect in the event that on or before the date of expiration:

(i) The Regional Administrator deems the injection well abandoned; or

(ii) The permit is terminated or revoked or a new permit is denied; or

(iii) Plugging and abandonment is ordered by the Regional Administrator or a U.S. district court or other court of competent jurisdiction; or

(iv) The owner or operator is named as debtor in a voluntary or involuntary proceeding under title 11 (Bankruptcy), U.S. Code; or

(v) The premium due is paid.

(9) Whenever the current plugging and abandonment cost estimate increases to an amount greater than the face amount of the policy, the owner or operator, within 60 days after the increase, must either cause the face amount to be increased to an amount at least equal to the current plugging and abandonment estimate and submit evidence of such increase to the Regional Administrator, or obtain other financial assurance as specified in this section to cover the increase. Whenever the current plugging and abandonment cost estimate decreases, the face amount may be reduced to the amount of the current plugging and abandonment cost estimate following written approval by the Regional Administrator.

(10) The Regional Administrator will give written consent to the owner or operator that he may terminate the insurance policy when:

(i) An owner or operator substitutes alternate financial assurance as specified in this section; or

(ii) The Regional Administrator releases the owner or operator from the requirements of this section in accordance with §144.63(i).

(f) *Financial test and corporate guarantee for plugging and abandonment.* (1) An owner or operator may satisfy the requirements of this section by demonstrating that he passes a financial test as specified in this paragraph. To pass this test the owner or operator must meet the criteria of either paragraph (f)(1)(i) or (f)(1)(ii) of this section:

(i) The owner or operator must have:

(A) Two of the following three ratios: A ratio of total liabilities to net worth less than 2.0; a ratio of the sum of net income plus depreciation, depletion, and amortization to total liabilities greater than 0.1; and a ratio of current assets to current liabilities greater than 1.5; and

(B) Net working capital and tangible net worth each at least six times the sum of the current plugging and abandonment cost estimate; and

(C) Tangible net worth of at least $10 million; and

(D) Assets in the United States amounting to at least 90 percent of his total assets or at least six times the sum of the current plugging and abandonment cost estimate.

(ii) The owner or operator must have:

(A) A current rating for his most recent bond issuance of AAA, AA, A or BBB as issued by Standard and Poor's or Aaa, Aa, A, or Baa as issued by Moody's; and

(B) Tangible net worth at least six times the sum of the current plugging and abandonment cost estimate; and

(C) Tangible net worth of at least $10 million; and

(D) Assets located in the United States amounting to at least 90 percent of his total assets or at least six times the sum of the current plugging and abandonment cost estimates.

(2) The phrase ''current plugging and abandonment cost estimate'' as used in paragraph (f)(1) of this section refers to the cost estimate required to be shown in paragraphs 1 through 4 of the letter from the owner's or operator's chief financial officer §144.70(f).

(3) To demonstrate that he meets this test, the owner or operator must submit the following items to the Regional Administrator:

(i) A letter signed by the owner's or operator's chief financial officer and worded as specified in §144.70(f); and

(ii) A copy of the independent certified public accountant's report on examination of the owner's or operator's financial statements for the latest completed fiscal year; and

(iii) A special report from the owner's or operator's independent certified public accountant to the owner or operator stating that:

(A) He has compared the data which the letter from the chief financial officer specifies as having been derived from the independently audited, year-end financial statements for the latest fiscal year with the amounts in such financial statements; and

(B) In connection with that procedure, no matters came to his attention which caused him to believe that the specified data should be adjusted.

(4) An owner or operator of a new injection well must submit the items specified in paragraph (f)(3) of this section to the Regional Administrator within 90 days after the close of each succeeding fiscal year. This information must consist of all three items specified in paragraph (f)(3) of this section.

(5) After the initial submission of items specified in paragraph (f)(3) of this section, the owner or operator must send updated information to the Regional Administrator within 90 days after the close of each succeeding fiscal year. This information must consist of all three items specified in paragraph (f)(3) of this section.

(6) If the owner or operator no longer meets the requirements of paragraph (f)(1) of this section, he must send notice to the Regional Administrator of intent to establish alternate financial assurance as specified in this section. The notice must be sent by certified mail within 90 days after the end of the fiscal year for which the year-end financial data show that the owner or operator no longer meets the requirements. The owner or operator must provide the alternate financial assurance within 120 days after the end of such fiscal year.

(7) The Regional Administrator may, based on a reasonable belief that the owner or operator may no longer meet the requirements of paragraph (f)(1) of this section, require reports of financial condition at any time from the owner or operator in addition to those specified in paragraph (f)(3) of this section. If the Regional Administrator finds, on the basis of such reports or other information, that the owner or operator no longer meets the requirements of paragraph (f)(1) of this section, the owner or operator must provide alternate financial assurance as specified in this section within 30 days after notification of such a finding.

(8) The Regional Administrator may disallow use of this test on the basis of qualifications in the opinion expressed by the independent certified public accountant in his report on examination of the owner's or operator's financial statements [see paragraph (f)(3)(ii) of this section]. An adverse opinion or disclaimer of opinion will be cause for disallowance. The Regional Administrator will evaluate other qualifications on an individual basis. The owner or operator must provide alternate financial assurance as specified in this section within 30 days after notification of the disallowance.

(9) The owner or operator is no longer required to submit the items specified in paragraph (f)(3) of this section when:

(i) An owner or operator substitutes alternate financial assurance as specified in this section; or

(ii) The Regional Administrator releases the owner or operator from the requirements of this section in accordance with §144.63(i).

(10) An owner or operator may meet the requirements of this section by obtaining a written guarantee, hereafter referred to as ''corporate guarantee.'' The guarantee must be the parent corporation of the owner or operator. The guarantee must meet the requirements for owners or operators in paragraphs (f)(1) through (f)(8) of this section and must comply with the terms of the corporate guarantee. The wording of the corporate guarantee must be identical to the wording specified in §144.70(h). The corporate guarantee must accompany the items sent to the Regional Administrator as specified in paragraph (f)(3) of this section. The terms of the corporate guarantee must provide that:

(i) If the owner or operator fails to perform plugging and abandonment of the injection well covered by the corporate guarantee in accordance with the plugging and abandonment plan and other permit requirements whenever required to do so, the guarantee will do so or establish a trust fund as specified in §144.63(a) in the name of the owner or operator.

(ii) The corporate guarantee will remain in force unless the guarantor sends notice of cancellation by certified mail to the owner or operator and the Regional Administrator, as evidenced by the return receipts. Cancellation may not occur, however, during the 120 days beginning on the date of receipt of the notice of cancellation

by both the owner or operator and the Regional Administrator, as evidenced by the return receipts.

(iii) If the owner or operator fails to provide alternate financial assurance as specified in this section and obtain the written approval of such alternate assurance from the Regional Administrator within 90 days after receipt by both the owner or operator and the Regional Administrator of a notice of cancellation of the corporate guarantee from the guarantor, the guarantor will provide such alternative financial assurance in the name of the owner or operator.

(g) *Use of multiple financial mechanisms.* An owner or operator may satisfy the requirements of this section by establishing more than one financial mechanism per injection well. These mechanisms are limited to trust funds, surety bonds, guaranteeing payment into a trust fund, letters of credit, and insurance. The mechanisms must be as specified in paragraphs (a), (b), (d), and (e), respectively, of this section, except that it is the combination of mechanisms, rather than the single mechanism, which must provide financial assurance for an amount at least equal to the adjusted plugging and abandonment cost. If an owner or operator uses a trust fund in combination with a surety bond or letter of credit, he may use that trust fund as the standby trust fund for the other mechanisms. A single standby trust may be established for two or more mechanisms. The Regional Administrator may invoke any or all of the mechanisms to provide for plugging and abandonment of the injection well.

(h) *Use of a financial mechanism for multiple facilities.* An owner or operator may use a financial assurance mechanism specified in this section to meet the requirements of this section for more than one injection well. Evidence of financial assurance submitted to the Regional Administrator must include a list showing, for each injection well, the EPA Identification Number, name, address, and the amount of funds for plugging and abandonment assured by the mechanism. If the injection wells covered by the mechanism are in more than one Region, identical evidence of financial assurance must be submitted to and maintained with the Regional Administrators of all such Regions. The amount of funds available through the mechanism must be no less than the sum of funds that would be available if a separate mechanism had been established and maintained for each injection well. In directing funds available through the mechanism for plugging and abandonment of any of the injection wells covered by the mechanism, the Regional Administrator may direct only the amount of funds designated for that injection well, unless the owner or operator agrees to use additional funds available under the mechanism.

(i) *Release of the owner or operator from the requirements of this section.* Within 60 days after receiving certifications from the owner or operator and an independent registered professional engineer that plugging and abandonment has been accomplished in accordance with the plugging and abandonment plan, the Regional Administrator will notify the owner or operator in writing that he is no longer required by this section to maintain financial assurance for plugging and abandonment of the injection well, unless the Regional Administrator has reason to believe that plugging and abandonment has not been in accordance with the plugging and abandonment plan.

§ 144.64 Incapacity of owners or operators, guarantors, or financial institutions.

(a) An owner or operator must notify the Regional Administrator by certified mail of the commencement of a voluntary or involuntary proceeding under title 11 (Bankruptcy), U.S. Code, naming the owner or operator as debtor, within 10 business days after the commencement of the proceeding. A guarantor of a corporate guarantee as specified in § 144.63(f) must make such a notification if he is named as debtor, as required under the terms of the guarantee (§ 144.70(f)).

(b) An owner or operator who fulfills the requirements of § 144.63 by obtaining a letter of credit, surety bond, or insurance policy will be deemed to be without the required financial assurance or liability coverage in the event

of bankruptcy, insolvency, or a suspension or revocation of the license or charter of the issuing institution. The owner or operator must establish other financial assurance or liability coverage within 60 days after such an event.

§ 144.65 Use of State-required mechanisms.

(a) For a facility located in a State where EPA is administering the requirements of this subpart but where the State has plugging and abandonment regulations that include requirements for financial assurance of plugging and abandonment, an owner or operator may use State-required financial mechanisms to meet the requirements of this subpart if the Regional Administrator determines that the State mechanisms are at least equivalent to the mechanisms specified in this subpart. The Regional Administrator will evaluate the equivalency of the mechanisms mainly in terms of (1) certainty of the availability of funds for the required plugging and abandonment activities and (2) the amount of funds that will be made available. The Regional Administrator may also consider other factors. The owner or operator must submit to the Regional Administrator evidence of the establishment of the mechanism together with a letter requesting that the State-required mechanism be considered acceptable for meeting the requirements of this subpart. The submittal must include the following information: The facility's EPA Identification Number, name and address, and the amounts of funds for plugging and abandonment coverage assured by the mechanism. The Regional Administrator will notify the owner or operator of his determination regarding the mechanism's acceptability. The Regional Administrator may require the owner or operator to submit additional information as is deemed necessary for making this determination.

(b) If a State-required mechanism is found acceptable as specified in paragraph (a) of this section except for the amount of funds available, the owner or operator may satisfy the requirements of this subpart by increasing the funds available through the State-required mechanism or using additional mechanisms as specified in this subpart. The amounts of funds available through the State and Federal mechanisms must at least equal the amounts required by this subpart.

§ 144.66 State assumption of responsibility.

(a) If a State either assumes legal responsibility for an owner's or operator's compliance with the plugging and abandonment requirements of these regulations or assures that funds will be available from State sources to cover these requirements, the owner or operator will be in compliance with the requirements of this subpart if the Regional Administrator determines that the State's assumption of responsibility is at least equivalent to the mechanisms specified in this subpart. The Regional Administrator will evaluate the equivalency of State guarantees mainly in terms of (1) certainty of the availability of funds for the required plugging and abandonment coverage and (2) the amount of funds that will be made available. The Regional Administrator may also consider other factors. The owner or operator must submit to the Regional Administrator a letter from the State describing the nature of the State's assumption of responsibility together with a letter from the owner or operator requesting that the State's asumption of responsibility be considered acceptable for meeting the requirements of this subpart. The letter from the State must include, or have attached to it, the following information: the facility's EPA Identification Number, name and address, and the amounts of funds for plugging and abandonment coverage that are guaranteed by the State. The Regional Administrator will notify the owner or operator of his determination regarding the acceptability of the State's guarantee in lieu of mechanisms specified in this subpart. The Regional Administrator may require the owner or operator to submit additional information as is deemed necessary to make this determination. Pending this determination, the owner or operator will be deemed to be in compliance with § 144.63.

(b) If a State's assumption of responsibility is found acceptable as specified in paragraph (a) of this section except for the amount of funds available, the owner or operator may satisfy the requirements of this subpart by use of both the State's assurance and additional financial mechanisms as specified in this subpart. The amount of funds available through the State and Federal mechanisms must at least equal the amount required by this subpart.

§ 144.70 Wording of the instruments.

(a)(1) A trust agreement for a trust fund, as specified in § 144.63(a) of this chapter, must be worded as follows, except that instructions in brackets are to be replaced with the relevant information and the brackets deleted:

TRUST AGREEMENT

TRUST AGREEMENT, the ''Agreement,'' entered into as of [date] by and between [name of the owner or operator], a [name of State] [insert ''corporation,'' ''partnership,'' ''association,'' or ''proprietorship''], the ''Grantor,'' and [name of corporate trustee], [insert ''incorporated in the State of _____'' or ''a national bank''], the ''Trustee.''

Whereas, the United States Environmental Protection Agency, ''EPA,'' an agency of the United States Government, has established certain regulations applicable to the Grantor, requiring that an owner or operator of an injection well shall provide assurance that funds will be available when needed for plugging and abandonment of the injection well,

Whereas, the Grantor has elected to establish a trust to provide all or part of such financial assurance for the facility(ies) identified herein,

Whereas, the Grantor, acting through its duly authorized officers, has selected the Trustee to be the trustee under this agreement, and the Trustee is willing to act as trustee,

Now, therefore, the Grantor and the Trustee agree as follows:

Section 1. Definitions. As used in this Agreement:

(a) The term ''Grantor'' means the owner or operator who enters into this Agreement and any successors or assigns of the Grantor.

(b) The term ''Trustee'' means the Trustee who enters into this Agreement and any successor Trustee.

(c) Facility or activity means any ''underground injection well'' or any other facility or activity that is subject to regulation under the Underground Injection Control Program.

Section 2. Identification of Facilities and Cost Estimates. This Agreement pertains to the facilities and cost estimates identified on attached Schedule A [on Schedule A, for each facility list the EPA Identification Number, name, address, and the current plugging and abandonment cost estimate, or portions thereof, for which financial assurance is demonstrated by this Agreement].

Section 3. Establishment of Fund. The Grantor and the Trustee hereby establish a trust fund, the ''Fund,'' for the benefit of EPA. The Grantor and the Trustee intend that no third party have access to the Fund except as herein provided. The Fund is established initially as consisting of the property, which is acceptable to the Trustee, described in Schedule B attached hereto. Such property and any other property subsequently transferred to the Trustee is referred to as the Fund, together with all earnings and profits thereon, less any payments or distributions made by the Trustee pursuant to this Agreement. The Fund shall be held by the Trustee, IN TRUST, as hereinafter provided. The Trustee shall not be responsible nor shall it undertake any responsibility for the amount or adequacy of, nor any duty to collect from the Grantor, any payments necessary to discharge any liabilities of the Grantor established by EPA.

Section 4. Payment for Plugging and Abandonment. The Trustee shall make payments from the Fund as the EPA Regional Administrator shall direct, in writing, to provide for the payment of the costs of plugging and abandonment of the injection wells covered by this Agreement. The Trustee shall reimburse the Grantor or other persons as specified by the EPA Regional Administrator from the Fund for plugging and abandonment expenditures in such amounts as the EPA Regional Administrator shall direct in writing. In addition, the Trustee shall refund to the Grantor such amounts as the EPA Regional Administrator specifies in writing. Upon refund, such funds shall no longer constitute part of the Fund as defined herein.

Section 5. Payments Comprising the Fund. Payments made to the Trustee for the Fund shall consist of cash or securities acceptable to the Trustee.

Section 6. Trustee Management. The Trustee shall invest and reinvest the principal and income of the Fund and keep the Fund invested as a single fund, without distinction between principal and income, in accordance with general investment policies and guidelines which the Grantor may communicate in writing to the Trustee from time to time, subject, however, to the provisions of this Section. In investing, reinvesting, exchanging, selling, and managing the Fund, the Trustee shall discharge his duties with respect to the trust fund solely in the interest of the beneficiary and with the care, skill,

prudence, and diligence under the circumstances then prevailing which persons of prudence, acting in a like capacity and familiar with such matters, would use in the conduct of an enterprise of a like character and with like aims; *except that:*

(i) Securities or other obligations of the Grantor, or any other owner or operator of the facilities, or any of their affiliates as defined in the Investment Company Act of 1940, as amended, 15 U.S.C. 80a–2.(a), shall not be acquired or held, unless they are securities or other obligations of the Federal or a State government;

(ii) The Trustee is authorized to invest the Fund in time or demand deposits of the Trustee, to the extent insured by an agency of the Federal or State government; and

(iii) The Trustee is authorized to hold cash awaiting investment or distribution uninvested for a reasonable time and without liability for the payment of interest thereon.

Section 7. Commingling and Investment. The Trustee is expressly authorized in its discretion:

(a) To transfer from time to time any or all of the assets of the Fund to any common, commingled, or collective trust fund created by the Trustee in which the Fund is eligible to participate, subject to all of the provisions thereof, to be commingled with the assets of other trusts participating therein; and

(b) To purchase shares in any investment company registered under the Investment Company Act of 1940, 15 U.S.C. 80a–1 *et seq.*, including one which may be created, managed, underwritten, or to which investment advice is rendered or the shares of which are sold by the Trustee. The Trustee may vote shares in its discretion.

Section 8. Express Powers of Trustee. Without in any way limiting the powers and discretions conferred upon the Trustee by the other provisions of this Agreement or by law, the Trustee is expressly authorized and empowered:

(a) To sell, exchange, convey, transfer, or otherwise dispose of any property held by it, by public or private sale. No person dealing with the Trustee shall be bound to see to the application of the purchase money or to inquire into the validity or expediency of any such sale or other disposition;

(b) To make, execute, acknowledge, and deliver any and all documents of transfer and conveyance and any and all other instruments that may be necessary or appropriate to carry out the powers herein granted;

(c) To register any securities held in the Fund in its own name or in the name of a nominee and to hold any security in bearer form or in book entry, or to combine certificates representing such securities with certificates of the same issue held by the Trustee in other fiduciary capacities, or to deposit or arrange for the deposit of such securities in a qualified central depository even though, when so deposited, such securities may be merged and held in bulk in the name of the nominee of such depositary with other securities deposited therein by another person, or to deposit or arrange for the deposit of any securities issued by the United States Government, or any agency or instrumentality thereof, with a Federal Reserve bank, but the books and records of the Trustee shall at all times show that all such securities are part of the Fund;

(d) To deposit any cash in the Fund in interest-bearing accounts maintained or savings certificates issued by the Trustee, in its separate corporate capacity, or in any other banking institution affiliated with the Trustee, to the extent insured by an agency of the Federal or State government; and

(e) To compromise or otherwise adjust all claims in favor of or against the Fund.

Section 9. Taxes and Expenses. All taxes of any kind that may be assessed or levied against or in respect of the Fund and all brokerage commissions incurred by the Fund shall be paid from the Fund. All other expenses incurred by the Trustee in connection with the administration of this Trust, including fees for legal services rendered to the Trustee, the compensation of the Trustee to the extent not paid directly by the Grantor, and all other proper charges and disbursements of the Trustee shall be paid from the Fund.

Section 10. Annual Valuation. The Trustee shall annually, at least 30 days prior to the anniversary date of establishment of the Fund, furnish to the Grantor and to the appropriate EPA Regional Administrator a statement confirming the value of the Trust. Any securities in the Fund shall be valued at market value as of no more than 60 days prior to the anniversary date of establishment of the Fund. The failure of the Grantor to object in writing to the Trustee within 90 days after the statement has been furnished to the Grantor and the EPA Regional Administrator shall constitute a conclusively binding assent by the Grantor, barring the Grantor from asserting any claim or liability against the Trustee with respect to matters disclosed in the statement.

Section 11. Advice of Counsel. The Trustee may from time to time consult with counsel, who may be counsel to the Grantor, with respect to any question arising as to the construction of this Agreement of any action to be taken hereunder. The Trustee shall be fully protected, to the extent permitted by law, in acting upon the advice of counsel.

Section 12. Trustee Compensation. The Trustee shall be entitled to reasonable compensation for its services as agreed upon in writing from time to time with the Grantor.

Section 13. Successor Trustee. The Trustee may resign or the Grantor may replace the

Trustee, but such resignation or replacement shall not be effective until the Grantor has appointed a successor trustee and this successor accepts the appointment. The successor trustee shall have the same powers and duties as those conferred upon the Trustee hereunder. Upon the successor trustee's acceptance of the appointment, the Trustee shall assign, transfer, and pay over to the successor trustee the funds and properties then constituting the Fund. If for any reason the Grantor cannot or does not act in the event of the resignation of the Trustee, the Trustee may apply to a court of competent jurisdiction for the appointment of a successor trustee or for instructions. The successor trustee shall specify the date on which it assumes administration of the trust in a writing sent to the Grantor, the EPA Regional Administrator, and the present Trustee by certified mail 10 days before such change becomes effective. Any expenses incurred by the Trustee as a result of any of the acts contemplated by this Section shall be paid as provided in Section 9.

Section 14. Instructions to the Trustee. All orders, requests, and instructions by the Grantor to the Trustee shall be in writing, signed by such persons as are designated in the attached Exhibit A or such other designees as the Grantor may designate by amendment to Exhibit A. The Trustee shall be fully protected in acting without inquiry in accordance with the Grantor's orders, requests, and instructions. All orders, requests, and instructions by the EPA Regional Administrator to the Trustee shall be in writing, signed by the EPA Regional Administrators of the Regions in which the facilities are located, or their designees, and the Trustee shall act and shall be fully protected in acting in accordance with such orders, requests, and instructions. The Trustee shall have the right to assume, in the absence of written notice to the contrary, that no event constituting a change or a termination of the authority of any person to act on behalf of the Grantor or EPA hereunder has occurred. The Trustee shall have no duty to act in the absence of such orders, requests, and instructions from the Grantor and/or EPA, except as provided for herein.

Section 15. Notice of Nonpayment. The Trustee shall notify the Grantor and the appropriate EPA Regional Administrator, by certified mail within 10 days following the expiration of the 30-day period after the anniversary of the establishment of the Trust, if no payment is received from the Grantor during that period. After the pay-in period is completed, the Trustee shall not be required to send a notice of nonpayment.

Section 16. Amendment of Agreement. This Agreement may be amended by an instrument in writing executed by the Grantor, the Trustee, and the appropriate EPA Regional Administrator, or by the Trustee and the appropriate EPA Regional Administrator if the Grantor ceases to exist.

Section 17. Irrevocability and Termination. Subject to the right of the parties to amend this Agreement as provided in Section 16, this Trust shall be irrevocable and shall continue until terminated at the written agreement of the Grantor, the Trustee, and the EPA Regional Administrator, or by the Trustee and the EPA Regional Administrator if the Grantor ceases to exist. Upon termination of the Trust, all remaining trust property, less final trust administration expenses, shall be delivered to the Grantor.

Section 18. Immunity and Indemnification. The Trustee shall not incur personal liability of any nature in connection with any act or omission, made in good faith, in the administration of this Trust, or in carrying out any directions by the Grantor or the EPA Regional Administrator issued in accordance with this Agreement. The Trustee shall be indemnified and saved harmless by the Grantor or from the Trust Fund, or both, from and against any personal liability to which the Trustee may be subjected by reason of any act or conduct in its official capacity, including all expenses reasonably incurred in its defense in the event the Grantor fails to provide such defense.

Section 19. Choice of Law. This Agreement shall be administered, construed, and enforced according to the laws of the State of [insert name of State].

Section 20. Interpretation. As used in this Agreement, words in the singular include the plural and words in the plural include the singular. The descriptive headings for each Section of this Agreement shall not affect the interpretation or the legal efficacy of this Agreement.

In Witness Whereof the parties have caused this Agreement to be executed by their respective officers duly authorized and their corporate seals to be hereunto affixed and attested as of the date first above written. The parties below certify that the wording of this Agreement is identical to the wording specified in 40 CFR 144.70(a)(1) as such regulations were constituted on the date first above written.

[Signature of Grantor]
By [Title]
Attest:

[TITLE]

[SEAL]

[Signature of Trustee]
By
Attest:

[TITLE]

[SEAL]

(2) The following is an example of the certification of acknowledgment which must accompany the trust agreement for a trust fund as specified in §144.63(a). State requirements may differ on the proper content of this acknowledgment.

State of _____
County of _____

On this [date], before me personally came [owner or operator] to me known, who, being by me duly sworn, did depose and say that she/he resides at [address], that she/he is [title] of [corporation], the corporation described in and which executed the above instrument; that she/he knows the seal of said corporation; that the seal affixed to such instrument is such corporate seal; that it was so affixed by order to the Board of Directors of said corporation, and that she/he signed her/his name thereto by like order.

[Signature of Notary Public]

(b) A surety bond guaranteeing payment into a trust fund, as specified in §144.63 of this chapter, must be worded as follows, except that instructions in brackets are to be replaced with the relevant information and the brackets deleted:

FINANCIAL GUARANTEE BOND

Dated bond executed: _____
Effective date: _____

Principal: [legal name and business address of owner or operator].

Type of organization: [insert ''individual,'' ''joint venture,'' ''partnership,'' or ''corporation''].

State of incorporation: _____

Surety(ies): [name(s) and business address(es)].

EPA Identification Number, name, address, and plugging and abandonment amount(s) for each facility guaranteed by this bond [indicate plugging and abandonment amounts separately]: _____

Total penal sum of bond: $_____

Surety's bond number: _____

Know All Persons By These Presents, That we, the Principal and Surity(ies) hereto are firmly bound to the U.S. Environmental Protection Agency (hereinafter called EPA), in the above penal sum for the payment of which we bind ourselves, our heirs, executors, administrators, successors, and assigns jointly and severally; provided that, where the Surety(ies) are corporations acting as cosurties, we, the Sureties, bind ourselves in such sum ''jointly and severally'' only for the purpose of allowing a joint action or actions against any or all of us, and for all other purposes each Surety binds itself, jointly and severally with the Principal, for the payment of such sum only as is set forth opposite the name of such Surety, but if no limit of liability is indicated, the limit of liability shall be the full amount of the penal sum.

Whereas said Principal is required, under the Underground Injection Control Regulations (UIC), to have a permit or comply with requirements to operate under rule in order to own or operate each injection well identified above, and

Whereas said Principal is required to provide financial assurance for plugging and abandonment as a condition of the permit or provisions to operate under rule, and

Whereas said Principal shall establish a standby trust fund as is required when a surety bond is used to provide such financial assurance;

Now, therefore, the conditions of the obligation are such that if the Principal shall faithfully, before the beginning of plugging and abandonment of each injection well identified above, fund the standby trust fund in the amount(s) identified above for the injection well,

Or if the Principal shall fund the standby trust fund in such amount(s) within 15 days after an order to begin plugging and abandonment is issued by an EPA Regional Administrator or a U.S. district court or other court of competent jurisdiction,

Or, if the Principal shall provide alternate financial assurance, as specified in subpart F of 40 CFR part 144, as applicable, and obtain the EPA Regional Administrator's written approval of such assurance, within 90 days after the date of notice of cancellation is received by both the Principal and the EPA Regional Administrator(s) from the Surety(ies), then this obligation shall be null and void, otherwise it is to remain in full force and effect.

The Surety(ies) shall become liable on this bond obligation only when the Principal has failed to fulfill the conditions described above. Upon notification by an EPA Regional Administrator that the Principal has failed to perform as guaranteed by this bond, the Surety(ies) shall place funds in the amount guaranteed for the injection well(s) into the standby trust funds as directed by the EPA Regional Administrator.

The liability of the Surety(ies) shall not be discharged by any payment or succession of payments hereunder, unless and until such payment or payments shall amount in the aggregate to the penal sum of the bond, but in no event shall the obligation of the Surety(ies) hereunder exceed the amount of said penal sum.

The Surety(ies) may cancel the bond by sending notice of cancellation by certified

mail to the Principal and to the EPA Regional Administrator(s) for the Region(s) in which the injection well(s) is (are) located, provided, however, that that cancellation shall not occur during the 120 days beginning on the date of receipt of the notice of cancellation by both the Principal and the EPA Regional Administrator(s), as evidenced by the return receipts.

The Principal may terminate this bond by sending written notice to the Surety(ies), provided, however, that no such notice shall become effective until the Surety(ies) receive(s) written authorization for termination of the bond by the EPA Regional Administrator(s) of the Region(s) in which the bonded facility(ies) is (are) located.

[The following paragraph is an optional rider that may be included but is not required.]

Principal and Surety(ies) hereby agree to adjust the penal sum of the bond yearly so that it guarantees a new plugging and abandonment amount, provided that the penal sum does not increase by more than 20 percent in any one year, and no decrease in the penal sum takes place without the written permission of the EPA Regional Administrator(s).

In Witness Whereof, the Principal and Surety(ies) have executed this Financial Guarantee Bond and have affixed their seals on the date set forth above.

The persons whose signatures appear below hereby certify that they are authorized to execute this surety bond on behalf of the Principal and Surety(ies) and that the wording of this surety bond is identical to the wording specified in 40 CFR 144.70(b) as such regulations were constituted on the date this bond was executed.

PRINCIPAL

[Signature(s)]
[Name(s)]
[Title(s)]
[Corporate seal]

CORPORATE SURETY(IES)

[Name and address]
State of incorporation: _____.
Liability limit: $_____.
[Signature(s)]
[Name(s) and title(s)]
[Corporate seal]
[For every co-surety, provide signature(s), corporate seal, and other information in the same manner as for Surety above.]
Bond premium: $_____.

(c) A surety bond guaranteeing performance of plugging and abandonment, as specified in §144.63(c), must be worded as follows, except that the instructions in brackets are to be replaced with the relevant information and the brackets deleted:

PERFORMANCE BOND

Date bond executed: _____.
Effective date: _____.
Principal: [legal name and business address of owner or operator].
Type of organization: [insert ''individual,'' ''joint venture,'' ''partnership,'' or ''corporation'']
State of incorporation: _____.
Surety(ies): [name(s) and business address(es)]

EPA Identification Number, name, address, and plugging and abandonment amounts(s) for each injection well guaranteed by this bond [indicate plugging and abandonment amounts for each well]:

Total penal sum of bond: $_____.
Surety's bond number: _____.

Know All Persons By These Presents, That We, the Principal and Surety(ies) hereto are firmly bound to the U.S. Environmental Protection Agency [hereinafter called EPA], in the above penal sum for the payment of which we bind ourselves, our heirs, executors, administrators, successors, and assigns jointly and severally; provided that, where the Surety(ies) are corporations acting as co-sureties, we, the Sureties, bind ourselves in such sum ''jointly and severally'' only for the purpose of allowing a joint action or actions against any or all of us, and for all other purposes each Surety binds itself, jointly and severally with the Principal, for the payment of such sum only as is set forth opposite the name of such Surety, but if no limit of liability is indicated, the limit of liability shall be the full amount of the penal sum.

Whereas said Principal is required, under the Undergound Injection Control Regulations, as amended, to have a permit or comply with provisions to operate under rule for each injection well identified above, and

Whereas said Principal is required to provide financial assurance for plugging and abandonment as a condition of the permit or approval to operate under rule, and

Whereas said Principal shall establish a standby trust fund as is required when a surety bond is used to provide such financial assurance;

Now, Therefore, the conditions of this obligation are such that if the Principal shall faithfully perform plugging and abandonment, whenever required to do so, of each injection well for which this bond guarantees plugging and abandonment, in accordance with the plugging and abandonment plan and other rquirements of the permit or provisions for operating under rule and other requirements of the permit or provisions for

operating under rule as may be amended, pursuant to all applicable laws, statutes, rules and regulations, as such laws, statutes, rules, and regulations may be amended,

Or, if the Principal shall provide alternate financial assurance as specified in subpart F of 40 CFR part 144, and obtain the EPA Regional Administrator's written approval of such assurance, within 90 days after the date of notice of cancellation is received by both the Principal and the EPA Regional Administrator(s) from the Surety(ies), then this obligation shall be null and void, otherwise it is to remain in full force and effect.

The Surety(ies) shall become liable on this bond obligation only when the Principal has failed to fulfill the conditions described above.

Upon notification by an EPA Regional Administrator that the Principal has been found in violation of the plugging and abandonment requirements of 40 CFR part 144, for an injection well which this bond guarantees performances of plugging and abandonment, the Surety(ies) shall either perform plugging and abandonment in accordance with the plugging and abandonment plan and other permit requirements or provisions for operating under rule and other requirements or place the amount for plugging and abandonment into a standby trust fund as directed by the EPA Regional Administrator.

Upon notification by an EPA Regional Administrator that the Principal has failed to provide alternate financial assurance as specified in subpart F of 40 CFR part 144, and obtain written approval of such assurance from the EPA Regional Administrator(s) during the 90 days following receipt by both the Principal and the EPA Regional Administrator(s) of a notice of cancellation of the bond, the Surety(ies) shall place funds in the amount guaranteed for the injection well(s) into the standby trust fund as directed by the EPA Regional Administrator.

The surety(ies) hereby waive(s) notification of amendments to plugging and abandonment plans, permits, applicable laws, statutes, rules, and regulations and agrees that no such amendment shall in any way alleviate its (their) obligation on this bond.

The liability of the Surety(ies) shall not be discharged by any payment or succession of payments hereunder, unless and until such payment or payments shall amount in the aggregate to the penal sum of the bond, but in no event shall the obligation of the Surety(ies) hereunder exceed the amount of said penal sum.

The Surety(ies) may cancel the bond by sending notice by certified mail to the owner or operator and to the EPA Regional Administrator(s) for the Region(s) in which the injection well(s) is (are) located, provided, however, that cancellation shall not occur during the 120 days beginning on the date of receipt of the notice of cancellation by both the Principal and the EPA Regional Administrator(s), as evidenced by the return receipts.

The principal may terminate this bond by sending written notice to the Surety(ies), provided, however, that no such notice shall become effective until the Surety(ies) receive(s) written authorization for termination of the bond by the EPA Regional Administrator(s) of the EPA Region(s) in which the bonded injection well(s) is (are) located.

[The following paragraph is an optional rider that may be included but is not required.]

Principal and Surety(ies) hereby agree to adjust the penal sum of the bond yearly so that it guarantees a new plugging and abandonment amount, provided that the penal sum does not increase by more than 20 percent in any one year, and no decrease in the penal sum takes place without the written permission of the EPA Regional Administrator(s).

In Witness Whereof, The Principal and Surety(ies) have executed this Performance Bond and have affixed their seals on the date set forth above.

The persons whose signatures appear below hereby certify that they are authorized to execute this surety bond on behalf of the Principal and Surety(ies) and that the wording on this surety bond is identical to the wording specified in 40 CFR 144.70(c) as such regulation was constituted on the date this bond was executed.

Principal.
[Signature(s)]
[Name(s)]
[Title(s)]
[Corporate seal]
[Corporate Surety(ies)]
[Name and address]
State of incorporation:

Liability limit: $_____.
[Signature(s)]
[Name(s) and title(s)]
Corporate seal:
[For every co-surety, provide signature(s), corporate seal, and other information in the same manner as for Surety above.]
Bond premium: $_____.

(d) A letter of credit, as specified in §144.63(d) of this chapter, must be worded as follows, except that instructions in brackets are to be replaced with the relevant information and the brackets deleted:

IRREVOCABLE STANDBY LETTER OF CREDIT

Regional Administrator(s)
Region(s) _____
U.S. Environmental Protection Agency.
Dear Sir or Madam:

We hereby establish our Irrevocable Standby Letter of Credit No. _____ in your favor,

at the request and for the account of [owner's or operator's name and address] up to the aggregate amount of [in words] U.S. dollars $_____, available upon presentation [insert, if more than one Regional Administrator is a beneficiary, ''by any one of you''] of

(1) Your sight draft, bearing reference to this letter of credit No. _____, and

(2) Your signed statement reading as follows: ''I certify that the amount of the draft is payable pursuant to regulations issued under authority of the Safe Drinking Water Act.''

This letter of credit is effective as of [date] and shall expire on [date at least 1 year later], but such expiration date shall be automatically extended for a period of [at least 1 year] on [date] and on each successive expiration date, unless, at least 120 days before the current expiration date, we notify both you and [owner's or operator's name] by certified mail that we have decided not to extend this letter of credit beyond the current expiration date. In the event you are so notified, any unused portion of the credit shall be available upon presentation of your sight draft for 120 days after the date of receipt by both you and [owner's or operator's name], as shown on the signed return receipts.

Whenever this letter of credit is drawn on under and in compliance with the terms of this credit, we shall duly honor such draft upon presentation to us, and we shall deposit the amount of the draft directly into the standby trust fund of [owner's or operator's name] in accordance with your instructions.

We certify that the wording of this letter of credit is identical to the wording specified in 40 CFR 144.70(d) as such regulations were constituted on the date shown immediately below.

[Signature(s) and title(s) of official(s) of issuing institution]

[Date]

This credit is subject to [insert ''the most recent edition of the Uniform Customs and Practice for Documentary Credits, published and copyrighted by the International Chamber of Commerce,'' or ''the Uniform Commercial Code'']].

(e) A certificate of insurance, as specified in §144.63(e) of this chapter, must be worded as follows, except that instructions in brackets are to be replaced with the relevant information and the brackets deleted:

Certificate of Insurance for Plugging and Abandonment

Name and Address of Insurer (herein called the ''insurer''):

_____

Name and Address of Insurer (herein called the ''insurer''):

_____

Injection Wells covered: [list for each well: The EPA Identification Number, name, address, and the amount of insurance for plugging and abandonment (these amounts for all injection wells covered must total the face amount shown below).]

Face Amount: _____

Policy Number: _____

Effective Date: _____

The insurer hereby certifies that it has issued to the Insured the policy of insurance identified above to provide financial assurance for plugging and abandonment for the injection wells identified above. The Insurer further warrants that such policy conforms in all respects with the requirements of 40 CFR 144.63(e), as applicable and as such regulations were constituted on the date shown immediately below. It is agreed that any provision of the policy inconsistent with such regulations is hereby amended to eliminate such inconsistency.

Whenever requested by the EPA Regional Administrator(s) of the U.S. Environmental Protection Agency, the Insurer agrees to furnish to the EPA Regional Administrator(s) a duplicate original of the policy listed above, including all endorsements thereon.

I hereby certify that the wording of this certificate is identical to the wording specified in 40 CFR 144.70(e) as such regulations were constituted on the date shown immediately below.

[Authorized signature of Insurer]

[Name of person signing]

[Title of person signing]

[Signature of witness or notary:]

_____

[Date]

(f) A letter from the chief financial officer, as specified in §144.63(f) of this chapter, must be worded as follows, except that instructions in brackets are to be replaced with the relevant information and the brackets deleted:

LETTER FROM CHIEF FINANCIAL OFFICER

[Address to Regional Administrator of every Region in which injection wells for which financial responsibility is to be demonstrated through the financial test are located.]

I am the chief financial officer of [name and address of firm.] This letter is in support of this firm's use of the financial test to demonstrate financial assurance, as specified in subpart F of 40 CFR part 144.

[Fill out the following four paragraphs regarding injection wells and associated cost estimates. If your firm has no injection wells that belong in a particular paragraph, write ''None'' in the space indicated. For each injection well, include its EPA Identification

Number, name, address, and current plugging and abandonment cost estimate.]

1. This firm is the owner or operator of the following injection wells for which financial assurance for plugging and abandonment is demonstrated through the financial test specified in subpart F of 40 CFR part 144. The current plugging and abandonment cost estimate covered by the test is shown for each injection well: _____.

2. This firm guarantees, through the corporate guarantee specified in subpart F of 40 CFR part 144, the plugging and abandonment of the following injection wells owned or operated by subsidaries of this firm. The current cost estimate for plugging and abandonment so guaranteed is shown for each injection well: _____.

3. In States where EPA is not administering the financial requirements of subpart F of 40 CFR part 144, this firm, as owner or operator or guarantor, is demonstrating financial assurance for the plugging and abandoment of the following injection wells through the use of a test equivalent or substantially equivalent to the financial test specified in subpart F of 40 CFR part 144. The current plugging and abandonment cost estimate covered by such a test is shown for each injection well: _____.

4. This firm is the owner or operator of the following injection wells for which financial assurance for plugging and abandonment is not demonstrated either to EPA or a State through the financial test or any other financial assurance mechanism specified in subpart F of 40 CFR part 144 or equivalent or substantially equivalent State mechanisms. The current plugging and abandonment cost estimate not covered by such financial assurance is shown for each injection well: _____.

This firm [insert ''is required'' or ''is not required''] to file a Form 10K with the Securities and Exchange Commission (SEC) for the latest fiscal year.

The fiscal year of this firm ends on [month, day]. The figures for the following items marked with an asterisk are derived from this firm's independently audited, year-end financial statements for the latest completed fiscal year, ended [date].

[Fill in Alternative I if the criteria of paragraph (f)(1)(i) of §144.63 of this chapter are used. Fill in Alternative II if the criteria of paragraph (f)(1)(ii) of §144.63 of this chapter are used.]

ALTERNATIVE I

1. (a) Current plugging and abandonment cost	$_____
(b) Sum of the company's financial responsibilities under 40 CFR Parts 264 and 265, Subpart H, currently met using the financial test or corporate guarantee.	
(c) Total of lines a and b.	

ALTERNATIVE I—Continued

*2. Total liabilities [if any portion of the plugging and abandonment cost is included in total liabilities, you may deduct the amount of that portion from this line and add that amount to lines 3 and 4].	
*3. Tangible net worth.	
*4. Net worth.	
*5. Current assets.	
*6. Current liabilities.	
*7. Net working capital [line 5 minus line 6].	
*8. The sum of net income plus depreciation, depletion and amortization.	
*9. Total assets in U.S. (required only if less than 90% of firm's assets are located in U.S.).	

	Yes	No
10. Is line 3 at least $10 million?.		
11. Is line 3 at least 6 times line 1(c)?.		
12. Is line 7 at least 6 times line 1(c)?.		
*13. Are at least 90% of firm's assets located in the U.S.? If not, complete line 14..		
14. Is line 9 at least 6 times line 1(c)?.		
15. Is line 2 divided by line 4 less than 2.0?.		
16. Is line 8 divided by line 2 greater than 0.1?.		
17. Is line 5 divided by line 6 greater than 1.5?		

ALTERNATIVE II

1. (a) Current plugging and abandonment cost	$_____
(b) Sum of the company's financial responsibilities under 40 CFR Parts 264 and 265, Subpart H, currently met using the financial test or corporate guarantee.	
(c) Total of lines a and b.	
2. Current bond rating of most recent issuance of this firm and name of rating service.	
3. Date of issuance of bond.	
4. Date of maturity of bond.	
*5. Tangible net worth [if any portion of the plugging and abandonment cost estimate is included in ''total liabilities'' on your firm's financial statements, you may add the amount of that portion to this line].	
*6. Total assets in U.S. (required only if less than 90% of firm's assets are located in U.S.).	

	Yes	No
7. Is line 5 at least $10 million?.		
8. Is line 5 at least 6 times line 1(c)?.		
*9. Are at least 90% of the firm's assets located in the U.S.? If not, complete line 10.		
10. Is line 6 at least 6 times line 1(c)?		

I hereby certify that the wording of this letter is identical to the wording specified in

40 CFR 144.70(f) as such regulations were constituted on the date shown immediately below.

[Signature]
[Name]
[Title]
[Date]

(g) A corporate guarantee as specified in §144.63(e) must be worded as follows except that instructions in brackets are to be replaced with the relevant information and the bracketed material deleted:

GUARANTEE FOR PLUGGING AND ABANDONMENT

Guarantee made this ___ day of _____, 19____, by [name of guaranteeing entity], a business corporation organized under the laws of the State of _____, herein referred to as guarantor, to the United States Environmental Protection Agency (EPA), obligee, on behalf of our subsidiary [owner or operator] of [business address].

Recitals

1. Guarantor meets or exceeds the financial test criteria and agrees to comply with the reporting requirements for guarantors as specified in 40 CFR 144.63(e).

2. [Owner or operator] owns or operates the following Class I hazardous waste injection well covered by this guarantee: [List for each facility: EPA Identification Number, name, and address. Indicate for each whether guarantee is for closure, post-closure care, or both.]

3. ''Plugging and abandonment plan'' as used below refers to the plans maintained as required by 40 CFR part 144 for the plugging and abandonment of injection wells as identified above.

4. For value received from [owner or operator], guarantor guarantees to EPA that in the event that [owner or operator] fails to perform [''plugging and abandonment''] of the above facility(ies) in accordance with the plugging and abandonment plan and other requirements when required to do so, the guarantor will do so or fund a trust fund as specified in 40 CFR 144.63 in the name of [owner or operator] in the amount of the adjusted plugging and abandonment cost estimates prepared as specified in 40 CFR 144.62.

5. Guarantor agrees that, if at the end of any fiscal year before termination of this guarantee, the guarantor fails to meet the financial test criteria, guarantor will send within 90 days, by certified mail, notice to the EPA Regional Administrator(s) for the Region(s) in which the facility(ies) is (are) located and to [owner or operator] that he intends to provide alternate financial assurance as specified in 40 CFR 144.63 in the name of [owner or operator]. Within 30 days after sending such notice, the guarantor will establish such financial assurance if [owner or operator] has not done so.

6. The guarantor agrees to notify the Regional Administrator, by certified mail, of a voluntary or involuntary case under Title 11, U.S. Code, naming guarantor as debtor, within 10 days after its commencement.

7. Guarantor agrees that within 30 days after being notified by an EPA Regional Administrator of a determination that guarantor no longer meets the financial test criteria or that he is disallowed from continuing as a guarantor of plugging and adandonment, he will establish alternate financial assurance, as specified in 40 CFR 144.63, in the name of [owner or operator] if [owner or operator] has not done so.

8. Guarantor agrees to remain bound under this guarantee notwithstanding any or all of the following: amendment or modification of the plugging and abandonment plan, the extension or reduction of the time of performance of plugging and abandonment or any other modification or alteration of an obligation of [owner or operator] pursuant to 40 CFR part 144.

9. Guarantor agrees to remain bound under this guarantee for so long as [owner or operator] must comply with the applicable financial assurance requirements of 40 CFR part 144 for the above-listed facilities, except that guarantor may cancel this guarantee by sending notice by certified mail, to the EPA Regional Administrator(s) for the Region(s) in which the facility(ies) is (are) located and to [owner or operator], such cancellation to become effective no earlier than 120 days after actual receipt of such notice by both EPA and [owner or operator] as evidenced by the return receipts.

10. Guarantor agrees that if [owner or operator] fails to provide alternate financial assurance and obtain written approval of such assurance from the EPA Regional Administrator(s) within 90 days after a notice of cancellation by the guarantor is received by both the EPA Regional Administrator(s) and [owner or operator], guarantor will provide alternate financial assurance as specified in 40 CFR 144.63 in the name of [owner or operator].

11. Guarantor expressly waives notice of acceptance of this guarantee by the EPA or by [owner or operator]. Guarantor also expressly waives notice of amendments or modifications of the plugging and abandonment plan.

I hereby certify that the wording of this guarantee is identical to the wording specified in 40 CFR 144.70(f).

Effective date: _____.

[Name of guarantor]
[Authorized signature for guarantor]
[Type name of person signing]
[Title of person signing]

Signature of witness or notary: _____

[48 FR 14189, Apr. 1, 1983, as amended at 59 FR 29959, June 10, 1994]

Subpart G—Requirements for Owners and Operators of Class V Injection Wells

SOURCE: 64 FR 68566, Dec. 7, 1999, unless otherwise noted.

§ 144.79 General.

This subpart tells you what requirements apply if you own or operate a Class V injection well. You may also be required to follow additional requirements listed in the rest of this part. Where they may apply, these other requirements are referenced rather than repeated. The requirements described in this subpart and elsewhere in this part are to protect underground sources of drinking water and are part of the Underground Injection Control (UIC) Program established under the Safe Drinking Water Act. This subpart is written in a special format to make it easier to understand the regulatory requirements. Like other EPA regulations, it establishes enforceable legal requirements.

DEFINITION OF CLASS V INJECTION WELLS

§ 144.80 What is a Class V injection well?

As described in § 144.6, injection wells are classified as follows:

(a) *Class I.* (1) Wells used by generators of hazardous waste or owners or operators of hazardous waste management facilities to inject hazardous waste beneath the lowermost formation containing, within one-quarter mile of the well bore, an underground source of drinking water.

(2) Other industrial and municipal disposal wells which inject fluids beneath the lowermost formation containing, within one quarter mile of the well bore, an underground source of drinking water;

(3) Radioactive waste disposal wells which inject fluids below the lowermost formation containing an underground source of drinking water within one quarter mile of the well bore.

(b) *Class II.* Wells which inject fluids:

(1) Which are brought to the surface in connection with natural gas storage operations, or conventional oil or natural gas production and may be commingled with waste waters from gas plants which are an integral part of production operations, unless those waters are classified as a hazardous waste at the time of injection.

(2) For enhanced recovery of oil or natural gas; and

(3) For storage of hydrocarbons which are liquid at standard temperature and pressure.

(c) *Class III.* Wells which inject fluids for extraction of minerals including:

(1) Mining of sulfur by the Frasch process;

(2) *In situ* production of uranium or other metals; this category includes only in situ production from ore bodies which have not been conventionally mined. Solution mining of conventional mines such as stopes leaching is included in Class V.

(3) Solution mining of salts or potash.

(d) *Class IV.* (1) Wells used by generators of hazardous waste or of radioactive waste, by owners and operators of hazardous waste management facilities, or by owners or operators of radioactive waste disposal sites to dispose of hazardous waste or radioactive waste into a formation which within one quarter (¼) mile of the well contains an underground source of drinking water.

(2) Wells used by generators of hazardous waste or of radioactive waste, by owners and operators of hazardous waste management facilities, or by owners or operators of radioactive waste disposal sites to dispose of hazardous waste or radioactive waste above a formation which within one quarter (¼) mile of the well contains an underground source of drinking water.

(3) Wells used by generators of hazardous waste or owners or operators of hazardous waste management facilities to dispose of hazardous waste, which cannot be classified under paragraph (a)(1) or (d)(1) and (2) of this section (e.g., wells used to dispose of hazardous waste into or above a formation which contains an aquifer which has been exempted pursuant to 40 CFR 146.04).

(e) *Class V.* Injection wells not included in Class I, II, III, IV or VI. Typically, Class V wells are shallow wells used to place a variety of fluids directly below the land surface. However, if the fluids you place in the ground qualify as a hazardous waste under the Resource Conservation and Recovery Act (RCRA), your well is either a Class I or Class IV well, not a Class V well. Examples of Class V wells are described in § 144.81.

(f) *Class VI.* Wells used for geologic sequestration of carbon dioxide beneath the lowermost formation containing a USDW, except those wells that are experimental in nature; or, wells used for geologic sequestration of carbon dioxide that have been granted a waiver of the injection depth requirements pursuant to requirements at § 146.95 of this chapter; or, wells used for geologic sequestration of carbon dioxide that have received an expansion to the areal extent of a existing Class II enhanced oil recovery or enhanced gas recovery aquifer exemption pursuant to § 146.4 of this chapter and § 144.7(d).

[64 FR 68566, Dec. 7, 1999, as amended at 75 FR 77290, Dec. 10, 2010]

§ 144.81 Does this subpart apply to me?

This subpart applies to you if you own or operate a Class V well, for example:

(1) Air conditioning return flow wells used to return to the supply aquifer the water used for heating or cooling in a heat pump;

(2) Large capacity cesspools including multiple dwelling, community or regional cesspools, or other devices that receive sanitary wastes, containing human excreta, which have an open bottom and sometimes perforated sides. The UIC requirements do not apply to single family residential cesspools nor to non-residential cesspools which receive solely sanitary waste and have the capacity to serve fewer than 20 persons a day.

(3) Cooling water return flow wells used to inject water previously used for cooling;

(4) Drainage wells used to drain surface fluids, primarily storm runoff, into a subsurface formation;

(5) Dry wells used for the injection of wastes into a subsurface formation;

(6) Recharge wells used to replenish the water in an aquifer;

(7) Salt water intrusion barrier wells used to inject water into a fresh aquifer to prevent the intrusion of salt water into the fresh water;

(8) Sand backfill and other backfill wells used to inject a mixture of water and sand, mill tailings or other solids into mined out portions of subsurface mines whether what is injected is a radioactive waste or not.

(9) Septic system wells used to inject the waste or effluent from a multiple dwelling, business establishment, community or regional business establishment septic tank. The UIC requirements do not apply to single family residential septic system wells, nor to non-residential septic system wells which are used solely for the disposal of sanitary waste and have the capacity to serve fewer than 20 persons a day.

(10) Subsidence control wells (not used for the purpose of oil or natural gas production) used to inject fluids into a non-oil or gas producing zone to reduce or eliminate subsidence associated with the overdraft of fresh water;

(11) Injection wells associated with the recovery of geothermal energy for heating, aquaculture and production of electric power;

(12) Wells used for solution mining of conventional mines such as stopes leaching;

(13) Wells used to inject spent brine into the same formation from which it was withdrawn after extraction of halogens or their salts;

(14) Injection wells used in experimental technologies.

(15) Injection wells used for in situ recovery of lignite, coal, tar sands, and oil shale.

(16) Motor vehicle waste disposal wells that receive or have received fluids from vehicular repair or maintenance activities, such as an auto body repair shop, automotive repair shop, new and used car dealership, specialty repair shop (e.g., transmission and muffler repair shop), or any facility that does any vehicular repair work. Fluids disposed in these wells may contain organic and inorganic chemicals

in concentrations that exceed the maximum contaminant levels (MCLs) established by the primary drinking water regulations (see 40 CFR part 141). These fluids also may include waste petroleum products and may contain contaminants, such as heavy metals and volatile organic compounds, which pose risks to human health.

[64 FR 68566, Dec. 7, 1999, as amended at 67 FR 39593, June 7, 2002]

REQUIREMENTS FOR ALL CLASS V INJECTION WELLS

§ 144.82 What must I do to protect underground sources of drinking water?

If you own or operate any type of Class V well, the regulations below require that you cannot allow movement of fluid into USDWs that might cause endangerment, you must comply with other Federal UIC requirements in 40 CFR parts 144 through 147, and you must comply with any other measures required by your State or EPA Regional Office UIC Program to protect USDWs, and you must properly close your well when you are through using it. You also must submit basic information about your well, as described in § 144.83.

(a) *Prohibition of fluid movement.* (1) As described in § 144.12(a), your injection activity cannot allow the movement of fluid containing any contaminant into USDWs, if the presence of that contaminant may cause a violation of the primary drinking water standards under 40 CFR part 141, other health based standards, or may otherwise adversely affect the health of persons. This prohibition applies to your well construction, operation, maintenance, conversion, plugging, closure, or any other injection activity.

(2) If the Director of the UIC Program in your State or EPA Region learns that your injection activity may endanger USDWs, he or she may require you to close your well, require you to get a permit, or require other actions listed in § 144.12(c), (d), or (e).

(b) *Closure requirements.* You must close the well in a manner that complies with the above prohibition of fluid movement. Also, you must dispose or otherwise manage any soil, gravel, sludge, liquids, or other materials removed from or adjacent to your well in accordance with all applicable Federal, State, and local regulations and requirements.

(c) *Other requirements in Parts 144 through 147.* Beyond this subpart, you are subject to other UIC Program requirements in 40 CFR parts 144 through 147. While most of the relevant requirements are repeated or referenced in this subpart for convenience, you need to read these other parts to understand the entire UIC Program.

(d) *Other State or EPA requirements.* 40 CFR parts 144 through 147 define minimum Federal UIC requirements. EPA Regional Offices administering the UIC Program have the flexibility to establish additional or more stringent requirements based on the authorities in parts 144 through 147, if believed to be necessary to protect USDWs. States can have their own authorities to establish additional or more stringent requirements if needed to protect USDWs. You must comply with these additional requirements, if any exist in your area. Contact the UIC Program Director in your State or EPA Region to learn more.

§ 144.83 Do I need to notify anyone about my Class V injection well?

Yes, you need to provide basic ''inventory information'' about your well to the UIC Director, if you haven't already. You also need to provide any additional information that your UIC Program Director requests in accordance with the provisions of the UIC regulations.

(a) *Inventory requirements.* Unless you know you have already satisfied the inventory requirements in § 144.26 that were in effect prior to the issuance of this Subpart G, you must give your UIC Program Director certain information about yourself and your injection operation.

NOTE: This information is requested on national form ''Inventory of Injection Wells,'' OMB No. 2040–0042.

(1) The requirements differ depending on your well status and location, as described in the following table:

If your well is . . .	And you're in one of these locations (''Primacy'' States, where the State runs the Class V UIC Program): Alabama, Arkansas, Commonwealth of Northern Mariana Islands, Connecticut, Delaware, Florida, Georgia, Guam, Idaho, Illinois, Kansas, Louisiana, Maine, Maryland, Massachusetts, Mississippi, Missouri, Nebraska, Nevada, New Hampshire, New Jersey, New Mexico, North Carolina, North Dakota, Ohio, Oklahoma, Oregon, Puerto Rico, Rhode Island, South Carolina, Texas, Utah, Vermont, Washington, West Virginia, Wisconsin, or Wyoming	Or you're in one of these locations (''Direct Implementation'' or DI Programs, where EPA runs the Class V UIC Program): Alaska, American Samoa, Arizona, California, Colorado, Hawaii, Indiana, Iowa, Kentucky, Michigan, Minnesota, Montana, New York, Pennsylvania, South Dakota, Tennessee, Virginia, Virgin Islands, Washington, DC, or any Indian Country
(i) New (prior to construction of your well)	. . . then you must contact your State UIC Program to determine what you must submit and by when..	. . . then you must submit the inventory information described in (a)(2) of this section prior to constructing your well.
(ii) Existing (construction underway or completed).	. . . then you must contact your State UIC Program to determine what you must submit and by when..	. . . then you must cease injection and submit the inventory information. You may resume injection 90 days after you submit the information unless the UIC Program Director notifies you that injection may not resume or may resume sooner.

(2) If your well is in a Primacy State or a DI Program State, here is the information you must submit:

(i) No matter what type of Class V well you own or operate, you must submit at least the following information for each Class V well: facility name and location; name and address of legal contact; ownership of facility; nature and type of injection well(s); and operating status of injection well(s).

(ii) *Additional information.* If you are in a Direct Implementation State and you own or operate a well listed below you must also provide the information listed in paragraph (a) (2) (iii) as follows:

(A) Sand or other backfill wells (40 CFR 144.81(8) and 146.5(e)(8) of this chapter);

(B) Geothermal energy recovery wells (40 CFR 144.81(11) and 146.5 (e)(12) of this chapter);

(C) Brine return flow wells (40 CFR 144.81(13) and 146.5 (e)(14) of this chapter);

(D) Wells used in experimental technology (40 CFR 144.81(14) and 146.5 (e)(15) of this chapter);

(E) Municipal and industrial disposal wells other than Class I; and

(F) Any other Class V wells at the discretion of the Regional Administrator.

(iii) You must provide a list of all wells owned or operated along with the following information for each well. (A single description of wells at a single facility with substantially the same characteristics is acceptable).

(A) Location of each well or project given by Township, Range, Section, and Quarter-Section, or by latitude and longitude to the nearest second, according to the conventional practice in your State;

(B) Date of completion of each well;

(C) Identification and depth of the underground formation(s) into which each well is injecting;

(D) Total depth of each well;

(E) Construction narrative and schematic (both plan view and cross-sectional drawings);

(F) Nature of the injected fluids;

(G) Average and maximum injection pressure at the wellhead;

(H) Average and maximum injection rate; and

(I) Date of the last inspection.

(3) Regardless of whether your well is in a Primacy State or DI Program you are responsible for knowing about, understanding, and complying with these inventory requirements.

(b) *Information in response to requests.* If you are in one of the DI Programs listed in the table above, the UIC Program Director may require you to submit other information believed necessary to protect underground sources of drinking water.

(1) Such information requirements may include, but are not limited to:

(i) Perform ground water monitoring and periodically submit your monitoring results;

(ii) Analyze the fluids you inject and periodically submit the results of your analyses;

(iii) Describe the geologic layers through which and into which you are injecting; and

(iv) Conduct other analyses and submit other information, if needed to protect underground sources of drinking water.

(2) If the Director requires this other information, he or she will request it from you in writing, along with a brief statement on why the information is required. This written notification also will tell you when to submit the information.

(3) You are prohibited from using your injection well if you fail to comply with the written request within the time frame specified. You can start injecting again only if you receive a permit.

§ 144.84 Do I need to get a permit?

No, unless you fall within an exception described below:

(a) *General authorization by rule.* With certain exceptions listed in paragraph (b) of this section, your Class V injection activity is ''authorized by rule,'' meaning you have to comply with all the requirements of this subpart and the rest of the UIC Program but you don't have to get an individual permit. Well authorization expires once you have properly closed your well, as described in § 144.82(b).

(b) *Circumstances in which permits or other actions are required.* If you fit into one of the categories listed below, your Class V well is no longer authorized by rule. This means that you have to either get a permit or close your injection well. You can find out by contacting the UIC Program Director in your State or EPA Region if this is the case. Subpart D of this part tells you how to apply for a permit and describes other aspects of the permitting process. Subpart E of this part outlines some of the requirements that apply to you if you get a permit.

(1) You fail to comply with the prohibition of fluid movement standard in § 144.12(a) and described in § 144.82(a) (in which case, you have to get a permit, close your well, and/or comply with other conditions determined by the UIC Program Director in your State or EPA Region);

(2) You own or operate a Class V large-capacity cesspool (in which case, you must close your well as specified in the additional requirements below) or a Class V motor vehicle waste disposal well in a ground water protection area or sensitive ground water area (in which case, you must either close your well or get a permit as specified in the additional requirements in this subsection). New motor vehicle waste disposal wells and new cesspools are prohibited as of April 5, 2000;

(3) You are specifically required by the UIC Program Director in your State or EPA Region to get a permit (in which case, rule authorization expires upon the effective date of the permit issued, or you are prohibited from injecting into your well upon:

(i) Failure to submit a permit application in a timely manner as specified in a notice from the Director; or

(ii) Upon the effective date of permit denial);

(4) You have failed to submit inventory information to your UIC Program Director, as described in § 144.83(a) (in which case, you are prohibited from injecting into your well until you comply with the inventory requirements); or

(5) If you are in a DI State and you received a request from your UIC Program Director for additional information under § 144.83(b), and have failed to comply with the request in a timely manner (in which case, you are prohibited from injecting into your well until you get a permit).

ADDITIONAL REQUIREMENTS FOR CLASS V LARGE-CAPACITY CESSPOOLS AND MOTOR VEHICLE WASTE DISPOSAL WELLS

§ 144.85 Do these additional requirements apply to me?

(a) *Large-capacity cesspools.* The additional requirements apply to all new and existing large-capacity cesspools regardless of their location. If you are using a septic system for these type of wastes you are not subject to the additional requirements in this subpart.

(b) *Motor vehicle waste disposal wells existing on April 5, 2000.* If you have a Class V motor vehicle waste disposal well these requirements apply to you if your well is located in a ground water protection area or other sensitive ground water area that is identified by your State or EPA Region. If your State or EPA Region fails to identify ground water protection areas and/or other sensitive ground water areas these requirements apply to all Class V motor vehicle wells in the State.

(c) *New motor vehicle waste disposal wells.* The additional requirements apply to all new motor vehicle waste disposal wells as of April 5, 2000.

§ 144.86 What are the definitions I need to know?

(a) *State Drinking Water Source Assessment and Protection Program.* This is a new approach to protecting drinking water sources, specified in the 1996 Amendments to the Safe Drinking Water Act at Section 1453. States must prepare and submit for EPA approval a program that sets out how States will conduct local assessments, including: delineating the boundaries of areas providing source waters for public water systems; identifying significant potential sources of contaminants in such areas; and determining the susceptibility of public water systems in the delineated areas to the inventoried sources of contamination.

(b) *Complete local source water assessment for ground water protection areas.* When EPA has approved a State's Drinking Water Source Assessment and Protection Program, States will begin to conduct local assessments for each public water system in their State. For the purposes of this rule, local assessments for community water systems and non-transient non-community systems are complete when four requirements are met: First, a State must delineate the boundaries of the assessment area for community and non-transient non-community water systems. Second, the State must identify significant potential sources of contamination in these delineated areas. Third, the State must ''determine the susceptibility of community and non-transient non-community water systems in the delineated area to such contaminants.'' Lastly, each State will develop its own plan for making the completed assessments available to the public.

(c) *Ground water protection area.* A ground water protection area is a geographic area near and/or surrounding community and non-transient non-community water systems that use ground water as a source of drinking water. These areas receive priority for the protection of drinking water supplies and States are required to delineate and assess these areas under section 1453 of the Safe Drinking Water Act. The additional requirements in § 144.88 apply to you if your Class V motor vehicle waste disposal well is in a ground water protection area for either a community water system or a non-transient non-community water system, in many States, these areas will be the same as Wellhead Protection Areas that have been or will be delineated as defined in section 1428 of the SDWA.

(d) *Community water system.* A community water system is a public water system that serves at least 15 service connections used by year-round residents or regularly serves at least 25 year-round residents.

(e) *Non-transient non-community water system.* A public water system that is not a community water system and that regularly serves at least 25 of the same people over six months a year. These may include systems that provide water to schools, day care centers, government/military installations, manufacturers, hospitals or nursing homes, office buildings, and other facilities.

(f) *Delineation.* Once a State's Drinking Water Source Assessment and Protection Program is approved, the States will begin delineating their local assessment areas. Delineation is the first step in the assessment process in which the boundaries of ground water protection areas are identified.

(g) *Other sensitive ground water areas.* States may also identify other areas in the State in addition to ground water protection areas that are critical to protecting underground sources of drinking water from contamination. These other sensitive ground water areas may include areas such as areas

overlying sole-source aquifers; highly productive aquifers supplying private wells; continuous and highly productive aquifers at points distant from public water supply wells; areas where water supply aquifers are recharged; karst aquifers that discharge to surface reservoirs serving as public water supplies; vulnerable or sensitive hydrogeologic settings, such as glacial outwash deposits, eolian sands, and fractured volcanic rock; and areas of special concern selected based on a combination of factors, such as hydrogeologic sensitivity, depth to ground water, significance as a drinking water source, and prevailing land-use practices.

§ 144.87 How does the identification of ground water protection areas and other sensitive ground water areas affect me?

(a) You are subject to these new requirements if you own or operate an existing motor vehicle well and you are located in a ground water protection area or an other sensitive ground water area. If your State or EPA Region fails to identify these areas within the specified time frames these requirements apply to all existing motor vehicle waste disposal wells within your State.

(b) *Ground water protection areas.* (1) For the purpose of this subpart, States are required to complete all local source water assessments for ground water protection areas by January 1, 2004. Once a local assessment for a ground water protection area is complete every existing motor vehicle waste disposal well owner in that ground water protection area has one year to close the well or receive a permit. If a State fails to complete all local assessments for ground water protection areas by January 1, 2004, the following may occur:

(i) The new requirements in this subpart will apply to all existing motor vehicle waste disposal wells in the State and owners and operators of motor vehicle waste disposal wells located outside of completed assessments for ground water protection areas must close their well or receive a permit by January 1, 2005.

(ii) EPA may grant a State an extension for up to one year from the January 1, 2004 deadline if the State is making reasonable progress in completing the source water assessments for ground water protection areas. States must apply for the extension by June 1, 2003. If a State fails to complete the assessments for the remaining ground water protection areas by the extended date the rule requirements will apply to all motor vehicle waste disposal wells in the State and owners and operators of motor vehicle waste disposal wells located outside of ground water protection areas with completed assessments must close their well or receive a permit by January 1, 2006.

(2) The UIC Program Director may extend the compliance deadline for specific motor vehicle waste disposal wells for up to one year if the most efficient compliance option for the well is connection to a sanitary sewer or installation of new treatment technology.

(c) *Other sensitive ground water areas.* States may also delineate other sensitive ground water areas by January 1, 2004. Existing motor vehicle waste disposal well owners and operators within other sensitive ground water areas have until January 1, 2007 to receive a permit or close the well. If a State or EPA Region fails to identify these additional sensitive ground water areas by January 1, 2004, the new requirements of this rule will apply to all motor vehicle waste disposal wells in the State effective January 1, 2007 unless they are subject to a different compliance date pursuant to paragraph (b) of this section. Again, EPA may extend the January 1, 2004 deadline for up to one year for States to delineate other sensitive ground water areas if the State is making reasonable progress in identifying the sensitive areas. States must apply for this extension by June 1, 2003. If a State has been granted an extension, existing motor vehicle waste disposal well owners and operators within the sensitive ground water areas have until January 1, 2008 to close the well or receive a permit, unless they are subject to a different compliance date pursuant to paragraph (b) of this section. If a State has been granted an extension and fails to delineate sensitive areas by the extended date, the rule requirements will apply to all motor vehicle waste disposal

wells in the State and owners and operators have until January 1, 2008 to close the well or receive a permit, unless they are subject to a different compliance date pursuant to paragraph (b) of this section.

(d) *How to find out if your well is in a ground water protection area or sensitive ground water area.* States are required to make their local source water assessments widely available to the public through a variety of methods after the assessments are complete. You can find out if your Class V well is in a ground water protection area by contacting the State agency responsible for the State Drinking Water Source Assessment and Protection Program in your area. You may call the Safe Drinking Water Hotline at 1–800–426–4791 to find out who to call in your State for this information. The State office responsible for implementing the Drinking Water Source Assessment and Protection Program makes the final and official determination of boundaries for ground water protection areas. Because States that choose to delineate other sensitive ground water areas are also required to make the information on these areas accessible to the public, they may do so in a manner similar to the process used by the States in publicizing the EPA approved Drinking Water Source Assessment and Protection Program. You can find out if your Class V well is in an other sensitive ground water area by contacting the State or Federal agency responsible for the Underground Injection Control Program. You may call the Safe Drinking Water Hotline at 1–800–426–4791 to find out who to call for information.

(e) *Changes in the status of the EPA approved state drinking water source assessment and protection program.* After January 1, 2004 your State may assess a ground water protection area for ground water supplying a new community water system or a new non-transient non-community water system that includes your Class V injection well. Also, your State may officially re-delineate the boundaries of a previously delineated ground water protection area to include additional areas that includes your motor vehicle waste disposal well. This would make the additional regulations apply to you if your motor vehicle waste disposal well is in such an area. The additional regulations start applying to you one year after the State completes the local assessment for the ground water protection area for the new drinking water system or the new re-delineated area. The UIC Program Director responsible for your area may extend this deadline for up to one year if the most efficient compliance option for the well is connection to a sanitary sewer or installation of new treatment technology.

(f) *What happens if my state doesn't designate other sensitive ground water areas?* If your State or EPA Region elects not to delineate the additional sensitive ground water areas, the additional regulations apply to you regardless of the location of your well by January 1, 2007, or January 2008 if an extension has been granted as explained in paragraph (c) of this section, except for wells in ground water protection areas which are subject to different compliance deadlines explained in paragraph (b) of this section.

(g) [Reserved]

(h) *Application of requirements outside of ground water protection areas and sensitive ground water areas.* EPA expects and strongly encourages States to use existing authorities in the UIC program to take whatever measures are needed to ensure Class V wells are not endangering USDWs in any other areas outside of delineated ground water protection areas and sensitive ground water areas. Such measures could include, if believed to be necessary by a UIC Program Director, applying the additional requirements below to other areas and/or other types of Class V wells. Therefore, the Director may apply the additional requirements to you, even if you are not located in the areas listed in paragraph (a) of this section.

§ 144.88 What are the additional requirements?

The additional requirements are specified in the following tables:

(a) TABLE 1—ADDITIONAL REQUIREMENTS FOR LARGE-CAPACITY CESSPOOLS STATEWIDE

[See § 144.85 to determine if these additional requirements apply to you]

Well Status	Requirement	Deadline
If your cesspool is. . .	Then you. . .	By. . .
(1) Existing (operational or under construction by April 5, 2000).	(i) Must close the well	April 5, 2005.
	(ii) Must notify the UIC Program Director (both Primacy States and Direct Implementation States) of your intent to close the well.. Note: This information is requested on national form ''Preclosure Notification for Closure of Injection Wells,''.	At least 30 days prior to closure.
(2) New or converted (construction not started before April 5, 2000).	Are prohibited	April 5, 2000.

(b) TABLE 2—ADDITIONAL REQUIREMENTS FOR MOTOR VEHICLE WASTE DISPOSAL WELLS

[See § 144.85 to determine if these additional requirements apply to you]

Well status	Requirement	Deadline
If your motor vehicle waste disposal well is	Then. . .	By. . .
(1) Existing (operational or under construction by April 5, 2000).	(i) If your well is in a ground water protection area, you must close the well or obtain a permit.	Within 1 year of the completion of your local source water assessment; your UIC Program Director may extend the closure deadline, but not the permit application deadline, for up to one year if the most efficient compliance option is connection to a sanitary sewer or installation of new treatment technology.
	(ii) If your well is in an other sensitive ground water area, you must close the well or obtain a permit.	By January 1, 2007; your UIC Program Director may extend the closure deadline, but not the permit application deadline, for up to one year if the most efficient compliance option is connection to a sanitary sewer or installation of new treatment technology.
	(iii) If you plan to seek a waiver from the ban and apply for a permit, you must meet MCLs at the point of injection while your permit application is under review, if you choose to keep operating your well.	The date you submit your permit application.
	(iv) If you receive a permit, you must comply with all permit conditions, if you choose to keep operating your well, including requirements to meet MCLs and other health based standards at the point of injection, follow best management practices, and monitor your injectate and sludge quality.	The date(s) specified in your permit.
	(v) If your well is in a State which has not completed all their local assessments by January 1, 2004 or by the extended date if your State has obtained an extension as described in 144.87, and you are outside an area with a completed assessment you must close the well or obtain a permit.	January 1, 2005 unless your State obtains an extension as described in 144.87 (b) in which case your deadline is January 1, 2006; your UIC Program Director may extend the closure deadline, but not the permit application deadline, for up to one year if the most efficient compliance option is connection to a sanitary sewer or installation of new treatment technology.

(b) TABLE 2—ADDITIONAL REQUIREMENTS FOR MOTOR VEHICLE WASTE DISPOSAL WELLS—Continued

[See § 144.85 to determine if these additional requirements apply to you]

Well status	Requirement	Deadline
If your motor vehicle waste disposal well is	Then. . .	By. . .
	(vi) If your well is in a State that has not delineated other sensitive ground water areas by January 1, 2004 and you are outside of an area with a completed assessment you must close the well or obtain a permit regardless of your location.	January 1, 2007 unless your State obtains an extension as described in 144.87(c) in which case your deadline is January 2008.
	(vii) If you plan to close your well, you must notify the UIC Program Director of your intent to close the well (this includes closing your well prior to conversion). Note: This information is requested on national form "Preclosure Notification for Closure of Injection Wells"..	At least 30 days prior to closure.
(2) New or converted (construction not started before April 5, 2000).	Are prohibited	April 5, 2000.

[64 FR 68566, Dec. 7, 1999; 64 FR 70316, Dec. 16, 1999]

§ 144.89 How do I close my Class V injection well?

The following describes the requirements for closing your Class V injection well.

(a) *Closure.* (1) Prior to closing a Class V large-capacity cesspool or motor vehicle waste disposal well, you must plug or otherwise close the well in a manner that complies with the prohibition of fluid movement standard in § 144.12 and summarized in § 144.82(a). If the UIC Program Director in your State or EPA Region has any additional or more specific closure standards, you have to meet those standards too. You also must dispose or otherwise manage any soil, gravel, sludge, liquids, or other materials removed from or adjacent to your well in accordance with all applicable Federal, State, and local regulations and requirements, as in § 144.82(b).

(2) Closure does not mean that you need to cease operations at your facility, only that you need to close your well. A number of alternatives are available for disposing of waste fluids. Examples of alternatives that may be available to motor vehicle stations include: recycling and reusing wastewater as much as possible; collecting and recycling petroleum-based fluids, coolants, and battery acids drained from vehicles; washing parts in a self-contained, recirculating solvent sink, with spent solvents being recovered and replaced by the supplier; using absorbents to clean up minor leaks and spills, and placing the used materials in approved waste containers and disposing of them properly; using a wet vacuum or mop to pick up accumulated rain or snow melt, and if allowed, connecting floor drains to a municipal sewer system or holding tank, and if allowed, disposing of the holding tank contents through a publicly owned treatment works. You should check with the publicly owned treatment works you might use to see if they would accept your wastes. Alternatives that may be available to owners and operators of a large-capacity cesspool include: conversion to a septic system; connection to sewer; and installation of an on-site treatment unit.

(b) *Conversions.* In limited cases, the UIC Director may authorize the conversion (reclassification) of a motor vehicle waste disposal well to another type of Class V well. Motor vehicle wells may only be converted if: all motor vehicle fluids are segregated by

physical barriers and are not allowed to enter the well; and, injection of motor vehicle waste is unlikely based on a facility's compliance history and records showing proper waste disposal. The use of a semi-permanent plug as the means to segregate waste is not sufficient to convert a motor vehicle waste disposal well to another type of Class V well.

[64 FR 68566, Dec. 7, 1999; 65 FR 5024, Feb. 2, 2000]

PART 145—STATE UIC PROGRAM REQUIREMENTS

Subpart A—General Program Requirements

Sec.
145.1 Purpose and scope.
145.2 Definitions.

Subpart B—Requirements for State Programs

145.11 Requirements for permitting.
145.12 Requirements for compliance evaluation programs.
145.13 Requirements for enforcement authority.
145.14 Sharing of information.

Subpart C—State Program Submissions

145.21 General requirements for program approvals.
145.22 Elements of a program submission.
145.23 Program description.
145.24 Attorney General's statement.
145.25 Memorandum of Agreement with the Regional Administrator.

Subpart D—Program Approval, Revision and Withdrawal

145.31 Approval process.
145.32 Procedures for revision of State programs.
145.33 Criteria for withdrawal of State programs.
145.34 Procedures for withdrawal of State programs.

Subpart E—Indian Tribes

145.52 Requirements for Tribal eligibility.
145.56 Request by an Indian Tribe for a determination of eligibility.
145.58 Procedure for processing an Indian Tribe's application.

AUTHORITY: 42 U.S.C. 300f *et seq.*

SOURCE: 48 FR 14202, Apr. 1, 1983, unless otherwise noted.

Subpart A—General Program Requirements

§ 145.1 Purpose and scope.

(a) This part specifies the procedures EPA will follow in approving, revising, and withdrawing State programs under section 1422 (underground injection control—UIC) of SDWA, and includes the elements which must be part of submissions to EPA for program approval and the substantive provisions which must be present in State programs for them to be approved.

(b) State submissions for program approval must be made in accordance with the procedures set out in subpart C. This includes developing and submitting to EPA a program description (§ 145.23), an Attorney General's Statement (§ 145.24), and a Memorandum of Agreement with the Regional Administrator (§ 145.25).

(c) The substantive provisions which must be included in State programs to obtain approval include requirements for permitting, compliance evaluation, enforcement, public participation, and sharing of information. The requirements are found in subpart B. Many of the requirements for State programs are made applicable to States by cross-referencing other EPA regulations. In particular, many of the provisions of parts 144 and 124 are made applicable to States by the references contained in § 145.11.

(d) Upon submission of a complete program, EPA will conduct a public hearing, if interest is shown, and determine whether to approve or disapprove the program taking into consideration the requirements of this part, the Safe Drinking Water Act and any comments received.

(e) Upon approval of a State program, the Administrator shall suspend the issuance of Federal permits for those activities subject to the approved State program.

(f) Any State program approved by the Administrator shall at all times be conducted in accordance with the requirements of this part.

(g) Nothing in this part precludes a State from:

(1) Adopting or enforcing requirements which are more stringent or

more extensive than those required under this part;

(2) Operating a program with a greater scope of coverage than that required under this part. Where an approved State program has a greater scope of coverage than required by Federal law the additional coverage is not part of the federally approved program.

(h) Section 1451 of the SDWA authorizes the Administrator to delegate primary enforcement responsibility for the Underground Injection Control Program to eligible Indian Tribes. An Indian Tribe must establish its eligibility to be treated as a State before it is eligible to apply for Underground Injection Control grants and primary enforcement responsibility. All requirements of parts 124, 144, 145, and 146 that apply to States with UIC primary enforcement responsibility also apply to Indian Tribes except where specifically noted.

(i) States seeking primary enforcement responsibility for Class VI wells must submit a primacy application in accordance with subpart C of this part and meet all requirements of this part. States may apply for primary enforcement responsibility for Class VI wells independently of other injection well classes.

[48 FR 14202, Apr. 1, 1983, as amended at 53 FR 37412, Sept. 26, 1988; 59 FR 64345, Dec. 14, 1994; 75 FR 77290, Dec. 10, 2010]

§ 145.2 Definitions.

The definitions of part 144 apply to all subparts of this part.

Subpart B—Requirements for State Programs

§ 145.11 Requirements for permitting.

(a) All State programs under this part must have legal authority to implement each of the following provisions and must be administered in conformance with each; except that States are not precluded from omitting or modifying any provisions to impose more stringent requirements.

(1) Section 144.5(b)–(Confidential information);

(2) Section 144.6—(Classification of injection wells);

(3) Section 144.7—(Identification of underground sources of drinking water and exempted aquifers);

(4) Section 144.8—(Noncompliance reporting);

(5) Section 144.11—(Prohibition of unauthorized injection);

(6) Section 144.12—(Prohibition of movement of fluids into underground sources of drinking water);

(7) Section 144.13—(Elimination of Class IV wells);

(8) Section 144.14—(Requirements for wells managing hazardous waste);

(9) Sections 144.21–144.26—(Authorization by rule);

(10) Section 144.31—(Application for a permit);

(11) Section 144.32—(Signatories);

(12) Section 144.33—(Area Permits);

(13) Section 144.34—(Emergency permits);

(14) Section 144.35—(Effect of permit);

(15) Section 144.36—(Duration);

(16) Section 144.38—(Permit transfer);

(17) Section 144.39—(Permit modification);

(18) Section 144.40—(Permit termination);

(19) Section 144.51—(Applicable permit conditions);

(20) Section 144.52—(Establishing permit conditions);

(21) Section 144.53(a)—(Schedule of compliance);

(22) Section 144.54—(Monitoring requirements);

(23) Section 144.55—(Corrective Action);

(24) Section 124.3(a)—(Application for a permit);

(25) Section 124.5 (a), (c), (d), and (f)—(Modification of permits);

(26) Section 124.6 (a), (c), (d), and (e)—(Draft Permit);

(27) Section 124.8—(Fact sheets);

(28) Section 124.10 (a)(1)(ii), (a)(1)(iii), (a)(1)(v), (b), (c), (d), and (e)—(Public notice);

(29) Section 124.11—(Public comments and requests for hearings);

(30) Section 124.12(a)—(Public hearings);

(31) Section 124.17 (a) and (c)—(Response to comments);

(32) Section 144.88—(What are the additional requirements?); and

(33) For states that wish to receive electronic documents, 40 CFR part 3—(Electronic reporting).

(b)(1) States need not implement provisions identical to the provisions listed in paragraphs (a)(1) through (a)(32) of this section. Implemented provisions must, however, establish requirements at least as stringent as the corresponding listed provisions. While States may impose more stringent requirements, they may not make one requirement more lenient as a tradeoff for making another requirement more stringent; for example, by requiring that public hearings be held prior to issuing any permit while reducing the amount of advance notice of such a hearing.

(2) State programs may, if they have adequate legal authority, implement any of the provisions of parts 144 and 124. See, for example §144.37(d) (continuation of permits) and §124.4 (consolidation of permit processing).

[48 FR 14202, Apr. 1, 1983, as amended at 64 FR 78572, Dec. 7, 1999; 70 FR 59888, Oct. 13, 2005]

§145.12 Requirements for compliance evaluation programs.

(a) State programs shall have procedures for receipt, evaluation, retention and investigation for possible enforcement of all notices and reports required of permittees and other regulated persons (and for investigation for possible enforcement of failure to submit these notices and reports).

(b) State programs shall have inspection and surveillance procedures to determine, independent of information supplied by regulated persons, compliance or noncompliance with applicable program requirements. The State shall maintain:

(1) A program which is capable of making comprehensive surveys of all facilities and activities subject to the State Director's authority to identify persons subject to regulation who have failed to comply with permit application or other program requirements. Any compilation, index, or inventory of such facilities and activities shall be made available to the Regional Administrator upon request;

(2) A program for periodic inspections of the facilities and activities subject to regulation. These inspections shall be conducted in a manner designed to:

(i) Determine compliance or noncompliance with issued permit conditions and other program requirements;

(ii) Verify the accuracy of information submitted by permittees and other regulated persons in reporting forms and other forms supplying monitoring data; and

(iii) Verify the adequacy of sampling, monitoring, and other methods used by permittees and other regulated persons to develop that information;

(3) A program for investigating information obtained regarding violations of applicable program and permit requirements; and

(4) Procedures for receiving and ensuring proper consideration of information submitted by the public about violations. Public effort in reporting violations shall be encouraged and the State Director shall make available information on reporting procedures.

(c) The State Director and State officers engaged in compliance evaluation shall have authority to enter any site or premises subject to regulation or in which records relevant to program operation are kept in order to copy any records, inspect, monitor or otherwise investigate compliance with permit conditions and other program requirements. States whose law requires a search warrant before entry conform with this requirement.

(d) Investigatory inspections shall be conducted, samples shall be taken and other information shall be gathered in a manner [e.g., using proper ''chain of custody'' procedures] that will produce evidence admissible in an enforcement proceeding or in court.

§145.13 Requirements for enforcement authority.

(a) Any State agency administering a program shall have available the following remedies for violations of State program requirements:

(1) To restrain immediately and effectively any person by order or by suit in State court from engaging in any unauthorized activity which is endangering or causing damage to public health or environment;

NOTE: This paragraph requires that States have a mechanism (e.g., an administrative

cease and desist order or the ability to seek a temporary restraining order) to stop any unauthorized activity endangering public health or the environment.

(2) To sue in courts of competent jurisdiction to enjoin any threatened or continuing violation of any program requirement, including permit conditions, without the necessity of a prior revocation of the permit;

(3) To assess or sue to recover in court civil penalties and to seek criminal remedies, including fines, as follows:

(i) For all wells except Class II wells, civil penalties shall be recoverable for any program violation in at least the amount of $2,500 per day. For Class II wells, civil penalties shall be recoverable for any program violation in at least the amount of $1,000 per day.

(ii) Criminal fines shall be recoverable in at least the amount of $5,000 per day against any person who willfully violates any program requirement, or for Class II wells, pipeline (production) severance shall be imposable against any person who willfully violates any program requirement.

NOTE: In many States the State Director will be represented in State courts by the State Attorney General or other appropriate legal officer. Although the State Director need not appear in court actions he or she should have power to request that any of the above actions be brought.

(b)(1) The maximum civil penalty or criminal fine (as provided in paragraph (a)(3) of this section) shall be assessable for each instance of violation and, if the violation is continuous, shall be assessable up to the maximum amount for each day of violation.

(2) The burden of proof and degree of knowledge or intent required under State law for establishing violations under paragraph (a)(3) of this section, shall be no greater than the burden of proof or degree of knowledge or intent EPA must provide when it brings an action under the Safe Drinking Water Act.

NOTE: For example, this requirement is not met if State law includes mental state as an element of proof for civil violations.

(c) A civil penalty assessed, sought, or agreed upon by the State Director under paragraph (a)(3) of this section shall be appropriate to the violation.

NOTE: To the extent that State judgments or settlements provide penalties in amounts which EPA believes to be substantially inadequate in comparison to the amounts which EPA would require under similar facts, EPA, when authorized by the applicable statute, may commence separate actions for penalties.

In addition to the requirements of this paragraph, the State may have other enforcement remedies. The following enforcement options, while not mandatory, are highly recommended:

Procedures for assessment by the State of the costs of investigations, inspections, or monitoring surveys which lead to the establishment of violations;

Procedures which enable the State to assess or to sue any persons responsible for unauthorized activities for any expenses incurred by the State in removing, correcting, or terminating any adverse effects upon human health and the environment resulting from the unauthorized activity, or both; and

Procedures for the administrative assessment of penalties by the Director.

(d) Any State administering a program shall provide for public participation in the State enforcement process by providing either:

(1) Authority which allows intervention as of right in any civil or administrative action to obtain remedies specified in paragraph (a) (1), (2) or (3) of this section by any citizen having an interest which is or may be adversely affected; or

(2) Assurance that the State agency or enforcement authority will:

(i) Investigate and provide written responses to all citizen complaints submitted pursuant to the procedures specified in § 145.12(b)(4);

(ii) Not oppose intervention by any citizen when permissive intervention may be authorized by statute, rule, or regulation; and

(iii) Publish notice of and provide at least 30 days for public comment on any proposed settlement of a State enforcement action.

(e) To the extent that an Indian Tribe does not assert or is precluded from asserting criminal enforcement authority the Administrator will assume primary enforcement responsibility for criminal violations. The Memorandum of Agreement in § 145.25 shall reflect a system where the Tribal agency will refer such violations to the

Administrator in an appropriate and timely manner.

(Clean Water Act (33 U.S.C. 1251 *et seq.*), Safe Drinking Water Act (42 U.S.C. 300f *et seq.*), Clean Air Act (42 U.S.C. 7401 *et seq.*), Resource Conservation and Recovery Act (42 U.S.C. 6901 *et seq.*))

[48 FR 14202, Apr. 1, 1983, as amended at 48 FR 39621, Sept. 1, 1983; 53 FR 37412, Sept. 26, 1988]

§ 145.14 Sharing of information.

(a) Any information obtained or used in the administration of a State program shall be available to EPA upon request without restriction. If the information has been submitted to the State under a claim of confidentiality, the State must submit that claim to EPA when providing information under this section. Any information obtained from a State and subject to a claim of confidentiality will be treated in accordance with the regulations in 40 CFR part 2. If EPA obtains from a State information that is not claimed to be confidential, EPA may make that information available to the public without further notice.

(b) EPA shall furnish to States with approved programs the information in its files not submitted under a claim of confidentiality which the State needs to implement its approved program. EPA shall furnish to States with approved programs information submitted to EPA under a claim of confidentiality, which the State needs to implement its approved program, subject to the conditions in 40 CFR part 2.

Subpart C—State Program Submissions

§ 145.21 General requirements for program approvals.

(a) States shall submit to the Administrator a proposed State UIC program complying with § 145.22 of this part within 270 days of the date of promulgation of the UIC regulations on June 24, 1980. The administrator may, for good cause, extend the date for submission of a proposed State UIC program for up to an additional 270 days.

(b) States shall submit to the Administrator 6 months after the date of promulgation of the UIC regulations a report describing the State's progress in developing a UIC program. If the Administrator extends the time for submission of a UIC program an additional 270 days, pursuant to § 145.21(a), the State shall submit a second report six months after the first report is due. The Administrator may prescribe the manner and form of the report.

(c) The requirements of § 145.21 (a) and (b) shall not apply to Indian Tribes.

(d) EPA will establish a UIC program in any State which does not comply with paragraph (a) of this section. EPA will continue to operate a UIC program in such a State until the State receives approval of a UIC program in accordance with the requirements of this part.

NOTE: States which are authorized to administer the NPDES permit program under section 402 of CWA are encouraged to rely on existing statutory authority, to the extent possible, in developing a State UIC program. Section 402(b)(1)(D) of CWA requires that NPDES States have the authority "to issue permits which control the disposal of pollutants into wells." In many instances, therefore, NPDES States will have existing statutory authority to regulate well disposal which satisfies the requirements of the UIC program. Note, however, that CWA excludes certain types of well injections from the definition of "pollutant." If the State's statutory authority contains a similar exclusion it may need to be modified to qualify for UIC program approval.

(e) If a State can demonstrate to EPA's satisfaction that there are no underground injections within the State for one or more classes of injection wells (other than Class IV wells) subject to SDWA and that such injections cannot legally occur in the State until the State has developed an approved program for those classes of injections, the State need not submit a program to regulate those injections and a partial program may be approved. The demonstration of legal prohibition shall be made by either explicitly banning new injections of the class not covered by the State program or providing a certification from the State Attorney General that such new injections cannot legally occur until the State has developed an approved program for that class. The State shall submit a program to regulate both those classes of injections for which a

demonstration is not made and class IV wells.

(f) When a State UIC program is fully approved by EPA to regulate all classes of injections, the State assumes primary enforcement authority under section 1422(b)(3) of SDWA. EPA retains primary enforcement responsibility whenever the State program is disapproved in whole or in part. States which have partially approved programs have authority to enforce any violation of the approved portion of their program. EPA retains authority to enforce violations of State underground injection control programs, except that, when a State has a fully approved program, EPA will not take enforcement actions without providing prior notice to the State and otherwise complying with section 1423 of SDWA.

(g) A State can assume primary enforcement responsibility for the UIC program, notwithstanding §145.21(3), when the State program is unable to regulate activities on Indian lands within the State. EPA will administer the program on Indian lands if the State does not seek this authority.

(h) To establish a Federal UIC Class VI program in States not seeking full UIC primary enforcement responsibility approval, pursuant to the SDWA section 1422(c), States shall, by September 6, 2011, submit to the Administrator a new or revised State UIC program complying with §§145.22 or 145.32 of this part. Beginning on September 6, 2011 the requirements of subpart H of part 146 of this chapter will be applicable and enforceable by EPA in each State that has not received approval of a new Class VI program application under section 1422 of the Safe Drinking Water Act or a revision of its UIC program under section 1422 of the Safe Drinking Water Act to incorporate subpart H of part 146. Following September 6, 2011, EPA will publish a list of the States where subpart H of part 146 has become applicable.

[48 FR 14202, Apr. 1, 1983, as amended at 53 FR 37412, Sept. 26, 1988; 75 FR 77290, Dec. 10, 2010]

§145.22 Elements of a program submission.

(a) Any State that seeks to administer a program under this part shall submit to the Administrator at least three copies of a program submission. For Class VI programs, the entire submission can be sent electronically. The submission shall contain the following:

(1) A letter from the Governor of the State requesting program approval;

(2) A complete program description, as required by §145.23, describing how the State intends to carry out its responsibilities under this part;

(3) An Attorney General's statement as required by §145.24;

(4) A Memorandum of Agreement with the Regional Administrator as required by §145.25;

(5) Copies of all applicable State statutes and regulations, including those governing State administrative procedures;

(6) The showing required by §145.31(b) of the State's public participation activities prior to program submission.

(b) Within 30 days of receipt by EPA of a State program submission, EPA will notify the State whether its submission is complete. If EPA finds that a State's submission is complete, the statutory review period (*i.e.*, the period of time allotted for formal EPA review of a proposed State program under the Safe Drinking Water Act) shall be deemed to have begun on the date of receipt of the State's submission. If EPA finds that a State's submission is incomplete, the statutory review period shall not begin until all the necessary information is received by EPA.

(c) If the State's submission is materially changed during the statutory review period, the statutory review period shall begin again upon receipt of the revised submission.

(d) The State and EPA may extend the statutory review period by agreement.

[48 FR 14202, Apr. 1, 1983, as amended at 75 FR 77290, Dec. 10, 2010]

§145.23 Program description.

Any State that seeks to administer a program under this part shall submit a description of the program it proposes to administer in lieu of the Federal program under State law or under an interstate compact. For Class VI programs, the entire submission can be sent electronically. The program description shall include:

(a) A description in narrative form of the scope, structure, coverage and processes of the State program.

(b) A description (including organization charts) of the organization and structure of the State agency or agencies which will have responsibility for administering the program, including the information listed below. If more than one agency is responsible for administration of a program, each agency must have statewide jurisdiction over a class of activities. The responsibilities of each agency must be delineated, their procedures for coordination set forth, and an agency may be designated as a ''lead agency'' to facilitate communications between EPA and the State agencies having program responsibility. When the State proposes to administer a program of greater scope of coverage than is required by Federal law, the information provided under this paragraph shall indicate the resources dedicated to administering the Federally required portion of the program.

(1) A description of the State agency staff who will carry out the State program, including the number, occupations, and general duties of the employees. The State need not submit complete job descriptions for every employee carrying out the State program.

(2) An itemization of the estimated costs of establishing and administering the program for the first two years after approval, including cost of the personnel listed in paragraph (b)(1) of this section, cost of administrative support, and cost of technical support.

(3) An itemization of the sources and amounts of funding, including an estimate of Federal grant money, available to the State Director for the first two years after approval to meet the costs listed in paragraph (b)(2) of this section, identifying any restrictions or limitations upon this funding.

(c) A description of applicable State procedures, including permitting procedures and any State administrative or judicial review procedures.

(d) Copies of the permit form(s), application form(s), reporting form(s), and manifest format the State intends to employ in its program. Forms used by States need not be identical to the forms used by EPA but should require the same basic information. The State need not provide copies of uniform national forms it intends to use but should note its intention to use such forms. For Class VI programs, submit copies of the current forms in use by the State, if any.

(e) A complete description of the State's compliance tracking and enforcement program.

(f) A State UIC program description shall also include:

(1) A schedule for issuing permits within five years after program approval to all injection wells within the State which are required to have permits under this part and 40 CFR part 144. For Class VI programs, a schedule for issuing permits within two years after program approval;

(2) The priorities (according to criteria set forth in §146.9 of this chapter) for issuing permits, including the number of permits in each class of injection well which will be issued each year during the first five years of program operation. For Class VI programs, include the priorities for issuing permits and the number of permits which will be issued during the first two years of program operation;

(3) A description of how the Director will implement the mechanical integrity testing requirements of §146.8 of this chapter, or, for Class VI wells, the mechanical integrity testing requirements of §146.89 of this chapter, including the frequency of testing that will be required and the number of tests that will be reviewed by the Director each year;

(4) A description of the procedure whereby the Director will notify owners or operators of injection wells of the requirement that they apply for and obtain a permit. The notification required by this paragraph shall require applications to be filed as soon as possible, but not later than four years after program approval for all injection wells requiring a permit. For Class VI programs approved before December 10, 2011, a description of the procedure whereby the Director will notify owners or operators of any Class I wells previously permitted for the purpose of geologic sequestration or Class V experimental technology wells no longer being used for experimental purposes

that will continue injection of carbon dioxide for the purpose of GS that they must apply for a Class VI permit pursuant to requirements at §146.81(c) within one year of December 10, 2011. For Class VI programs approved following December 10, 2011, a description of the procedure whereby the Director will notify owners or operators of any Class I wells previously permitted for the purpose of geologic sequestration or Class V experimental technology wells no longer being used for experimental purposes that will continue injection of carbon dioxide for the purpose of GS or Class VI wells previously permitted by EPA that they must apply for a Class VI permit pursuant to requirements at §146.81(c) within one year of Class VI program approval;

(5) A description of any rule under which the Director proposes to authorize injections, including the text of the rule;

(6) For any existing enhanced recovery and hydrocarbon storage wells which the Director proposes to authorize by rule, a description of the procedure for reviewing the wells for compliance with applicable monitoring, reporting, construction, and financial responsibility requirements of §§144.51 and 144.52, and 40 CFR part 146;

(7) A description of and schedule for the State's program to establish and maintain a current inventory of injection wells which must be permitted under State law;

(8) Where the Director had designated underground sources of drinking water in accordance with §144.7(a), a description and identification of all such designated sources in the State;

(9) A description of aquifers, or parts thereof, which the Director has identified under §144.7(b) as exempted aquifers, and a summary of supporting data. For Class VI programs only, States must incorporate information related to any EPA approved exemptions expanding the areal extent of existing aquifer exemptions for Class II enhanced oil recovery or enhanced gas recovery wells transitioning to Class VI injection for geologic sequestration pursuant to requirements at §§146.4(d) and 144.7(d), including a summary of supporting data and the specific location of the aquifer exemption expansions. Other than expansions of the areal extent of Class II enhanced oil recovery or enhanced gas recovery well aquifer exemptions for Class VI injection, new aquifer exemptions shall not be issued for Class VI wells or injection activities;

(10) A description of and schedule for the State's program to ban Class IV wells prohibited under §144.13; and

(11) A description of and schedule for the State's program to establish an inventory of Class V wells and to assess the need for a program to regulate Class V wells.

(12) *For Class V programs only*. A description of and a schedule for the State's plan to identify and delineate other sensitive ground water areas. States should consider geologic and hydrogeologic settings, ground water flow and occurrence, topographic and geographic features, depth to ground water, significance as a drinking water source, prevailing land use practices and any other existing information relating to the susceptibility of ground water to contamination from Class V injection wells when developing their plan. Within the schedule for the plan, States must commit to: completing all delineations of other sensitive ground water areas by no later than Jan. 1, 2004; making these delineation available to the public; implementing the Class V regulations, effective April 5, 2000, in these delineated areas by no later than January 1, 2007. Alternately, if a State chooses not to identify other sensitive ground water areas, the requirements for motor vehicle waste disposal wells would apply statewide by January 1, 2007.

(13) For Class VI programs, a description of the procedure whereby the Director must notify, in writing, any States, Tribes, and Territories of any permit applications for geologic sequestration of carbon dioxide wherein the area of review crosses State, Tribal, or Territory boundaries, resulting in the need for trans-boundary coordination related to an injection operation.

[48 FR 14202, Apr. 1, 1983, as amended at 64 FR 68572, Dec. 7, 1999; 75 FR 77290, Dec. 10, 2010]

§ 145.24 Attorney General's statement.

(a) Any State that seeks to administer a program under this part shall submit a statement from the State Attorney General (or the attorney for those State or interstate agencies which have independent legal counsel) that the laws of the State, or an interstate compact, provide adequate authority to carry out the program described under § 145.23 and to meet the requirements of this part. This statement shall include citations to the specific statutes, administrative regulations, and, where appropriate, judicial decisions which demonstrate adequate authority. State statutes and regulations cited by the State Attorney General or independent legal counsel shall be in the form of lawfully adopted State statutes and regulations at the time the statement is signed and shall be fully effective by the time the program is approved. To qualify as ''independent legal counsel'' the attorney signing the statement required by this section must have full authority to independently represent the State agency in court on all matters pertaining to the State program.

NOTE: EPA will supply States with an Attorney General's statement format on request.

(b) When a State seeks authority over activities on Indian lands, the statement shall contain an appropriate analysis of the State's authority.

§ 145.25 Memorandum of Agreement with the Regional Administrator.

(a) Any State that seeks to administer a program under this part shall submit a Memorandum of Agreement. The Memorandum of Agreement shall be executed by the State Director and the Regional Administrator and shall become effective when approved by the Administrator. In addition to meeting the requirements of paragraph (b) of this section, the Memorandum of Agreement may include other terms, conditions, or agreements consistent with this part and relevant to the administration and enforcement of the State's regulatory program. The Administrator shall not approve any Memorandum of Agreement which contains provisions which restrict EPA's statutory oversight responsibility.

(b) The Memorandum of Agreement shall include the following:

(1) Provisions for the prompt transfer from EPA to the State of pending permit applications and any other information relevant to program operation not already in the possession of the State Director (e.g., support files for permit issuance, compliance reports, etc.). When existing permits are transferred from EPA to State for administration, the Memorandum of Agreement shall contain provisions specifying a procedure for transferring the administration of these permits. If a State lacks the authority to directly administer permits issued by the Federal government, a procedure may be established to transfer responsibility for these permits.

NOTE: For example, EPA and the State and the permittee could agree that the State would issue a permit(s) identical to the outstanding Federal permit which would simultaneously be terminated.

(2) Provisions specifying classes and categories of permit applications, draft permits, and proposed permits that the State will send to the Regional Administrator for review, comment and, where applicable, objection.

(3) Provisions specifying the frequency and content of reports, documents and other information which the State is required to submit to EPA. The State shall allow EPA to routinely review State records, reports, and files relevant to the administration and enforcement of the approved program. State reports may be combined with grant reports where appropriate.

(4) Provisions on the State's compliance monitoring and enforcement program, including:

(i) Provisions for coordination of compliance monitoring activities by the State and by EPA. These may specify the basis on which the Regional Administrator will select facilities or activities within the State for EPA inspection. The Regional Administrator will normally notify the State at least 7 days before any such inspection; and

(ii) Procedures to assure coordination of enforcement activities.

(5) When appropriate, provisions for joint processing of permits by the State and EPA, for facilities or activities which require permits from both

EPA and the State under different programs. See § 124.4.

(6) Provisions for modification of the Memorandum of Agreement in accordance with this part.

(c) The Memorandum of Agreement, the annual program and grant and the State/EPA Agreement should be consistent. If the State/EPA Agreement indicates that a change is needed in the Memorandum of Agreement, the Memorandum of Agreement may be amended through the procedures set forth in this part. The State/EPA Agreement may not override the Memorandum of Agreement.

NOTE: Detailed program priorities and specific arrangements for EPA support of the State program will change and are therefore more appropriately negotiated in the context of annual agreements rather than in the MOA. However, it may still be appropriate to specify in the MOA the basis for such detailed agreements, e.g., a provision in the MOA specifying that EPA will select facilities in the State for inspection annually as part of the State/EPA agreement.

Subpart D—Program Approval, Revision and Withdrawal

§ 145.31 Approval process.

(a) Prior to submitting an application to the Administrator for approval of a State UIC program, the State shall issue public notice of its intent to adopt a UIC program and to seek program approval from EPA. This public notice shall:

(1) Be circulated in a manner calculated to attract the attention of interested persons. Circulation of the public notice shall include publication in enough of the largest newspapers in the State to attract Statewide attention and mailing to persons on appropriate State mailing lists and to any other persons whom the agency has reason to believe are interested;

(2) Indicate when and where the State's proposed program submission may be reviewed by the public;

(3) Indicate the cost of obtaining a copy of the submission;

(4) Provide for a comment period of not less than 30 days during which interested persons may comment on the proposed UIC program;

(5) Schedule a public hearing on the State program for no less than 30 days after notice of the hearing is published;

(6) Briefly outline the fundamental aspects of the State UIC program; and

(7) Identify a person that an interested member of the public may contact for further information.

(b) After complying with the requirements of paragraph (a) of this section any State may submit a proposed UIC program under section 1422 of SDWA and § 145.22 of this part to EPA for approval. Such a submission shall include a showing of compliance with paragraph (a) of this section; copies of all written comments received by the State; a transcript, recording or summary of any public hearing which was held by the State; and a responsiveness summary which identifies the public participation activities conducted, describes the matters presented to the public, summarizes significant comments received, and responds to these comments. A copy of the responsiveness summary shall be sent to those who testified at the hearing, and others upon request.

(c) After determining that a State's submission for UIC program approval is complete the Administrator shall issue public notice of the submission in the FEDERAL REGISTER and in accordance with paragraph (a)(1) of this section. Such notice shall:

(1) Indicate that a public hearing will be held by EPA no earlier than 30 days after notice of the hearing. The notice may require persons wishing to present testimony to file a request with the Regional Administrator, who may cancel the public hearing if sufficient public interest in a hearing is not expressed;

(2) Afford the public 30 days after the notice to comment on the State's submission; and

(3) Note the availability of the State submission for inspection and copying by the public.

(d) The Administrator shall approve State programs which conform to the applicable requirements of this part.

(e) Within 90 days of the receipt of a complete submission (as provided in

§ 145.22) or material amendment thereto, the Administrator shall by rule either fully approve, disapprove, or approve in part the State's UIC program taking into account any comments submitted. The Administrator shall give notice of this rule in the FEDERAL REGISTER and in accordance with paragraph (a)(1) of this section. If the Administrator determines not to approve the State program or to approve it only in part, the notice shall include a concise statement of the reasons for this determination. A responsiveness summary shall be prepared by the Regional Office which identifies the public participation activities conducted, describes the matters presented to the public, summarizes significant comments received, and explains the Agency's response to these comments. The responsiveness summary shall be sent to those who testified at the public hearing, and to others upon request.

§ 145.32 Procedures for revision of State programs.

(a) Either EPA or the approved State may initiate program revision. Program revision may be necessary when the controlling Federal or State statutory or regulatory authority is modified or supplemented. The state shall keep EPA fully informed of any proposed modifications to its basic statutory or regulatory authority, its forms, procedures, or priorities.

(b) Revision of a State program shall be accomplished as follows:

(1) The State shall submit a modified program description, Attorney General's statement, Memorandum of Agreement, or such other documents as EPA determines to be necessary under the circumstances.

(2) Whenever EPA determines that the proposed program revision is substantial, EPA shall issue public notice and provide an opportunity to comment for a period of at least 30 days. The public notice shall be mailed to interested persons and shall be published in the FEDERAL REGISTER and in enough of the largest newspapers in the State to provide Statewide coverage. The public notice shall summarize the proposed revisions and provide for the opportunity to request a public hearing. Such a hearing will be held is there if significant public interest based on requests received. All requests for expansions to the areal extent of Class II enhanced oil recovery or enhanced gas recovery aquifer exemptions for Class VI wells must be treated as substantial program revisions.

(3) The Administrator shall approve or disapprove program revisions based on the requirements of this part and of the Safe Drinking Water Act.

(4) A program revision shall become effective upon the approval of the Administrator. Notice of approval of any substantial revision shall be published in the FEDERAL REGISTER. Notice of approval of non-substantial program revisions may be given by a letter from the Administrator to the State Governor or his designee.

(c) States with approved programs shall notify EPA whenever they propose to transfer all or part of any program from the approved State agency to any other State agency, and shall identify any new division of responsibilities among the agencies involved. The new agency is not authorized to administer the program until approval by the Administrator under paragraph (b) of this section. Organizational charts required under § 145.23(b) shall be revised and resubmitted.

(d) Whenever the Administrator has reason to believe that circumstances have changed with respect to a State program, he may request, and the State shall provide, a supplemental Attorney General's statement, program description, or such other documents or information as are necessary.

(e) The State shall submit the information required under paragraph (b)(1) of this section within 270 days of any amendment to this part or 40 CFR part 144, 146, or 124 which revises or adds any requirement respecting an approved UIC program.

[48 FR 14202, Apr. 1, 1983, as amended at 75 FR 77291, Dec. 10, 2010]

§ 145.33 Criteria for withdrawal of State programs.

(a) The Administrator may withdraw program approval when a State program no longer complies with the requirements of this part, and the State fails to take corrective action. Such circumstances include the following:

(1) When the State's legal authority no longer meets their requirements of this part, including:

(i) Failure of the State to promulgate or enact new authorities when necessary; or

(ii) Action by a State legislature or court striking down or limiting State authorities.

(2) When the operation of the State program fails to comply with the requirements of this part, including:

(i) Failure to exercise control over activities required to be regulated under this part, including failure to issue permits;

(ii) Repeated issuance of permits which do not conform to the requirements of this part; or

(iii) Failure to comply with the public participation requirements of this part.

(3) When the State's enforcement program fails to comply with the requirements of this part, including:

(i) Failure to act on violations of permits or other program requirements;

(ii) Failure to seek adequate enforcement penalties or to collect administrative fines when imposed; or

(iii) Failure to inspect and monitor activities subject to regulation.

(4) When the State program fails to comply with the terms of the Memorandum of Agreement required under § 145.24.

§ 145.34 Procedures for withdrawal of State programs.

(a) A State with a program approved under this part may voluntarily transfer program responsibilities required by Federal law to EPA by taking the following actions, or in such other manner as may be agreed upon with the Administrator.

(1) The State shall give the Administrator 180 days notice of the proposed transfer and shall submit a plan for the orderly transfer of all relevant program information not in the possession of EPA (such as permits, permit files, compliance files, reports, permit applications) which are necessary for EPA to administer the program.

(2) Within 60 days of receiving the notice and transfer plan, the Administrator shall evaluate the State's transfer plan and shall identify any additional information needed by the Federal government for program administration and/or identify any other deficiencies in the plan.

(3) At least 30 days before the transfer is to occur the Administrator shall publish notice of the transfer in the FEDERAL REGISTER and in enough of the largest newspapers in the State to provide Statewide coverage, and shall mail notice to all permit holders, permit applicants, other regulated persons and other interested persons on appropriate EPA and State mailing lists.

(b) Approval of a State UIC program may be withdrawn and a Federal program established in its place when the Administrator determines, after holding a public hearing, that the State program is not in compliance with the requirements of SDWA and this part.

(1) *Notice to State of public hearing.* If the Administrator has cause to believe that a State is not administering or enforcing its authorized program in compliance with the requirements of SDWA and this part, he or she shall inform the State by registered mail of the specific areas of alleged noncompliance. If the State demonstrates to the Administrator within 30 days of such notification that the State program is in compliance, the Administrator shall take no further action toward withdrawal and shall so notify the State by registered mail.

(2) *Public hearing.* If the State has not demonstrated its compliance to the satisfaction of the Administrator within 30 days after notification, the Administrator shall inform the State Director and schedule a public hearing to discuss withdrawal of the State program. Notice of such public hearing shall be published in the FEDERAL REGISTER and in enough of the largest newspapers in the State to attract statewide attention, and mailed to persons on appropriate State and EPA mailing lists. This hearing shall be convened not less than 60 days nor more than 75 days following the publication of the notice of the hearing. Notice of the hearing shall identify the Administrator's concerns. All interested persons shall be given opportunity to make written or oral presentation on the State's program at the public hearing.

(3) *Notice to State of findings.* When the Administrator finds after the public hearing that the State is not in compliance, he or she shall notify the State by registered mail of the specific deficiencies in the State program and of necessary remedial actions. Within 90 days of receipt of the above letter, the State shall either carry out the required remedial action or the Administrator shall withdraw program approval. If the State carries out the remedial action or, as a result of the hearing is found to be in compliance, the Administrator shall so notify the State by registered mail and conclude the withdrawal proceedings.

Subpart E—Indian Tribes

SOURCE: 53 FR 37412, Sept. 26, 1988, unless otherwise noted.

§ 145.52 Requirements for Tribal eligibility.

The Administrator is authorized to treat an Indian Tribe as eligible to apply for primary enforcement responsibility for the Underground Injection Control Program if it meets the following criteria:

(a) The Indian Tribe is recognized by the Secretary of the Interior.

(b) The Indian Tribe has a Tribal governing body which is currently ''carrying out substantial governmental duties and powers'' over a defined area, (*i.e.*, is currently performing governmental functions to promote the health, safety, and welfare of the affected population within a defined geographic area).

(c) The Indian Tribe demonstrates that the functions to be performed in regulating the underground injection wells that the applicant intends to regulate are within the area of the Indian Tribal government's jurisdiction.

(d) The Indian Tribe is reasonably expected to be capable, in the Administrator's judgment, of administering (in a manner consistent with the terms and purposes of the Act and all applicable regulations) an effective Underground Injection Control Program.

[53 FR 37412, Sept. 26, 1988, as amended at 59 FR 64345, Dec. 14, 1994]

§ 145.56 Request by an Indian Tribe for a determination of eligibility.

An Indian Tribe may apply to the Administrator for a determination that it meets the criteria of section 1451 of the Act. The application shall be concise and describe how the Indian Tribe will meet each of the requirements of § 145.52. The application shall consist of the following:

(a) A statement that the Tribe is recognized by the Secretary of the Interior.

(b) A descriptive statement demonstrating that the Tribal governing body is currently carrying out substantial governmental duties and powers over a defined area. The statement should:

(1) Describe the form of the Tribal government;

(2) Describe the types of governmental functions currently performed by the Tribal governing body such as, but not limited to, the exercise of police powers affecting (or relating to) the health, safety, and welfare of the affected population; taxation; and the exercise of the power of eminent domain; and

(3) Identify the sources of the Tribal government's authority to carry out the governmental functions currently being performed.

(c) A map or legal description of the area over which the Indian Tribe asserts jurisdiction; a statement by the Tribal Attorney General (or equivalent official) which describes the basis for the Tribe's jurisdictional assertion (including the nature or subject matter of the asserted jurisdiction); a copy of those documents such as Tribal constitutions, by-laws, charters, executive orders, codes, ordinances, and/or resolutions which the Tribe believes are relevant to its assertions regarding jurisdiction; and a description of the locations of the underground injection wells the Tribe proposes to regulate.

(d) A narrative statement describing the capability of the Indian Tribe to administer an effective Underground Injection Control program which should include:

(1) A description of the Indian Tribe's previous management experience which may include, the administration of programs and services authorized

under the Indian Self-Determination and Education Assistance Act (25 U.S.C. 450 *et seq.*), the Indian Mineral Development Act (25 U.S.C. 2101 *et seq.*), or the Indian Sanitation Facilities Construction Activity Act (42 U.S.C. 2004a).

(2) A list of existing environmental or public health programs administered by the Tribal governing body and a copy of related Tribal laws, regulations and policies.

(3) A description of the Indian Tribe's accounting and procurement systems.

(4) A description of the entity (or entities) which exercise the executive, legislative, and judicial functions of the Tribal government.

(5) A description of the existing, or proposed, agency of the Indian Tribe which will assume primary enforcement responsibility, including a description of the relationship between owners/operators of the underground injection wells and the agency.

(6) A description of the technical and administrative capabilities of the staff to administer and manage an effective Underground Injection Control Program or a plan which proposes how the Tribe will acquire additional administrative and/or technical expertise. The plan must address how the Tribe will obtain the funds to acquire the additional administrative and technical expertise.

(e) The Adminstrator may, in his discretion, request further documentation necessary to support a Tribe's eligibility.

(f) If the Administrator has previously determined that a Tribe has met the prerequisites that make it eligible to assume a role similar to that of a State as provided by statute under the Safe Drinking Water Act, the Clean Water Act, or the Clean Air Act, then that Tribe need provide only that information unique to the Underground Injection Control program (§ 145.76(c) and (d)(6)).

[53 FR 37412, Sept. 26, 1988, as amended at 59 FR 64345, Dec. 14, 1994]

§ 145.58 Procedure for processing an Indian Tribe's application.

(a) The Administrator shall process a completed application of an Indian Tribe in a timely manner. He shall promptly notify the Indian Tribe of receipt of the application.

(b) A tribe that meets the requirements of § 145.52 is eligible to apply for development grants and primary enforcement responsibility for an Underground Injection Control program and the associated funding under section 1443(b) of the Act and primary enforcement responsibility for the Underground Injection Control Program under sections 1422 and/or 1425 of the Act.

[53 FR 37412, Sept. 26, 1988, as amended at 59 FR 64345, Dec. 14, 1994]

PART 146—UNDERGROUND INJECTION CONTROL PROGRAM: CRITERIA AND STANDARDS

Subpart A—General Provisions

Sec.

146.1 Applicability and scope.
146.2 Law authorizing these regulations.
146.3 Definitions.
146.4 Criteria for exempted aquifers.
146.5 Classification of injection wells.
146.6 Area of review.
146.7 Corrective action.
146.8 Mechanical integrity.
146.9 Criteria for establishing permitting priorities.
146.10 Plugging and abandoning Class I-III wells.

Subpart B—Criteria and Standards Applicable to Class I Wells

146.11 Criteria and standards applicable to Class I nonhazardous wells.
146.12 Construction requirements.
146.13 Operating, monitoring and reporting requirements.
146.14 Information to be considered by the Director.
146.15 Class I municipal disposal well alternative authorization in certain parts of Florida.
146.16 Requirements for new Class I municipal wells in certain parts of Florida.

Subpart C—Criteria and Standards Applicable to Class II Wells

146.21 Applicability.
146.22 Construction requirements.
146.23 Operating, monitoring, and reporting requirements.
146.24 Information to be considered by the Director.

Subpart D—Criteria and Standards Applicable to Class III Wells

146.31 Applicability.
146.32 Construction requirements.
146.33 Operating, monitoring, and reporting requirements.
146.34 Information to be considered by the Director.

Subpart E—Criteria and Standards Applicable to Class IV Injection Wells [Reserved]

Subpart F—Criteria and Standards Applicable to Class V Injection Wells

146.51 Applicability.

Subpart G—Criteria and Standards Applicable to Class I Hazardous Waste Injection Wells

146.61 Applicability.
146.62 Minimum criteria for siting.
146.63 Area of review.
146.64 Corrective action for wells in the area of review.
146.65 Construction requirements.
146.66 Logging, sampling, and testing prior to new well operation.
146.67 Operating requirements.
146.68 Testing and monitoring requirements.
146.69 Reporting requirements.
146.70 Information to be evaluated by the Director.
146.71 Closure.
146.72 Post-closure care.
146.73 Financial responsibility for post-closure care.

Subpart H—Criteria and Standards Applicable to Class VI Wells

146.81 Applicability.
146.82 Required Class VI permit information.
146.83 Minimum criteria for siting.
146.84 Area of review and corrective action.
146.85 Financial responsibility.
146.86 Injection well construction requirements.
146.87 Logging, sampling, and testing prior to injection well operation.
146.88 Injection well operating requirements.
146.89 Mechanical integrity.
146.90 Testing and monitoring requirements.
146.91 Reporting requirements.
146.92 Injection well plugging.
146.93 Post-injection site care and site closure.
146.94 Emergency and remedial response.
146.95 Class VI injection depth waiver requirements.

AUTHORITY: Safe Drinking Water Act, 42 U.S.C. 300f *et seq.;* Resource Conservation and Recovery Act, 42 U.S.C. 6901 *et seq.*

SOURCE: 45 FR 42500, June 24, 1980, unless otherwise noted.

Subpart A—General Provisions

§ 146.1 Applicability and scope.

(a) This part sets forth technical criteria and standards for the Underground Injection Control Program. This part should be read in conjunction with 40 CFR parts 124, 144, and 145, which also apply to UIC programs. 40 CFR part 144 defines the regulatory framework of EPA administered permit programs. 40 CFR part 145 describes the elements of an approvable State program and procedures for EPA approval of State participation in the permit programs. 40 CFR part 124 describes the procedures the Agency will use for issuing permits under the covered programs. Certain of these procedures will also apply to State-administered programs as specified in 40 CFR part 145.

(b) Upon the approval, partial approval or promulgation of a State UIC program by the Administrator, any underground injection which is not authorized by the Director by rule or by permit is unlawful.

(Clean Water Act, Safe Drinking Water Act, Clean Air Act, Resource Conservation and Recovery Act: 42 U.S.C. 6905, 6912, 6925, 6927, 6974)

[45 FR 42500, June 24, 1980, as amended at 48 FR 14293, Apr. 1, 1983]

§ 146.2 Law authorizing these regulations.

The Safe Drinking Water Act, 42 U.S.C. 300f *et seq.* authorizes these regulations and all other UIC program regulations referenced in 40 CFR part 144. Certain regulations relating to the injection of hazardous waste are also authorized by the Resource Conservation and Recovery Act, 42 U.S.C. 6901 *et seq.*

[58 FR 63898, Dec. 3, 1993]

§ 146.3 Definitions.

The following definitions apply to the underground injection control program.

Abandoned well means a well whose use has been permanently discontinued or which is in a state of disrepair such that it cannot be used for its intended purpose or for observation purposes.

Administrator means the Administrator of the United States Environmental Protection Agency, or an authorized representative.

Application means the EPA standard national forms for applying for a permit, including any additions, revisions or modifications to the forms; or forms approved by EPA for use in approved States, including any approved modifications or revisions. For RCRA, application also includes the information required by the Director under § 122.25 (contents of Part B of the RCRA application).

Aquifer means a geological formation, group of formations, or part of a formation that is capable of yielding a significant amount of water to a well or spring.

Area of review means the area surrounding an injection well described according to the criteria set forth in § 146.06 or in the case of an area permit, the project area plus a circumscribing area the width of which is either ¼ of a mile or a number calculated according to the criteria set forth in § 146.06.

Casing means a pipe or tubing of appropriate material, of varying diameter and weight, lowered into a borehole during or after drilling in order to support the sides of the hole and thus prevent the walls from caving, to prevent loss of drilling mud into porous ground, or to prevent water, gas, or other fluid from entering or leaving the hole.

Catastrophic collapse means the sudden and utter failure of overlying ''strata'' caused by removal of underlying materials.

Cementing means the operation whereby a cement slurry is pumped into a drilled hole and/or forced behind the casing.

Cesspool means a ''drywell'' that receives untreated sanitary waste containing human excreta, and which sometimes has an open bottom and/or perforated sides.

Confining bed means a body of impermeable or distinctly less permeable material stratigraphically adjacent to one or more aquifers.

Confining zone means a geological formation, group of formations, or part of a formation that is capable of limiting fluid movement above an injection zone.

Contaminant means any physical, chemical, biological, or radiological substance or matter in water.

Conventional mine means an open pit or underground excavation for the production of minerals.

Director means the Regional Administrator, the State director or the Tribal director as the context requires, or an authorized representative. When there is no approved State or Tribal program, and there is an EPA administered program, ''Director'' means the Regional Administrator. When there is an approved State or Tribal program, ''Director'' normally means the State or Tribal director. In some circumstances, however, EPA retains the authority to take certain actions even when there is an approved State or Tribal program. (For example, when EPA has issued an NPDES permit prior to the approval of a State program, EPA may retain jurisdiction over that permit after program approval; see § 123.69). In such cases, the term *Director* means the Regional Administrator and not the State or Tribal director.

Disposal well means a well used for the disposal of waste into a subsurface stratum.

Drywell means a well, other than an improved sinkhole or subsurface fluid distribution system, completed above the water table so that its bottom and sides are typically dry except when receiving fluids.

Effective date of a UIC program means the date that a State UIC program is approved or established by the Administrator.

Environmental Protection Agency (''EPA'') means the United States Environmental Protection Agency.

EPA means the United States ''Environmental Protection Agency.''

Exempted aquifer means an aquifer or its portion that meets the criteria in the definition of ''underground source of drinking water'' but which has been exempted according to the procedures of § 144.8(b).

Existing injection well means an ''injection well'' other than a ''new injection well.''

Experimental technology means a technology which has not been proven feasible under the conditions in which it is being tested.

Facility or activity means any ''HWM facility,'' UIC ''injection well,'' NPDES ''point source,'' or State 404 dredge and fill activity, or any other facility or activity (including land or appurtenances thereto) that is subject to regulation under the RCRA, UIC, NPDES, or 404 programs.

Fault means a surface or zone of rock fracture along which there has been displacement.

Flow rate means the volume per time unit given to the flow of gases or other fluid substance which emerges from an orifice, pump, turbine or passes along a conduit or channel.

Fluid means material or substance which flows or moves whether in a semisolid, liquid, sludge, gas, or any other form or state.

Formation means a body of rock characterized by a degree of lithologic homogeneity which is prevailingly, but not necessarily, tabular and is mappable on the earth's surface or traceable in the subsurface.

Formation fluid means ''fluid'' present in a ''formation'' under natural conditions as opposed to introduced fluids, such as drilling mud.

Generator means any person, by site location, whose act or process produces hazardous waste identified or listed in 40 CFR part 261.

Ground water means water below the land surface in a zone of saturation.

Hazardous waste means a hazardous waste as defined in 40 CFR 261.3.

Hazardous Waste Management facility (''HWM facility'') means all contiguous land, and structures, other appurtenances, and improvements on the land used for treating, storing, or disposing of hazardous waste. A facility may consist of several treatment, storage, or disposal operational units (for example, one or more landfills, surface impoundments, or combination of them).

HWM facility means ''Hazardous Waste Management facility.''

Improved sinkhole means a naturally occurring karst depression or other natural crevice found in volcanic terrain and other geologic settings which have been modified by man for the purpose of directing and emplacing fluids into the subsurface.

Indian Tribe means any Indian Tribe having a Federally recognized governing body carrying out substantial governmental duties and powers over a defined area.

Injection well means a ''well'' into which ''fluids'' are being injected.

Injection zone means a geological ''formation'', group of formations, or part of a formation receiving fluids through a well.

Lithology means the description of rocks on the basis of their physical and chemical characteristics.

Owner or operator means the owner or operator of any facility or activity subject to regulation under the RCRA, UIC, NPDES, or 404 programs.

Packer means a device lowered into a well to produce a fluid-tight seal.

Permit means an authorization, license, or equivalent control document issued by EPA or an ''approved State'' to implement the requirements of this part and parts 124, 144, and 145. Permit does not include RCRA interim status (§ 122.23), UIC authorization by rule (§§ 144.21 to 144.26 and 144.15), or any permit which has not yet been the subject of final agency action, such as a ''draft permit'' or a ''proposed permit.''

Plugging means the act or process of stopping the flow of water, oil or gas into or out of a formation through a borehole or well penetrating that formation.

Plugging record means a systematic listing of permanent or temporary abandonment of water, oil, gas, test, exploration and waste injection wells, and may contain a well log, description of amounts and types of plugging material used, the method employed for plugging, a description of formations which are sealed and a graphic log of the well showing formation location, formation thickness, and location of plugging structures.

Point of injection for Class V wells means the last accessible sampling point prior to waste fluids being released into the subsurface environment

through a Class V injection well. For example, the point of injection of a Class V septic system might be the distribution box—the last accessible sampling point before the waste fluids drain into the underlying soils. For a dry well, it is likely to be the well bore itself.

Pressure means the total load or force per unit area acting on a surface.

Project means a group of wells in a single operation.

Radioactive waste means any waste which contains radioactive material in concentrations which exceed those listed in 10 CFR part 20, appendix B, table II column 2.

RCRA means the Solid Waste Disposal Act as amended by the Resource Conservation and Recovery Act of 1976 (Pub. L. 94–580, as amended by Pub. L. 95–609, 42 U.S.C. 6901 *et seq.)*.

Sanitary waste means liquid or solid wastes originating solely from humans and human activities, such as wastes collected from toilets, showers, wash basins, sinks used for cleaning domestic areas, sinks used for food preparation, clothes washing operations, and sinks or washing machines where food and beverage serving dishes, glasses, and utensils are cleaned. Sources of these wastes may include single or multiple residences, hotels and motels, restaurants, bunkhouses, schools, ranger stations, crew quarters, guard stations, campgrounds, picnic grounds, day-use recreation areas, other commercial facilities, and industrial facilities provided the waste is not mixed with industrial waste.

SDWA means the Safe Drinking Water Act (Pub. L. 95–523, as amended by Pub. L. 95–190, 42 U.S.C. 300(f) *et seq.)*.

Septic system means a ''well'' that is used to emplace sanitary waste below the surface and is typically comprised of a septic tank and subsurface fluid distribution system or disposal system.

Site means the land or water area where any facility or activity is physically located or conducted, including adjacent land used in connection with the facility or activity.

Sole or principal source aquifer means an aquifer which has been designated by the Administrator pursuant to section 1424 (a) or (e) of the SDWA.

State Director means the chief administrative officer of any State, interstate, or Tribal agency operating an ''approved program,'' or the delegated representative of the State Director. If the responsibility is divided among two or more State, interstate, or Tribal agencies, ''State Director'' means the chief administrative officer of the State, interstate, or Tribal agency authorized to perform the particular procedure or function to which reference is made.

Stratum (plural *strata*) means a single sedimentary bed or layer, regardless of thickness, that consists of generally the same kind of rock material.

Subsidence means the lowering of the natural land surface in response to: Earth movements; lowering of fluid pressure; removal of underlying supporting material by mining or solution of solids, either artificially or from natural causes; compaction due to wetting (Hydrocompaction); oxidation of organic matter in soils; or added load on the land surface.

Subsurface fluid distribution system means an assemblage of perforated pipes, drain tiles, or other similar mechanisms intended to distribute fluids below the surface of the ground.

Surface casing means the first string of well casing to be installed in the well.

Total dissolved solids (''TDS'') means the total dissolved (filterable) solids as determined by use of the method specified in 40 CFR part 136.

UIC means the Underground Injection Control program under Part C of the Safe Drinking Water Act, including an ''approved program.''

Underground injection means a ''well injection.''

Underground source of drinking water (USDW) means an aquifer or its portion:

(1)(i) Which supplies any public water system; or

(ii) Which contains a sufficient quantity of ground water to supply a public water system; and

(A) Currently supplies drinking water for human consumption; or

(B) Contains fewer than 10,000 mg/l total dissolved solids; and

(2) Which is not an exempted aquifer.

USDW means ''underground source of drinking water.''

Well means: A bored, drilled, or driven shaft whose depth is greater than the largest surface dimension; or, a dug hole whose depth is greater than the largest surface dimension; or, an improved sinkhole; or, a subsurface fluid distribution system.

Well injection means the subsurface emplacement of fluids through a well.

Well plug means a watertight and gastight seal installed in a borehole or well to prevent movement of fluids.

Well stimulation means several processes used to clean the well bore, enlarge channels, and increase pore space in the interval to be injected thus making it possible for wastewater to move more readily into the formation, and includes (1) surging, (2) jetting, (3) blasting, (4) acidizing, (5) hydraulic fracturing.

Well monitoring means the measurement, by on-site instruments or laboratory methods, of the quality of water in a well.

(Clean Water Act, Safe Drinking Water Act, Clean Air Act, Resource Conservation and Recovery Act: 42 U.S.C. 6905, 6912, 6925, 6927, 6974)

[45 FR 42500, June 24, 1980, as amended at 46 FR 43161, Aug. 27, 1981; 47 FR 4998, Feb. 3, 1982; 48 FR 14293, Apr. 1, 1983; 53 FR 37414, Sept. 26, 1988; 64 FR 68573, Dec. 7, 1999]

§ 146.4 Criteria for exempted aquifers.

An aquifer or a portion thereof which meets the criteria for an ''underground source of drinking water'' in § 146.3 may be determined under § 144.7 of this chapter to be an ''exempted aquifer'' for Class I–V wells if it meets the criteria in paragraphs (a) through (c) of this section. Class VI wells must meet the criteria under paragraph (d) of this section:

(a) It does not currently serve as a source of drinking water; and

(b) It cannot now and will not in the future serve as a source of drinking water because:

(1) It is mineral, hydrocarbon or geothermal energy producing, or can be demonstrated by a permit applicant as part of a permit application for a Class II or III operation to contain minerals or hydrocarbons that considering their quantity and location are expected to be commercially producible.

(2) It is situated at a depth or location which makes recovery of water for drinking water purposes economically or technologically impractical;

(3) It is so contaminated that it would be economically or technologically impractical to render that water fit for human consumption; or

(4) It is located over a Class III well mining area subject to subsidence or catastrophic collapse; or

(c) The total dissolved solids content of the ground water is more than 3,000 and less than 10,000 mg/l and it is not reasonably expected to supply a public water system.

(d) The areal extent of an aquifer exemption for a Class II enhanced oil recovery or enhanced gas recovery well may be expanded for the exclusive purpose of Class VI injection for geologic sequestration under § 144.7(d) of this chapter if it meets the following criteria:

(1) It does not currently serve as a source of drinking water; and

(2) The total dissolved solids content of the ground water is more than 3,000 mg/l and less than 10,000 mg/l; and

(3) It is not reasonably expected to supply a public water system.

(Clean Water Act, Safe Drinking Water Act, Clean Air Act, Resource Conservation and Recovery Act: 42 U.S.C. 6905, 6912, 6925, 6927, 6974)

[45 FR 42500, June 24, 1980, as amended at 47 FR 4998, Feb. 3, 1982; 48 FR 14293, Apr. 1, 1983; 75 FR 77291, Dec. 10, 2010]

§ 146.5 Classification of injection wells.

Injection wells are classified as follows:

(a) *Class I.* (1) Wells used by generators of hazardous waste or owners or operators of hazardous waste management facilities to inject hazardous waste beneath the lowermost formation containing, within one quarter (¼) mile of the well bore, an underground source of drinking water.

(2) Other industrial and municipal disposal wells which inject fluids beneath the lowermost formation containing, within one quarter mile of the well bore, an underground source of drinking water.

(3) Radioactive waste disposal wells which inject fluids below the lowermost formation containing an underground source of drinking water within one quarter mile of the well bore.

(b) *Class II*. Wells which inject fluids:

(1) Which are brought to the surface in connection with conventional oil or natural gas production and may be commingled with waste waters from gas plants which are an integral part of production operations, unless those waters are classified as a hazardous waste at the time of injection.

(2) For enhanced recovery of oil or natural gas; and

(3) For storage of hydrocarbons which are liquid at standard temperature and pressure.

(c) *Class III*. Wells which inject for extraction of minerals including:

(1) Mining of sulfur by the Frasch process;

(2) In situ production of uranium or other metals. This category includes only in-situ production from ore bodies which have not been conventionally mined. Solution mining of conventional mines such as stopes leaching is included in Class V.

(3) Solution mining of salts or potash.

(d) *Class IV*. (1) Wells used by generators of hazardous waste or of radioactive waste, by owners or operators of hazardous waste management facilities, or by owners or operators of radioactive waste disposal sites to dispose of hazardous waste or radioactive waste into a formation which within one quarter (¼) mile of the well contains an underground source of drinking water.

(2) Wells used by generators of hazardous waste or of radioactive waste, by owners or operators of hazardous waste management facilities, or by owners or operators of radioactive waste disposal sites to dispose of hazardous waste or radioactive waste above a formation which within one quarter (¼) mile of the well contains an underground source of drinking water.

(3) Wells used by generators of hazardous waste or owners or operators of hazardous waste management facilities to dispose of hazardous waste, which cannot be classified under § 146.05(a)(1) or § 146.05(d) (1) and (2) (e.g., wells used to dispose of hazardous wastes into or above a formation which contains an aquifer which has been exempted pursuant to § 146.04).

(e) *Class V*. Injection wells not included in Class I, II, III, IV or VI. Specific types of Class V injection wells are also described in 40 CFR 144.81. Class V wells include:

(1) Air conditioning return flow wells used to return to the supply aquifer the water used for heating or cooling in a heat pump;

(2) Cesspools including multiple dwelling, community or regional cesspools, or other devices that receive wastes which have an open bottom and sometimes have perforated sides. The UIC requirements do not apply to single family residential cesspools nor to non-residential cesspools which receive solely sanitary wastes and have the capacity to serve fewer than 20 persons a day.

(3) Cooling water return flow wells used to inject water previously used for cooling;

(4) Drainage wells used to drain surface fluid, primarily storm runoff, into a subsurface formation;

(5) Dry wells used for the injection of wastes into a subsurface formation;

(6) Recharge wells used to replenish the water in an aquifer;

(7) Salt water intrusion barrier wells used to inject water into a fresh water aquifer to prevent the intrusion of salt water into the fresh water;

(8) Sand backfill and other backfill wells used to inject a mixture of water and sand, mill tailings or other solids into mined out portions of subsurface mines whether what is injected is a radioactive waste or not.

(9) Septic system wells used to inject the waste or effluent from a multiple dwelling, business establishment, community or regional business establishment septic tank. The UIC requirements do not apply to single family residential septic system wells, nor to non-residential septic system wells which are used solely for the disposal of sanitary waste and have the capacity to serve fewer than 20 persons a day.

(10) Subsidence control wells (not used for the purpose of oil or natural

gas production) used to inject fluids into a non-oil or gas producing zone to reduce or eliminate subsidence associated with the overdraft of fresh water;

(11) Radioactive waste disposal wells other than Class IV;

(12) Injection wells associated with the recovery of geothermal energy for heating, aquaculture and production of electric power.

(13) Wells used for solution mining of conventional mines such as stopes leaching;

(14) Wells used to inject spent brine into the same formation from which it was withdrawn after extraction of halogens or their salts;

(15) Injection wells used in experimental technologies.

(16) Injection wells used for in situ recovery of lignite, coal, tar sands, and oil shale.

(f) *Class VI.* Wells that are not experimental in nature that are used for geologic sequestration of carbon dioxide beneath the lowermost formation containing a USDW; or, wells used for geologic sequestration of carbon dioxide that have been granted a waiver of the injection depth requirements pursuant to requirements at §146.95; or, wells used for geologic sequestration of carbon dioxide that have received an expansion to the areal extent of an existing Class II enhanced oil recovery or enhanced gas recovery aquifer exemption pursuant to §§146.4 and 144.7(d) of this chapter.

[45 FR 42500, June 24, 1980, as amended at 46 FR 43161, Aug. 27, 1981; 47 FR 4999, Feb. 3, 1982; 64 FR 68573, Dec. 7, 1999; 75 FR 77291, Dec. 10, 2010]

§146.6 Area of review.

The area of review for each injection well or each field, project or area of the State shall be determined according to either paragraph (a) or (b) of this section. The Director may solicit input from the owners or operators of injection wells within the State as to which method is most appropriate for each geographic area or field.

(a) *Zone of endangering influence.* (1) The zone of endangering influence shall be:

(i) In the case of application(s) for well permit(s) under §122.38 that area the radius of which is the lateral distance in which the pressures in the injection zone may cause the migration of the injection and/or formation fluid into an underground source of drinking water; or

(ii) In the case of an application for an area permit under §122.39, the project area plus a circumscribing area the width of which is the lateral distance from the perimeter of the project area, in which the pressures in the injection zone may cause the migration of the injection and/or formation fluid into an underground source of drinking water.

(2) Computation of the zone of endangering influence may be based upon the parameters listed below and should be calculated for an injection time period equal to the expected life of the injection well or pattern. The following modified Theis equation illustrates one form which the mathematical model may take.

$$r = \left(\frac{2.25\ KHt}{S10^{X}}\right)^{1/2}$$

where:

$$X = \frac{4\pi KH\left(h_w - h_{bo} \times S_p G_b\right)}{2.3Q}$$

r = Radius of endangering influence from injection well (length)

k = Hydraulic conductivity of the injection zone (length/time)

H = Thickness of the injection zone (length)

t = Time of injection (time)

S = Storage coefficient (dimensionless)

Q = Injection rate (volume/time)

h_{bo} = Observed original hydrostatic head of injection zone (length) measured from the base of the lowermost underground source of drinking water

h_w = Hydrostatic head of underground source of drinking water (length) measured from the base of the lowest underground source of drinking water

S_p G_b = Specific gravity of fluid in the injection zone (dimensionless)

π = 3.142 (dimensionless)

The above equation is based on the following assumptions:

(i) The injection zone is homogenous and isotropic;

(ii) The injection zone has infinite area extent;

(iii) The injection well penetrates the entire thickness of the injection zone;

(iv) The well diameter is infinitesimal compared to ''r'' when injection time is longer than a few minutes; and

(v) The emplacement of fluid into the injection zone creates instantaneous increase in pressure.

(b) *Fixed radius.* (1) In the case of application(s) for well permit(s) under § 122.38 a fixed radius around the well of not less than one-fourth (¼) mile may be used.

(2) In the case of an application for an area permit under § 122.39 a fixed width of not less than one-fourth (¼) mile for the circumscribing area may be used.

In determining the fixed radius, the following factors shall be taken into consideration: Chemistry of injected and formation fluids; hydrogeology; population and ground-water use and dependence; and historical practices in the area.

(c) If the area of review is determined by a mathematical model pursuant to paragraph (a) of this section, the permissible radius is the result of such calculation even if it is less than one-fourth (¼) mile.

[45 FR 42500, June 24, 1980, as amended at 46 FR 43161, Aug. 27, 1981; 47 FR 4999, Feb. 3, 1982]

§ 146.7 Corrective action.

In determining the adequacy of corrective action proposed by the applicant under 40 CFR 144.55 and in determining the additional steps needed to prevent fluid movement into underground sources of drinking water, the following criteria and factors shall be considered by the Director:

(a) Nature and volume of injected fluid;

(b) Nature of native fluids or by-products of injection;

(c) Potentially affected population;

(d) Geology;

(e) Hydrology;

(f) History of the injection operation;

(g) Completion and plugging records;

(h) Abandonment procedures in effect at the time the well was abandoned; and

(i) Hydraulic connections with underground sources of drinking water.

(Clean Water Act, Safe Drinking Water Act, Clean Air Act, Resource Conservation and Recovery Act: 42 U.S.C. 6905, 6912, 6925, 6927, 6974)

[45 FR 42500, June 24, 1980, as amended at 46 FR 43162, Aug. 27, 1981; 48 FR 14293, Apr. 1, 1983]

§ 146.8 Mechanical integrity.

(a) An injection well has mechanical integrity if:

(1) There is no significant leak in the casing, tubing or packer; and

(2) There is no significant fluid movement into an underground source of drinking water through vertical channels adjacent to the injection well bore.

(b) One of the following methods must be used to evaluate the absence of significant leaks under paragraph (a)(1) of this section:

(1) Following an initial pressure test, monitoring of the tubing-casing annulus pressure with sufficient frequency to be representative, as determined by the Director, while maintaining an annulus pressure different from atmospheric pressure measured at the surface;

(2) Pressure test with liquid or gas; or

(3) Records of monitoring showing the absence of significant changes in the relationship between injection pressure and injection flow rate for the following Class II enhanced recovery wells:

(i) Existing wells completed without a packer provided that a pressure test has been performed and the data is available and provided further that one pressure test shall be performed at a time when the well is shut down and if the running of such a test will not cause further loss of significant amounts of oil or gas; or

(ii) Existing wells constructed without a long string casing, but with surface casing which terminates at the base of fresh water provided that local geological and hydrological features allow such construction and provided further that the annular space shall be visually inspected. For these wells, the Director shall prescribe a monitoring program which will verify the absence

of significant fluid movement from the injection zone into an USDW.

(c) One of the following methods must be used to determine the absence of significant fluid movement under paragraph (a)(2) of this section:

(1) The results of a temperature or noise log; or

(2) For Class II only, cementing records demonstrating the presence of adequate cement to prevent such migration; or

(3) For Class III wells where the nature of the casing precludes the use of the logging techniques prescribed at paragraph (c)(1) of this section, cementing records demonstrating the presence of adequate cement to prevent such migration;

(4) For Class III wells where the Director elects to rely on cementing records to demonstrate the absence of significant fluid movement, the monitoring program prescribed by §146.33(b) shall be designed to verify the absence of significant fluid movement.

(d) The Director may allow the use of a test to demonstrate mechanical integrity other than those listed in paragraphs (b) and (c)(2) of this section with the written approval of the Administrator. To obtain approval, the Director shall submit a written request to the Administrator, which shall set forth the proposed test and all technical data supporting its use. The Administrator shall approve the request if it will reliably demonstrate the mechanical integrity of wells for which its use is proposed. Any alternate method approved by the Administrator shall be published in the FEDERAL REGISTER and may be used in all States unless its use is restricted at the time of approval by the Administrator.

(e) In conducting and evaluating the tests enumerated in this section or others to be allowed by the Director, the owner or operator and the Director shall apply methods and standards generally accepted in the industry. When the owner or operator reports the results of mechanical integrity tests to the Director, he shall include a description of the test(s) and the method(s) used. In making his/her evaluation, the Director shall review monitoring and other test data submitted since the previous evaluation.

(f) The Director may require additional or alternative tests if the results presented by the owner or operator under §146.8(e) are not satisfactory to the Director to demonstrate that there is no movement of fluid into or between USDWs resulting from the injection activity.

[45 FR 42500, June 24, 1980, as amended at 46 FR 43162, Aug. 27, 1981; 47 FR 4999, Feb. 3, 1982; 58 FR 63898, Dec. 3, 1993]

§146.9 Criteria for establishing permitting priorities.

In determining priorities for setting times for owners or operators to submit applications for authorization to inject under the procedures of §144.31 (a), (c), (g) or §144.22(f), the Director shall base these priorities upon consideration of the following factors:

(a) Injection wells known or suspected to be contaminating underground sources of drinking water;

(b) Injection wells known to be injecting fluids containing hazardous contaminants;

(c) Likelihood of contamination of underground sources of drinking water;

(d) Potentially affected population;

(e) Injection wells violating existing State requirements;

(f) Coordination with the issuance of permits required by other State or Federal permit programs;

(g) Age and depth of the injection well; and

(h) Expiration dates of existing State permits, if any.

(Clean Water Act, Safe Drinking Water Act, Clean Air Act, Resource Conservation and Recovery Act: 42 U.S.C. 6905, 6912, 6925, 6927, 6974)

[45 FR 42500, June 24, 1980, as amended at 48 FR 14293, Apr. 1, 1983]

§146.10 Plugging and abandoning Class I, II, III, IV, and V wells.

(a) Requirements for Class I, II and III wells. (1) Prior to abandoning Class I, II and III wells, the well shall be plugged with cement in a manner which will not allow the movement of fluids either into or between underground sources of drinking water. The Director may allow Class III wells to use other plugging materials if the Director is satisfied that such materials will prevent movement of fluids into or

between underground sources of drinking water.

(2) Placement of the cement plugs shall be accomplished by one of the following:

(i) The Balance method;

(ii) The Dump Bailer method;

(iii) The Two-Plug method; or

(iv) An alternative method approved by the Director, which will reliably provide a comparable level of protection to underground sources of drinking water.

(3) The well to be abandoned shall be in a state of static equilibrium with the mud weight equalized top to bottom, either by circulating the mud in the well at least once or by a comparable method prescribed by the Director, prior to the placement of the cement plug(s).

(4) The plugging and abandonment plan required in 40 CFR 144.51(o) and 144.52(a)(6) shall, in the case of a Class III project which underlies or is in an aquifer which has been exempted under § 146.04, also demonstrate adequate protection of USDWs. The Director shall prescribe aquifer cleanup and monitoring where he deems it necessary and feasible to insure adequate protection of USDWs.

(b) Requirements for Class IV wells. Prior to abandoning a Class IV well, the owner or operator shall close the well in accordance with 40 CFR 144.23(b).

(c) Requirements for Class V wells. (1) Prior to abandoning a Class V well, the owner or operator shall close the well in a manner that prevents the movement of fluid containing any contaminant into an underground source of drinking water, if the presence of that contaminant may cause a violation of any primary drinking water regulation under 40 CFR part 141 or may otherwise adversely affect the health of persons. Closure requirements for motor vehicle waste disposal wells and large-capacity cesspools are reiterated at § 144.89.

(2) The owner or operator shall dispose of or otherwise manage any soil, gravel, sludge, liquids, or other materials removed from or adjacent to the well in accordance with all applicable Federal, State, and local regulations and requirements.

[64 FR 68573, Dec. 7, 1999]

Subpart B—Criteria and Standards Applicable to Class I Wells

§ 146.11 Criteria and standards applicable to Class I nonhazardous wells.

This subpart establishes criteria and standards for underground injection control programs to regulate Class I nonhazardous wells.

[53 FR 28148, July 26, 1988]

§ 146.12 Construction requirements.

(a) All Class I wells shall be sited in such a fashion that they inject into a formation which is beneath the lowermost formation containing, within one quarter mile of the well bore, an underground source of drinking water.

(b) All Class I wells shall be cased and cemented to prevent the movement of fluids into or between underground sources of drinking water. The casing and cement used in the construction of each newly drilled well shall be designed for the life expectancy of the well. In determining and specifying casing and cementing requirements, the following factors shall be considered:

(1) Depth to the injection zone;

(2) Injection pressure, external pressure, internal pressure, and axial loading;

(3) Hole size;

(4) Size and grade of all casing strings (wall thickness, diameter, nominal weight, length, joint specification, and construction material);

(5) Corrosiveness of injected fluid, formation fluids, and temperatures;

(6) Lithology of injection and confining intervals; and

(7) Type or grade of cement.

(c) All Class I injection wells, except those municipal wells injecting noncorrosive wastes, shall inject fluids through tubing with a packer set immediately above the injection zone, or tubing with an approved fluid seal as an alternative. The tubing, packer, and fluid seal shall be designed for the expected service.

(1) The use of other alternatives to a packer may be allowed with the written approval of the Director. To obtain approval, the operator shall submit a written request to the Director, which shall set forth the proposed alternative and all technical data supporting its use. The Director shall approve the request if the alternative method will reliably provide a comparable level of protection to underground sources of drinking water. The Director may approve an alternative method solely for an individual well or for general use.

(2) In determining and specifying requirements for tubing, packer, or alternatives the following factors shall be considered:

(i) Depth of setting;

(ii) Characteristics of injection fluid (chemical content, corrosiveness, and density);

(iii) Injection pressure;

(iv) Annular pressure;

(v) Rate, temperature and volume of injected fluid; and

(vi) Size of casing.

(d) Appropriate logs and other tests shall be conducted during the drilling and construction of new Class I wells. A descriptive report interpreting the results of such logs and tests shall be prepared by a knowledgeable log analyst and submitted to the Director. At a minimum, such logs and tests shall include:

(1) Deviation checks on all holes constructed by first drilling a pilot hole, and then enlarging the pilot hole by reaming or another method. Such checks shall be at sufficiently frequent intervals to assure that vertical avenues for fluid migration in the form of diverging holes are not created during drilling.

(2) Such other logs and tests as may be needed after taking into account the availability of similar data in the area of the drilling site, the construction plan, and the need for additional information, that may arise from time to time as the construction of the well progresses. In determining which logs and tests shall be required, the following logs shall be considered for use in the following situations:

(i) For surface casing intended to protect underground sources of drinking water:

(A) Resistivity, spontaneous potential, and caliper logs before the casing is installed; and

(B) A cement bond, temperature, or density log after the casing is set and cemented.

(ii) For intermediate and long strings of casing intended to facilitate injection:

(A) Resistivity, spontaneous potential, porosity, and gamma ray logs before the casing is installed;

(B) Fracture finder logs; and

(C) A cement bond, temperature, or density log after the casing is set and cemented.

(e) At a minimum, the following information concerning the injection formation shall be determined or calculated for new Class I wells:

(1) Fluid pressure;

(2) Temperature;

(3) Fracture pressure;

(4) Other physical and chemical characteristics of the injection matrix; and

(5) Physical and chemical characteristics of the formation fluids.

[45 FR 42500, June 24, 1980, as amended at 46 FR 43162, Aug. 27, 1981]

§ 146.13 Operating, monitoring and reporting requirements.

(a) *Operating requirements.* Operating requirements shall at a minimum, specify that:

(1) Except during stimulation injection pressure at the wellhead shall not exceed a maximum which shall be calculated so as to assure that the pressure in the injection zone during injection does not initiate new fractures or propagate existing fractures in the injection zone. In no case shall injection pressure initiate fractures in the confining zone or cause the movement of injection or formation fluids into an underground source of drinking water.

(2) Injection between the outermost casing protecting underground sources of drinking water and the well bore is prohibited.

(3) Unless an alternative to a packer has been approved under § 146.12(c), the annulus between the tubing and the long string of casings shall be filled with a fluid approved by the Director and a pressure, also approved by the Director, shall be maintained on the annulus.

(b) *Monitoring requirements.* Monitoring requirements shall, at a minimum, include:

(1) The analysis of the injected fluids with sufficient frequency to yield representative data of their characteristics;

(2) Installation and use of continuous recording devices to monitor injection pressure, flow rate and volume, and the pressure on the annulus between the tubing and the long string of casing;

(3) A demonstration of mechanical integrity pursuant to §146.8 at least once every five years during the life of the well; and

(4) The type, number and location of wells within the area of review to be used to monitor any migration of fluids into and pressure in the underground sources of drinking water, the parameters to be measured and the frequency of monitoring.

(c) *Reporting requirements.* Reporting requirements shall, at a minimum, include:

(1) Quarterly reports to the Director on:

(i) The physical, chemical and other relevant characteristics of injection fluids;

(ii) Monthly average, maximum and minimum values for injection pressure, flow rate and volume, and annular pressure; and

(iii) The results of monitoring prescribed under paragraph (b)(4) of this section.

(2) Reporting the results, with the first quarterly report after the completion, of:

(i) Periodic tests of mechanical integrity;

(ii) Any other test of the injection well conducted by the permittee if required by the Director; and

(iii) Any well work over.

(d) *Ambient monitoring.* (1) Based on a site-specific assessment of the potential for fluid movement from the well or injection zone and on the potential value of monitoring wells to detect such movement, the Director shall require the owner or operator to develop a monitoring program. At a minimum, the Director shall require monitoring of the pressure buildup in the injection zone annually, including at a minimum, a shut down of the well for a time sufficient to conduct a valid observation of the pressure fall-off curve.

(2) When prescribing a monitoring system the Director may also require:

(i) Continuous monitoring for pressure changes in the first aquifer overlying the confining zone. When such a well is installed, the owner or operator shall, on a quarterly basis, sample the aquifer and analyze for constituents specified by the Director;

(ii) The use of indirect, geophysical techniques to determine the position of the waste front, the water quality in a formation designated by the Director, or to provide other site specific data;

(iii) Periodic monitoring of the ground water quality in the first aquifer overlying the injection zone;

(iv) Periodic monitoring of the ground water quality in the lowermost USDW; and

(v) Any additional monitoring necessary to determine whether fluids are moving into or between USDWs.

[45 FR 42500, June 24, 1980, as amended at 46 FR 43162, Aug. 27, 1981; 47 FR 32129, July 26, 1982; 53 FR 28148, July 26, 1988]

§146.14 Information to be considered by the Director.

This section sets forth the information which must be considered by the Director in authorizing Class I wells. For an existing or converted new Class I well the Director may rely on the existing permit file for those items of information listed below which are current and accurate in the file. For a newly drilled Class I well, the Director shall require the submission of all the information listed below. For both existing and new Class I wells certain maps, cross-sections, tabulations of wells within the area of review and other data may be included in the application by reference provided they are current, readily available to the Director (for example, in the permitting agency's files) and sufficiently identified to be retrieved. In cases where EPA issues the permit all the information in this section must be submitted to the Administrator.

(a) Prior to the issuance of a permit for an existing Class I well to operate or the construction or conversion of a new Class I well the Director shall consider the following:

(1) Information required in 40 CFR 144.31 and 144.31(g);

(2) A map showing the injection well(s) for which a permit is sought and the applicable area of review. Within the area of review, the map must show the number, or name, and location of all producing wells, dry holes, surface bodies of water, springs, mines (surface and subsurface), quarries, water wells and other pertinent surface features including residences and roads. The map should also show faults, if known or suspected. Only information of public record is required to be included on this map;

(3) A tabulation of data on all wells within the area of review which penetrate into the proposed injection zone. Such data shall include a description of each well's type, construction, date drilled, location, depth, record of plugging and/or completion, and any additional information the Director may require;

(4) Maps and cross sections indicating the general vertical and lateral limits of all underground sources of drinking water within the area of review, their position relative to the injection formation and the direction of water movement, where known, in each underground source of drinking water which may be affected by the proposed injection;

(5) Maps and cross sections detailing the geologic structure of the local area;

(6) Generalized maps and cross sections illustrating the regional geologic setting;

(7) Proposed operating data:

(i) Average and maximum daily rate and volume of the fluid to be injected;

(ii) Average and maximum injection pressure; and

(iii) Source and an analysis of the chemical, physical, radiological and biological characteristics of injection fluids;

(8) Proposed formation testing program to obtain an analysis of the chemical, physical and radiological characteristics of and other information on the receiving formation;

(9) Proposed stimulation program;

(10) Proposed injection procedure;

(11) Schematic or other appropriate drawings of the surface and subsurface construction details of the well.

(12) Contingency plans to cope with all shut-ins or well failures so as to prevent migration of fluids into any underground source of drinking water;

(13) Plans (including maps) for meeting the monitoring requirements in §146.13(b);

(14) For wells within the area of review which penetrate the injection zone but are not properly completed or plugged, the corrective action proposed to be taken under 40 CFR 144.55;

(15) Construction procedures including a cementing and casing program, logging procedures, deviation checks, and a drilling, testing, and coring program; and

(16) A certificate that the applicant has assured, through a performance bond or other appropriate means, the resources necessary to close, plug or abandon the well as required by 40 CFR 122.42(g).

(b) Prior to granting approval for the operation of a Class I well the Director shall consider the following information:

(1) All available logging and testing program data on the well;

(2) A demonstration of mechanical integrity pursuant to §146.8;

(3) The anticipated maximum pressure and flow rate at which the permittee will operate;

(4) The results of the formation testing program;

(5) The actual injection procedure;

(6) The compatibility of injected waste with fluids in the injection zone and minerals in both the injection zone and the confining zone; and

(7) The status of corrective action on defective wells in the area of review.

(c) Prior to granting approval for the plugging and abandonment of a Class I well the Director shall consider the following information:

(1) The type and number of plugs to be used;

(2) The placement of each plug including the elevation of the top and bottom;

(3) The type and grade and quantity of cement to be used;

(4) The method for placement of the plugs; and

(5) The procedure to be used to meet the requirement of § 146.10(c).

(Clean Water Act, Safe Drinking Water Act, Clean Air Act, Resource Conservation and Recovery Act: 42 U.S.C. 6905, 6912, 6925, 6927, 6974)

[45 FR 42500, June 24, 1980, as amended at 46 FR 43162, Aug. 27, 1981; 48 FR 14293, Apr. 1, 1983]

§ 146.15 Class I municipal disposal well alternative authorization in certain parts of Florida.

(a) Existing Class I municipal disposal wells in specific geographic regions as defined in paragraph (f) of this section may continue to inject without violating the regulatory prohibitions in Parts 144 and 146 of this chapter against the movement of injection or formation fluids into a USDW, provided that such wells meet the requirements of this section, even if the Director determines they have caused or may cause fluid movement into a USDW. Nothing in this section excuses such Class I municipal disposal wells from meeting all other applicable State and Federal requirements including 40 CFR 144.12(a).

(b) For purposes of this section, an existing Class I municipal disposal well is defined as a well for which a complete UIC construction permit application was received by the Director on or before December 22, 2005.

(c) For purposes of this section, the determination that a Class I municipal disposal well has caused or may cause movement of injection or formation fluids into a USDW may be made by the Director based on any relevant data available to him/her, including ground water monitoring data generated pursuant to regulatory requirements governing operation of Class I municipal disposal wells.

(d) In order for a Class I municipal disposal well to qualify for authorization to inject pursuant to paragraph (a) of this section, the Owner/Operator of that well shall:

(1) Develop and implement a pretreatment program that is no less stringent than the requirements of Chapter 62–625, Florida Administrative Code, or have no significant industrial users as defined in that chapter.

(2) Treat the injectate using secondary treatment in a manner that is no less stringent than the requirements of Florida Rule 62–600.420(1)(d), and using high-level disinfection in a manner that is no less stringent than the requirements of Florida Rule 62–600.440(5)(a)–(f), within five years after notification by the Director that the well has caused or may cause fluid movement into a USDW.

(e) Where the Director issued such notice for a well prior to December 22, 2005, in order for that well to qualify for authorization to inject pursuant to paragraph (a) of this section, the Owner/Operator shall:

(1) Develop and implement a pretreatment program that is no less stringent than the requirements of Chapter 62–625, Florida Administrative Code, or have no significant industrial users as defined in that chapter; and

(2) Treat the injectate using secondary treatment in a manner that is no less stringent than the requirements of Florida Rule 62–600.420(1)(d), and using high-level disinfection in a manner that is no less stringent than the requirements of Florida Rule 62–600.440(5)(a)–(f), within five years after December 22, 2005.

(f) Authorization to inject wastewater into existing Class I municipal disposal wells pursuant to this section is limited to Class I municipal disposal wells in Florida in the following counties: Brevard, Broward, Charlotte, Collier, Flagler, Glades, Hendry, Highlands, Hillsborough, Indian River, Lee, Manatee, Martin, Miami-Dade, Monroe, Okeechobee, Orange, Osceola, Palm Beach, Pinellas, St. Johns, St. Lucie, Sarasota, and Volusia.

[70 FR 70531, Nov. 22, 2005]

§ 146.16 Requirements for new Class I municipal wells in certain parts of Florida.

Prior to commencing injection, any Class I municipal disposal well in one of the counties identified in § 146.15(f) that is not an existing Class I municipal disposal well as defined in § 146.15(b) of this section shall meet all of the requirements for existing wells

seeking authorization to inject pursuant to § 146.15.

[70 FR 70532, Nov. 22, 2005]

Subpart C—Criteria and Standards Applicable to Class II Wells

§ 146.21 Applicability.

This subpart establishes criteria and standards for underground injection control programs to regulate Class II wells.

§ 146.22 Construction requirements.

(a) All new Class II wells shall be sited in such a fashion that they inject into a formation which is separated from any USDW by a confining zone that is free of known open faults or fractures within the area of review.

(b)(1) All Class II injection wells shall be cased and cemented to prevent movement of fluids into or between underground sources of drinking water. The casing and cement used in the construction of each newly drilled well shall be designed for the life expectancy of the well. In determining and specifying casing and cementing requirements, the following factors shall be considered:

(i) Depth to the injection zone;

(ii) Depth to the bottom of all USDWs; and

(iii) Estimated maximum and average injection pressures;

(2) In addition the Director may consider information on:

(i) Nature of formation fluids;

(ii) Lithology of injection and confining zones;

(iii) External pressure, internal pressure, and axial loading;

(iv) Hole size;

(v) Size and grade of all casing strings; and

(vi) Class of cement.

(c) The requirements in paragraph (b) of this section need not apply to existing or newly converted Class II wells located in existing fields if:

(1) Regulatory controls for casing and cementing existed for those wells at the time of drilling and those wells are in compliance with those controls; and

(2) Well injection will not result in the movement of fluids into an underground source of drinking water so as to create a significant risk to the health of persons.

(d) The requirements in paragraph (b) of this section need not apply to newly drilled wells in existing fields if;

(1) They meet the requirements of the State for casing and cementing applicable to that field at the time of submission of the State program to the Administrator; and

(2) Well injection will not result in the movement of fluids into an underground source of drinking water so as to create a significant risk to the health of persons.

(e) Where a State did not have regulatory controls for casing and cementing prior to the time of the submission of the State program to the Administrator, the Director need not apply the casing and cementing requirements in paragraph (b) of this section if he submits as a part of his application for primacy, an appropriate plan for casing and cementing of existing, newly converted, and newly drilled wells in existing fields, and the Administrator approves the plan.

(f) Appropriate logs and other tests shall be conducted during the drilling and construction of new Class II wells. A descriptive report interpreting the results of that portion of those logs and tests which specifically relate to (1) an USDW and the confining zone adjacent to it, and (2) the injection and adjacent formations shall be prepared by a knowledgeable log analyst and submitted to the director. At a minimum, these logs and tests shall include:

(1) Deviation checks on all holes constructed by first drilling a pilot hole and then enlarging the pilot hole, by reaming or another method. Such checks shall be at sufficiently frequent intervals to assure that vertical avenues for fluid movement in the form of diverging holes are not created during drilling.

(2) Such other logs and tests as may be needed after taking into account the availability of similar data in the area of the drilling site, the construction plan, and the need for additional information that may arise from time to time as the construction of the well progresses. In determining which logs

and tests shall be required the following shall be considered by the Director in setting logging and testing requirements:

(i) For surface casing intended to protect underground sources of drinking water in areas where the lithology has not been determined:

(A) Electric and caliper logs before casing is installed; and

(B) A cement bond, temperature, or density log after the casing is set and cemented.

(ii) for intermediate and long strings of casing intended to facilitate injection:

(A) Electric porosity and gamma ray logs before the casing is installed;

(B) Fracture finder logs; and

(C) A cement bond, temperature, or density log after the casing is set and cemented.

(g) At a minimum, the following information concerning the injection formation shall be determined or calculated for new Class II wells or projects:

(1) Fluid pressure;

(2) Estimated fracture pressure;

(3) Physical and chemical characteristics of the injection zone.

[45 FR 42500, June 24, 1980, as amended at 46 FR 43162, Aug. 27, 1981; 47 FR 5000, Feb. 3, 1982]

§ 146.23 Operating, monitoring, and reporting requirements.

(a) *Operating requirements.* Operating requirements shall, at a minimum, specify that:

(1) Injection pressure at the wellhead shall not exceed a maximum which shall be calculated so as to assure that the pressure during injection does not initiate new fractures or propagate existing fractures in the confining zone adjacent to the USDWs. In no case shall injection pressure cause the movement of injection or formation fluids into an underground source of drinking water

(2) Injection between the outermost casing protecting underground sources of drinking water and the well bore shall be prohibited.

(b) *Monitoring requirements.* Monitoring requirements shall, at a minimum, include:

(1) Monitoring of the nature of injected fluids at time intervals sufficiently frequent to yield data representative of their characteristics;

(2) Observation of injection pressure, flow rate, and cumulative volume at least with the following frequencies:

(i) Weekly for produced fluid disposal operations;

(ii) Monthly for enhanced recovery operations;

(iii) Daily during the injection of liquid hydrocarbons and injection for withdrawal of stored hydrocarbons; and

(iv) Daily during the injection phase of cyclic steam operations

And recording of one observation of injection pressure, flow rate and cumulative volume at reasonable intervals no greater than 30 days.

(3) A demonstration of mechanical integrity pursuant to § 146.8 at least once every five years during the life of the injection well;

(4) Maintenance of the results of all monitoring until the next permit review (see 40 CFR 144.52(a)(5)); and

(5) Hydrocarbon storage and enhanced recovery may be monitored on a field or project basis rather than on an individual well basis by manifold monitoring. Manifold monitoring may be used in cases of facilities consisting of more than one injection well, operating with a common manifold. Separate monitoring systems for each well are not required provided the owner/operator demonstrates that manifold monitoring is comparable to individual well monitoring.

(c) *Reporting requirements.* (1) Reporting requirements shall at a minimum include an annual report to the Director summarizing the results of monitoring required under paragraph (b) of this section. Such summary shall include monthly records of injected fluids, and any major changes in characteristics or sources of injected fluid. Previously submitted information may be included by reference.

(2) Owners or operators of hydrocarbon storage and enhanced recovery projects may report on a field or project basis rather than an individual

well basis where manifold monitoring is used.

(Clean Water Act, Safe Drinking Water Act, Clean Air Act, Resource Conservation and Recovery Act; 42 U.S.C. 6905, 6912, 6925, 6927, 6974)

[45 FR 42500, June 24, 1980, as amended at 46 FR 43162, Aug. 27, 1981; 47 FR 5000, Feb. 3, 1982; 48 FR 14293, Apr. 1, 1983; 48 FR 31404, July 8, 1983]

§ 146.24 Information to be considered by the Director.

This section sets forth the information which must be considered by the Director in authorizing Class II wells. Certain maps, cross-sections, tabulations of wells within the area of review, and other data may be included in the application by reference provided they are current, readily available to the Director (for example, in the permitting agency's files) and sufficiently identified to be retrieved. In cases where EPA issues the permit, all the information in this section is to be submitted to the Administrator.

(a) Prior to the issuance of a permit for an existing Class II well to operate or the construction or conversion of a new Class II well the Director shall consider the following:

(1) Information required in 40 CFR 144.31 and 144.31(g);

(2) A map showing the injection well or project area for which a permit is sought and the applicable area of review. Within the area of review, the map must show the number or name and location of all existing producing wells, injection wells, abandoned wells, dry holes, and water wells. The map may also show surface bodies of waters, mines (surface and subsurface), quarries and other pertinent surface features including residences and roads, and faults if known or suspended. Only information of public record and pertinent information known to the applicant is required to be included on this map. This requirement does not apply to existing Class II wells; and

(3) A tabulation of data reasonably available from public records or otherwise known to the applicant on all wells within the area of review included on the map required under paragraph (a)(2) of this section which penetrate the proposed injection zone or, in the case of Class II wells operating over the fracture pressure of the injection formation, all known wells within the area of review which penetrate formations affected by the increase in pressure. Such data shall include a description of each well's type, construction, date drilled, location, depth, record of plugging and complete, and any additional information the Director may require. In cases where the information would be repetitive and the wells are of similar age, type, and construction the Director may elect to only require data on a representative number of wells. This requirement does not apply to existing Class II wells.

(4) Proposed operating data:

(i) Average and maximum daily rate and volume of fluids to be injected.

(ii) Average and maximum injection pressure; and

(iii) Source and an appropriate analysis of the chemical and physical characteristics of the injection fluid.

(5) Appropriate geological data on the injection zone and confining zone including lithologic description, geological name, thickness and depth;

(6) Geologic name and depth to bottom of all underground sources of drinking water which may be affected by the injection;

(7) Schematic or other appropriate drawings of the surface and subsurface construction details of the well;

(8) In the case of new injection wells the corrective action proposed to be taken by the applicant under 40 CFR 122.44;

(9) A certificate that the applicant has assured through a performance bond or other appropriate means, the resources necessary to close plug or abandon the well as required by 40 CFR 122.42(g);

(b) In addition the Director may consider the following:

(1) Proposed formation testing program to obtain the information required by § 146.22(g);

(2) Proposed stimulation program;

(3) Proposed injection procedure;

(4) Proposed contingency plans, if any, to cope with well failures so as to prevent migration of contaminating fluids into an underground source of drinking water;

(5) Plans for meeting the monitoring requirements of § 146.23(b).

(c) Prior to granting approval for the operation of a Class II well the Director shall consider the following information:

(1) All available logging and testing program data on the well;

(2) A demonstration of mechanical integrity pursuant to § 146.8;

(3) The anticipated maximum pressure and flow rate at which the permittee will operate.

(4) The results of the formation testing program;

(5) The actual injection procedure; and

(6) For new wells the status of corrective action on defective wells in the area of review.

(d) Prior to granting approval for the plugging and abandonment of a Class II well the Director shall consider the following information:

(1) The type, and number of plugs to be used;

(2) The placement of each plug including the elevation of top and bottom;

(3) The type, grade, and quantity of cement to be used;

(4) The method of placement of the plugs; and

(5) The procedure to be used to meet the requirements of § 146.10(c).

(Clean Water Act, Safe Drinking Water Act, Clean Air Act, Resource Conservation and Recovery Act: 42 U.S.C. 6905, 6912, 6925, 6927, 6974)

[45 FR 42500, June 24, 1980, as amended at 46 FR 43162, Aug. 27, 1981; 47 FR 5000, Feb. 3, 1982; 48 FR 14293, Apr. 1, 1983]

Subpart D—Criteria and Standards Applicable to Class III Wells

§ 146.31 Applicability.

This subpart establishes criteria and standards for underground injection control programs to regulate Class III wells.

§ 146.32 Construction requirements.

(a) All new Class III wells shall be cased and cemented to prevent the migration of fluids into or between underground sources of drinking water. The Director may waive the cementing requirement for new wells in existing projects or portions of existing projects where he has substantial evidence that no contamination of underground sources of drinking water would result. The casing and cement used in the construction of each newly drilled well shall be designed for the life expectancy of the well. In determining and specifying casing and cementing requirements, the following factors shall be considered:

(1) Depth to the injection zone;

(2) Injection pressure, external pressure, internal pressure, axial loading, etc.;

(3) Hole size;

(4) Size and grade of all casing strings (wall thickness, diameter, nominal weight, length, joint specification, and construction material);

(5) Corrosiveness of injected fluids and formation fluids;

(6) Lithology of injection and confining zones; and

(7) Type and grade of cement.

(b) Appropriate logs and other tests shall be conducted during the drilling and construction of new Class III wells. A descriptive report interpreting the results of such logs and tests shall be prepared by a knowledgeable log analyst and submitted to the Director. The logs and tests appropriate to each type of Class III well shall be determined based on the intended function, depth, construction and other characteristics of the well, availability of similar data in the area of the drilling site and the need for additional information that may arise from time to time as the construction of the well progresses. Deviation checks shall be conducted on all holes where pilot holes and reaming are used, unless the hole will be cased and cemented by circulating cement to the surface. Where deviation checks are necessary they shall be conducted at sufficiently frequent intervals to assure that vertical avenues for fluid migration in the form of diverging holes are not created during drillings.

(c) Where the injection zone is a formation which is naturally water-bearing the following information concerning the injection zone shall be determined or calculated for new Class III wells or projects:

(1) Fluid pressure;

(2) Fracture pressure; and

(3) Physical and chemical characteristics of the formation fluids.

(d) Where the injection formation is not a water-bearing formation, the information in paragraph (c)(2) of this section must be submitted.

(e) Where injection is into a formation which contains water with less than 10,000 mg/l TDS monitoring wells shall be completed into the injection zone and into any underground sources of drinking water above the injection zone which could be affected by the mining operation. These wells shall be located in such a fashion as to detect any excursion of injection fluids, process by-products, or formation fluids outside the mining area or zone. If the operation may be affected by subsidence or catastrophic collapse the monitoring wells shall be located so that they will not be physically affected.

(f) Where injection is into a formation which does not contain water with less than 10,000 mg/l TDS, no monitoring wells are necessary in the injection stratum.

(g) Where the injection wells penetrate an USDW in an area subject to subsidence or catastrophic collapse an adequate number of monitoring wells shall be completed into the USDW to detect any movement of injected fluids, process by-products or formation fluids into the USDW. The monitoring wells shall be located outside the physical influence of the subsidence or catastrophic collapse.

(h) In determining the number, location, construction and frequency of monitoring of the monitoring wells the following criteria shall be considered:

(1) The population relying on the USDW affected or potentially affected by the injection operation;

(2) The proximity of the injection operation to points of withdrawal of drinking water;

(3) The local geology and hydrology;

(4) The operating pressures and whether a negative pressure gradient is being maintained;

(5) The nature and volume of the injected fluid, the formation water, and the process by-products; and

(6) The injection well density.

[45 FR 42500, June 24, 1980, as amended at 46 FR 43163, Aug. 27, 1981; 47 FR 5000, Feb. 3, 1982]

§ 146.33 Operating, monitoring, and reporting requirements.

(a) *Operating requirements.* Operating requirements prescribed shall, at a minimum, specify that:

(1) Except during well stimulation injection pressure at the wellhead shall be calculated so as to assure that the pressure in the injection zone during injection does not initiate new fractures or propagate existing fractures in the injection zone. In no case, shall injection pressure initiate fractures in the confining zone or cause the migration of injection or formation fluids into an underground source of drinking water.

(2) Injection between the outermost casing protecting underground sources of drinking water and the well bore is prohibited.

(b) *Monitoring requirements.* Monitoring requirements shall, at a minimum, specify:

(1) Monitoring of the nature of injected fluids with sufficient frequency to yield representative data on its characteristics. Whenever the injection fluid is modified to the extent that the analysis required by § 146.34(a)(7)(iii) is incorrect or incomplete, a new analysis as required by § 146.34(a)(7)(iii) shall be provided to the Director.

(2) Monitoring of injection pressure and either flow rate or volume semi-monthly, or metering and daily recording of injected and produced fluid volumes as appropriate.

(3) Demonstration of mechanical integrity pursuant to § 146.08 at least once every five years during the life of the well for salt solution mining.

(4) Monitoring of the fluid level in the injection zone semi-monthly, where appropriate and monitoring of the parameters chosen to measure water quality in the monitoring wells required by § 146.32(e), semi-monthly.

(5) Quarterly monitoring of wells required by § 146.32(g).

(6) All Class III wells may be monitored on a field or project basis rather than an individual well basis by manifold monitoring. Manifold monitoring may be used in cases of facilities consisting of more than one injection well, operating with a common manifold. Separate monitoring systems for each well are not required provided the

owner/operator demonstrates that manifold monitoring is comparable to individual well monitoring.

(c) *Reporting requirements.* Reporting requirements shall, at a minimum, include:

(1) Quarterly reporting to the Director on required monitoring;

(2) Results of mechanical integrity and any other periodic test required by the Director reported with the first regular quarterly report after the completion of the test; and

(3) Monitoring may be reported on a project or field basis rather than individual well basis where manifold monitoring is used.

[45 FR 42500, June 24, 1980, as amended at 46 FR 43163, Aug. 27, 1981; 46 FR 5001, Feb. 3, 1982; 48 FR 31404, July 8, 1983]

§ 146.34 Information to be considered by the Director.

This section sets forth the information which must be considered by the Director in authorizing Class III wells. Certain maps, cross sections, tabulations of wells within the area of review, and other data may be included in the application by reference provided they are current, readily available to the Director (for example, in the permitting agency's files) and sufficiently identified to be retrieved. In cases where EPA issues the permit, all the information in this section must be submitted to the Administrator.

(a) Prior to the issuance of a permit for an existing Class III well or area to operate or the construction of a new Class III well the Director shall consider the following:

(1) Information required in 40 CFR 144.31 and 144.31(g);

(2) A map showing the injection well or project area for which a permit is sought and the applicable area of review. Within the area of review, the map must show the number or name and location of all existing producing wells, injection wells, abandoned wells, dry holes, public water systems and water wells. The map may also show surface bodies of waters, mines (surface and subsurface), quarries and other pertinent surface features including residences and roads, and faults if known or suspected. Only information of public record and pertinent information known to the applicant is required to be included on this map.

(3) A tabulation of data reasonably available from public records or otherwise known to the applicant on wells within the area of review included on the map required under paragraph (a)(2) of this section which penetrate the proposed injection zone. Such data shall include a description of each well's type, construction, date drilled, location, depth, record of plugging and completion, and any additional information the Director may require. In cases where the information would be repetitive and the wells are of similar age, type, and construction the Director may elect to only require data on a representative number of wells.

(4) Maps and cross sections indicating the vertical limits of all underground sources of drinking water within the area of review, their position relative to the injection formation, and the direction of water movement, where known, in every underground source of drinking water which may be affected by the proposed injection:

(5) Maps and cross sections detailing the geologic structure of the local area;

(6) Generalized map and cross sections illustrating the regional geologic setting;

(7) Proposed operating data:

(i) Average and maximum daily rate and volume of fluid to be injected;

(ii) Average and maximum injection pressure; and

(iii) Qualitative analysis and ranges in concentrations of all constituents of injected fluids. The applicant may request Federal confidentiality as specified in 40 CFR part 2. If the information is proprietary an applicant may, in lieu of the ranges in concentrations, choose to submit maximum concentrations which shall not be exceeded. In such a case the applicant shall retain records of the undisclosed concentrations and provide them upon request to the Director as part of any enforcement investigation.

(8) Proposed formation testing program to obtain the information required by § 146.32(c).

(9) Proposed stimulation program;

(10) Proposed injection procedure;

(11) Schematic or other appropriate drawings of the surface and subsurface construction details of the well;

(12) Plans (including maps) for meeting the monitoring requirements of § 146.33(b);

(13) Expected changes in pressure, native fluid displacement, direction of movement of injection fluid;

(14) Contingency plans to cope with all shut-ins or well failures so as to prevent the migration of contaminating fluids into underground sources of drinking water;

(15) A certificate that the applicant has assured, through a performance bond, or other appropriate means, the resources necessary to close, plug, or abandon the well as required by 40 CFR 144.52(a)(7) and

(16) The corrective action proposed to be taken under 40 CFR 144.55.

(b) Prior to granting approval for the operation of a Class III well the Director shall consider the following information:

(1) All available logging and testing data on the well;

(2) A satisfactory demonstration of mechanical integrity for all new wells and for all existing salt solution wells pursuant to § 146.08;

(3) The anticipated maximum pressure and flow rate at which the permittee will operate;

(4) The results of the formation testing program;

(5) The actual injection procedures; and

(6) The status of corrective action on defective wells in the area of review.

(c) Prior to granting approval for the plugging and abandonment of a Class III well the Director shall consider the following information:

(1) The type and number of plugs to be used;

(2) The placement of each plug including the elevation of the top and bottom;

(3) The type, grade, and quantity of cement to be used;

(4) The method of placement of the plugs; and

(5) The procedure to be used to meet the requirements of § 146.10(c).

(Clean Water Act, Safe Drinking Water Act, Clean Air Act, Resource Conservation and Recovery Act: 42 U.S.C. 6905, 6912, 6925, 6927, 6974)

[45 FR 42500, June 24, 1980, as amended at 46 FR 43163, Aug. 27, 1981; 47 FR 5001, Feb. 3, 1982; 48 FR 14293, Apr. 1, 1983]

Subpart E—Criteria and Standards Applicable to Class IV Injection Wells [Reserved]

Subpart F—Criteria and Standards Applicable to Class V Injection Wells

§ 146.51 Applicability.

This subpart sets forth criteria and standards for underground injection control programs to regulate all injection not regulated in subparts B, C, D, and E.

(a) Generally, wells covered by this subpart inject non-hazardous fluids into or above formations that contain underground sources of drinking water. It includes all wells listed in § 146.5(e) but is not limited to those types of injection wells.

(b) It also includes wells not covered in Class IV that inject radioactive material listed in 10 CFR part 20, appendix B, table II, column 2.

[45 FR 42500, June 24, 1980, as amended at 47 FR 5001, Feb. 3, 1982]

Subpart G—Criteria and Standards Applicable to Class I Hazardous Waste Injection Wells

SOURCE: 53 FR 28148, July 26, 1988, unless otherwise noted.

§ 146.61 Applicability.

(a) This subpart establishes criteria and standards for underground injection control programs to regulate Class I hazardous waste injection wells. Unless otherwise noted this subpart supplements the requirements of subpart A and applies instead of subpart B to Class I hazardous waste injection wells.

(b) *Definitions.*

Cone of influence means that area around the well within which increased

injection zone pressures caused by injection into the hazardous waste injection well would be sufficient to drive fluids into an underground source of drinking water (USDW).

Existing well means a Class I well which was authorized prior to August 25, 1988, by an approved State program, or an EPA-administered program or a well which has become a Class I well as a result of a change in the definition of the injected waste which would render the waste hazardous under § 261.3 of this part.

Injection interval means that part of the injection zone in which the well is screened, or in which the waste is otherwise directly emplaced.

New well means any Class I hazardous waste injection well which is not an existing well.

Transmissive fault or fracture is a fault or fracture that has sufficient permeability and vertical extent to allow fluids to move between formations.

§ 146.62 Minimum criteria for siting.

(a) All Class I hazardous waste injection wells shall be sited such that they inject into a formation that is beneath the lowermost formation containing within one quarter mile of the well bore an underground source of drinking water.

(b) The siting of Class I hazardous waste injection wells shall be limited to areas that are geologically suitable. The Director shall determine geologic suitability based upon:

(1) An analysis of the structural and stratigraphic geology, the hydrogeology, and the seismicity of the region;

(2) An analysis of the local geology and hydrogeology of the well site, including, at a minimum, detailed information regarding stratigraphy, structure and rock properties, aquifer hydrodynamics and mineral resources; and

(3) A determination that the geology of the area can be described confidently and that limits of waste fate and transport can be accurately predicted through the use of models.

(c) Class I hazardous waste injection wells shall be sited such that:

(1) The injection zone has sufficient permeability, porosity, thickness and areal extent to prevent migration of fluids into USDWs.

(2) The confining zone:

(i) Is laterally continuous and free of transecting, transmissive faults or fractures over an area sufficient to prevenet the movement of fluids into a USDW; and

(ii) Contains at least one formation of sufficient thickness and with lithologic and stress characteristics capable of preventing vertical propagation of fractures.

(d) The owner or operator shall demonstrate to the satisfaction of the Director that:

(1) The confining zone is separated from the base of the lowermost USDW by at least one sequence of permeable and less permeable strata that will provide an added layer of protection for the USDW in the event of fluid movement in an unlocated borehole or transmissive fault; or

(2) Within the area of review, the piezometric surface of the fluid in the injection zone is less than the piezometric surface of the lowermost USDW, considering density effects, injection pressures and any significant pumping in the overlying USDW; or

(3) There is no USDW present.

(4) The Director may approve a site which does not meet the requirements in paragraphs (d) (1), (2), or (3) of this section if the owner or operator can demonstrate to the Director that because of the geology, nature of the waste, or other considerations, abandoned boreholes or other conduits would not cause endangerment of USDWs.

§ 146.63 Area of review.

For the purposes of Class I hazardous waste wells, this section shall apply to the exclusion of § 146.6. The area of review for Class I hazardous waste injection wells shall be a 2-mile radius around the well bore. The Director may specify a larger area of review based on the calculated cone of influence of the well.

§ 146.64 Corrective action for wells in the area of review.

For the purposes of Class I hazardous waste wells, this section shall apply to the exclusion of §§ 144.55 and 146.07.

(a) The owner or operator of a Class I hazardous waste well shall as part of the permit application submit a plan to the Director outlining the protocol used to:

(1) Identify all wells penetrating the confining zone or injection zone within the area of review; and

(2) Determine whether wells are adequately completed or plugged.

(b) The owner or operator of a Class I hazardous waste well shall identify the location of all wells within the area of review that penetrate the injection zone or the confining zone and shall submit as required in § 146.70(a):

(1) A tabulation of all wells within the area of review that penetrate the injection zone or the confining zone; and

(2) A description of each well or type of well and any records of its plugging or completion.

(c) For wells that the Director determines are improperly plugged, completed, or abandoned, or for which plugging or completion information is unavailable, the applicant shall also submit a plan consisting of such steps or modification as are necessary to prevent movement of fluids into or between USDWs. Where the plan is adequate, the Director shall incorporate it into the permit as a condition. Where the Director's review of an application indicates that the permittee's plan is inadequate (based at a minimum on the factors in paragraph (e) of this section), the Director shall:

(1) Require the applicant to revise the plan;

(2) Prescribe a plan for corrective action as a condition of the permit; or

(3) Deny the application.

(d) Requirements:

(1) Existing injection wells. Any permit issued for an existing Class I hazardous waste injection well requiring corrective action other than pressure limitations shall include a compliance schedule requiring any corrective action accepted or prescribed under paragraph (c) of this section. Any such compliance schedule shall provide for compliance no later than 2 years following issuance of the permit and shall require observance of appropriate pressure limitations under paragraph (d)(3) until all other corrective action measures have been implemented.

(2) New injection wells. No owner or operator of a new Class I hazardous waste injection well may begin injection until all corrective actions required under this section have been taken.

(3) The Director may require pressure limitations in lieu of plugging. If pressure limitations are used in lieu of plugging, the Director shall require as a permit condition that injection pressure be so limited that pressure in the injection zone at the site of any improperly completed or abandoned well within the area of review would not be sufficient to drive fluids into or between USDWs. This pressure limitation shall satisfy the corrective action requirement. Alternatively, such injection pressure limitation may be made part of a compliance schedule and may be required to be maintained until all other required corrective actions have been implemented.

(e) In determining the adequacy of corrective action proposed by the applicant under paragraph (c) of this section and in determining the additional steps needed to prevent fluid movement into and between USDWs, the following criteria and factors shall be considered by the Director:

(1) Nature and volume of injected fluid;

(2) Nature of native fluids or byproducts of injection;

(3) Geology;

(4) Hydrology;

(5) History of the injection operation;

(6) Completion and plugging records;

(7) Closure procedures in effect at the time the well was closed;

(8) Hydraulic connections with USDWs;

(9) Reliability of the procedures used to identify abandoned wells; and

(10) Any other factors which might affect the movement of fluids into or between USDWs.

§ 146.65 Construction requirements.

(a) *General.* All existing and new Class I hazardous waste injection wells shall be constructed and completed to:

(1) Prevent the movement of fluids into or between USDWs or into any unauthorized zones;

(2) Permit the use of appropriate testing devices and workover tools; and

(3) Permit continuous monitoring of injection tubing and long string casing as required pursuant to § 146.67(f).

(b) *Compatibility*. All well materials must be compatible with fluids with which the materials may be expected to come into contact. A well shall be deemed to have compatibility as long as the materials used in the construction of the well meet or exceed standards developed for such materials by the American Petroleum Institute, The American Society for Testing Materials, or comparable standards acceptable to the Director.

(c) *Casing and Cementing of New Wells*. (1) Casing and cement used in the construction of each newly drilled well shall be designed for the life expectancy of the well, including the post-closure care period. The casing and cementing program shall be designed to prevent the movement of fluids into or between USDWs, and to prevent potential leaks of fluids from the well. In determining and specifying casing and cementing requirements, the Director shall consider the following information as required by § 146.70:

(i) Depth to the injection zone;

(ii) Injection pressure, external pressure, internal pressure and axial loading;

(iii) Hole size;

(iv) Size and grade of all casing strings (well thickness, diameter, nominal weight, length, joint specification and construction material);

(v) Corrosiveness of injected fluid, formation fluids and temperature;

(vi) Lithology of injection and confining zones;

(vii) Type or grade of cement; and

(viii) Quantity and chemical composition of the injected fluid.

(2) One surface casing string shall, at a minimum, extend into the confining bed below the lowest formation that contains a USDW and be cemented by circulating cement from the base of the casing to the surface, using a minimum of 120% of the calculated annual volume. The Director may require more than 120% when the geology or other circumstances warrant it.

(3) At least one long string casing, using a sufficient number of centralizers, shall extend to the injection zone and shall be cemented by circulating cement to the surface in one or more stages:

(i) Of sufficient quantity and quality to withstand the maximum operating pressure; and

(ii) In a quantity no less than 120% of the calculated volume necessary to fill the annular space. The Director may require more than 120% when the geology or other circumstances warrant it.

(4) Circulation of cement may be accomplished by staging. The Director may approve an alternative method of cementing in cases where the cement cannot be recirculated to the surface, provided the owner or operator can demonstrate by using logs that the cement is continuous and does not allow fluid movement behind the well bore.

(5) Casings, including any casing connections, must be rated to have sufficient structural strength to withstand, for the design life of the well:

(i) The maximum burst and collapse pressures which may be experienced during the construction, operation and closure of the well; and

(ii) The maximum tensile stress which may be experienced at any point along the length of the casing during the construction, operation, and closure of the well.

(6) At a minimum, cement and cement additivies must be of sufficient quality and quantity to maintain integrity over the design life of the well.

(d) *Tubing and packer*. (1) All Class I hazardous waste injection wells shall inject fluids through tubing with a packer set at a point specified by the Director.

(2) In determining and specifying requirements for tubing and packer, the following factors shall be considered:

(i) Depth of setting;

(ii) Characteristics of injection fluid (chemical content, corrosiveness, temperature and density);

(iii) Injection pressure;

(iv) Annular pressure;

(v) Rate (intermittent or continuous), temperature and volume of injected fluid;

(vi) Size of casing; and

(vii) Tubing tensile, burst, and collapse strengths.

(3) The Director may approve the use of a fluid seal if he determines that the following conditions are met:

(i) The operator demonstrates that the seal will provide a level of protection comparable to a packer;

(ii) The operator demonstrates that the staff is, and will remain, adequately trained to operate and maintain the well and to identify and interpret variations in parameters of concern;

(iii) The permit contains specific limitations on variations in annular pressure and loss of annular fluid;

(iv) The design and construction of the well allows continuous monitoring of the annular pressure and mass balance of annular fluid; and

(v) A secondary system is used to monitor the interface between the annulus fluid and the injection fluid and the permit contains requirements for testing the system every three months and recording the results.

§ 146.66 Logging, sampling, and testing prior to new well operation.

(a) During the drilling and construction of a new Class I hazardous waste injection well, appropriate logs and tests shall be run to determine or verify the depth, thickness, porosity, permeability, and rock type of, and the salinity of any entrained fluids in, all relevant geologic units to assure conformance with performance standards in § 146.65, and to establish accurate baseline data against which future measurements may be compared. A descriptive report interpreting results of such logs and tests shall be prepared by a knowledgeable log analyst and submitted to the Director. At a minimum, such logs and tests shall include:

(1) Deviation checks during drilling on all holes constructed by drilling a pilot hole which are enlarged by reaming or another method. Such checks shall be at sufficiently frequent intervals to determine the location of the borehole and to assure that vertical avenues for fluid movement in the form of diverging holes are not created during drilling; and

(2) Such other logs and tests as may be needed after taking into account the availability of similar data in the area of the drilling site, the construction plan, and the need for additional information that may arise from time to time as the construction of the well progresses. At a minimum, the following logs shall be required in the following situations:

(i) Upon installation of the surface casing:

(A) Resistivity, spontaneous potential, and caliper logs before the casing is installed; and

(B) A cement bond and variable density log, and a temperature log after the casing is set and cemented.

(ii) Upon installation of the long string casing:

(A) Resistivity, spontaneous potential, porosity, caliper, gamma ray, and fracture finder logs before the casing is installed; and

(B) A cement bond and variable density log, and a temperature log after the casing is set and cemented.

(iii) The Director may allow the use of an alternative to the above logs when an alternative will provide equivalent or better information; and

(3) A mechanical integrity test consisting of:

(i) A pressure test with liquid or gas;

(ii) A radioactive tracer survey;

(iii) A temperature or noise log;

(iv) A casing inspection log, if required by the Director; and

(v) Any other test required by the Director.

(b) Whole cores or sidewall cores of the confining and injection zones and formation fluid samples from the injection zone shall be taken. The Director may accept cores from nearby wells if the owner or operator can demonstrate that core retrieval is not possible and that such cores are representative of conditions at the well. The Director may require the owner or operator to core other formations in the borehole.

(c) The fluid temperature, pH, conductivity, pressure and the static fluid level of the injection zone must be recorded.

(d) At a minimum, the following information concerning the injection and confining zones shall be determined or calculated for Class I hazardous waste injection wells:

(1) Fracture pressure;

(2) Other physical and chemical characteristics of the injection and confining zones; and

(3) Physical and chemical characteristics of the formation fluids in the injection zone.

(e) Upon completion, but prior to operation, the owner or operator shall conduct the following tests to verify hydrogeologic characteristics of the injection zone:

(1) A pump test; or

(2) Injectivity tests.

(f) The Director shall have the opportunity to witness all logging and testing by this subpart. The owner or operator shall submit a schedule of such activities to the Director 30 days prior to conducting the first test.

§ 146.67 Operating requirements.

(a) Except during stimulation, the owner or operator shall assure that injection pressure at the wellhead does not exceed a maximum which shall be calculated so as to assure that the pressure in the injection zone during injection does not initiate new fractures or propagate existing fractures in the injection zone. The owner or operator shall assure that the injection pressure does not initiate fractures or propagate existing fractures in the confining zone, nor cause the movement of injection or formation fluids into a USDW.

(b) Injection between the outermost casing protecting USDWs and the well bore is prohibited.

(c) The owner or operator shall maintain an annulus pressure that exceeds the operating injection pressure, unless the Director determines that such a requirement might harm the integrity of the well. The fluid in the annulus shall be noncorrosive, or shall contain a corrosion inhibitor.

(d) The owner or operator shall maintain mechanical integrity of the injection well at all times.

(e) Permit requirements for owners or operators of hazardous waste wells which inject wastes which have the potential to react with the injection formation to generate gases shall include:

(1) Conditions limiting the temperature, pH or acidity of the injected waste; and

(2) Procedures necessary to assure that pressure imbalances which might cause a backflow or blowout do not occur.

(f) The owner or operator shall install and use continuous recording devices to monitor: the injection pressure; the flow rate, volume, and temperature of injected fluids; and the pressure on the annulus between the tubing and the long string casing, and shall install and use:

(1) Automatic alarm and automatic shut-off systems, designed to sound and shut-in the well when pressures and flow rates or other parameters approved by the Director exceed a range and/or gradient specified in the permit; or

(2) Automatic alarms, designed to sound when the pressures and flow rates or other parameters approved by the Director exceed a rate and/or gradient specified in the permit, in cases where the owner or operator certifies that a trained operator will be on-site at all times when the well is operating.

(g) If an automatic alarm or shutdown is triggered, the owner or operator shall immediately investigate and identify as expeditiously as possible the cause of the alarm or shutoff. If, upon such investigation, the well appears to be lacking mechanical integrity, or if monitoring required under paragraph (f) of this section otherwise indicates that the well may be lacking mechanical integrity, the owner or operator shall:

(1) Cease injection of waste fluids unless authorized by the Director to continue or resume injection.

(2) Take all necessary steps to determine the presence or absence of a leak; and

(3) Notify the Director within 24 hours after the alarm or shutdown.

(h) If a loss of mechanical integrity is discovered pursuant to paragraph (g) of this section or during periodic mechanical integrity testing, the owner or operator shall:

(1) Immediately cease injection of waste fluids;

(2) Take all steps reasonably necessary to determine whether there may have been a release of hazardous wastes or hazardous waste constituents into any unauthorized zone;

(3) Notify the Director within 24 hours after loss of mechanical integrity is discovered;

(4) Notify the Director when injection can be expected to resume; and

(5) Restore and demonstrate mechanical integrity to the satisfaction of the Director prior to resuming injection of waste fluids.

(i) Whenever the owner or operator obtains evidence that there may have been a release of injected wastes into an unauthorized zone:

(1) The owner or operator shall immediately case injection of waste fluids, and:

(i) Notify the Director within 24 hours of obtaining such evidence;

(ii) Take all necessary steps to identify and characterize the extent of any release;

(iii) Comply with any remediation plan specified by the Director;

(iv) Implement any remediation plan approved by the Director; and

(v) Where such release is into a USDW currently serving as a water supply, place a notice in a newspaper of general circulation.

(2) The Director may allow the operator to resume injection prior to completing cleanup action if the owner or operator demonstrates that the injection operation will not endanger USDWs.

(j) The owner or operator shall notify the Director and obtain his approval prior to conducting any well workover.

§ 146.68 Testing and monitoring requirements.

Testing and monitoring requirements shall at a minimum include:

(a) Monitoring of the injected wastes. (1) The owner or operator shall develop and follow an approved written waste analysis plan that describes the procedures to be carried out to obtain a detailed chemical and physical analysis of a representative sample of the waste, including the quality assurance procedures used. At a minimum, the plan shall specify:

(i) The paramenters for which the waste will be analyzed and the rationale for the selection of these parameters;

(ii) The test methods that will be used to test for these parameters; and

(iii) The sampling method that will be used to obtain a representative sample of the waste to be analyzed.

(2) The owner or operator shall repeat the analysis of the injected wastes as described in the waste analysis plan at frequencies specified in the waste analysis plan and when process or operating changes occur that may significantly alter the characteristics of the waste stream.

(3) The owner or operator shall conduct continuous or periodic monitoring of selected parameters as required by the Director.

(4) The owner or operator shall assure that the plan remains accurate and the analyses remain representative.

(b) Hydrogeologic compatibility determination. The owner or operator shall submit information demonstrating to the satisfaction of the Director that the waste stream and its anticipated reaction products will not alter the permeability, thickness or other relevant characteristics of the confining or injection zones such that they would no longer meet the requirements specified in § 146.62.

(c) Compatibility of well materials. (1) The owner or operator shall demonstrate that the waste stream will be compatible with the well materials with which the waste is expected to come into contact, and submit to the Director a description of the methodology used to make that determination. Compatibility for purposes of this requirement is established if contact with injected fluids will not cause the well materials to fail to satisfy any design requirement imposed under § 146.65(b).

(2) The Director shall require continuous corrosion monitoring of the construction materials used in the well for wells injecting corrosive waste, and may require such monitoring for other waste, by:

(i) Placing coupons of the well construction materials in contact with the waste stream; or

(ii) Routing the waste stream through a loop constructed with the material used in the well; or

(iii) Using an alternative method approved by the Director.

(3) If a corrosion monitoring program is required:

(i) The test shall use materials identical to those used in the construction of the well, and such materials must be continuously exposed to the operating pressures and temperatures (measured at the well head) and flow rates of the injection operation; and

(ii) The owner or operator shall monitor the materials for loss of mass, thickness, cracking, pitting and other signs of corrosion on a quarterly basis to ensure that the well components meet the minimum standards for material strength and performance set forth in § 146.65(b).

(d) *Periodic mechanical integrity testing*. In fulfilling the requirements of § 146.8, the owner or operator of a Class I hazardous waste injection well shall conduct the mechanical integrity testing as follows:

(1) The long string casing, injection tube, and annular seal shall be tested by means of an approved pressure test with a liquid or gas annually and whenever there has been a well workover;

(2) The bottom-hole cement shall be tested by means of an approved radioactive tracer survey annually;

(3) An approved temperature, noise, or other approved log shall be run at least once every five years to test for movement of fluid along the borehole. The Director may require such tests whenever the well is worked over;

(4) Casing inspection logs shall be run whenever the owner or operator conducts a workover in which the injection string is pulled, unless the Director waives this requirement due to well construction or other factors which limit the test's reliability, or based upon the satisfactory results of a casing inspection log run within the previous five years. The Director may require that a casing inspection log be run every five years, if he has reason to believe that the integrity of the long string casing of the well may be adversely affected by naturally-occurring or man-made events;

(5) Any other test approved by the Director in accordance with the procedures in § 146.8(d) may also be used.

(e) *Ambient monitoring*. (1) Based on a site-specific assessment of the potential for fluid movement from the well or injection zone, and on the potential value of monitoring wells to detect such movement, the Director shall require the owner or operator to develop a monitoring program. At a minimum, the Director shall require monitoring of the pressure buildup in the injection zone annually, including at a minimum, a shut down of the well for a time sufficient to conduct a valid observation of the pressure fall-off curve.

(2) When prescribing a monitoring system the Director may also require:

(i) Continuous monitoring for pressure changes in the first aquifer overlying the confining zone. When such a well is installed, the owner or operator shall, on a quarterly basis, sample the aquifer and analyze for constituents specified by the Director;

(ii) The use of indirect, geophysical techniques to determine the position of the waste front, the water quality in a formation designated by the Director, or to provide other site specific data;

(iii) Periodic monitoring of the ground water quality in the first aquifer overlying the injection zone;

(iv) Periodic monitoring of the ground water quality in the lowermost USDW; and

(v) Any additional monitoring necessary to determine whether fluids are moving into or between USDWs.

(f) The Director may require seismicity monitoring when he has reason to believe that the injection activity may have the capacity to cause seismic disturbances.

[53 FR 28148, July 26, 1988, as amended at 57 FR 46294, Oct. 7, 1992]

§ 146.69 Reporting requirements.

Reporting requirements shall, at a minimum, include:

(a) Quarterly reports to the Director containing:

(1) The maximum injection pressure;

(2) A description of any event that exceeds operating parameters for annulus pressure or injection pressure as specified in the permit;

(3) A description of any event which triggers an alarm or shutdown device required pursuant to § 146.67(f) and the response taken;

(4) The total volume of fluid injected;

(5) Any change in the annular fluid volume;

(6) The physical, chemical and other relevant characteristics of injected fluids; and

(7) The results of monitoring prescribed under § 146.68.

(b) Reporting, within 30 days or with the next quarterly report whichever comes later, the results of:

(1) Periodic tests of mechanical integrity;

(2) Any other test of the injection well conducted by the permittee if required by the Director; and

(3) Any well workover.

§ 146.70 Information to be evaluated by the Director.

This section sets forth the information which must be evaluated by the Director in authorizing Class I hazardous waste injection wells. For a new Class I hazardous waste injection well, the owner or operator shall submit all the information listed below as part of the permit application. For an existing or converted Class I hazardous waste injection well, the owner or operator shall submit all information listed below as part of the permit application except for those items of information which are current, accurate, and available in the existing permit file. For both existing and new Class I hazardous waste injection wells, certain maps, cross-sections, tabulations of wells within the area of review and other data may be included in the application by reference provided they are current and readily available to the Director (for example, in the permitting agency's files) and sufficiently identifiable to be retrieved. In cases where EPA issues the permit, all the information in this section must be submitted to the Administrator or his designee.

(a) Prior to the issuance of a permit for an existing Class I hazardous waste injection well to operate or the construction or conversion of a new Class I hazardous waste injection well, the Director shall review the following to assure that the requirements of this part and part 144 are met:

(1) Information required in § 144.31;

(2) A map showing the injection well for which a permit is sought and the applicable area of review. Within the area of review, the map must show the number or name and location of all producing wells, injection wells, abandoned wells, dry holes, surface bodies of water, springs, mines (surface and subsurface), quarries, water wells and other pertinent surface features, including residences and roads. The map should also show faults, if known or suspected;

(3) A tabulation of all wells within the area of review which penetrate the proposed injection zone or confining zone. Such data shall include a description of each well's type, construction, date drilled, location, depth, record of plugging and/or completion and any additional information the Director may require;

(4) The protocol followed to identify, locate and ascertain the condition of abandoned wells within the area of review which penetrate the injection or the confining zones;

(5) Maps and cross-sections indicating the general vertical and lateral limits of all underground sources of drinking water within the area of review, their position relative to the injection formation and the direction of water movement, where known, in each underground source of drinking water which may be affected by the proposed injection;

(6) Maps and cross-sections detailing the geologic structure of the local area;

(7) Maps and cross-sections illustrating the regional geologic setting;

(8) Proposed operating data;

(i) Average and maximum daily rate and volume of the fluid to be injected; and

(ii) Average and maximum injection pressure;

(9) Proposed formation testing program to obtain an analysis of the chemical, physical and radiological characteristics of and other information on the injection formation and the confining zone;

(10) Proposed stimulation program;

(11) Proposed injection procedure;

(12) Schematic or other appropriate drawings of the surface and subsurface construction details of the well;

(13) Contingency plans to cope with all shut-ins or well failures so as to prevent migration of fluids into any USDW;

(14) Plans (including maps) for meeting monitoring requirements of § 146.68;

(15) For wells within the area of review which penetrate the injection zone or the confining zone but are not properly completed or plugged, the corrective action to be taken under § 146.64;

(16) Construction procedures including a cementing and casing program, well materials specifications and their life expectancy, logging procedures, deviation checks, and a drilling, testing and coring program; and

(17) A demonstration pursuant to part 144, subpart F, that the applicant has the resources necessary to close, plug or abandon the well and for post-closure care.

(b) Prior to the Director's granting approval for the operation of a Class I hazardous waste injection well, the owner or operator shall submit and the Director shall review the following information, which shall be included in the completion report:

(1) All available logging and testing program data on the well;

(2) A demonstration of mechanical integrity pursuant to § 146.68;

(3) The anticipated maximum pressure and flow rate at which the permittee will operate;

(4) The results of the injection zone and confining zone testing program as required in § 146.70(a)(9);

(5) The actual injection procedure;

(6) The compatibility of injected waste with fluids in the injection zone and minerals in both the injection zone and the confining zone and with the materials used to construct the well;

(7) The calculated area of review based on data obtained during logging and testing of the well and the formation, and where necessary revisions to the information submitted under § 146.70(a) (2) and (3).

(8) The status of corrective action on wells identified in § 146.70(a)(15).

(c) Prior to granting approval for the plugging and abandonment (*i.e.*, closure) of a Class I hazardous waste injection well, the Director shall review the information required in §§ 146.71(a)(4) and 146.72(a).

(d) Any permit issued for a Class I hazardous waste injection well for disposal on the premises where the waste is generated shall contain a certification by the owner or operator that:

(1) The generator of the hazardous waste has a program to reduce the volume or quantity and toxicity of such waste to the degree determined by the generator to be economically practicable; and

(2) Injection of the waste is that practicable method of disposal currently available to the generator which minimizes the present and future threat to human health and the environment.

§ 146.71 Closure.

(a) *Closure Plan*. The owner or operator of a Class I hazardous waste injection well shall prepare, maintain, and comply with a plan for closure of the well that meets the requirements of paragraph (d) of this section and is acceptable to the Director. The obligation to implement the closure plan survives the termination of a permit or the cessation of injection activities. The requirement to maintain and implement an approved plan is directly enforceable regardless of whether the requirement is a condition of the permit.

(1) The owner or operator shall submit the plan as a part of the permit application and, upon approval by the Director, such plan shall be a condition of any permit issued.

(2) The owner or operator shall submit any proposed significant revision to the method of closure reflected in the plan for approval by the Director no later than the date on which notice of closure is required to be submitted to the Director under paragraph (b) of this section.

(3) The plan shall assure financial responsibility as required in § 144.52(a)(7).

(4) The plan shall include the following information:

(i) The type and number of plugs to be used;

(ii) The placement of each plug including the elevation of the top and bottom of each plug;

(iii) The type and grade and quantity of material to be used in plugging;

(iv) The method of placement of the plugs;

(v) Any proposed test or measure to be made;

(vi) The amount, size, and location (by depth) of casing and any other materials to be left in the well;

(vii) The method and location where casing is to be parted, if applicable;

(viii) The procedure to be used to meet the requirements of paragraph (d)(5) of this section;

(ix) The estimated cost of closure; and

(x) Any proposed test or measure to be made.

(5) The Director may modify a closure plan following the procedures of § 124.5.

(6) An owner or operator of a Class I hazardous waste injection well who ceases injection temporarily, may keep the well open provided he:

(i) Has received authorization from the Director; and

(ii) Has described actions or procedures, satisfactory to the Director, that the owner or operator will take to ensure that the well will not endanger USDWs during the period of temporary disuse. These actions and procedures shall include compliance with the technical requirements applicable to active injection wells unless waived by the Director.

(7) The owner or operator of a well that has ceased operations for more than two years shall notify the Director 30 days prior to resuming operation of the well.

(b) *Notice of intent to close.* The owner or operator shall notify the Director at least 60 days before closure of a well. At the discretion of the Director, a shorter notice period may be allowed.

(c) *Closure report.* Within 60 days after closure or at the time of the next quarterly report (whichever is less) the owner or operator shall submit a closure report to the Director. If the quarterly report is due less than 15 days after completion of closure, then the report shall be submitted within 60 days after closure. The report shall be certified as accurate by the owner or operator and by the person who performed the closure operation (if other than the owner or operator). Such report shall consist of either:

(1) A statement that the well was closed in accordance with the closure plan previously submitted and approved by the Director; or

(2) Where actual closure differed from the plan previously submitted, a written statement specifying the differences between the previous plan and the actual closure.

(d) *Standards for well closure.* (1) Prior to closing the well, the owner or operator shall observe and record the pressure decay for a time specified by the Director. The Director shall analyze the pressure decay and the transient pressure observations conducted pursuant to § 146.68(e)(1)(i) and determine whether the injection activity has conformed with predicted values.

(2) Prior to well closure, appropriate mechanical integrity testing shall be conducted to ensure the integrity of that portion of the long string casing and cement that will be left in the ground after closure. Testing methods may include:

(i) Pressure tests with liquid or gas;

(ii) Radioactive tracer surveys;

(iii) Noise, temperature, pipe evaluation, or cement bond logs; and

(iv) Any other test required by the Director.

(3) Prior to well closure, the well shall be flushed with a buffer fluid.

(4) Upon closure, a Class I hazardous waste well shall be plugged with cement in a manner that will not allow the movement of fluids into or between USDWs.

(5) Placement of the cement plugs shall be accomplished by one of the following:

(i) The Balance Method;

(ii) The Dump Bailer Method;

(iii) The Two-Plug Method; or

(iv) An alternate method, approved by the Director, that will reliably provide a comparable level of protection.

(6) Each plug used shall be appropriately tagged and tested for seal and stability before closure is completed.

(7) The well to be closed shall be in a state of static equilibrium with the mud weight equalized top to bottom, either by circulating the mud in the well at least once or by a comparable method prescribed by the Director, prior to the placement of the cement plug(s).

§ 146.72 Post-closure care.

(a) The owner or operator of a Class I hazardous waste well shall prepare,

maintain, and comply with a plan for post-closure care that meets the requirements of paragraph (b) of this section and is acceptable to the Director. The obligation to implement the post-closure plan survives the termination of a permit or the cessation of injection activities. The requirement to maintain an approved plan is directly enforceable regardless of whether the requirement is a condition of the permit.

(1) The owner or operator shall submit the plan as a part of the permit application and, upon approval by the Director, such plan shall be a condition of any permit issued.

(2) The owner or operator shall submit any proposed significant revision to the plan as appropriate over the life of the well, but no later than the date of the closure report required under § 146.71(c).

(3) The plan shall assure financial responsibility as required in § 146.73.

(4) The plan shall include the following information:

(i) The pressure in the injection zone before injection began;

(ii) The anticipated pressure in the injection zone at the time of closure;

(iii) The predicted time until pressure in the injection zone decays to the point that the well's cone of influence no longer intersects the base of the lowermost USDW;

(iv) Predicted position of the waste front at closure;

(v) The status of any cleanups required under § 146.64; and

(vi) The estimated cost of proposed post-closure care.

(5) At the request of the owner or operator, or on his own initiative, the Director may modify the post-closure plan after submission of the closure report following the procedures in § 124.5.

(b) The owner or operator shall:

(1) Continue and complete any cleanup action required under § 146.64, if applicable;

(2) Continue to conduct any groundwater monitoring required under the permit until pressure in the injection zone decays to the point that the well's cone of influence no longer intersects the base of the lowermost USDW. The Director may extend the period of post-closure monitoring if he determines that the well may endanger a USDW.

(3) Submit a survey plat to the local zoning authority designated by the Director. The plat shall indicate the location of the well relative to permanently surveyed benchmarks. A copy of the plat shall be submitted to the Regional Administrator of the appropriate EPA Regional Office.

(4) Provide appropriate notification and information to such State and local authorities as have cognizance over drilling activities to enable such State and local authorities to impose appropriate conditions on subsequent drilling activities that may penetrate the well's confining or injection zone.

(5) Retain, for a period of three years following well closure, records reflecting the nature, composition and volume of all injected fluids. The Director shall require the owner or operator to deliver the records to the Director at the conclusion of the retention period, and the records shall thereafter be retained at a location designated by the Director for that purpose.

(c) Each owner of a Class I hazardous waste injection well, and the owner of the surface or subsurface property on or in which a Class I hazardous waste injection well is located, must record a notation on the deed to the facility property or on some other instrument which is normally examined during title search that will in perpetuity provide any potential purchaser of the property the following information:

(1) The fact that land has been used to manage hazardous waste;

(2) The name of the State agency or local authority with which the plat was filed, as well as the address of the Regional Environmental Protection Agency Office to which it was submitted;

(3) The type and volume of waste injected, the injection interval or intervals into which it was injected, and the period over which injection occurred.

§ 146.73 Financial responsibility for post-closure care.

The owner or operator shall demonstrate and maintain financial responsibility for post-closure by using a

trust fund, surety bond, letter of credit, financial test, insurance or corporate guarantee that meets the specifications for the mechanisms and instruments revised as appropriate to cover closure and post-closure care in 40 CFR part 144, subpart F. The amount of the funds available shall be no less than the amount identified in §146.72(a)(4)(vi). The obligation to maintain financial responsibility for post-closure care survives the termination of a permit or the cessation of injection. The requirement to maintain financial responsibility is enforceable regardless of whether the requirement is a condition of the permit.

Subpart H—Criteria and Standards Applicable to Class VI Wells

SOURCE: 75 FR 77291, Dec. 10, 2010, unless otherwise noted.

§146.81 Applicability.

(a) This subpart establishes criteria and standards for underground injection control programs to regulate any Class VI carbon dioxide geologic sequestration injection wells.

(b) This subpart applies to any wells used to inject carbon dioxide specifically for the purpose of geologic sequestration, *i.e.,* the long-term containment of a gaseous, liquid, or supercritical carbon dioxide stream in subsurface geologic formations.

(c) This subpart also applies to owners or operators of permit- or rule-authorized Class I, Class II, or Class V experimental carbon dioxide injection projects who seek to apply for a Class VI geologic sequestration permit for their well or wells. Owners or operators seeking to convert existing Class I, Class II, or Class V experimental wells to Class VI geologic sequestration wells must demonstrate to the Director that the wells were engineered and constructed to meet the requirements at §146.86(a) and ensure protection of USDWs, in lieu of requirements at §§146.86(b) and 146.87(a). By December 10, 2011, owners or operators of either Class I wells previously permitted for the purpose of geologic sequestration or Class V experimental technology wells no longer being used for experimental purposes that will continue injection of carbon dioxide for the purpose of GS must apply for a Class VI permit. A converted well must still meet all other requirements under part 146.

(d) *Definitions.* The following definitions apply to this subpart. To the extent that these definitions conflict with those in §144.3 or §146.3 of this chapter these definitions govern for Class VI wells:

Area of review means the region surrounding the geologic sequestration project where USDWs may be endangered by the injection activity. The area of review is delineated using computational modeling that accounts for the physical and chemical properties of all phases of the injected carbon dioxide stream and displaced fluids, and is based on available site characterization, monitoring, and operational data as set forth in §146.84.

Carbon dioxide plume means the extent underground, in three dimensions, of an injected carbon dioxide stream.

Carbon dioxide stream means carbon dioxide that has been captured from an emission source (e.g., a power plant), plus incidental associated substances derived from the source materials and the capture process, and any substances added to the stream to enable or improve the injection process. This subpart does not apply to any carbon dioxide stream that meets the definition of a hazardous waste under 40 CFR part 261.

Confining zone means a geologic formation, group of formations, or part of a formation stratigraphically overlying the injection zone(s) that acts as barrier to fluid movement. For Class VI wells operating under an injection depth waiver, confining zone means a geologic formation, group of formations, or part of a formation stratigraphically overlying and underlying the injection zone(s).

Corrective action means the use of Director-approved methods to ensure that wells within the area of review do not serve as conduits for the movement of fluids into underground sources of drinking water (USDW).

Geologic sequestration means the long-term containment of a gaseous, liquid, or supercritical carbon dioxide stream in subsurface geologic formations. This

term does not apply to carbon dioxide capture or transport.

Geologic sequestration project means an injection well or wells used to emplace a carbon dioxide stream beneath the lowermost formation containing a USDW; or, wells used for geologic sequestration of carbon dioxide that have been granted a waiver of the injection depth requirements pursuant to requirements at § 146.95; or, wells used for geologic sequestration of carbon dioxide that have received an expansion to the areal extent of an existing Class II enhanced oil recovery or enhanced gas recovery aquifer exemption pursuant to §§ 146.4 and 144.7(d) of this chapter. It includes the subsurface three-dimensional extent of the carbon dioxide plume, associated area of elevated pressure, and displaced fluids, as well as the surface area above that delineated region.

Injection zone means a geologic formation, group of formations, or part of a formation that is of sufficient areal extent, thickness, porosity, and permeability to receive carbon dioxide through a well or wells associated with a geologic sequestration project.

Post-injection site care means appropriate monitoring and other actions (including corrective action) needed following cessation of injection to ensure that USDWs are not endangered, as required under § 146.93.

Pressure front means the zone of elevated pressure that is created by the injection of carbon dioxide into the subsurface. For the purposes of this subpart, the pressure front of a carbon dioxide plume refers to a zone where there is a pressure differential sufficient to cause the movement of injected fluids or formation fluids into a USDW.

Site closure means the point/time, as determined by the Director following the requirements under § 146.93, at which the owner or operator of a geologic sequestration site is released from post-injection site care responsibilities.

Transmissive fault or fracture means a fault or fracture that has sufficient permeability and vertical extent to allow fluids to move between formations.

§ 146.82 Required Class VI permit information.

This section sets forth the information which must be considered by the Director in authorizing Class VI wells. For converted Class I, Class II, or Class V experimental wells, certain maps, cross-sections, tabulations of wells within the area of review and other data may be included in the application by reference provided they are current, readily available to the Director, and sufficiently identified to be retrieved. In cases where EPA issues the permit, all the information in this section must be submitted to the Regional Administrator.

(a) Prior to the issuance of a permit for the construction of a new Class VI well or the conversion of an existing Class I, Class II, or Class V well to a Class VI well, the owner or operator shall submit, pursuant to § 146.91(e), and the Director shall consider the following:

(1) Information required in § 144.31(e)(1) through (6) of this chapter;

(2) A map showing the injection well for which a permit is sought and the applicable area of review consistent with § 146.84. Within the area of review, the map must show the number or name, and location of all injection wells, producing wells, abandoned wells, plugged wells or dry holes, deep stratigraphic boreholes, State- or EPA-approved subsurface cleanup sites, surface bodies of water, springs, mines (surface and subsurface), quarries, water wells, other pertinent surface features including structures intended for human occupancy, State, Tribal, and Territory boundaries, and roads. The map should also show faults, if known or suspected. Only information of public record is required to be included on this map;

(3) Information on the geologic structure and hydrogeologic properties of the proposed storage site and overlying formations, including:

(i) Maps and cross sections of the area of review;

(ii) The location, orientation, and properties of known or suspected faults and fractures that may transect the confining zone(s) in the area of review and a determination that they would not interfere with containment;

(iii) Data on the depth, areal extent, thickness, mineralogy, porosity, permeability, and capillary pressure of the injection and confining zone(s); including geology/facies changes based on field data which may include geologic cores, outcrop data, seismic surveys, well logs, and names and lithologic descriptions;

(iv) Geomechanical information on fractures, stress, ductility, rock strength, and in situ fluid pressures within the confining zone(s);

(v) Information on the seismic history including the presence and depth of seismic sources and a determination that the seismicity would not interfere with containment; and

(vi) Geologic and topographic maps and cross sections illustrating regional geology, hydrogeology, and the geologic structure of the local area.

(4) A tabulation of all wells within the area of review which penetrate the injection or confining zone(s). Such data must include a description of each well's type, construction, date drilled, location, depth, record of plugging and/or completion, and any additional information the Director may require;

(5) Maps and stratigraphic cross sections indicating the general vertical and lateral limits of all USDWs, water wells and springs within the area of review, their positions relative to the injection zone(s), and the direction of water movement, where known;

(6) Baseline geochemical data on subsurface formations, including all USDWs in the area of review;

(7) Proposed operating data for the proposed geologic sequestration site:

(i) Average and maximum daily rate and volume and/or mass and total anticipated volume and/or mass of the carbon dioxide stream;

(ii) Average and maximum injection pressure;

(iii) The source(s) of the carbon dioxide stream; and

(iv) An analysis of the chemical and physical characteristics of the carbon dioxide stream.

(8) Proposed pre-operational formation testing program to obtain an analysis of the chemical and physical characteristics of the injection zone(s) and confining zone(s) and that meets the requirements at § 146.87;

(9) Proposed stimulation program, a description of stimulation fluids to be used and a determination that stimulation will not interfere with containment;

(10) Proposed procedure to outline steps necessary to conduct injection operation;

(11) Schematics or other appropriate drawings of the surface and subsurface construction details of the well;

(12) Injection well construction procedures that meet the requirements of § 146.86;

(13) Proposed area of review and corrective action plan that meets the requirements under § 146.84;

(14) A demonstration, satisfactory to the Director, that the applicant has met the financial responsibility requirements under § 146.85;

(15) Proposed testing and monitoring plan required by § 146.90;

(16) Proposed injection well plugging plan required by § 146.92(b);

(17) Proposed post-injection site care and site closure plan required by § 146.93(a);

(18) At the Director's discretion, a demonstration of an alternative post-injection site care timeframe required by § 146.93(c);

(19) Proposed emergency and remedial response plan required by § 146.94(a);

(20) A list of contacts, submitted to the Director, for those States, Tribes, and Territories identified to be within the area of review of the Class VI project based on information provided in paragraph (a)(2) of this section; and

(21) Any other information requested by the Director.

(b) The Director shall notify, in writing, any States, Tribes, or Territories within the area of review of the Class VI project based on information provided in paragraphs (a)(2) and (a)(20) of this section of the permit application and pursuant to the requirements at § 145.23(f)(13) of this chapter.

(c) Prior to granting approval for the operation of a Class VI well, the Director shall consider the following information:

(1) The final area of review based on modeling, using data obtained during logging and testing of the well and the formation as required by paragraphs

(c)(2), (3), (4), (6), (7), and (10) of this section;

(2) Any relevant updates, based on data obtained during logging and testing of the well and the formation as required by paragraphs (c)(3), (4), (6), (7), and (10) of this section, to the information on the geologic structure and hydrogeologic properties of the proposed storage site and overlying formations, submitted to satisfy the requirements of paragraph (a)(3) of this section;

(3) Information on the compatibility of the carbon dioxide stream with fluids in the injection zone(s) and minerals in both the injection and the confining zone(s), based on the results of the formation testing program, and with the materials used to construct the well;

(4) The results of the formation testing program required at paragraph (a)(8) of this section;

(5) Final injection well construction procedures that meet the requirements of § 146.86;

(6) The status of corrective action on wells in the area of review;

(7) All available logging and testing program data on the well required by § 146.87;

(8) A demonstration of mechanical integrity pursuant to § 146.89;

(9) Any updates to the proposed area of review and corrective action plan, testing and monitoring plan, injection well plugging plan, post-injection site care and site closure plan, or the emergency and remedial response plan submitted under paragraph (a) of this section, which are necessary to address new information collected during logging and testing of the well and the formation as required by all paragraphs of this section, and any updates to the alternative post-injection site care timeframe demonstration submitted under paragraph (a) of this section, which are necessary to address new information collected during the logging and testing of the well and the formation as required by all paragraphs of this section; and

(10) Any other information requested by the Director.

(d) Owners or operators seeking a waiver of the requirement to inject below the lowermost USDW must also refer to § 146.95 and submit a supplemental report, as required at § 146.95(a). The supplemental report is not part of the permit application.

§ 146.83 Minimum criteria for siting.

(a) Owners or operators of Class VI wells must demonstrate to the satisfaction of the Director that the wells will be sited in areas with a suitable geologic system. The owners or operators must demonstrate that the geologic system comprises:

(1) An injection zone(s) of sufficient areal extent, thickness, porosity, and permeability to receive the total anticipated volume of the carbon dioxide stream;

(2) Confining zone(s) free of transmissive faults or fractures and of sufficient areal extent and integrity to contain the injected carbon dioxide stream and displaced formation fluids and allow injection at proposed maximum pressures and volumes without initiating or propagating fractures in the confining zone(s).

(b) The Director may require owners or operators of Class VI wells to identify and characterize additional zones that will impede vertical fluid movement, are free of faults and fractures that may interfere with containment, allow for pressure dissipation, and provide additional opportunities for monitoring, mitigation, and remediation.

§ 146.84 Area of review and corrective action.

(a) The area of review is the region surrounding the geologic sequestration project where USDWs may be endangered by the injection activity. The area of review is delineated using computational modeling that accounts for the physical and chemical properties of all phases of the injected carbon dioxide stream and is based on available site characterization, monitoring, and operational data.

(b) The owner or operator of a Class VI well must prepare, maintain, and comply with a plan to delineate the area of review for a proposed geologic sequestration project, periodically reevaluate the delineation, and perform

corrective action that meets the requirements of this section and is acceptable to the Director. The requirement to maintain and implement an approved plan is directly enforceable regardless of whether the requirement is a condition of the permit. As a part of the permit application for approval by the Director, the owner or operator must submit an area of review and corrective action plan that includes the following information:

(1) The method for delineating the area of review that meets the requirements of paragraph (c) of this section, including the model to be used, assumptions that will be made, and the site characterization data on which the model will be based;

(2) A description of:

(i) The minimum fixed frequency, not to exceed five years, at which the owner or operator proposes to reevaluate the area of review;

(ii) The monitoring and operational conditions that would warrant a reevaluation of the area of review prior to the next scheduled reevaluation as determined by the minimum fixed frequency established in paragraph (b)(2)(i) of this section.

(iii) How monitoring and operational data (e.g., injection rate and pressure) will be used to inform an area of review reevaluation; and

(iv) How corrective action will be conducted to meet the requirements of paragraph (d) of this section, including what corrective action will be performed prior to injection and what, if any, portions of the area of review will have corrective action addressed on a phased basis and how the phasing will be determined; how corrective action will be adjusted if there are changes in the area of review; and how site access will be guaranteed for future corrective action.

(c) Owners or operators of Class VI wells must perform the following actions to delineate the area of review and identify all wells that require corrective action:

(1) Predict, using existing site characterization, monitoring and operational data, and computational modeling, the projected lateral and vertical migration of the carbon dioxide plume and formation fluids in the subsurface from the commencement of injection activities until the plume movement ceases, until pressure differentials sufficient to cause the movement of injected fluids or formation fluids into a USDW are no longer present, or until the end of a fixed time period as determined by the Director. The model must:

(i) Be based on detailed geologic data collected to characterize the injection zone(s), confining zone(s) and any additional zones; and anticipated operating data, including injection pressures, rates, and total volumes over the proposed life of the geologic sequestration project;

(ii) Take into account any geologic heterogeneities, other discontinuities, data quality, and their possible impact on model predictions; and

(iii) Consider potential migration through faults, fractures, and artificial penetrations.

(2) Using methods approved by the Director, identify all penetrations, including active and abandoned wells and underground mines, in the area of review that may penetrate the confining zone(s). Provide a description of each well's type, construction, date drilled, location, depth, record of plugging and/or completion, and any additional information the Director may require; and

(3) Determine which abandoned wells in the area of review have been plugged in a manner that prevents the movement of carbon dioxide or other fluids that may endanger USDWs, including use of materials compatible with the carbon dioxide stream.

(d) Owners or operators of Class VI wells must perform corrective action on all wells in the area of review that are determined to need corrective action, using methods designed to prevent the movement of fluid into or between USDWs, including use of materials compatible with the carbon dioxide stream, where appropriate.

(e) At the minimum fixed frequency, not to exceed five years, as specified in the area of review and corrective action plan, or when monitoring and operational conditions warrant, owners or operators must:

(1) Reevaluate the area of review in the same manner specified in paragraph (c)(1) of this section;

(2) Identify all wells in the reevaluated area of review that require corrective action in the same manner specified in paragraph (c) of this section;

(3) Perform corrective action on wells requiring corrective action in the reevaluated area of review in the same manner specified in paragraph (d) of this section; and

(4) Submit an amended area of review and corrective action plan or demonstrate to the Director through monitoring data and modeling results that no amendment to the area of review and corrective action plan is needed. Any amendments to the area of review and corrective action plan must be approved by the Director, must be incorporated into the permit, and are subject to the permit modification requirements at § 144.39 or § 144.41 of this chapter, as appropriate.

(f) The emergency and remedial response plan (as required by § 146.94) and the demonstration of financial responsibility (as described by § 146.85) must account for the area of review delineated as specified in paragraph (c)(1) of this section or the most recently evaluated area of review delineated under paragraph (e) of this section, regardless of whether or not corrective action in the area of review is phased.

(g) All modeling inputs and data used to support area of review reevaluations under paragraph (e) of this section shall be retained for 10 years.

§ 146.85 Financial responsibility.

(a) The owner or operator must demonstrate and maintain financial responsibility as determined by the Director that meets the following conditions:

(1) The financial responsibility instrument(s) used must be from the following list of qualifying instruments:

(i) Trust Funds.

(ii) Surety Bonds.

(iii) Letter of Credit.

(iv) Insurance.

(v) Self Insurance (*i.e.*, Financial Test and Corporate Guarantee).

(vi) Escrow Account.

(vii) Any other instrument(s) satisfactory to the Director.

(2) The qualifying instrument(s) must be sufficient to cover the cost of:

(i) Corrective action (that meets the requirements of § 146.84);

(ii) Injection well plugging (that meets the requirements of § 146.92);

(iii) Post injection site care and site closure (that meets the requirements of § 146.93); and

(iv) Emergency and remedial response (that meets the requirements of § 146.94).

(3) The financial responsibility instrument(s) must be sufficient to address endangerment of underground sources of drinking water.

(4) The qualifying financial responsibility instrument(s) must comprise protective conditions of coverage.

(i) Protective conditions of coverage must include at a minimum cancellation, renewal, and continuation provisions, specifications on when the provider becomes liable following a notice of cancellation if there is a failure to renew with a new qualifying financial instrument, and requirements for the provider to meet a minimum rating, minimum capitalization, and ability to pass the bond rating when applicable.

(A) *Cancellation*—for purposes of this part, an owner or operator must provide that their financial mechanism may not cancel, terminate or fail to renew except for failure to pay such financial instrument. If there is a failure to pay the financial instrument, the financial institution may elect to cancel, terminate, or fail to renew the instrument by sending notice by certified mail to the owner or operator and the Director. The cancellation must not be final for 120 days after receipt of cancellation notice. The owner or operator must provide an alternate financial responsibility demonstration within 60 days of notice of cancellation, and if an alternate financial responsibility demonstration is not acceptable (or possible), any funds from the instrument being cancelled must be released within 60 days of notification by the Director.

(B) *Renewal*—for purposes of this part, owners or operators must renew all financial instruments, if an instrument expires, for the entire term of the

geologic sequestration project. The instrument may be automatically renewed as long as the owner or operator has the option of renewal at the face amount of the expiring instrument. The automatic renewal of the instrument must, at a minimum, provide the holder with the option of renewal at the face amount of the expiring financial instrument.

(C) Cancellation, termination, or failure to renew may not occur and the financial instrument will remain in full force and effect in the event that on or before the date of expiration: The Director deems the facility abandoned; or the permit is terminated or revoked or a new permit is denied; or closure is ordered by the Director or a U.S. district court or other court of competent jurisdiction; or the owner or operator is named as debtor in a voluntary or involuntary proceeding under Title 11 (Bankruptcy), U.S. Code; or the amount due is paid.

(5) The qualifying financial responsibility instrument(s) must be approved by the Director.

(i) The Director shall consider and approve the financial responsibility demonstration for all the phases of the geologic sequestration project prior to issue a Class VI permit (§ 146.82).

(ii) The owner or operator must provide any updated information related to their financial responsibility instrument(s) on an annual basis and if there are any changes, the Director must evaluate, within a reasonable time, the financial responsibility demonstration to confirm that the instrument(s) used remain adequate for use. The owner or operator must maintain financial responsibility requirements regardless of the status of the Director's review of the financial responsibility demonstration.

(iii) The Director may disapprove the use of a financial instrument if he determines that it is not sufficient to meet the requirements of this section.

(6) The owner or operator may demonstrate financial responsibility by using one or multiple qualifying financial instruments for specific phases of the geologic sequestration project.

(i) In the event that the owner or operator combines more than one instrument for a specific geologic sequestration phase (e.g., well plugging), such combination must be limited to instruments that are not based on financial strength or performance (*i.e.*, self insurance or performance bond), for example trust funds, surety bonds guaranteeing payment into a trust fund, letters of credit, escrow account, and insurance. In this case, it is the combination of mechanisms, rather than the single mechanism, which must provide financial responsibility for an amount at least equal to the current cost estimate.

(ii) When using a third-party instrument to demonstrate financial responsibility, the owner or operator must provide a proof that the third-party providers either have passed financial strength requirements based on credit ratings; or has met a minimum rating, minimum capitalization, and ability to pass the bond rating when applicable.

(iii) An owner or operator using certain types of third-party instruments must establish a standby trust to enable EPA to be party to the financial responsibility agreement without EPA being the beneficiary of any funds. The standby trust fund must be used along with other financial responsibility instruments (e.g., surety bonds, letters of credit, or escrow accounts) to provide a location to place funds if needed.

(iv) An owner or operator may deposit money to an escrow account to cover financial responsibility requirements; this account must segregate funds sufficient to cover estimated costs for Class VI (geologic sequestration) financial responsibility from other accounts and uses.

(v) An owner or operator or its guarantor may use self insurance to demonstrate financial responsibility for geologic sequestration projects. In order to satisfy this requirement the owner or operator must meet a Tangible Net Worth of an amount approved by the Director, have a Net working capital and tangible net worth each at least six times the sum of the current well plugging, post injection site care and site closure cost, have assets located in the United States amounting to at least 90 percent of total assets or at least six times the sum of the current well plugging, post injection site care and site closure cost, and must

submit a report of its bond rating and financial information annually. In addition the owner or operator must either: Have a bond rating test of AAA, AA, A, or BBB as issued by Standard & Poor's or Aaa, Aa, A, or Baa as issued by Moody's; or meet all of the following five financial ratio thresholds: A ratio of total liabilities to net worth less than 2.0; a ratio of current assets to current liabilities greater than 1.5; a ratio of the sum of net income plus depreciation, depletion, and amortization to total liabilities greater than 0.1; A ratio of current assets minus current liabilities to total assets greater than −0.1; and a net profit (revenues minus expenses) greater than 0.

(vi) An owner or operator who is not able to meet corporate financial test criteria may arrange a corporate guarantee by demonstrating that its corporate parent meets the financial test requirements on its behalf. The parent's demonstration that it meets the financial test requirement is insufficient if it has not also guaranteed to fulfill the obligations for the owner or operator.

(vii) An owner or operator may obtain an insurance policy to cover the estimated costs of geologic sequestration activities requiring financial responsibility. This insurance policy must be obtained from a third party provider.

(b) The requirement to maintain adequate financial responsibility and resources is directly enforceable regardless of whether the requirement is a condition of the permit.

(1) The owner or operator must maintain financial responsibility and resources until:

(i) The Director receives and approves the completed post-injection site care and site closure plan; and

(ii) The Director approves site closure.

(2) The owner or operator may be released from a financial instrument in the following circumstances:

(i) The owner or operator has completed the phase of the geologic sequestration project for which the financial instrument was required and has fulfilled all its financial obligations as determined by the Director, including obtaining financial responsibility for the next phase of the GS project, if required; or

(ii) The owner or operator has submitted a replacement financial instrument and received written approval from the Director accepting the new financial instrument and releasing the owner or operator from the previous financial instrument.

(c) The owner or operator must have a detailed written estimate, in current dollars, of the cost of performing corrective action on wells in the area of review, plugging the injection well(s), post-injection site care and site closure, and emergency and remedial response.

(1) The cost estimate must be performed for each phase separately and must be based on the costs to the regulatory agency of hiring a third party to perform the required activities. A third party is a party who is not within the corporate structure of the owner or operator.

(2) During the active life of the geologic sequestration project, the owner or operator must adjust the cost estimate for inflation within 60 days prior to the anniversary date of the establishment of the financial instrument(s) used to comply with paragraph (a) of this section and provide this adjustment to the Director. The owner or operator must also provide to the Director written updates of adjustments to the cost estimate within 60 days of any amendments to the area of review and corrective action plan (§ 146.84), the injection well plugging plan (§ 146.92), the post-injection site care and site closure plan (§ 146.93), and the emergency and remedial response plan (§ 146.94).

(3) The Director must approve any decrease or increase to the initial cost estimate. During the active life of the geologic sequestration project, the owner or operator must revise the cost estimate no later than 60 days after the Director has approved the request to modify the area of review and corrective action plan (§ 146.84), the injection well plugging plan (§ 146.92), the post-injection site care and site closure plan (§ 146.93), and the emergency and response plan (§ 146.94), if the change in the plan increases the cost. If the change to the plans decreases the cost,

any withdrawal of funds must be approved by the Director. Any decrease to the value of the financial assurance instrument must first be approved by the Director. The revised cost estimate must be adjusted for inflation as specified at paragraph (c)(2) of this section.

(4) Whenever the current cost estimate increases to an amount greater than the face amount of a financial instrument currently in use, the owner or operator, within 60 days after the increase, must either cause the face amount to be increased to an amount at least equal to the current cost estimate and submit evidence of such increase to the Director, or obtain other financial responsibility instruments to cover the increase. Whenever the current cost estimate decreases, the face amount of the financial assurance instrument may be reduced to the amount of the current cost estimate only after the owner or operator has received written approval from the Director.

(d) The owner or operator must notify the Director by certified mail of adverse financial conditions such as bankruptcy that may affect the ability to carry out injection well plugging and post-injection site care and site closure.

(1) In the event that the owner or operator or the third party provider of a financial responsibility instrument is going through a bankruptcy, the owner or operator must notify the Director by certified mail of the commencement of a voluntary or involuntary proceeding under Title 11 (Bankruptcy), U.S. Code, naming the owner or operator as debtor, within 10 days after commencement of the proceeding.

(2) A guarantor of a corporate guarantee must make such a notification to the Director if he/she is named as debtor, as required under the terms of the corporate guarantee.

(3) An owner or operator who fulfills the requirements of paragraph (a) of this section by obtaining a trust fund, surety bond, letter of credit, escrow account, or insurance policy will be deemed to be without the required financial assurance in the event of bankruptcy of the trustee or issuing institution, or a suspension or revocation of the authority of the trustee institution to act as trustee of the institution issuing the trust fund, surety bond, letter of credit, escrow account, or insurance policy. The owner or operator must establish other financial assurance within 60 days after such an event.

(e) The owner or operator must provide an adjustment of the cost estimate to the Director within 60 days of notification by the Director, if the Director determines during the annual evaluation of the qualifying financial responsibility instrument(s) that the most recent demonstration is no longer adequate to cover the cost of corrective action (as required by § 146.84), injection well plugging (as required by § 146.92), post-injection site care and site closure (as required by § 146.93), and emergency and remedial response (as required by § 146.94).

(f) The Director must approve the use and length of pay-in-periods for trust funds or escrow accounts.

§ 146.86 Injection well construction requirements.

(a) *General*. The owner or operator must ensure that all Class VI wells are constructed and completed to:

(1) Prevent the movement of fluids into or between USDWs or into any unauthorized zones;

(2) Permit the use of appropriate testing devices and workover tools; and

(3) Permit continuous monitoring of the annulus space between the injection tubing and long string casing.

(b) *Casing and cementing of Class VI wells*. (1) Casing and cement or other materials used in the construction of each Class VI well must have sufficient structural strength and be designed for the life of the geologic sequestration project. All well materials must be compatible with fluids with which the materials may be expected to come into contact and must meet or exceed standards developed for such materials by the American Petroleum Institute, ASTM International, or comparable standards acceptable to the Director. The casing and cementing program must be designed to prevent the movement of fluids into or between USDWs. In order to allow the Director to determine and specify casing and cementing requirements, the owner or operator

must provide the following information:

(i) Depth to the injection zone(s);

(ii) Injection pressure, external pressure, internal pressure, and axial loading;

(iii) Hole size;

(iv) Size and grade of all casing strings (wall thickness, external diameter, nominal weight, length, joint specification, and construction material);

(v) Corrosiveness of the carbon dioxide stream and formation fluids;

(vi) Down-hole temperatures;

(vii) Lithology of injection and confining zone(s);

(viii) Type or grade of cement and cement additives; and

(ix) Quantity, chemical composition, and temperature of the carbon dioxide stream.

(2) Surface casing must extend through the base of the lowermost USDW and be cemented to the surface through the use of a single or multiple strings of casing and cement.

(3) At least one long string casing, using a sufficient number of centralizers, must extend to the injection zone and must be cemented by circulating cement to the surface in one or more stages.

(4) Circulation of cement may be accomplished by staging. The Director may approve an alternative method of cementing in cases where the cement cannot be recirculated to the surface, provided the owner or operator can demonstrate by using logs that the cement does not allow fluid movement behind the well bore.

(5) Cement and cement additives must be compatible with the carbon dioxide stream and formation fluids and of sufficient quality and quantity to maintain integrity over the design life of the geologic sequestration project. The integrity and location of the cement shall be verified using technology capable of evaluating cement quality radially and identifying the location of channels to ensure that USDWs are not endangered.

(c) *Tubing and packer.* (1) Tubing and packer materials used in the construction of each Class VI well must be compatible with fluids with which the materials may be expected to come into contact and must meet or exceed standards developed for such materials by the American Petroleum Institute, ASTM International, or comparable standards acceptable to the Director.

(2) All owners or operators of Class VI wells must inject fluids through tubing with a packer set at a depth opposite a cemented interval at the location approved by the Director.

(3) In order for the Director to determine and specify requirements for tubing and packer, the owner or operator must submit the following information:

(i) Depth of setting;

(ii) Characteristics of the carbon dioxide stream (chemical content, corrosiveness, temperature, and density) and formation fluids;

(iii) Maximum proposed injection pressure;

(iv) Maximum proposed annular pressure;

(v) Proposed injection rate (intermittent or continuous) and volume and/or mass of the carbon dioxide stream;

(vi) Size of tubing and casing; and

(vii) Tubing tensile, burst, and collapse strengths.

§ 146.87 Logging, sampling, and testing prior to injection well operation.

(a) During the drilling and construction of a Class VI injection well, the owner or operator must run appropriate logs, surveys and tests to determine or verify the depth, thickness, porosity, permeability, and lithology of, and the salinity of any formation fluids in all relevant geologic formations to ensure conformance with the injection well construction requirements under § 146.86 and to establish accurate baseline data against which future measurements may be compared. The owner or operator must submit to the Director a descriptive report prepared by a knowledgeable log analyst that includes an interpretation of the results of such logs and tests. At a minimum, such logs and tests must include:

(1) Deviation checks during drilling on all holes constructed by drilling a pilot hole which is enlarged by reaming or another method. Such checks must be at sufficiently frequent intervals to determine the location of the borehole and to ensure that vertical avenues for

fluid movement in the form of diverging holes are not created during drilling; and

(2) Before and upon installation of the surface casing:

(i) Resistivity, spontaneous potential, and caliper logs before the casing is installed; and

(ii) A cement bond and variable density log to evaluate cement quality radially, and a temperature log after the casing is set and cemented.

(3) Before and upon installation of the long string casing:

(i) Resistivity, spontaneous potential, porosity, caliper, gamma ray, fracture finder logs, and any other logs the Director requires for the given geology before the casing is installed; and

(ii) A cement bond and variable density log, and a temperature log after the casing is set and cemented.

(4) A series of tests designed to demonstrate the internal and external mechanical integrity of injection wells, which may include:

(i) A pressure test with liquid or gas;

(ii) A tracer survey such as oxygen-activation logging;

(iii) A temperature or noise log;

(iv) A casing inspection log; and

(5) Any alternative methods that provide equivalent or better information and that are required by and/or approved of by the Director.

(b) The owner or operator must take whole cores or sidewall cores of the injection zone and confining system and formation fluid samples from the injection zone(s), and must submit to the Director a detailed report prepared by a log analyst that includes: Well log analyses (including well logs), core analyses, and formation fluid sample information. The Director may accept information on cores from nearby wells if the owner or operator can demonstrate that core retrieval is not possible and that such cores are representative of conditions at the well. The Director may require the owner or operator to core other formations in the borehole.

(c) The owner or operator must record the fluid temperature, pH, conductivity, reservoir pressure, and static fluid level of the injection zone(s).

(d) At a minimum, the owner or operator must determine or calculate the following information concerning the injection and confining zone(s):

(1) Fracture pressure;

(2) Other physical and chemical characteristics of the injection and confining zone(s); and

(3) Physical and chemical characteristics of the formation fluids in the injection zone(s).

(e) Upon completion, but prior to operation, the owner or operator must conduct the following tests to verify hydrogeologic characteristics of the injection zone(s):

(1) A pressure fall-off test; and,

(2) A pump test; or

(3) Injectivity tests.

(f) The owner or operator must provide the Director with the opportunity to witness all logging and testing by this subpart. The owner or operator must submit a schedule of such activities to the Director 30 days prior to conducting the first test and submit any changes to the schedule 30 days prior to the next scheduled test.

§ 146.88 Injection well operating requirements.

(a) Except during stimulation, the owner or operator must ensure that injection pressure does not exceed 90 percent of the fracture pressure of the injection zone(s) so as to ensure that the injection does not initiate new fractures or propagate existing fractures in the injection zone(s). In no case may injection pressure initiate fractures in the confining zone(s) or cause the movement of injection or formation fluids that endangers a USDW. Pursuant to requirements at § 146.82(a)(9), all stimulation programs must be approved by the Director as part of the permit application and incorporated into the permit.

(b) Injection between the outermost casing protecting USDWs and the well bore is prohibited.

(c) The owner or operator must fill the annulus between the tubing and the long string casing with a non-corrosive fluid approved by the Director. The owner or operator must maintain on the annulus a pressure that exceeds the operating injection pressure, unless the Director determines that such requirement might harm the integrity of the well or endanger USDWs.

(d) Other than during periods of well workover (maintenance) approved by the Director in which the sealed tubing-casing annulus is disassembled for maintenance or corrective procedures, the owner or operator must maintain mechanical integrity of the injection well at all times.

(e) The owner or operator must install and use:

(1) Continuous recording devices to monitor: The injection pressure; the rate, volume and/or mass, and temperature of the carbon dioxide stream; and the pressure on the annulus between the tubing and the long string casing and annulus fluid volume; and

(2) Alarms and automatic surface shut-off systems or, at the discretion of the Director, down-hole shut-off systems (e.g., automatic shut-off, check valves) for onshore wells or, other mechanical devices that provide equivalent protection; and

(3) Alarms and automatic down-hole shut-off systems for wells located offshore but within State territorial waters, designed to alert the operator and shut-in the well when operating parameters such as annulus pressure, injection rate, or other parameters diverge beyond permitted ranges and/or gradients specified in the permit.

(f) If a shutdown (*i.e.*, down-hole or at the surface) is triggered or a loss of mechanical integrity is discovered, the owner or operator must immediately investigate and identify as expeditiously as possible the cause of the shutoff. If, upon such investigation, the well appears to be lacking mechanical integrity, or if monitoring required under paragraph (e) of this section otherwise indicates that the well may be lacking mechanical integrity, the owner or operator must:

(1) Immediately cease injection;

(2) Take all steps reasonably necessary to determine whether there may have been a release of the injected carbon dioxide stream or formation fluids into any unauthorized zone;

(3) Notify the Director within 24 hours;

(4) Restore and demonstrate mechanical integrity to the satisfaction of the Director prior to resuming injection; and

(5) Notify the Director when injection can be expected to resume.

§ 146.89 Mechanical integrity.

(a) A Class VI well has mechanical integrity if:

(1) There is no significant leak in the casing, tubing, or packer; and

(2) There is no significant fluid movement into a USDW through channels adjacent to the injection well bore.

(b) To evaluate the absence of significant leaks under paragraph (a)(1) of this section, owners or operators must, following an initial annulus pressure test, continuously monitor injection pressure, rate, injected volumes; pressure on the annulus between tubing and long-string casing; and annulus fluid volume as specified in § 146.88 (e);

(c) At least once per year, the owner or operator must use one of the following methods to determine the absence of significant fluid movement under paragraph (a)(2) of this section:

(1) An approved tracer survey such as an oxygen-activation log; or

(2) A temperature or noise log.

(d) If required by the Director, at a frequency specified in the testing and monitoring plan required at § 146.90, the owner or operator must run a casing inspection log to determine the presence or absence of corrosion in the long-string casing.

(e) The Director may require any other test to evaluate mechanical integrity under paragraphs (a)(1) or (a)(2) of this section. Also, the Director may allow the use of a test to demonstrate mechanical integrity other than those listed above with the written approval of the Administrator. To obtain approval for a new mechanical integrity test, the Director must submit a written request to the Administrator setting forth the proposed test and all technical data supporting its use. The Administrator may approve the request if he or she determines that it will reliably demonstrate the mechanical integrity of wells for which its use is proposed. Any alternate method approved by the Administrator will be published in the FEDERAL REGISTER and may be used in all States in accordance with applicable State law unless its use is restricted at the time of approval by the Administrator.

(f) In conducting and evaluating the tests enumerated in this section or others to be allowed by the Director, the owner or operator and the Director must apply methods and standards generally accepted in the industry. When the owner or operator reports the results of mechanical integrity tests to the Director, he/she shall include a description of the test(s) and the method(s) used. In making his/her evaluation, the Director must review monitoring and other test data submitted since the previous evaluation.

(g) The Director may require additional or alternative tests if the results presented by the owner or operator under paragraphs (a) through (d) of this section are not satisfactory to the Director to demonstrate that there is no significant leak in the casing, tubing, or packer, or to demonstrate that there is no significant movement of fluid into a USDW resulting from the injection activity as stated in paragraphs (a)(1) and (2) of this section.

§ 146.90 Testing and monitoring requirements.

The owner or operator of a Class VI well must prepare, maintain, and comply with a testing and monitoring plan to verify that the geologic sequestration project is operating as permitted and is not endangering USDWs. The requirement to maintain and implement an approved plan is directly enforceable regardless of whether the requirement is a condition of the permit. The testing and monitoring plan must be submitted with the permit application, for Director approval, and must include a description of how the owner or operator will meet the requirements of this section, including accessing sites for all necessary monitoring and testing during the life of the project. Testing and monitoring associated with geologic sequestration projects must, at a minimum, include:

(a) Analysis of the carbon dioxide stream with sufficient frequency to yield data representative of its chemical and physical characteristics;

(b) Installation and use, except during well workovers as defined in § 146.88(d), of continuous recording devices to monitor injection pressure, rate, and volume; the pressure on the annulus between the tubing and the long string casing; and the annulus fluid volume added;

(c) Corrosion monitoring of the well materials for loss of mass, thickness, cracking, pitting, and other signs of corrosion, which must be performed on a quarterly basis to ensure that the well components meet the minimum standards for material strength and performance set forth in § 146.86(b), by:

(1) Analyzing coupons of the well construction materials placed in contact with the carbon dioxide stream; or

(2) Routing the carbon dioxide stream through a loop constructed with the material used in the well and inspecting the materials in the loop; or

(3) Using an alternative method approved by the Director;

(d) Periodic monitoring of the ground water quality and geochemical changes above the confining zone(s) that may be a result of carbon dioxide movement through the confining zone(s) or additional identified zones including:

(1) The location and number of monitoring wells based on specific information about the geologic sequestration project, including injection rate and volume, geology, the presence of artificial penetrations, and other factors; and

(2) The monitoring frequency and spatial distribution of monitoring wells based on baseline geochemical data that has been collected under § 146.82(a)(6) and on any modeling results in the area of review evaluation required by § 146.84(c).

(e) A demonstration of external mechanical integrity pursuant to § 146.89(c) at least once per year until the injection well is plugged; and, if required by the Director, a casing inspection log pursuant to requirements at § 146.89(d) at a frequency established in the testing and monitoring plan;

(f) A pressure fall-off test at least once every five years unless more frequent testing is required by the Director based on site-specific information;

(g) Testing and monitoring to track the extent of the carbon dioxide plume and the presence or absence of elevated pressure (e.g., the pressure front) by using:

(1) Direct methods in the injection zone(s); and,

(2) Indirect methods (e.g., seismic, electrical, gravity, or electromagnetic surveys and/or down-hole carbon dioxide detection tools), unless the Director determines, based on site-specific geology, that such methods are not appropriate;

(h) The Director may require surface air monitoring and/or soil gas monitoring to detect movement of carbon dioxide that could endanger a USDW.

(1) Design of Class VI surface air and/or soil gas monitoring must be based on potential risks to USDWs within the area of review;

(2) The monitoring frequency and spatial distribution of surface air monitoring and/or soil gas monitoring must be decided using baseline data, and the monitoring plan must describe how the proposed monitoring will yield useful information on the area of review delineation and/or compliance with standards under § 144.12 of this chapter;

(3) If an owner or operator demonstrates that monitoring employed under §§ 98.440 to 98.449 of this chapter (Clean Air Act, 42 U.S.C. 7401 *et seq.*) accomplishes the goals of paragraphs (h)(1) and (2) of this section, and meets the requirements pursuant to § 146.91(c)(5), a Director that requires surface air/soil gas monitoring must approve the use of monitoring employed under §§ 98.440 to 98.449 of this chapter. Compliance with §§ 98.440 to 98.449 of this chapter pursuant to this provision is considered a condition of the Class VI permit;

(i) Any additional monitoring, as required by the Director, necessary to support, upgrade, and improve computational modeling of the area of review evaluation required under § 146.84(c) and to determine compliance with standards under § 144.12 of this chapter;

(j) The owner or operator shall periodically review the testing and monitoring plan to incorporate monitoring data collected under this subpart, operational data collected under § 146.88, and the most recent area of review reevaluation performed under § 146.84(e). In no case shall the owner or operator review the testing and monitoring plan less often than once every five years. Based on this review, the owner or operator shall submit an amended testing and monitoring plan or demonstrate to the Director that no amendment to the testing and monitoring plan is needed. Any amendments to the testing and monitoring plan must be approved by the Director, must be incorporated into the permit, and are subject to the permit modification requirements at § 144.39 or § 144.41 of this chapter, as appropriate. Amended plans or demonstrations shall be submitted to the Director as follows:

(1) Within one year of an area of review reevaluation;

(2) Following any significant changes to the facility, such as addition of monitoring wells or newly permitted injection wells within the area of review, on a schedule determined by the Director; or

(3) When required by the Director.

(k) A quality assurance and surveillance plan for all testing and monitoring requirements.

§ 146.91 Reporting requirements.

The owner or operator must, at a minimum, provide, as specified in paragraph (e) of this section, the following reports to the Director, for each permitted Class VI well:

(a) Semi-annual reports containing:

(1) Any changes to the physical, chemical, and other relevant characteristics of the carbon dioxide stream from the proposed operating data;

(2) Monthly average, maximum, and minimum values for injection pressure, flow rate and volume, and annular pressure;

(3) A description of any event that exceeds operating parameters for annulus pressure or injection pressure specified in the permit;

(4) A description of any event which triggers a shut-off device required pursuant to § 146.88(e) and the response taken;

(5) The monthly volume and/or mass of the carbon dioxide stream injected over the reporting period and the volume injected cumulatively over the life of the project;

(6) Monthly annulus fluid volume added; and

(7) The results of monitoring prescribed under § 146.90.

(b) Report, within 30 days, the results of:

(1) Periodic tests of mechanical integrity;

(2) Any well workover; and,

(3) Any other test of the injection well conducted by the permittee if required by the Director.

(c) Report, within 24 hours:

(1) Any evidence that the injected carbon dioxide stream or associated pressure front may cause an endangerment to a USDW;

(2) Any noncompliance with a permit condition, or malfunction of the injection system, which may cause fluid migration into or between USDWs;

(3) Any triggering of a shut-off system (*i.e.*, down-hole or at the surface);

(4) Any failure to maintain mechanical integrity; or.

(5) Pursuant to compliance with the requirement at §146.90(h) for surface air/soil gas monitoring or other monitoring technologies, if required by the Director, any release of carbon dioxide to the atmosphere or biosphere.

(d) Owners or operators must notify the Director in writing 30 days in advance of:

(1) Any planned well workover;

(2) Any planned stimulation activities, other than stimulation for formation testing conducted under §146.82; and

(3) Any other planned test of the injection well conducted by the permittee.

(e) Regardless of whether a State has primary enforcement responsibility, owners or operators must submit all required reports, submittals, and notifications under subpart H of this part to EPA in an electronic format approved by EPA.

(f) Records shall be retained by the owner or operator as follows:

(1) All data collected under §146.82 for Class VI permit applications shall be retained throughout the life of the geologic sequestration project and for 10 years following site closure.

(2) Data on the nature and composition of all injected fluids collected pursuant to §146.90(a) shall be retained until 10 years after site closure. The Director may require the owner or operator to deliver the records to the Director at the conclusion of the retention period.

(3) Monitoring data collected pursuant to §146.90(b) through (i) shall be retained for 10 years after it is collected.

(4) Well plugging reports, post-injection site care data, including, if appropriate, data and information used to develop the demonstration of the alternative post-injection site care timeframe, and the site closure report collected pursuant to requirements at §§146.93(f) and (h) shall be retained for 10 years following site closure.

(5) The Director has authority to require the owner or operator to retain any records required in this subpart for longer than 10 years after site closure.

§146.92 Injection well plugging.

(a) Prior to the well plugging, the owner or operator must flush each Class VI injection well with a buffer fluid, determine bottomhole reservoir pressure, and perform a final external mechanical integrity test.

(b) *Well plugging plan*. The owner or operator of a Class VI well must prepare, maintain, and comply with a plan that is acceptable to the Director. The requirement to maintain and implement an approved plan is directly enforceable regardless of whether the requirement is a condition of the permit. The well plugging plan must be submitted as part of the permit application and must include the following information:

(1) Appropriate tests or measures for determining bottomhole reservoir pressure;

(2) Appropriate testing methods to ensure external mechanical integrity as specified in §146.89;

(3) The type and number of plugs to be used;

(4) The placement of each plug, including the elevation of the top and bottom of each plug;

(5) The type, grade, and quantity of material to be used in plugging. The material must be compatible with the carbon dioxide stream; and

(6) The method of placement of the plugs.

(c) *Notice of intent to plug*. The owner or operator must notify the Director in writing pursuant to §146.91(e), at least 60 days before plugging of a well. At this time, if any changes have been made to the original well plugging

plan, the owner or operator must also provide the revised well plugging plan. The Director may allow for a shorter notice period. Any amendments to the injection well plugging plan must be approved by the Director, must be incorporated into the permit, and are subject to the permit modification requirements at §144.39 or §144.41 of this chapter, as appropriate.

(d) *Plugging report.* Within 60 days after plugging, the owner or operator must submit, pursuant to §146.91(e), a plugging report to the Director. The report must be certified as accurate by the owner or operator and by the person who performed the plugging operation (if other than the owner or operator.) The owner or operator shall retain the well plugging report for 10 years following site closure.

§ 146.93 Post-injection site care and site closure.

(a) The owner or operator of a Class VI well must prepare, maintain, and comply with a plan for post-injection site care and site closure that meets the requirements of paragraph (a)(2) of this section and is acceptable to the Director. The requirement to maintain and implement an approved plan is directly enforceable regardless of whether the requirement is a condition of the permit.

(1) The owner or operator must submit the post-injection site care and site closure plan as a part of the permit application to be approved by the Director.

(2) The post-injection site care and site closure plan must include the following information:

(i) The pressure differential between pre-injection and predicted post-injection pressures in the injection zone(s);

(ii) The predicted position of the carbon dioxide plume and associated pressure front at site closure as demonstrated in the area of review evaluation required under §146.84(c)(1);

(iii) A description of post-injection monitoring location, methods, and proposed frequency;

(iv) A proposed schedule for submitting post-injection site care monitoring results to the Director pursuant to §146.91(e); and,

(v) The duration of the post-injection site care timeframe and, if approved by the Director, the demonstration of the alternative post-injection site care timeframe that ensures non-endangerment of USDWs.

(3) Upon cessation of injection, owners or operators of Class VI wells must either submit an amended post-injection site care and site closure plan or demonstrate to the Director through monitoring data and modeling results that no amendment to the plan is needed. Any amendments to the post-injection site care and site closure plan must be approved by the Director, be incorporated into the permit, and are subject to the permit modification requirements at §144.39 or §144.41 of this chapter, as appropriate.

(4) At any time during the life of the geologic sequestration project, the owner or operator may modify and resubmit the post-injection site care and site closure plan for the Director's approval within 30 days of such change.

(b) The owner or operator shall monitor the site following the cessation of injection to show the position of the carbon dioxide plume and pressure front and demonstrate that USDWs are not being endangered.

(1) Following the cessation of injection, the owner or operator shall continue to conduct monitoring as specified in the Director-approved post-injection site care and site closure plan for at least 50 years or for the duration of the alternative timeframe approved by the Director pursuant to requirements in paragraph (c) of this section, unless he/she makes a demonstration under (b)(2) of this section. The monitoring must continue until the geologic sequestration project no longer poses an endangerment to USDWs and the demonstration under (b)(2) of this section is submitted and approved by the Director.

(2) If the owner or operator can demonstrate to the satisfaction of the Director before 50 years or prior to the end of the approved alternative timeframe based on monitoring and other site-specific data, that the geologic sequestration project no longer poses an endangerment to USDWs, the Director may approve an amendment to the post-injection site care and site closure

plan to reduce the frequency of monitoring or may authorize site closure before the end of the 50-year period or prior to the end of the approved alternative timeframe, where he or she has substantial evidence that the geologic sequestration project no longer poses a risk of endangerment to USDWs.

(3) Prior to authorization for site closure, the owner or operator must submit to the Director for review and approval a demonstration, based on monitoring and other site-specific data, that no additional monitoring is needed to ensure that the geologic sequestration project does not pose an endangerment to USDWs.

(4) If the demonstration in paragraph (b)(3) of this section cannot be made (*i.e.*, additional monitoring is needed to ensure that the geologic sequestration project does not pose an endangerment to USDWs) at the end of the 50-year period or at the end of the approved alternative timeframe, or if the Director does not approve the demonstration, the owner or operator must submit to the Director a plan to continue post-injection site care until a demonstration can be made and approved by the Director.

(c) *Demonstration of alternative post-injection site care timeframe.* At the Director's discretion, the Director may approve, in consultation with EPA, an alternative post-injection site care timeframe other than the 50 year default, if an owner or operator can demonstrate during the permitting process that an alternative post-injection site care timeframe is appropriate and ensures non-endangerment of USDWs. The demonstration must be based on significant, site-specific data and information including all data and information collected pursuant to §§146.82 and 146.83, and must contain substantial evidence that the geologic sequestration project will no longer pose a risk of endangerment to USDWs at the end of the alternative post-injection site care timeframe.

(1) A demonstration of an alternative post-injection site care timeframe must include consideration and documentation of:

(i) The results of computational modeling performed pursuant to delineation of the area of review under §146.84;

(ii) The predicted timeframe for pressure decline within the injection zone, and any other zones, such that formation fluids may not be forced into any USDWs; and/or the timeframe for pressure decline to pre-injection pressures;

(iii) The predicted rate of carbon dioxide plume migration within the injection zone, and the predicted timeframe for the cessation of migration;

(iv) A description of the site-specific processes that will result in carbon dioxide trapping including immobilization by capillary trapping, dissolution, and mineralization at the site;

(v) The predicted rate of carbon dioxide trapping in the immobile capillary phase, dissolved phase, and/or mineral phase;

(vi) The results of laboratory analyses, research studies, and/or field or site-specific studies to verify the information required in paragraphs (iv) and (v) of this section;

(vii) A characterization of the confining zone(s) including a demonstration that it is free of transmissive faults, fractures, and micro-fractures and of appropriate thickness, permeability, and integrity to impede fluid (e.g., carbon dioxide, formation fluids) movement;

(viii) The presence of potential conduits for fluid movement including planned injection wells and project monitoring wells associated with the proposed geologic sequestration project or any other projects in proximity to the predicted/modeled, final extent of the carbon dioxide plume and area of elevated pressure;

(ix) A description of the well construction and an assessment of the quality of plugs of all abandoned wells within the area of review;

(x) The distance between the injection zone and the nearest USDWs above and/or below the injection zone; and

(xi) Any additional site-specific factors required by the Director.

(2) Information submitted to support the demonstration in paragraph (c)(1) of this section must meet the following criteria:

(i) All analyses and tests performed to support the demonstration must be accurate, reproducible, and performed in accordance with the established quality assurance standards;

(ii) Estimation techniques must be appropriate and EPA-certified test protocols must be used where available;

(iii) Predictive models must be appropriate and tailored to the site conditions, composition of the carbon dioxide stream and injection and site conditions over the life of the geologic sequestration project;

(iv) Predictive models must be calibrated using existing information (e.g., at Class I, Class II, or Class V experimental technology well sites) where sufficient data are available;

(v) Reasonably conservative values and modeling assumptions must be used and disclosed to the Director whenever values are estimated on the basis of known, historical information instead of site-specific measurements;

(vi) An analysis must be performed to identify and assess aspects of the alternative post-injection site care timeframe demonstration that contribute significantly to uncertainty. The owner or operator must conduct sensitivity analyses to determine the effect that significant uncertainty may contribute to the modeling demonstration.

(vii) An approved quality assurance and quality control plan must address all aspects of the demonstration; and,

(viii) Any additional criteria required by the Director.

(d) *Notice of intent for site closure.* The owner or operator must notify the Director in writing at least 120 days before site closure. At this time, if any changes have been made to the original post-injection site care and site closure plan, the owner or operator must also provide the revised plan. The Director may allow for a shorter notice period.

(e) After the Director has authorized site closure, the owner or operator must plug all monitoring wells in a manner which will not allow movement of injection or formation fluids that endangers a USDW.

(f) The owner or operator must submit a site closure report to the Director within 90 days of site closure, which must thereafter be retained at a location designated by the Director for 10 years. The report must include:

(1) Documentation of appropriate injection and monitoring well plugging as specified in § 146.92 and paragraph (e) of this section. The owner or operator must provide a copy of a survey plat which has been submitted to the local zoning authority designated by the Director. The plat must indicate the location of the injection well relative to permanently surveyed benchmarks. The owner or operator must also submit a copy of the plat to the Regional Administrator of the appropriate EPA Regional Office;

(2) Documentation of appropriate notification and information to such State, local and Tribal authorities that have authority over drilling activities to enable such State, local, and Tribal authorities to impose appropriate conditions on subsequent drilling activities that may penetrate the injection and confining zone(s); and

(3) Records reflecting the nature, composition, and volume of the carbon dioxide stream.

(g) Each owner or operator of a Class VI injection well must record a notation on the deed to the facility property or any other document that is normally examined during title search that will in perpetuity provide any potential purchaser of the property the following information:

(1) The fact that land has been used to sequester carbon dioxide;

(2) The name of the State agency, local authority, and/or Tribe with which the survey plat was filed, as well as the address of the Environmental Protection Agency Regional Office to which it was submitted; and

(3) The volume of fluid injected, the injection zone or zones into which it was injected, and the period over which injection occurred.

(h) The owner or operator must retain for 10 years following site closure, records collected during the post-injection site care period. The owner or operator must deliver the records to the Director at the conclusion of the retention period, and the records must thereafter be retained at a location designated by the Director for that purpose.

§ 146.94 Emergency and remedial response.

(a) As part of the permit application, the owner or operator must provide the

Director with an emergency and remedial response plan that describes actions the owner or operator must take to address movement of the injection or formation fluids that may cause an endangerment to a USDW during construction, operation, and post-injection site care periods. The requirement to maintain and implement an approved plan is directly enforceable regardless of whether the requirement is a condition of the permit.

(b) If the owner or operator obtains evidence that the injected carbon dioxide stream and associated pressure front may cause an endangerment to a USDW, the owner or operator must:

(1) Immediately cease injection;

(2) Take all steps reasonably necessary to identify and characterize any release;

(3) Notify the Director within 24 hours; and

(4) Implement the emergency and remedial response plan approved by the Director.

(c) The Director may allow the operator to resume injection prior to remediation if the owner or operator demonstrates that the injection operation will not endanger USDWs.

(d) The owner or operator shall periodically review the emergency and remedial response plan developed under paragraph (a) of this section. In no case shall the owner or operator review the emergency and remedial response plan less often than once every five years. Based on this review, the owner or operator shall submit an amended emergency and remedial response plan or demonstrate to the Director that no amendment to the emergency and remedial response plan is needed. Any amendments to the emergency and remedial response plan must be approved by the Director, must be incorporated into the permit, and are subject to the permit modification requirements at §144.39 or §144.41 of this chapter, as appropriate. Amended plans or demonstrations shall be submitted to the Director as follows:

(1) Within one year of an area of review reevaluation;

(2) Following any significant changes to the facility, such as addition of injection or monitoring wells, on a schedule determined by the Director; or

(3) When required by the Director.

§146.95 Class VI injection depth waiver requirements.

This section sets forth information which an owner or operator seeking a waiver of the Class VI injection depth requirements must submit to the Director; information the Director must consider in consultation with all affected Public Water System Supervision Directors; the procedure for Director—Regional Administrator communication and waiver issuance; and the additional requirements that apply to owners or operators of Class VI wells granted a waiver of the injection depth requirements.

(a) In seeking a waiver of the requirement to inject below the lowermost USDW, the owner or operator must submit a supplemental report concurrent with permit application. The supplemental report must include the following,

(1) A demonstration that the injection zone(s) is/are laterally continuous, is not a USDW, and is not hydraulically connected to USDWs; does not outcrop; has adequate injectivity, volume, and sufficient porosity to safely contain the injected carbon dioxide and formation fluids; and has appropriate geochemistry.

(2) A demonstration that the injection zone(s) is/are bounded by laterally continuous, impermeable confining units above and below the injection zone(s) adequate to prevent fluid movement and pressure buildup outside of the injection zone(s); and that the confining unit(s) is/are free of transmissive faults and fractures. The report shall further characterize the regional fracture properties and contain a demonstration that such fractures will not interfere with injection, serve as conduits, or endanger USDWs.

(3) A demonstration, using computational modeling, that USDWs above and below the injection zone will not be endangered as a result of fluid movement. This modeling should be conducted in conjunction with the area of review determination, as described in §146.84, and is subject to requirements, as described in §146.84(c), and periodic reevaluation, as described in §146.84(e).

(4) A demonstration that well design and construction, in conjunction with the waiver, will ensure isolation of the injectate in lieu of requirements at 146.86(a)(1) and will meet well construction requirements in paragraph (f) of this section.

(5) A description of how the monitoring and testing and any additional plans will be tailored to the geologic sequestration project to ensure protection of USDWs above and below the injection zone(s), if a waiver is granted.

(6) Information on the location of all the public water supplies affected, reasonably likely to be affected, or served by USDWs in the area of review.

(7) Any other information requested by the Director to inform the Regional Administrator's decision to issue a waiver.

(b) To inform the Regional Administrator's decision on whether to grant a waiver of the injection depth requirements at §§144.6 of this chapter, 146.5(f), and 146.86(a)(1), the Director must submit, to the Regional Administrator, documentation of the following:

(1) An evaluation of the following information as it relates to siting, construction, and operation of a geologic sequestration project with a waiver:

(i) The integrity of the upper and lower confining units;

(ii) The suitability of the injection zone(s) (e.g., lateral continuity; lack of transmissive faults and fractures; knowledge of current or planned artificial penetrations into the injection zone(s) or formations below the injection zone);

(iii) The potential capacity of the geologic formation(s) to sequester carbon dioxide, accounting for the availability of alternative injection sites;

(iv) All other site characterization data, the proposed emergency and remedial response plan, and a demonstration of financial responsibility;

(v) Community needs, demands, and supply from drinking water resources;

(vi) Planned needs, potential and/or future use of USDWs and non-USDWs in the area;

(vii) Planned or permitted water, hydrocarbon, or mineral resource exploitation potential of the proposed injection formation(s) and other formations both above and below the injection zone to determine if there are any plans to drill through the formation to access resources in or beneath the proposed injection zone(s)/formation(s);

(viii) The proposed plan for securing alternative resources or treating USDW formation waters in the event of contamination related to the Class VI injection activity; and,

(ix) Any other applicable considerations or information requested by the Director.

(2) Consultation with the Public Water System Supervision Directors of all States and Tribes having jurisdiction over lands within the area of review of a well for which a waiver is sought.

(3) Any written waiver-related information submitted by the Public Water System Supervision Director(s) to the (UIC) Director.

(c) Pursuant to requirements at §124.10 of this chapter and concurrent with the Class VI permit application notice process, the Director shall give public notice that a waiver application has been submitted. The notice shall clearly state:

(1) The depth of the proposed injection zone(s);

(2) The location of the injection well(s);

(3) The name and depth of all USDWs within the area of review;

(4) A map of the area of review;

(5) The names of any public water supplies affected, reasonably likely to be affected, or served by USDWs in the area of review; and,

(6) The results of UIC-Public Water System Supervision consultation required under paragraph (b)(2) of this section.

(d) Following public notice, the Director shall provide all information received through the waiver application process to the Regional Administrator. Based on the information provided, the Regional Administrator shall provide written concurrence or non-concurrence regarding waiver issuance.

(1) If the Regional Administrator determines that additional information is required to support a decision, the Director shall provide the information. At his or her discretion, the Regional Administrator may require that public

notice of the new information be initiated.

(2) In no case shall a Director of a State-approved program issue a waiver without receipt of written concurrence from the Regional Administrator.

(e) If a waiver is issued, within 30 days of waiver issuance, EPA shall post the following information on the Office of Water's Web site:

(1) The depth of the proposed injection zone(s);

(2) The location of the injection well(s);

(3) The name and depth of all USDWs within the area of review;

(4) A map of the area of review;

(5) The names of any public water supplies affected, reasonably likely to be affected, or served by USDWs in the area of review; and

(6) The date of waiver issuance.

(f) Upon receipt of a waiver of the requirement to inject below the lowermost USDW for geologic sequestration, the owner or operator of the Class VI well must comply with:

(1) All requirements at §§146.84, 146.85, 146.87, 146.88, 146.89, 146.91, 146.92, and 146.94;

(2) All requirements at §146.86 with the following modified requirements:

(i) The owner or operator must ensure that Class VI wells with a waiver are constructed and completed to prevent movement of fluids into any unauthorized zones including USDWs, in lieu of requirements at §146.86(a)(1).

(ii) The casing and cementing program must be designed to prevent the movement of fluids into any unauthorized zones including USDWs in lieu of requirements at §146.86(b)(1).

(iii) The surface casing must extend through the base of the nearest USDW directly above the injection zone and be cemented to the surface; or, at the Director's discretion, another formation above the injection zone and below the nearest USDW above the injection zone.

(3) All requirements at §146.90 with the following modified requirements:

(i) The owner or operator shall monitor the groundwater quality, geochemical changes, and pressure in the first USDWs immediately above and below the injection zone(s); and in any other formations at the discretion of the Director.

(ii) Testing and monitoring to track the extent of the carbon dioxide plume and the presence or absence of elevated pressure (e.g., the pressure front) by using direct methods to monitor for pressure changes in the injection zone(s); and, indirect methods (e.g., seismic, electrical, gravity, or electromagnetic surveys and/or down-hole carbon dioxide detection tools), unless the Director determines, based on site-specific geology, that such methods are not appropriate.

(4) All requirements at §146.93 with the following, modified post-injection site care monitoring requirements:

(i) The owner or operator shall monitor the groundwater quality, geochemical changes and pressure in the first USDWs immediately above and below the injection zone; and in any other formations at the discretion of the Director.

(ii) Testing and monitoring to track the extent of the carbon dioxide plume and the presence or absence of elevated pressure (e.g., the pressure front) by using direct methods in the injection zone(s); and indirect methods (e.g., seismic, electrical, gravity, or electromagnetic surveys and/or down-hole carbon dioxide detection tools), unless the Director determines based on site-specific geology, that such methods are not appropriate;

(5) Any additional requirements requested by the Director designed to ensure protection of USDWs above and below the injection zone(s).

PART 147—STATE, TRIBAL, AND EPA-ADMINISTERED UNDERGROUND INJECTION CONTROL PROGRAMS

Subpart A—General Provisions

Sec.
147.1 Purpose and scope.
147.2 Severability of provisions.

Subpart B—Alabama

147.50 State-administered program—Class II wells.
147.51 State-administered program—Class I, III, IV, and V wells.
147.52 State-administered program—Hydraulic Fracturing of Coal Beds.

147.60 EPA-administered program—Indian lands.

Subpart C—Alaska

147.100 State-administered program—Class II wells.
147.101 EPA-administered program.
147.102 Aquifer exemptions.
147.103 Existing Class I, II (except enhanced recovery and hydrocarbon storage) and III wells authorized by rule.
147.104 Existing Class II enhanced recovery and hydrocarbon storage wells authorized by rule.

Subpart D—Arizona

147.150 State-administered program. [Reserved]
147.151 EPA-administered program.
147.152 Aquifer exemptions. [Reserved]

Subpart E—Arkansas

147.200 State-administered program—Class I, III, IV, and V wells.
147.201 State-administered program—Class II wells. [Reserved]
147.205 EPA-administered program—Indian lands.

Subpart F—California

147.250 State-administered program—Class II wells.
147.251 EPA-administered program—Class I, III, IV, and V wells and Indian lands.
147.252 Aquifer exemptions. [Reserved]
147.253 Existing Class I, II (except enhanced recovery and hydrocarbon storage) and III wells authorized by rule.

Subpart G—Colorado

147.300 State-administered program—Class II wells.
147.301 EPA-administered program—Class I, III, IV, V wells and Indian lands.
147.302 Aquifer exemptions.
147.303 Existing Class I, II (except enhanced recovery and hydrocarbon storage) and III wells authorized by rule.
147.304 Existing Class II enhanced recovery and hydrocarbon storage wells authorized by rule.
147.305 Requirements for all wells.

Subpart H—Connecticut

147.350 State-administered program.
147.351–147.352 [Reserved]
147.353 EPA-administered program—Indian lands.
147.354–147.359 [Reserved]

Subpart I—Delaware

147.400 State-administered program.
147.401–147.402 [Reserved]
147.403 EPA-administered program—Indian lands.
147.404–147.449 [Reserved]

Subpart J—District of Columbia

147.450 State-administered program. [Reserved]
147.451 EPA-administered program.
147.452 Aquifer exemptions. [Reserved]

Subpart K—Florida

147.500 State-administered program—Class I, III, IV, and V wells.
147.501 EPA-administered program—Class II wells and Indian lands.
147.502 Aquifer exemptions. [Reserved]
147.503 Existing Class II (except enhanced recovery and hydrocarbon storage) wells authorized by rule.
147.504 Existing Class II enhanced recovery and hydrocarbon storage wells authorized by rule.

Subpart L—Georgia

147.550 State-administered program.
147.551–147.552 [Reserved]
147.553 EPA-administered program—Indian lands.
147.554–147.559 [Reserved]

Subpart M—Hawaii

147.600 State-administered program. [Reserved]
147.601 EPA-administered program.

Subpart N—Idaho

147.650 State-administered program—Class I, III, IV, and V wells.
147.651 EPA-administered program—Class II wells and all wells on Indian lands.
147.652 Aquifer exemptions. [Reserved]

Subpart O—Illinois

147.700 State-administered program—Class I, III, IV, and V wells.
147.701 State-administered program—Class II wells.
147.703 EPA-administered program—Indian lands.

Subpart P—Indiana

147.750 State-administered program—Class II wells.
147.751 EPA-administered program.
147.752 Aquifer exemptions. [Reserved]
147.753 Existing Class I and III wells authorized by rule.

Subpart Q—Iowa

147.800 State-administered program. [Reserved]
147.801 EPA-administered program.
147.802 Aquifer exemptions. [Reserved]

Subpart R—Kansas

147.850 State-administered program—Class I, III, IV and V wells.
147.851 State-administered program—Class II wells.
147.852–147.859 [Reserved]
147.860 EPA-administered program—Indian lands.

Subpart S—Kentucky

147.900 State-administered program—Class II wells.
147.901 EPA-administered program—Class I, III, IV, V, and VI wells and Indian lands.EPA-administered program.
147.902 Aquifer exemptions.
147.903 Existing Class I and III wells authorized by rule.
147.904 [Reserved]
147.905 Requirements for all wells—area of review.

Subpart T—Louisiana

147.950 State-administered program.
147.951 EPA-administered program—Indian lands.

Subpart U—Maine

147.1000 State-administered program.
147.1001 EPA-administered program—Indian lands.

Subpart V—Maryland

147.1050 State-administered program—Class I, II, III, IV, and V wells.
147.1051–147.1052 [Reserved]
147.1053 EPA-administered program—Indian lands.
147.1054–147.1099 [Reserved]

Subpart W—Massachusetts

147.1100 State-administered program.
147.1101 EPA-administered program—Indian lands.

Subpart X—Michigan

147.1150 State-administered program. [Reserved]
147.1151 EPA-administered program.
147.1152 Aquifer exemptions. [Reserved]
147.1153 Existing Class I, II (except enhanced recovery and hydrocarbon storage) and III wells authorized by rule.
147.1154 Existing Class II enhanced recovery and hydrocarbon storage wells authorized by rule.
147.1155 Requirements for all wells.

Subpart Y—Minnesota

147.1200 State-administered program. [Reserved]
147.1201 EPA-administered program.
147.1202 Aquifer exemptions. [Reserved]
147.1210 Requirements for Indian lands.

Subpart Z—Mississippi

147.1250 State-administered program—Class I, III, IV, and V wells.
147.1251 State-administered program—Class II wells.
147.1252 EPA-administered program—Indian lands.

Subpart AA—Missouri

147.1300 State-administered program.
147.1301 State-administered program—Class I, III, IV, and V wells.
147.1302 Aquifer exemptions. [Reserved]
147.1303 EPA-administered program—Indian lands.

Subpart BB—Montana

147.1350 State-administered programs—Class II wells.
147.1351 EPA-administered program.
147.1352 Aquifer exemptions.
147.1353 Existing Class I, II (except enhanced recovery and hydrocarbon storage) and III wells authorized by rule.
147.1354 Existing Class II enhanced recovery and hydrocarbon storage wells authorized by rule.
147.1355 Requirements for all wells.
APPENDIX A TO SUBPART BB OF PART 147—STATE REQUIREMENTS INCORPORATED BY REFERENCE IN SUBPART BB OF PART 147 OF THE CODE OF FEDERAL REGULATIONS.

Subpart CC—Nebraska

147.1400 State-administered program—Class II wells.
147.1401 State-administered program—Class I, III, IV, and V wells.
147.1402 Aquifer exemptions. [Reserved]
147.1403 EPA-administered program—Indian lands.

Subpart DD—Nevada

147.1450 State-administered program.
147.1451 EPA-administered program—Indian lands.
147.1452 Aquifer exemptions. [Reserved]
147.1453 Existing Class I, II (except enhanced recovery and hydrocarbon storage) and III wells authorized by rule.

147.1454 Existing Class II enhanced recovery and hydrocarbon storage wells authorized by rule.

Subpart EE—New Hampshire

147.1500 State-administered program.
147.1501 EPA-administered program—Indian lands.

Subpart FF—New Jersey

147.1550 State-administered program.
147.1551 EPA-administered program—Indian lands.

Subpart GG—New Mexico

147.1600 State-administered program—Class II wells.
147.1601 State-administered program—Class I, III, IV and V wells.
147.1603 EPA-administered program—Indian lands.

Subpart HH—New York

147.1650 State-administered program. [Reserved]
147.1651 EPA-administered program.
147.1652 Aquifer exemptions.
147.1653 Existing Class I, II (except enhanced recovery and hydrocarbon storage) and III wells authorized by rule.
147.1654 Existing Class II enhanced recovery and hydrocarbon storage wells authorized by rule.
147.1655 Requirements for wells authorized by permit.

Subpart II—North Carolina

147.1700 State-administered program.
147.1701–147.1702 [Reserved]
147.1703 EPA-administered program—Indian lands.
147.1704–147.1749 [Reserved]

Subpart JJ—North Dakota

147.1750 State-administered program—Class II wells.
147.1751 State-administered program—Class I, III, IV, V and VI wells.
147.1752 EPA-administered program—Indian lands.

Subpart KK—Ohio

147.1800 State-administered program—Class II wells.
147.1801 State-administered program—Class I, III, IV and V wells.
147.1802 Aquifer exemptions. [Reserved]
147.1803 Existing Class I and III wells authorized by rule—maximum injection pressure.
147.1805 EPA-administered program—Indian lands.

Subpart LL—Oklahoma

147.1850 State-administered program—Class I, III, IV and V wells.
147.1851 State-administered program—Class II wells.
147.1852 EPA-administered program—Indian lands.

Subpart MM—Oregon

147.1900 State-administered program.
147.1901 EPA-administered program—Indian lands.

Subpart NN—Pennsylvania

147.1950 State-administered program. [Reserved]
147.1951 EPA-administered program.
147.1952 Aquifer exemptions.
147.1953 Existing Class I, II (except enhanced recovery and hydrocarbon storage) and III wells authorized by rule.
147.1954 Existing Class II enhanced recovery and hydrocarbon storage wells authorized by rule.
147.1955 Requirements for wells authorized by permit.

Subpart OO—Rhode Island

147.2000 State-administered program—Class I, II, III, IV, and V wells.
147.2001 EPA-administered program—Indian lands.

Subpart PP—South Carolina

147.2050 State-administered program.
147.2051 EPA-administered program—Indian lands.

Subpart QQ—South Dakota

147.2100 State-administered program—Class II wells.
147.2101 EPA-administered program—Class I, III, IV and V wells and all wells on Indian lands.
147.2102 Aquifer exemptions.
147.2103 Existing Class II enhanced recovery and hydrocarbon storage wells authorized by rule.
147.2104 Requirements for all wells.

Subpart RR—Tennessee

147.2150 State-administered program. [Reserved]
147.2151 EPA-administered program Class VI and Indian lands.
147.2152 Aquifer exemptions. [Reserved]
147.2153 Existing Class I, II (except enhanced recovery and hydrocarbon storage) and III wells authorized by rule.

Subpart SS—Texas

147.2200 State-administered program—Class I, III, IV, and V wells.
147.2201 State-administered program—Class II wells.
147.2205 EPA-administered program—Indian lands.

Subpart TT—Utah

147.2250 State-administered program—Class I, III, IV, and V wells.
147.2251 State-administered program—Class II wells.
147.2253 EPA-administered program—Indian lands.

Subpart UU—Vermont

147.2300 State-administered program.
147.2301–147.2302 [Reserved]
147.2303 EPA-administered program—Indian lands.
147.2304–147.2349 [Reserved]

Subpart VV—Virginia

147.2350 State-administered program. [Reserved]
147.2351 EPA-administered program.
147.2352 Aquifer exemptions. [Reserved]

Subpart WW—Washington

147.2400 State-administered program—Class I, II, III, IV, and V wells.
147.2403 EPA-administered program—Indian lands.
147.2404 EPA-administered program—Colville Reservation.

Subpart XX—West Virginia

147.2450–147.2452 [Reserved]
147.2453 EPA-administered program—Indian lands.
147.2454–147.2499 [Reserved]

Subpart YY—Wisconsin

147.2500 State-administered program.
147.2510 EPA-administered program—Indian lands.

Subpart ZZ—Wyoming

147.2550 State-administered program—Class I, III, IV, and V wells.
147.2551 State-administered program—Class II wells.
147.2553 EPA-administered program—Indian lands.
147.2554 Aquifer exemptions.
147.2555 Aquifer exemptions since January 1, 1999.

Subpart AAA—Guam

147.2600 State-administered program.
147.2601 EPA-administered program—Indian lands.

Subpart BBB—Puerto Rico

147.2650 State-administered program—Class I, II, III, IV, and V wells.
147.2651 EPA-administered program—Indian lands.

Subpart CCC—Virgin Islands

147.2700 State-administered program. [Reserved]
147.2701 EPA-administered program.

Subpart DDD—American Samoa

147.2750 State administered program. [Reserved]
147.2751 EPA-administered program.
147.2752 Aquifer exemptions. [Reserved]

Subpart EEE—Commonwealth of the Northern Mariana Islands

147.2800 State-administered program—Class I, II, III, IV, and V wells.
147.2801 EPA-administered program.
147.2802 Aquifer exemptions. [Reserved]

Subpart FFF—Trust Territory of the Pacific Islands

147.2850 State-administered program. [Reserved]
147.2851 EPA-administered program.
147.2852 Aquifer exemptions. [Reserved]

Subpart GGG—Osage Mineral Reserve—Class II Wells

147.2901 Applicability and scope.
147.2902 Definitions.
147.2903 Prohibition of unauthorized injection.
147.2904 Area of review.
147.2905 Plugging and abandonment.
147.2906 Emergency permits.
147.2907 Confidentiality of information.
147.2908 Aquifer exemptions.
147.2909 Authorization of existing wells by rule.
147.2910 Duration of authorization by rule.
147.2911 Construction requirements for wells authorized by rule.
147.2912 Operating requirements for wells authorized by rule.
147.2913 Monitoring and reporting requirements for wells authorized by rule.
147.2914 Corrective action for wells authorized by rule.
147.2915 Requiring a permit for wells authorized by rule.

147.2916 Coverage of permitting requirements.
147.2917 Duration of permits.
147.2918 Permit application information.
147.2919 Construction requirements for wells authorized by permit.
147.2920 Operating requirements for wells authorized by permit.
147.2921 Schedule of compliance.
147.2922 Monitoring and reporting requirements for wells authorized by permit.
147.2923 Corrective action for wells authorized by permit.
147.2924 Area permits.
147.2925 Standard permit conditions.
147.2926 Permit transfers.
147.2927 Permit modification.
147.2928 Permit termination.
147.2929 Administrative permitting procedures.

Subpart HHH—Lands of the Navajo, Ute Mountain Ute, and All Other New Mexico Tribes

147.3000 EPA-administered program.
147.3001 Definition.
147.3002 Public notice of permit actions.
147.3003 Aquifer exemptions.
147.3004 Duration of rule authorization for existing Class I and III wells.
147.3005 Radioactive waste injection wells.
147.3006 Injection pressure for existing Class II wells authorized by rule.
147.3007 Application for a permit.
147.3008 Criteria for aquifer exemptions.
147.3009 Area of review.
147.3010 Mechanical integrity tests.
147.3011 Plugging and abandonment of Class III wells.
147.3012 Construction requirements for Class I wells.
147.3013 Information to be considered for Class I wells.
147.3014 Construction requirements for Class III wells.
147.3015 Information to be considered for Class III wells.
147.3016 Criteria and standards applicable to Class V wells.
APPENDIX A TO SUBPART HHH OF PART 147—EXEMPTED AQUIFERS IN NEW MEXICO.

Subpart III—Lands of Certain Oklahoma Indian Tribes

147.3100 EPA-administered program.
147.3101 Public notice of permit actions.
147.3102 Plugging and abandonment plans.
147.3103 Fluid seals.
147.3104 Notice of abandonment.
147.3105 Plugging and abandonment report.
147.3106 Area of review.
147.3107 Mechanical integrity.
147.3108 Plugging Class I, II, and III wells.
147.3109 Timing of mechanical integrity test.

Subpart JJJ—Assiniboine and Sioux Tribes

147.3200 Fort Peck Indian Reservation: Assiniboine & Sioux Tribes—Class II wells.

Subpart KKK [Reserved]

Subpart LLL—Navajo Indian Lands

147.3400 Navajo Indian lands—Class II wells.

AUTHORITY: 42 U.S.C. 300f *et seq.;* and 42 U.S.C. 6901 *et seq.*

SOURCE: 49 FR 20197, May 11, 1984, unless otherwise noted.

EDITORIAL NOTE: Nomenclature changes to part 147 appear at 69 FR 18803, Apr. 9, 2004.

Subpart A—General Provisions

§ 147.1 Purpose and scope.

(a) This part sets forth the applicable Underground Injection Control (UIC) programs for each of the States, territories, and possessions identified pursuant to the Safe Drinking Water Act (SDWA) as needing a UIC program, including any Indian country geographically located within those States, territories, and possessions.

(b) The applicable UIC programs set forth in this part may be State-administered programs approved by EPA, Tribally-administered programs approved by EPA, or Federally-administered programs promulgated by EPA. In some cases, the applicable UIC program for a particular area may consist of a State-administered or Tribally-administered program applicable to some classes of wells and a Federally-administered program applicable to other classes of wells. Approval of a State or Tribal program is based upon a determination by the Administrator that the program meets the requirements of section 1422 or section 1425 of the SDWA, any other applicable provisions of this subpart, and the applicable provisions of 40 CFR parts 124, 144, 145 and 146. A Federally-administered program is promulgated in those instances where the State or Tribe has not submitted any program for approval or where the submitted program does not meet the minimum Federal statutory and regulatory requirements.

(c) In the case of each State or Tribal program approved by EPA pursuant to section 1422 of the SDWA, the relevant subpart describes the major elements

of that program, including the relevant State or Tribal statutes and regulations, the Statement(s) of Legal Authority, the Memorandum of Agreement, and the Program Description. State or Tribal statutes and regulations that contain standards, requirements, and procedures applicable to owners or operators have been incorporated by reference pursuant to regulations of the Office of the Federal Register. Material incorporated by reference is available for inspection in the appropriate EPA Regional office, in EPA Headquarters, and at the National Archives and Records Administration (NARA). For information on the availability of this material at NARA, call (202) 741–6030, or go to: *http://www.archives.gov/federal_register/code_of_federal_regulations/ibr_locations.html*. Other State or Tribal statutes and regulations containing standards and procedures that constitute elements of a State or Tribal program but do not apply directly to owners or operators have been listed but have not been incorporated by reference.

(d) In the case of any program promulgated under section 1422 for a State or Tribe that is to be administered by EPA, the relevant State or Tribal subpart makes applicable the provisions of 40 CFR parts 124, 144, 146, and 148, and any other additional requirements pertinent to the specific State or Tribal program.

(e) Regulatory provisions incorporated by reference (in the case of approved State or Tribal programs) or promulgated by EPA (in the case of EPA-administered programs), and all permit conditions or permit denials issued pursuant to such regulations, are enforceable by the Administrator pursuant to section 1423 of the SDWA.

(f) Class VI well owners or operators must comply with § 146.91(e) notwithstanding any State program approvals.

[73 FR 63646, Oct. 27, 2008, as amended at 75 FR 77303, Dec. 10, 2010]

§ 147.2 Severability of provisions.

The provisions in this part and the various applications thereof are distinct and severable. If any provision of this part or the application thereof to any person or circumstances is held invalid, such invalidity shall not affect other provisions or application of such provision to other persons or circumstances which can be given effect without the invalid provision or application.

Subpart B—Alabama

§ 147.50 State-administered program—Class II wells.

The UIC program for Class II wells in the State of Alabama, except those on Indian lands, is the program administered by the State Oil and Gas Board of Alabama, approved by EPA pursuant to section 1425 of the SDWA. Notice of this approval was published in the FEDERAL REGISTER on August 2, 1982 (47 FR 33268); the effective date of this program is August 2, 1982. This program consists of the following elements, as submitted to EPA in the State's program application:

(a) *Incorporation by reference*. The requirements set forth in the State statutes and regulations cited in this paragraph are hereby incorporated by reference and made a part of the applicable UIC program under the SDWA for the State of Alabama. This incorporation by reference was approved by the Director of the Federal Register on June 25, 1984.

(1) Code of Alabama Sections 9–17–1 through 9–17–109 (Cumm. Supp. 1989);

(2) State Oil and Gas Board of Alabama Administrative Code, Oil and Gas Report 1 (supplemented through May 1989), Rules and Regulations Governing the Conservation of Oil and Gas in Alabama, and Oil and Gas Statutes of Alabama with Oil and Gas Board Forms, § 400–1–2 and § 400–1–5–.04.

(b) The Memorandum of Agreement between EPA Region IV and the Alabama Oil and Gas Board, signed by the EPA Regional Administrator on June 15, 1982.

(c) *Statement of legal authority*. ''State Oil and Gas Board has Authority to Carry Out Underground Injection Control Program Relating to Class II Wells as Described in Federal Safe Drinking Water Act—Opinion by Assistant Attorney General,'' May 28, 1982.

(d) The Program Description and any other materials submitted as part of

the application or as supplements thereto.

[49 FR 20197, May 11, 1984, as amended at 53 FR 43086, Oct. 25, 1988; 56 FR 9411, Mar. 6, 1991]

§ 147.51 State-administered program—Class I, III, IV, and V wells.

The UIC program for Class I, III, IV and V wells in the State of Alabama, except those on Indian lands, is the program administered by the Alabama Department of Environmental Management, approved by EPA pursuant to section 1422 of the SDWA. Notice of this approval was published in the FEDERAL REGISTER on August 25, 1983 (48 FR 38640); the effective date of this program is August 25, 1983. This program consists of the following elements, as submitted to EPA in the State's program application:

(a) *Incorporation by reference*. The requirements set forth in the State statutes and regulations cited in this paragraph are hereby incorporated by reference and made a part of the applicable UIC program under the SDWA for the State of Alabama. This incorporation by reference was approved by the Director of the Federal Register on June 25, 1984.

(1) Alabama Water Pollution Control Act, Code of Alabama 1975, sections 22–22–1 through 22–22–14 (1980 and Supp. 1983);

(2) Regulations, Policies and Procedures of the Alabama Water Improvement Commission, Title I (Regulations) (Rev. December 1980), as amended May 17, 1982, to add Chapter 9, Underground Injection Control Regulations (effective June 10, 1982), as amended April 6, 1983 (effective May 11, 1983).

(b) The Memorandum of Agreement between EPA Region IV and the Alabama Department of Environment Management, signed by the EPA Regional Administrator on May 24, 1983.

(c) *Statement of legal authority*. (1) ''Water Pollution—Public Health—State has Authority to Carry Out Underground Injection Control Program Described in Federal Safe Drinking Water Act—Opinion by Legal Counsel for the Water Improvement Commission,'' June 25, 1982;

(2) Letter from Attorney, Alabama Water Improvement Commission, to Regional Administrator, EPA Region IV, ''Re: AWIC Response to Phillip Tate's (U.S. EPA, Washington) Comments on AWIC's Final Application for Class I, III, IV, and V UIC Program,'' September 21, 1982;

(3) Letter from Alabama Chief Assistant Attorney General to Regional Counsel, EPA Region IV, ''Re: Status of Independent Legal Counsel in Alabama Water Improvement Commission's Underground Injection Control Program,'' September 14, 1982.

(d) The Program Description and any other materials submitted as part of the application or as supplements thereto.

[49 FR 20197, May 11, 1984, as amended at 53 FR 43086, Oct. 25, 1988]

§ 147.52 State-administered program—Hydraulic Fracturing of Coal Beds.

The UIC program for hydraulic fracturing of coal beds in the State of Alabama, except those on Indian lands, is the program administered by the State Oil and Gas Board of Alabama, approved by EPA pursuant to Section 1425 of the SDWA on December 22, 1999 and effective on January 19, 2000. The Alabama program consists of the following elements, as submitted to EPA in the State's program application:

(a) *Incorporation by reference*. The requirements set forth in State Oil and Gas Board of Alabama Rule 400–4–1–.02, Definitions, and Rule 400–4–5–.04, Protection of Underground Sources of Drinking Water during the Hydraulic Fracturing of Coal Beds, are hereby incorporated by reference and made a part of the applicable UIC program under the SDWA for the State of Alabama. This incorporation by reference was approved by the Director of the Federal Register on January 19, 2000 in accordance with 5 U.S.C. 552(a) and 1 CFR part 51. Copies may be obtained at the State Oil and Gas Board of Alabama, 420 Hackberry Lane, Tuscaloosa, AL 35489–9780. Copies may be inspected at the Environmental Protection Agency, Region 4, Water Management Division, Ground Water/Drinking Water Branch, Ground Water & UIC Section, Sam Nunn Atlanta Federal Center, 61

Forsyth Street, S.W., Room15–T53, Atlanta, GA 30303-8960, or at the National Archives and Records Administration (NARA). For information on the availability of this material at NARA, call 202–741–6030, or go to: *http://www.archives.gov/federal_register/code_of_federal_regulations/ibr_locations.html*.

(b) Addendum One, Underground Injection Control Program, Memorandum of Agreement Between the State of Alabama and the USEPA Region 4, signed by the Supervisor, Alabama State Oil and Gas Board on December 10, 1999, and the Regional Administrator, U.S. Environmental Protection Agency Region 4, on December 13, 1999.

(c) *Statement of Legal Authority*. ''I hereby certify, pursuant to my authority as Attorney General for the State of Alabama and for reasons set forth in this statement, that in my opinion, the laws of the State of Alabama provide the State Oil and Gas Board (hereinafter referred to as ''the Board'') adequate authority to carry out an Underground Injection Program for the control of underground injection activity related to the hydraulic fracturing of coal beds.'' Opinion by Alabama's Attorney General Office, extracted from Letter from R. Craig Kneisel, Chief, Environmental Division, Office of the Attorney General, dated October 8, 1999, to Dr. Donald F. Oltz, Supervisor, State Oil and Gas Board of Alabama, Subject: Attorney General's Statement for Final Authorization of Alabama Class II Underground injection Control Program.

(d) The Program Description for the Regulation of Hydraulic Fracturing of Coal Beds As required by 40 CFR 145.23—State Oil and Gas Board of Alabama, including Appendices A through F.

[65 FR 2897, Jan. 19, 2000]

§ 147.60 EPA-administered program—Indian lands.

(a) *Contents*. The UIC program for all classes of wells on Indian lands in Alabama is administered by EPA. This program consists of the UIC program requirements of 40 CFR parts 124, 144, 146, 148 and any additional requirements set forth in the remainder of this subpart. Injection well owners and operators, and EPA shall comply with these requirements.

(b) *Effective date*. The effective date of the UIC program for Indian lands in Alabama is November 25, 1988.

[53 FR 43086, Oct. 25, 1988, as amended at 56 FR 9411, Mar. 6, 1991]

Subpart C—Alaska

§ 147.100 State-administered program—Class II wells.

The UIC program for Class II wells in the State of Alaska, other than those on Indian lands, is the program administered by the Alaska Oil and Gas Conservation Commission approved by EPA pursuant to section 1425 of the SDWA. Notice of this approval was published in the FEDERAL REGISTER [May 6, 1986]; the effective date of this program is June 19, 1986. This program consists of the following elements, as submitted to EPA in the State's program application.

(a) *Incorporation by reference*. The requirements set forth in the State statutes and regulations cited in this paragraph are hereby incorporated by reference and made a part of the applicable UIC program under the SDWA for the State of Alaska. This incorporation by reference was approved by the Director of the Federal Register effective June 19, 1986.

(1) Alaska Statutes, Alaska Oil and Gas Conservation Act, Title 31, §§ 31.05.005 through 31.30.010 (1979 and Cum. Supp. 1984);

(2) Alaska Statutes, Administrative Procedures Act, Title 44, §§ 44.62.010 through 44.62.650 (1984);

(3) Alaska Administrative Code, Alaska Oil and Gas Conservation Commission, 20 AAC 25.005 through 20 AAC 25.570 (Supp. 1986).

(b) *Memorandum of Agreement*. The Memorandum of Agreement between EPA Region 10, and the Alaska Oil and Gas Conservation Commission, signed by the EPA Regional Administrator on January 29, 1986, as amended on June 21, 1988.

(c) *Statement of Legal Authority*. Statement from the Attorney General of the State of Alaska, signed by the Assistant Attorney General on December 10, 1985.

(d) The Program Description and any other materials submitted as part of the original application or as supplements thereto.

[51 FR 16684, May 6, 1986, as amended at 56 FR 9411, Mar. 6, 1991]

§ 147.101 EPA-administered program.

(a) *Contents*. The UIC program in the State of Alaska for Class I, III, IV, and V wells, and for all classes of wells on Indian lands, is administered by EPA. This program consists of the UIC program requirements of 40 CFR parts 124, 144, 146, 148, and any additional requirements set forth in the remainder of this subpart. Injection well owners and operators, and EPA shall comply with these requirements.

(b) *Effective dates*. The effective date of the UIC program for all non-Class II wells in Alaska and for all wells on Indian lands, is June 25, 1984.

[52 FR 17680, May 11, 1987, as amended at 56 FR 9412, Mar. 6, 1991]

§ 147.102 Aquifer exemptions.

(a) This section identifies any aquifers or their portions exempted in accordance with §§ 144.7(b) and 146.4 of this chapter at the time of program promulgation. EPA may in the future exempt other aquifers or portions, according to applicable procedures, without codifying such exemptions in this section. An updated list of exemptions will be maintained in the Regional office.

(b) The following aquifers are exempted in accordance with the provisions of §§ 144.7(b) and 146.4 of this chapter for Class II injection activities only:

(1) The portions of aquifers in the Kenai Peninsula, greater than the indicated depths below the ground surface, and described by a ¼ mile area beyond and lying directly below the following oil and gas producing fields:

(i) Swanson River Field—1700 feet.

(ii) Beaver Creek Field—1650 feet.

(iii) Kenai Gas Field—1300 feet.

(2) The portion of aquifers beneath Cook Inlet described by a ¼ mile area beyond and lying directly below the following oil and gas producing fields:

(i) Granite Point.

(ii) McArthur River Field.

(iii) Middle Ground Shoal Field.

(iv) Trading Bay Field.

(3) The portions of aquifers on the North Slope described by a ¼ mile area beyond and lying directly below the Kuparuk River Unit oil and gas producing field.

§ 147.103 Existing Class I, II (except enhanced recovery and hydrocarbon storage) and III wells authorized by rule.

Maximum injection pressure. The owner or operator shall limit injection pressure to the lesser of:

(a) A value which will not exceed the operating requirements of § 144.28(f)(3)(i) or (ii) as applicable; or

(b) A value for well head pressure calculated by using the following formula:

$$Pm = (0.733–0.433\ Sg)d$$

where:

Pm = injection pressure at the well head in pounds per square inch

Sg = specific gravity of inject fluid (unitless)

d = injection depth in feet.

§ 147.104 Existing Class II enhanced recovery and hydrocarbon storage wells authorized by rule.

(a) *Maximum injection pressure*. (1) To meet the operating requirements of § 144.28(f)(3)(ii) (A) and (B) of this chapter, the owner or operator:

(i) Shall use an injection pressure no greater than the pressure established by the Regional Administrator for the field or formation in which the well is located. The Regional Administrator shall establish maximum injection pressures after notice, opportunity for comment, and opportunity for a public hearing, according to the provisions of part 124, subpart A of this chapter, and will inform owners and operators in writing of the applicable maximum pressure; or

(ii) May inject at pressures greater than those specified in paragraph (a)(1)(i) of this section for the field or formation in which he is operating provided he submits a request in writing to the Regional Administrator, and demonstrates to the satisfaction of the Regional Administrator that such injection pressure will not violate the requirement of § 144.28(f)(3)(ii) (A) and (B). The Regional Administrator may

grant such a request after notice, opportunity for comment, and opportunity for a public hearing, according to the provisions of part 124, subpart A of this chapter.

(2) Prior to such time as the Regional Administrator establishes rules for maximum injection pressure based on data provided pursuant to paragraph (a)(2)(ii) of this section the owner or operator shall:

(i) Limit injection pressure to a value which will not exceed the operating requirements of §144.28(f)(3)(ii); and

(ii) Submit data acceptable to the Regional Administrator which defines the fracture pressure of the formation in which injection is taking place. A single test may be submitted on behalf of two or more operators conducting operations in the same formation, if the Regional Administrator approves such submission. The data shall be submitted to the Regional Administrator within 1 year of the effective date of this program.

(b) *Casing and cementing*. Where the Regional Administrator determines that the owner or operator of an existing enhanced recovery or hydrocarbon storage well may not be in compliance with the requirements of §§144.28(e) and 146.22, the owner or operator shall comply with paragraphs (b) (1) through (4) of this section, when required by the Regional Administrator:

(1) Protect USDWs by:

(i) Cementing surface casing by recirculating the cement to the surface from a point 50 feet below the lowermost USDW; or

(ii) Isolating all USDWs by placing cement between the outermost casing and the well bore; and

(2) Isolate any injection zones by placing sufficient cement to fill the calculated space between the casing and the well bore to a point 250 feet above the injection zone; and

(3) Use cement:

(i) Of sufficient quantity and quality to withstand the maximum operating pressure;

(ii) Which is resistant to deterioration from formation and injection fluids; and

(iii) In a quantity no less than 120% of the calculated volume necessary to cement off a zone.

(4) The Regional Administrator may specify other requirements in addition to or in lieu of the requirements set forth in paragraphs (b) (1) through (3) as needed to protect USDWs.

Subpart D—Arizona

§147.150 State-administered program. [Reserved]

§147.151 EPA-administered program.

(a) *Contents*. The UIC program that applies to all injection activities in Arizona, including those on Indian lands, except for Class II wells on Navajo Indian lands for which EPA has granted the Navajo Nation primacy for the SDWA Class II UIC program (as defined in §147.3400), is administered by EPA. The UIC program for Navajo Indian lands, except for Class II wells on Navajo Indian lands for which EPA has granted the Navajo Nation primacy for the SDWA Class II UIC program, consists of the requirements contained in subpart HHH of this part. The program for all injection activity except that on Navajo Indian lands consists of the UIC program requirements of 40 CFR parts 124, 144, 146, 148, and any additional requirements set forth in the remainder of this subpart. Injection well owners and operators, and EPA shall comply with these requirements.

(b) *Effective dates*. The effective date for the UIC program in Arizona, except for the lands of the Navajo Indians, is June 25, 1984. The effective date for the UIC program on the lands of the Navajo, except for Class II wells on Navajo Indian lands for which EPA has granted the Navajo Nation primacy for the SDWA Class II UIC program (as defined in §147.3400), is November 25, 1988.

[53 FR 43086, Oct. 25, 1988, as amended at 56 FR 9412, Mar. 6, 1991; 73 FR 65564, Nov. 4, 2008]

§ 147.152 Aquifer exemptions. [Reserved]

Subpart E—Arkansas

§ 147.200 State-administered program—Class I, III, IV, and V wells.

The UIC program for Class I, III, IV and V wells in the State of Arkansas, except those wells on Indian lands, is the program administered by the Arkansas Department of Pollution Control and Ecology approved by EPA pursuant to section 1422 of the SDWA. Notice of this approval was published in the FEDERAL REGISTER on July 6, 1982 (47 FR 29236); the effective date of this program is July 6, 1982. This program consists of the following elements, as submitted to EPA in the State's program application.

(a) *Incorporation by reference.* The requirements set forth in the State statutes and regulations cited in this paragraph are hereby incorporated by reference and made a part of the applicable UIC program under the SDWA for the State of Arkansas. This incorporation by reference was approved by the Director of the Federal Register on June 25, 1984.

(1) Arkansas Water and Air Pollution Control Act, Act 472 of 1949 as amended, Arkansas Statutes Annotated sections 82–1901 through 82–1943 (1976);

(2) Act 105 of 1939, Arkansas Statutes Annotated sections 53–101 through 53–130 (1971 and Supp. 1981); Act 937 of 1979, Arkansas Statutes Annotated sections 53–1301 through 53–1320 (Supp. 1981); Act 523 of 1981;

(3) Arkansas Underground Injection Control Code, Department of Pollution Control and Ecology, promulgated January 22, 1982;

(4) General Rule and Regulations, Arkansas Oil and Gas Commission (Order No. 2–39, revised July 1972);

(5) Arkansas Hazardous Waste Management Code, Department of Pollution Control and Ecology, promulgated August 21, 1981.

(b) The Memorandum of Agreement and Addendum No. 1 to the Memorandum of Agreement, between EPA Region VI and the Arkansas Department of Pollution Control and Ecology and the Arkansas Oil and Gas Commission, signed by the EPA Regional Administrator on May 25, 1982.

(c) *Statement of legal authority.* (1) Letter from Chief Attorney, Arkansas Department of Pollution Control and Ecology, to Acting Regional Administrator, EPA Region VI, ''Re: Legal Authority of the Department of Pollution Control and Ecology of the State of Arkansas to Administer an Underground Injection Control Program,'' July 29, 1981;

(2) Letter from Chief Attorney, Arkansas Department of Pollution Control and Ecology, to Acting Regional Counsel, EPA Region VI, ''Re: Addendum to Legal Statement—Underground Injection Control Program,'' October 13, 1981;

(3) Letter from General Counsel, Arkansas Oil and Gas Commission, to Acting Regional Counsel, EPA Region VI, ''Re: Supplemental Addendum to Legal Statement—Underground Injection Control Program,'' October 20, 1981;

(4) Letter from Chief Attorney, Arkansas Department of Pollution Control and Ecology, to Attorney, Office of Regional Counsel, EPA Region VI (re: status as independent legal counsel), December 31, 1981;

(5) Letter from General Counsel, Arkansas Oil and Gas Commission, to Acting Regional Counsel, EPA Region VI, ''Re: Supplemental Addendum to Legal Statement—Underground Injection Control Program,'' January 13, 1982;

(6) Letter from Chief Counsel, Arkansas Department of Pollution Control and Ecology, to Acting Regional Counsel, EPA Region VI, ''Re: Addendum to Legal Statement—Underground Injection Control Program,'' February 15, 1982;

(7) Letter from Chief Counsel, Arkansas Department of Pollution Control and Ecology, to Acting Regional Counsel, EPA Region VI, ''Re: Addendum to Legal Statement—Underground Injection Control Program,'' May 13, 1982.

(d) The Program Description and any other materials submitted as part of the application or as supplements thereto.

[49 FR 20197, May 11, 1984, as amended at 53 FR 43086, Oct. 25, 1988]

§ 147.201 State-administered program—Class II wells. [Reserved]

§ 147.205 EPA-administered program—Indian lands.

(a) *Contents*. The UIC program for all classes of wells on Indian lands in Arkansas is administered by EPA. This program consists of the UIC program requirements of 40 CFR parts 124, 144, 146, 148 and any additional requirements set forth in this subpart. Injection well owners and operators, and EPA shall comply with these requirements.

(b) *Effective date*. The effective date of the UIC program for Indian lands in Arkansas is November 25, 1988.

[53 FR 43086, Oct. 25, 1988, as amended at 56 FR 9412, Mar. 6, 1991]

Subpart F—California

§ 147.250 State-administered program—Class II wells.

The UIC program for Class II wells in the State of California, except those on Indian lands, is the program administered by the California Division of Oil and Gas, approved by EPA pursuant to SDWA section 1425.

(a) *Incorporation by reference*. The requirements set forth in the State statutes and regulations cited in this paragraph are hereby incorporated by reference and made a part of the applicable UIC program under the SDWA for the State of California. This incorporation by reference was approved by the Director of the Federal Register on June 25, 1984.

(1) California Laws for Conservation of Petroleum and Gas, California Public Resources Code Div. 3, Chapt. 1, §§ 3000–3359 (1989);

(2) California Administrative Code, title 14, §§ 1710 to 1724.10 (May 28, 1988).

(b) The Memorandum of Agreement between EPA Region IX and the California Division of Oil and Gas, signed by the EPA Regional Administrator on September 29, 1982.

(c) *Statement of legal authority*. (1) Letter from California Deputy Attorney General to the Administrator of EPA, ''Re: Legal Authority of California Division of Oil and Gas to Carry Out Class II Injection Well Program,'' April 1, 1981;

(2) Letter from California Deputy Attorney General to Chief of California Branch, EPA Region IX, ''Re: California Application for Primacy, Class II UIC Program,'' December 3, 1982.

(d) The Program Description and any other materials submitted as part of the application or as supplements thereto.

[49 FR 20197, May 11, 1984, as amended at 52 FR 17681, May 11, 1987; 56 FR 9412, Mar. 6, 1991]

§ 147.251 EPA-administered program—Class I, III, IV and V wells and Indian lands.

(a) *Contents*. The UIC program in the State of California for Class I, III, IV and V wells, and for all classes of wells on Indian lands, is administered by EPA. The program consists of the UIC program requirements of 40 CFR parts 124, 144, 146, 148, and any additional requirements set forth in the remainder of this subpart. Injection well owners and operators, and EPA shall comply with these requirements.

(b) *Effective dates*. The effective date for the UIC program for all lands in California, including Indian lands, is June 25, 1984.

[52 FR 17681, May 11, 1987, as amended at 56 FR 9412, Mar. 6, 1991]

§ 147.252 Aquifer exemptions. [Reserved]

§ 147.253 Existing Class I, II (except enhanced recovery and hydrocarbon storage) and III wells authorized by rule.

Maximum injection pressure. The owner or operator shall limit injection pressure to the lesser of:

(a) A value which will not exceed the operating requirements of § 144.28(f)(3) (i) or (ii) as applicable; or

(b) A value for well head pressure calculated by using the following formula:

$$Pm = (0.733 - 0.433\ Sg)d$$

where:

Pm = injection pressure at the well head in pounds per square inch

Sg = specific gravity of inject fluid (unitless)

d = injection depth in feet.

Subpart G—Colorado

§ 147.300 State-administered program—Class II wells.

The UIC program for Class II wells in the State of Colorado, except those wells on Indian Lands, is the program administered by the Colorado Oil and Gas Commission approved by EPA pursuant to section 1425 of the SDWA. Notice of this approval was published in the FR on April 2, 1984 (49 FR 13040); the effective date of this program is April 2, 1984. This program consists of the following elements, as submitted to EPA in the State's program application:

(a) *Incorporation by reference.* The requirements set forth in the State statutes and regulations cited in this paragraph are hereby incorporated by reference and made a part of the applicable UIC program under the SDWA for the State of Colorado. This incorporation by reference was approved by the Director of the OFR in accordance with 5 U.S.C. 552(a) and 1 CFR part 51. Copies may be obtained at the State of Colorado Oil and Gas Conservation Commission, Department of Natural Resources, Suite 380 Logan Tower Building, 1580 Logan Street, Denver, Colorado, 80203. Copies may be inspected at the Environmental Protection Agency, Region VIII, 999 18th Street, Suite 500, Denver, Colorado, 80202–2405, or at the National Archives and Records Administration (NARA). For information on the availability of this material at NARA, call 202–741–6030, or go to: *http://www.archives.gov/federal_register/code_of_federal_regulations/ibr_locations.html.*

(1) Colorado Revised Statutes, 1989 replacement volume, Section 34–60–101 through 34–60–123;

(2) Colorado Revised Statutes, 1989 replacement volume, Section 25–8–101 through 25–8–612;

(3) Rules and Regulations, Rules of Practice and Procedure, and Oil and Gas Conservation Act (As Amended) Department of Natural Resources, Oil and Gas Conservation Commission of the State of Colorado (revised July 1989);

(4) Oil and Gas Conservation Commission Revised Rules and Regulations in the 300, 400, 500, and 600 series, effective March 20, 1989.

(b) *Memorandum of agreement.* The Memorandum of Agreement between EPA Region VIII and the Colorado Oil and Gas Conservation Commission, signed by the EPA Regional Administrator on March 3, 1984 and amended on August 30, 1989.

(c) *Statement of legal authority.* (1) Letter from Colorado Assistant Attorney General to the Acting Regional Counsel, EPA Region VIII, ''Re: Class II Well Underground Injection Control Program of Colorado Oil and Gas Conservation Commission'', March 15, 1983;

(2) Letter from Colorado Assistant Attorney General to the Acting Regional Counsel, EPA Region VIII, ''Re: Class II Well Injection Control Program of Colorado Oil and Gas Conservation Commission'', April 29, 1983;

(3) Letter from Colorado Assistant Attorney General to the Acting Regional Counsel, EPA Region VIII, ''Re: Class II Underground Injection Control Program of Colorado Oil and Gas Conservation Commission, interpretation of C.R.S. 1973, 34–60–110'', July 11, 1983;

(4) Letter from Colorado Assistant Attorney General to the Acting Regional Counsel, EPA Region VIII, ''Re: Class II Well Underground Injection Control Program of Colorado Oil and Gas Conservation Commission'', February 17, 1984;

(5) Memorandum from Colorado Assistant Attorney General to the Acting Regional Counsel, EPA Region VIII, ''Re: Authority to set and enforce maximum pressure for injecting fluids into Class II wells with existing permits'', March 7, 1984.

(d) *Program description.* The Program Description and any other materials submitted as part of the application or as supplements thereto:

(1) Application and accompanying materials for approval of Colorado's UIC program for Class II wells submitted by the Director of the Colorado Oil and Gas Conservation Commission to the Regional Administrator, May 3, 1983;

(2) Supplemental amendment to Colorado's application for primacy for the UIC program for Class II wells describing the process through which the State will ensure enforceable limits for

maximum injection pressure, describing the Commission's plan of administration for Class II wells, and describing Mechanical Integrity Test procedures for Class II wells, March 7, 1984;

(3) Official correspondence concerning various program issues between the Colorado Oil and Gas Conservation Commission and EPA Region VIII, for the period from March 7, 1984 to May 8, 1989.

[56 FR 9412, Mar. 6, 1991]

§ 147.301 EPA-administered program—Class I, III, IV, V wells and Indian lands.

(a) *Contents*. The UIC program for Class I, III, IV and V wells on all lands in Colorado, including Indian lands, and for Class II wells on Indian lands, is administered by EPA. The program for all EPA-administered wells in Colorado other than Class II wells on the lands of the Ute Mountain Ute consists of the UIC program requirements of 40 CFR parts 124, 144, 146, 148, and any additional requirements set forth in the remainder of this subpart. Injection well owners and operators, and EPA shall comply with these requirements.

(b) *Effective dates*. The effective date for the UIC program on all lands in Colorado, including Indian lands, except for Class II wells on lands of the Ute Mountain Ute, is June 25, 1984.

[52 FR 17681, May 11, 1987, as amended at 56 FR 9413, Mar. 6, 1991]

§ 147.302 Aquifer exemptions.

(a) This section identifies any aquifers of their portions exempted in accordance with §§144.7(b) and 146.4 of this chapter at the time of program promulgation. EPA may in the future exempt other aquifers or portions according to applicable procedures without codifying such exemptions in this section. An updated list of exemptions will be maintained in the Regional office.

(b) For all aquifers into which existing Class II wells are injecting, those portions within a ¼ mile radius of the well are exempted for the purpose of Class II injection activities only.

§ 147.303 Existing Class I, II (except enhanced recovery and hydrocarbon storage) and III wells authorized by rule.

Maximum injection pressure. The owner or operator shall limit injection pressure to the lesser of:

(a) A value which will not exceed the operating requirements of §144.28(f)(3)(i) or (ii) as applicable; or

(b) A value for wellhead pressure calculated by using the following formula;

$$Pm = (0.733–0.433\ Sg)d$$

where:

Pm = injection pressure at the wellhead in pounds per square inch

Sg = specific gravity of injected fluid (unitless)

d = injection depth in feet.

§ 147.304 Existing Class II enhanced recovery and hydrocarbon storage wells authorized by rule.

(a) *Maximum injection pressure*. (1) To meet the operating requirements of §144.28(f)(3)(ii) (A) and (B) of this chapter, the owner or operator:

(i) Shall use an injection pressure no greater than the pressure established by the Regional Administrator for the field or formation in which the well is located. The Regional Administrator shall establish such a maximum pressure after notice, opportunity for comment, and opportunity for a public hearing, according to the provisions of part 124, subpart A of this chapter, and will inform owners and operators in writing of the applicable maximum pressure; or

(ii) May inject at pressures greater than those specified in paragraph (a)(1)(i) of this section for the field or formation in which he is operating provided he submits a request in writing to the Regional Administrator and demonstrates to the satisfaction of the Regional Administrator that such injection pressure will not violate the requirements of §144.28(f)(3)(ii) (A) and (B). The Regional Administrator may grant such a request after notice, opportunity for comment, and opportunity for a public hearing, according to the provisions of part 124, subpart A of this chapter.

(2) Prior to such time as the Regional Administrator establishes rules for maximum injection pressures based on

data provided pursuant to paragraph (a)(2)(ii) of this section the owner or operator shall:

(i) Limit injection pressure to a value which will not exceed the operating requirements of §144.28(f)(3)(ii); and

(ii) Submit data acceptable to the Regional Administrator which defines the fracture pressure of the formation in which injection is taking place. A single test may be submitted on behalf of two or more operators conducting operations in the same formation, if the Regional Administrator approves such submission. The data shall be submitted to the Regional Administrator within one year of the effective date of this program.

(b) *Casing and cementing.* Where the Regional Administrator determines that the owner or operator of an existing enhanced recovery or hydrocarbon storage well may not be in compliance with the requirements of §§144.28(e) and 146.22, the owner or operator shall comply with paragraphs (b) (1) through (4) of this section, when required by the Regional Administrator:

(1) Protect USDWs by:

(i) Cementing surface casing by recirculating the cement to the surface from a point 50 feet below the lowermost USDW; or

(ii) Isolating all USDWs by placing cement between the outermost casing and the well bore; and

(2) Isolate any injection zones by placing sufficient cement to fill the calculated space between the casing and the well bore to a point 250 feet above the injection zone; and

(3) Use cement:

(i) Of sufficient quantity and quality to withstand the maximum operating pressure;

(ii) Which is resistent to deterioration from formation and injection fluids; and

(iii) In quantity no less than 120% of the calculated volume necessary to cement off a zone.

(4) The Regional Administrator may specify other requirements in addition to or in lieu of the requirements set forth in paragraphs (b) (1) through (3) as needed to protect USDWs.

§ 147.305 Requirements for all wells.

(a) The owner or operator converting an existing well to an injection well shall check the condition of the casing with one of the following logging tools:

(1) A Pipe analysis log; or

(2) A Caliper log.

(b) The owner or operator of a new injection well cased with plastic (PVC, ABS, and others) casings shall:

(1) Not construct a well deeper than 500 feet;

(2) Use cement and additives compatible with such casing material;

(3) Cement the annular space above the injection interval from the bottom of the blank casing to the surface.

(c) The owner or operator of a newly drilled well shall install centralizers as directed by the Regional Administrator.

(d) The owner or operator shall as required by the Regional Administrator:

(1) Protect USDWs by:

(i) Setting surface casing 50 feet below the base of the lowermost USDW;

(ii) Cementing surface casing by recirculating the cement to the surface from a point 50 feet below the lowermost USDW; or

(iii) Isolating all USDWs by placing cement between the outermost casing and the well bore; and

(2) Isolate any injection zones by placing sufficient cement to fill the calculated space between the casing and the well bore to a point 250 feet above the injection zone; and

(3) Use cement:

(i) Of sufficient quantity and quality to withstand the maximum operating pressure;

(ii) Which is resistant to deterioration from formation and injection fluids; and

(iii) In a quantity no less than 120% of the calculated volume necessary to cement off a zone.

(4) The Regional Administrator may approve alternate casing and cementing practices provided that the owner or operator demonstrates that such practices will adequately protect USDWs.

(e) *Area of review.* Notwithstanding the alternatives presented in §146.6 of this chapter, the area of review shall be

a fixed radius as described in §146.6(b) of this chapter.

(f) The applicant must give separate notice of intent to apply for a permit to each owner or tenant of the land within one-quarter mile of the site. The addresses of those to whom notice is given, and a description of how notice is given, shall be submitted with the permit application. The notice shall include:

(1) Name and address of applicant;

(2) A brief description of the planned injection activities, including well location, name and depth of the injection zone, maximum injection pressure and volume, and fluid to be injected;

(3) EPA contact person; and

(4) A statement that opportunity to comment will be announced after EPA prepares a draft permit. This requirement may be waived by the Regional Administrator when he determines that individual notice to all land owners and tenants would be impractical.

Subpart H—Connecticut

§ 147.350 State-administered program.

The UIC program for all classes of wells in the State of Connecticut, except those wells on Indian lands, is the program administered by the Connecticut Department of Environmental Protection approved by EPA pursuant to section 1422 of the SDWA. Notice of this approval was published in the FR on March 26, 1984 (49 FR 11179); the effective date of this program is March 26, 1984. This program consists of the following elements, as submitted to EPA in the State's program application:

(a) *Incorporation by reference*. The requirements set forth in the State statutes and regulations cited in this paragraph are hereby incorporated by reference and made part of the applicable UIC program under the SDWA for the State of Connecticut. This incorporation by reference was approved by the Director of the OFR in accordance with 5 U.S.C. 552(a) and CFR part 51. Copies may be obtained at the State of Connecticut, Department of Environmental Protection, State Office Building, 165 Capitol Avenue, Hartford, Connecticut, 06106. Copies may be inspected at the Environmental Protection Agency, Region I, 5 Post Office Square—Suite 100, Boston, MA 02109–3912, or at the National Archives and Records Administration (NARA). For information on the availability of this material at NARA, call 202–741–6030, or go to: *http://www.archives.gov/federal_register/code_of_federal_regulations/ibr_locations.html*.

(1) Connecticut General Statutes Annotated, title 22a (Environmental Protection), chapter 439, sections 22a–1 through 22a–27 (1985 and Cumm. Supp. 1990);

(2) Connecticut General Statutes Annotated, Title 22a (Environmental Protection), Chapter 446K (1985 and Cumm. Supp. 1990).

(b) *Memorandum of Agreement*. The Memorandum of Agreement between EPA Region I and the Connecticut Department of Environmental Protection, signed by the EPA Regional Administrator on August 9, 1983.

(c) *Statement of legal authority*. (1) Statement from the Attorney General of the State of Connecticut, signed by the Attorney General on May 8, 1981;

(2) Addendum to the Statement from the Attorney General of the State of Connecticut, signed by the Attorney General on May 10, 1983.

(d) *Program Description*. The Program Description and any other materials submitted as part of the application or as supplements thereto.

[56 FR 9413, Mar. 6, 1991, as amended at 76 FR 49673, Aug. 11, 2011]

§§ 147.351–147.352 [Reserved]

§ 147.353 EPA-administered program—Indian lands.

(a) *Contents*. The UIC program for all classes of wells on Indian lands in Connecticut is administered by EPA. This program consists of the UIC program requirements of 40 CFR parts 124, 144, 146, 148, and any additional requirements set forth in the remainder of this subpart. Injection well owners and operators, and EPA shall comply with these requirements.

(b) *Effective date*. The effective date of the UIC program for Indian lands in Connecticut is November 25, 1988.

[53 FR 43086, Oct. 25, 1988, as amended at 56 FR 9413, Mar. 6, 1991]

§§ 147.354–147.359 [Reserved]

Subpart I—Delaware

§ 147.400 State-administered program.

The UIC program for all classes of wells in the State of Delaware, except those wells on Indian lands, is the program administered by the Delaware Department of Natural Resources and Environmental Control approved by EPA pursuant to section 1422 of the SDWA. Notice of this approval was published in the FR on April 5, 1984 (49 FR 13525); the effective date of this program is May 7, 1984. This program consists of the following elements, as submitted to EPA in the State's program application:

(a) *Incorporation by reference*. The requirements set forth in the State statutes and regulations cited in this paragraph are hereby incorporated by reference and made a part of the applicable UIC program under the SDWA for the State of Delaware. This incorporation by reference was approved by the Director of the OFR in accordance with 5 U.S.C. 552(a) and 1 CFR part 51. Copies may be obtained at the Delaware Department of Natural Resources and Environmental Control, 89 Kings Highway, P.O. Box 1401, Dover, Delaware, 19903. Copies may be inspected at the Environmental Protection Agency, Region III, 841 Chestnut Street, Philadelphia, Pennsylvania, 19107, or at the National Archives and Records Administration (NARA). For information on the availability of this material at NARA, call 202–741–6030, or go to: *http://www.archives.gov/federal_register/code_of_federal_regulations/ibr_locations.html*.

(1) Delaware Environmental Protection Act, (Environmental Control) 7 Delaware Code Annotated, Chapter 60, Sections 6001–6060 (Revised 1974 and Cumm. Supp. 1988);

(2) State of Delaware Regulations Governing Underground Injection Control, parts 122, 124 and 146 (Department of Natural Resources and Environmental Control), effective August 15, 1983.

(b) *Memorandum of agreement*. The Memorandum of Agreement between EPA Region III and the Delaware Department of Natural Resources and Environmental Control, signed by the EPA Regional Administrator on March 28, 1984.

(c) *Statement of legal authority*. Statement of the Delaware Attorney General for the Underground Injection Control Program, signed by the Attorney General on January 26, 1984.

(d) *Program Description*. The Program Description and any other materials submitted as part of the application (August 10, 1983), or as supplements thereto (October 14, 1983).

[56 FR 9413, Mar. 6, 1991]

§§ 147.401–147.402 [Reserved]

§ 147.403 EPA-administered program—Indian lands.

(a) *Contents*. The UIC program for all classes of wells on Indian lands in Delaware is administered by EPA. This program consists of the UIC program requirements of 40 CFR parts 124, 144, 146, 148, and any additional requirements set forth in the remainder of this subpart. Injection well owners and operators and EPA shall comply with these requirements.

(b) *Effective date*. The effective date of the UIC program for Indian lands in Delaware is November 25, 1988.

[53 FR 43086, Oct. 25, 1988, as amended at 56 FR 9413, Mar. 6, 1991]

§§ 147.404–147.449 [Reserved]

Subpart J—District of Columbia

§ 147.450 State-administered program. [Reserved]

§ 147.451 EPA-administered program.

(a) *Contents*. The UIC program for the District of Columbia, including any Indian lands in the District, is administered by EPA. This program consists of the UIC program requirements of 40 CFR parts 124, 144, 146, 148, and any additional requirements set forth in the remainder of this subpart. Injection well owners and operators, and EPA shall comply with these requirements.

(b) *Effective date*. The effective date of the UIC program for Indian lands in the District of Columbia is November 25, 1988. The effective date for the UIC

program in the rest of the District is June 25, 1984.

[53 FR 43087, Oct. 25, 1988, as amended at 56 FR 9413, Mar. 6, 1991]

§ 147.452 Aquifer exemptions. [Reserved]

Subpart K—Florida

§ 147.500 State-administered program—Class I, III, IV, and V wells.

The UIC program for Class I, III, IV, and V wells in the State of Florida, except for those on Indian lands is administered by the Florida Department of Environmental Regulations, approved by EPA pursuant to section 1422 of the SDWA. Notice of this approval was published in the FEDERAL REGISTER on February 7, 1983 (48 FR 5556); the effective date of this program is March 9, 1983. This program consists of the following elements, as submitted to EPA in the State's program application:

(a) *Incorporation by reference*. The requirements set forth in the State statutes and regulations cited in this paragraph are hereby incorporated by reference and made a part of the applicable UIC program under the SDWA for the State of Florida. This incorporation by reference was approved by the Director of the Federal Register on June 25, 1984.

(1) Florida Air and Water Pollution Control Act, Florida Statutes Annotated sections 403.011 through 403.90 (1973 and Supp. 1983);

(2) Chapter 17–28, Underground Injection Control, Florida Administrative Code (April 27, 1989).

(b) *Other laws*. The following statutes and regulations although not incorporated by reference, also are part of the approved State-administered program:

(1) Administrative Procedures Act, Florida Statutes Chapter 120;

(2) Florida Administrative Code, Chapter 17–1 (1982) (Administrative Procedures Act);

(3) Florida Administrative Code, Chapter 17–3 (1982) (Water Quality Standards);

(4) Florida Administrative Code, Chapter 17–4 (1982) (Permits);

(5) Florida Administrative Code, Chapter 28–5 (1982) (Decisions Determining Substantial Interests);

(6) Florida Administrative Code, Chapter 28–6 (1982) (Licensing);

(c) The Memorandum of Agreement between EPA Region IV and the Florida Department of Environmental Regulation, signed by the EPA Regional Administrator on March 31, 1983.

(d) *Statement of legal authority*. (1) ''Statement of Legal Authority for Implementation of Underground Injection Control Program'' and accompanying certifications, signed by General Counsel for the Florida Department of Environmental Regulation, January 14, 1982;

(2) ''Addendum to Statement of Legal Authority for Implementation of Underground Injection Control Program'' and accompanying certifications, signed by Acting General Counsel for the Florida Department of Environmental Regulation, September 20, 1982.

(e) The Program Description and any other materials submitted as part of the original application or as supplements thereto.

[49 FR 20197, May 11, 1984, as amended at 53 FR 43087, Oct. 25, 1988; 56 FR 9414, Mar. 6, 1991]

§ 147.501 EPA-administered program—Class II wells and Indian lands.

(a) *Contents*. The UIC program for all classes of wells on Indian lands and for Class II wells on non-Indian lands in the State of Florida is administered by EPA. This program consists of the UIC program requirements of 40 CFR parts 124, 144, 146, 148, and any additional requirements set forth in the remainder of this subpart. Injection well owners and operators, and EPA shall comply with these requirements.

(b) *Effective dates*. The effective date of the UIC program for Indian lands in Florida is November 25, 1988. The effective date for Class II wells on non-Indian lands is December 30, 1984.

[53 FR 43087, Oct. 25, 1988, as amended at 56 FR 9414, Mar. 6, 1991]

§ 147.502 Aquifer exemptions. [Reserved]

§ 147.503 Existing Class II (except enhanced recovery and hydrocarbon storage) wells authorized by rule.

Maximum injection pressure. To meet the operating requirements of § 144.28(f)(3)(i) of this chapter, the owner or operator shall use an injection pressure at the well head no greater than the pressure calculated using the following formula:

$$Pm = (0.733 - 0.433\ Sg)d$$

where:

Pm = injection pressure at the well head in pounds per square inch

Sg = specific gravity of injected fluid (unitless)

d = injection depth in feet.

[49 FR 45306, Nov. 15, 1984]

§ 147.504 Existing Class II enhanced recovery and hydrocarbon storage wells authorized by rule.

(a) *Maximum injection pressure.* (1) To meet the operating requirements of § 144.28(f)(3)(ii) (A) and (B) of this chapter, the owner or operator:

(i) Shall use an injection pressure no greater than the pressure established by the Regional Administrator for the field or formation in which the well is located. The Regional Administrator shall establish such a maximum pressure after notice, opportunity for comment and opportunity for a public hearing, according to the provisions of part 124, subpart A of this chapter, and will inform owners and operators in writing of the applicable maximum pressure; or

(ii) May inject at pressure greater than those specified in paragraph (a)(1)(i) of this section for the field or formation in which he is operating provided he submits a request in writing to the Regional Administrator, and demonstrates to the satisfaction of the Regional Administrator that such injection pressure will not violate the requirement of § 144.28(f)(3)(ii) (A) and (B). The Regional Administrator may grant such a request after notice, opportunity for comment, and opportunity for a public hearing, according to the provisions of part 124, subpart A of this chapter.

(2) Prior to such time as the Regional Administrator establishes rules for maximum injection pressure based on data provided pursuant to paragraph (a)(2)(ii) of this section the owner or operator shall:

(i) Limit injection pressure to a value which will not exceed the operating requirements of § 144.28(f)(3)(ii); and

(ii) Submit data acceptable to the Regional Administrator which defines the fracture pressure of the formation in which injection is taking place. A single test may be submitted on behalf of two or more operators conducting operations in the same formation, if the Regional Administrator approves such submission. The data shall be submitted to the Regional Administrator within 1 year of the effective date of this program.

(b) *Casing and cementing.* Where the Regional Administrator determines that the owner or operator of an existing enhanced recovery or hydrocarbon storage well may not be in compliance with the requirements of §§ 144.28(e) and 146.22, the owner or operator shall, when required by the Regional Administrator:

(1) Protect USDWs by:

(i) Cementing surface casing by recirculating the cement to the surface from a point 50 feet below the lowermost USDW; or

(ii) Isolating all USDWs by placing cement between the outermost casing and the well bore; and

(2) Isolate any injection zones by placing sufficient cement to fill the calculated space between the casing and the well bore to a point 250 feet above the injection zone; and

(3) Use cement:

(i) Of sufficient quantity and quality to withstand the maximum operating pressure;

(ii) Which is resistant to deterioration from formation and injection fluids; and

(iii) In a quantity no less than 120% of the calculated volume necessary to cement off a zone.

(4) Comply with other requirements which the Regional Administrator may specify either in addition to or in lieu

of the requirements set forth in paragraphs (b)(1) through (3) of this section as needed to protect USDWs.

(c) *Area of review*. Notwithstanding the alternatives presented in § 146.06 of this chapter, the area of review shall be a minimum fixed radius as described in § 146.06(b) of this chapter.

(The information collection requirements contained in paragraph (a)(2)(ii) were appoved by the Office of Management and Budget under control number 2040–0042)

[49 FR 45306, Nov. 15, 1984]

Subpart L—Georgia

§ 147.550 State-administered program.

The UIC program for all classes of wells in the State of Georgia, except those wells on Indian lands, is the program administered by the Georgia Department of Natural Resources, Environmental Protection Division approved by EPA pursuant to section 1422 of the SDWA. Notice of this approval was published in the FEDERAL REGISTER on April 19, 1984 (49 FR 15553); the effective date of this program is May 21, 1984. This program consists of the following elements, as submitted to EPA in the State's program application:

(a) *Incorporation by reference*. The requirements set forth in the State statutes and regulations cited in this paragraph are hereby incorporated by reference and made a part of the applicable UIC program under the SDWA for the State of Georgia. This incorporation by reference was approved by the Director of the OFR in accordance with 5 U.S.C. 552(a) and 1 CFR part 51. Copies may be obtained at the Georgia Department of Natural Resources, Environmental Protection Division, 270 Washington Street, SW., Atlanta, Georgia, 30334. Copies may be inspected at the Environmental Protection Agency, Region IV, 345 Courtland Street, NE., Atlanta, Georgia, 30365, or at the National Archives and Records Administration (NARA). For information on the availability of this material at NARA, call 202–741–6030, or go to: *http://www.archives.gov/federal_register/code_of_federal_regulations/ibr_locations.html*.

(1) Oil and Gas and Deep Drilling Act of 1975, Official Code of Georgia Annotated (O.C.G.A.) §§ 12–4–40 through 12–4–53 (1988);

(2) Ground Water Use Act of 1972, O.C.G.A. §§ 12–5–90 through 12–5–107 (1988);

(3) Water Well Standards Act of 1985, O.C.G.A. §§ 12–5–120, through 12–5–138 (1988);

(4) Georgia Administrative Procedure Act, O.C.G.A. §§ 50–13–1 through 50–13–22 (Reprinted from the O.C.G.A. and 1988 Cumm. Supp.);

(5) Georgia Water Quality Control Act, O.C.G.A. §§ 12–5–20 through 12–5–53 (1988);

(6) Georgia Hazardous Waste Management Act, O.C.G.A. §§ 12–8–60 through 12–8–83 (1988);

(7) Georgia Safe Drinking Water Act of 1977, O.C.G.A. §§ 12–5–170 through 12–5–193 (1988);

(8) Rules of Georgia Department of Natural Resources, Environmental Protection Division, Water Quality Control, GA. COMP. R. & REGS. Chapter 391–3–6–.13 (Revised July 28, 1988).

(b) *Memorandum of Agreement*. The Memorandum of Agreement between EPA Region IV and the State of Georgia, signed March 1, 1984.

(c) *Statement of legal authority*. (1) Unofficial Opinion of the Georgia Attorney General, Op. Atty. Gen. 080–24, June 12, 1980;

(2) Underground Injection Control Program, Attorney General's Statement, February 4, 1982;

(3) Amended Attorney General's Statement Relating to Authority of the State of Georgia to Implement an Underground Injection Control Program, April 22, 1983;

(4) Letter to EPA Office of General Counsel from Senior Assistant Attorney General ''Re: State UIC Program'', July 13, 1983.

(d) *Program Description*. The Program Description and any other materials submitted as part of the application or as supplements thereto.

[56 FR 9414, Mar. 6, 1991; 56 FR 14150, Apr. 5, 1991]

§§ 147.551–147.552 [Reserved]

§ 147.553 EPA-administered program—Indian lands.

(a) *Contents.* The UIC program for all classes of wells on Indian lands in the State of Georgia is administered by EPA. This program consists of the UIC program requirements of 40 CFR parts 124, 144, 146, 148, and any additional requirements set forth in the remainder of this subpart. Injection well owners and operators, and EPA shall comply with these requirements.

(b) *Effective date.* The effective date of the UIC program for Indian lands in Georgia is November 25, 1988.

[53 FR 43087, Oct. 25, 1988, as amended at 56 FR 9414, Mar. 6, 1991]

§§ 147.554–147.559 [Reserved]

Subpart M—Hawaii

§ 147.600 State-administered program. [Reserved]

§ 147.601 EPA-administered program.

(a) *Contents.* The UIC program for the State of Hawaii, including all Indian lands, is administered by EPA. This program consists of the UIC program requirements of 40 CFR parts 124, 144, 146, 148, and any additional requirements set forth in the remainder of this subpart. Injection well owners and operators, and EPA shall comply with these requirements.

(b) *Effective date.* The effective date of the UIC program for Indian lands in Hawaii is November 25, 1988. The effective date for the UIC program for all other lands in Hawaii is December 30, 1984.

[53 FR 43087, Oct. 25, 1988, as amended at 56 FR 9414, Mar. 6, 1991]

Subpart N—Idaho

§ 147.650 State-administered program—Class I, III, IV, and V wells.

The UIC program for Class I, III, IV, and V wells in the state of Idaho, other than those on Indian lands, is the program administered by the Idaho Department of Water Resources, approved by the EPA pursuant to section 1422 of the Safe Drinking Water Act. Notice of this approval was published in the FEDERAL REGISTER on June 7, 1985; the effective date of this program is July 22, 1985. This program consists of the following elements, as submitted to the EPA in Idaho's program application. *Note:* Because the EPA subsequently transferred the Class II UIC program from the Idaho Department of Water Resources to the EPA, references to Class II in the following elements are no longer relevant or applicable for federal UIC purposes.

(a) *Incorporation by reference.* The requirements set forth in the State statutes and regulations cited in this paragraph are hereby incorporated by reference and made a part of the applicable UIC program under the SDWA for the State of Idaho. This incorporation by reference was approved by the Director of the Federal Register effective July 22, 1985.

(1) Public Writings, Title 9, Chapter 3, Idaho Code, sections 9–301 through 9–302 (Bobbs-Merrill 1979);

(2) Crimes and Punishments, Title 18, Chapter 1, Idaho Code, sections 18–113 through 18–114 (Bobbs-Merrill 1979 and Supp. 1984);

(3) Department of Health and Welfare, Title 39, Chapter 1, Idaho Code, Chapter 39–108 (Bobbs-Merrill 1977);

(4) Drainage-Water Rights and Reclamation, Title 42, Chapter 2, Idaho Code sections 42–237(e); section 42–238 (Bobbs-Merrill 1977 and Supp. 1984);

(5) Department of Water Resources-Water Resources Board, Title 42, Chapter 17, Idaho Code, sections 42–1701, 42–1703, 42–1735 (Bobbs-Merrill 1977, section 42–1701A (Supp. 1984);

(6) Director of Department of Water Resources, Title 42, Chapter 18, Idaho Code, sections 42–1801 through 42–1805 (Bobbs-Merrill 1977);

(7) Waste Disposal and Injection Wells, Title 42, Chapter 39, Idaho Code, sections 42–3901 through 42–3914 (Bobbs-Merrill 1977), sections 42–3915 through 42–3919 (Supp. 1984);

(8) Idaho Trade Secrets Act, Title 48, Chapter 8, Idaho Code, sections 48–801 through 48–807 (Bobbs-Merrill 1977 and Supp. 1984);

(9) Administrative Procedure, Title 67, Chapter 52, Idaho Code, sections 67–5201 through 67–5218 (Bobbs-Merrill 1980 and Supp. 1984);

(10) Idaho Radiation Control Regulations (IRCR section 1–9002.70; sections 1–9100 through 1–9110, Department of Health and Welfare (May 1981);

(11) Rules and Regulations: Construction and Use of Injection Wells, Idaho Department of Water Resources, Rules 1 through 14 (August 1984);

(12) Rules and Regulations: Practice and Procedures, Idaho Department of Water Resources, Rules 1 through 14 (October 1983).

(b) The Memorandum of Agreement between EPA and Region X and the Idaho Department of Water Resources signed by the EPA Regional Administrator on February 11, 1985.

(c) *Statement of legal authority*. (1) The Idaho Attorney General's Statement for the Underground Injection Control Program, October 31, 1984.

(2) Letter from David J. Barber, Deputy Attorney General, Idaho Department of Water Resources to Harold Scott, EPA, Region 10, revising the Attorney General's Statement, February 14, 1985.

(d) The Program Description and any other materials submitted as part of the application or as supplements thereto.

[50 FR 23957, June 7, 1985, as amended at 83 FR 36435, July 30, 2018]

§ 147.651 EPA-administered program—Class II wells and all wells on Indian lands.

(a) *Contents*. The EPA administers the UIC program for all classes of wells on Indian lands and for Class II wells on non-Indian lands in the state of Idaho. This program consists of the UIC program requirements of 40 CFR parts 124, 144, 146, 148, and any additional requirements set forth in the remainder of this subpart. Injection well owners and operators, and the EPA shall comply with these requirements.

(b) *Effective dates*. The effective date of the UIC program for Indian lands in Idaho is June 11, 1984. The effective date of the UIC program for Class II wells on non-Indian lands in Idaho is July 30, 2018.

[83 FR 36435, July 30, 2018]

§ 147.652 Aquifer exemptions. [Reserved]

Subpart O—Illinois

§ 147.700 State-administered program—Class I, III, IV, and V wells.

The UIC program for Class I, III, IV and V wells in the State of Illinois, except those on Indian lands, is the program administered by the Illinois Environmental Protection Agency, approved by EPA pursuant to section 1422 of the SDWA. Notice of the approval was published in the FEDERAL REGISTER on February 1, 1984 (49 FR 3991); the effective date of this program is March 3, 1984. This program consists of the following elements, as submitted to EPA in the State's program application:

(a) *Incorporation by reference*. The requirements set forth in the state statutes and regulations cited in this paragraph are hereby incorporated by reference and made a part of the applicable UIC program under the SDWA for the State of Illinois. This incorporation by reference was approved by the Director of the Federal Register on June 25, 1984.

(1) Illinois Environmental Protection Act, Illinois ch. 111½, sections 1001 to 1051 (Smith-Hurd 1977 Revised Statutes and Supp. 1983), as amended by Public Act No. 83–431, 1983 Illinois Legislative Service, pages 2910 to 2916 (West);

(2) Illinois Pollution Control Board Rules and Regulations at Title 35, Illinois Administrative Code, Chapter I, Part 700, Outline of Waste Disposal Regulations; Part 702, RCRA and UIC Permit Programs; Part 704, UIC Permit Program; Part 705, Procedures for Permit Issuance and Part 730, Underground Injection Control Operating Requirements as amended by IPCB Order No. R–83039 on December 15, 1983.

(b) The Memorandum of Agreement between EPA Region V and the Illinois Environmental Protection Agency, signed by the EPA Regional Administrator on March 22, 1984.

(c) *Statement of legal authority*. Letter from Illinois Attorney General to Regional Administrator, EPA Region V, and attached statement, December 16, 1982.

(d) The Program Description and any other materials submitted as part of the application or as supplements thereto.

[49 FR 20197, May 11, 1984, as amended at 53 FR 43087, Oct. 25, 1988]

§ 147.701 State-administered program—Class II wells.

The UIC program for Class II wells in the State of Illinois, except those on Indian lands, is the program administered by the Illinois Environmental Protection Agency, approved by EPA pursuant to section 1425 of the SDWA. Notice of the approval was published in the FEDERAL REGISTER on February 1, 1984 (49 FR 3990); the effective date of this program is March 3, 1984. This program consists of the following elements, as submitted to EPA in the state's program application:

(a) *Incorporation by reference.* The requirements set forth in the State Statutes and regulations cited in this paragraph are hereby incorporated by reference and made a part of the applicable UIC program under the SDWA for the State of Illinois. This incorporation by reference was approved by the Director of the Federal Register on June 25, 1984.

(1) Conservation of Oil and Gas, etc., Illinois Revised Statutes ch. 96½, sections 5401 to 5457 (Smith-Hurd 1979 and Supp. 1983), as amended by Public Act No. 83–1074 1983 Illinois Legislative Service pages 7183 to 7185 (West);

(2) Illinois Environmental Protection Act, Illinois Revised Statutes ch. 111½, sections 1001–1051 (Smith-Hurd 1977 and Supp. 1983), as amended by Public Act No. 83–431, 1983 Illinois Legislative Services pages 2910 to 2916 (West);

(3) Illinois Revised Statutes ch. 100½, section 26 (Smith-Hurd Supp. 1983);

(4) Illinois Department of Mines and Minerals Regulations for the Oil and Gas Division, Rules I, II, IIA, III, V, VII, and IX (1981).

(b) The Memorandum of Agreement between EPA Region V and the Illinois Department of Mines and Minerals, signed by the EPA Regional Administrator on March 22, 1984.

(c) *Statement of legal authority.* ''Certification of Legal Authority,'' signed by State Attorney, Richland County, Illinois, May 5, 1982.

(d) The Program Description and any other materials submitted as part of the application or as supplements thereto.

[49 FR 20197, May 11, 1984, as amended at 53 FR 43087, Oct. 25, 1988]

§ 147.703 EPA-administered program—Indian lands.

(a) *Contents.* The UIC program for all classes of wells on Indian lands in the State of Illinois is administered by EPA. This program consists of the UIC program requirements of 40 CFR parts 124, 144, 146, 148, and any additional requirements set forth in the remainder of this subpart. Injection well owners and operators, and EPA shall comply with these requirements.

(b) *Effective dates.* The effective date for the UIC program for Indian lands is November 25, 1988.

[53 FR 43087, Oct. 25, 1988, as amended at 56 FR 9414, Mar. 6, 1991]

Subpart P—Indiana

§ 147.750 State-administered program—Class II wells.

The UIC program for Class II injection wells in the State of Indiana on non-Indian lands is the program administered by the Indiana Department of Natural Resources (INDR) approved by the EPA pursuant to section 1425 of the SDWA. Notice of this approval was published in the FR on August 19, 1991; the effective date of this program is August 19, 1991. This program consists of the following elements, as submitted to EPA in the State's program application:

(a) *Incorporation by reference.* The requirements set forth in the State statutes and regulations cited in this paragraph are hereby incorporated by reference and made a part of the applicable UIC program under the SDWA for the State of Indiana. This incorporation by reference was approved by the Director of the FR in accordance with 5 U.S.C. 552(a) and 1 CFR part 51. Copies may be obtained at the Indiana Department of Natural Resources, Division of Oil and Gas, 402 West Washington Street, room 293, Indianapolis, Indiana, 46204. Copies may be inspected

at the Environmental Protection Agency, Region V, 77 West Jackson Boulevard, Chicago, Illinois, 60604, or at the National Archives and Records Administration (NARA). For information on the availability of this material at NARA, call 202–741–6030, or go to: *http://www.archives.gov/federal_register/code_of_federal_regulations/ibr_locations.html*.

(1) Indiana Code, title 4, article 21.5, chapters 1 through 6 (1988).

(2) West's Annotated Indiana Code, title 13, article 8, chapters 1 through 15 (1990 and Cumm. Supp. 1990).

(3) Indiana Administrative Code, title 310, article 7, rules 1 through 3 (Cumm. Supp. 1991).

(b) *Memorandum of agreement*. The Memorandum of Agreement between EPA Region V and the Indiana Department of Natural Resources signed by the EPA Regional Administrator on February 18, 1991.

(c) *Statement of legal authority*. Statement and Amendment to the Statement from the Attorney General of the State of Indiana, signed on July 12, 1990, and December 13, 1990, respectively.

(d) The Program Description and any other materials submitted as part of the original application or as supplements thereto.

[56 FR 41072, Aug. 19, 1991, as amended at 62 FR 1834, Jan. 14, 1997]

§ 147.751 EPA-administered program.

(a) *Contents*. The UIC program for all classes of wells on Indian lands, and for Class I, III, IV, and V wells on non-Indian lands in the State of Indiana is administered by the EPA. The program consists of the UIC program requirements of 40 CFR parts 124, 144, 146, and 148 and the additional requirements set forth in the remainder of this subpart. Injection well owners and operators, and EPA shall comply with these requirements.

(b) *Effective dates*. The effective date for the UIC program on Indian lands is November 25, 1988. The effective date of the UIC program for the rest of Indiana is June 25, 1984.

[53 FR 43087, Oct. 25, 1988, as amended at 56 FR 9414, Mar. 6, 1991; 56 FR 41072, Aug. 19, 1991]

§ 147.752 Aquifer exemptions. [Reserved]

§ 147.753 Existing Class I and III wells authorized by rule.

Maximum injection pressure. The owner or operator shall limit injection pressure to the lessor of:

(a) A value which will not exceed the operating requirements of § 144.28(f)(3)(i) or (ii) as applicable; or

(b) A value for well head pressure calculated by using the following formula:

$$Pm = (0.800–0.433\ Sg)d$$

where:

Pm = injection pressure at the wellhead in pounds per square inch

Sg = specific gravity of injected fluid (unitless)

d = injection depth in feet.

[49 FR 20197, May 11, 1984, as amended at 56 FR 41072, Aug. 19, 1991]

Subpart Q—Iowa

§ 147.800 State-administered program. [Reserved]

§ 147.801 EPA-administered program.

(a) *Contents*. The UIC program for the State of Iowa, including all Indian lands, is administered by EPA. This program consists of the UIC program requirements of 40 CFR parts 124, 144, 146, 148, and any additional requirements set forth in the remainder of this subpart. Injection well owners and operators, and EPA shall comply with these requirements.

(b) *Effective dates*. The effective date for the UIC program for all lands in Iowa, including Indian lands, is June 25, 1984.

[52 FR 17681, May 11, 1987, as amended at 56 FR 9415, Mar. 6, 1991]

§ 147.802 Aquifer exemptions. [Reserved]

Subpart R—Kansas

§ 147.850 State-administered program—Class I, III, IV and V wells.

The UIC program for Class I, III, IV and V wells in the State of Kansas, except those on Indian lands as described in § 147.860, is the program administered by the Kansas Department of

Health and Environment, approved by EPA pursuant to section 1422 of the SDWA. Notice of this approval was published in the FEDERAL REGISTER on December 2, 1983 (48 FR 54350); the effective date of this program is December 2, 1983. This program consists of the following elements, as submitted to EPA in the State's program application.

(a) *Incorporation by reference.* The requirements set forth in the State statutes and regulations cited in this paragraph are hereby incorporated by reference and made a part of the applicable UIC program under the SDWA for the State of Kansas. This incorporation by reference was approved by the Director of the OFR in accordance with 5 U.S.C. 552(a) and 1 CFR part 51. Copies may be obtained at the Kansas Department of Health and Environment, Charles Curtis State Office Building, 1000 SW. Jackson, Topeka, Kansas 66612. Copies may be inspected at EPA Region 7, 11201 Renner Boulevard, Lenexa, Kansas 66219, or at the National Archives and Records Administration (NARA). For information on the availability of this material at NARA, call 202–741–6030, or go to: *http://www.archives.gov/federal_register/code_of_federal_regulations/ibr_locations.html.*

(1) Chapter 28, Article 46, Underground Injection Control Regulations, Kansas Administrative Regulations §§ 28–46–1 through 28–46–42 (1986 and Supp. 1987);

(2) Chapter 28, Article 43, Construction, operation, monitoring and abandonment of salt solution mining wells, Kansas Administrative Regulations §§ 28–43–1 through 28–43–10 (1986);

(3) Kansas Statutes Annotated §§ 65–161, 65–164 through 65–166a, 65–171d (1980 and Cumm. Supp. 1989).

(b) *Other laws.* The following statutes and regulations, although not incorporated by reference except for the select sections identified in paragraph (a) of this section, are also part of the approved State-administered program: Kansas Statutes Annotated §§ 65–161 through 65–171(w), (1980 and Supp. 1983).

(c) *Memorandum of Agreement.* (1) The Memorandum of Agreement between EPA Region VII and the Kansas Department of Health and Environment, signed by the EPA Regional Administrator on July 29, 1983;

(2) Addendum No. 1 of the Memorandum of Agreement, signed by the EPA Regional Administrator on August 29, 1983.

(d) *Statement of legal authority.* (1) ''Statement of Attorney General'', signed by the Attorney General of the State of Kansas, November 25, 1981;

(2) ''Supplemental Statement of Attorney General'', signed by the Attorney General of the State of Kansas, undated (one page).

(e) *Program description.* The program description and any other materials submitted as part of the application or supplements thereto.

[49 FR 45306, Nov. 15, 1984, as amended at 56 FR 9415, Mar. 6, 1991; 78 FR 37978, June 25, 2013]

§ 147.851 State-administered program—Class II wells.

The UIC program for Class II wells in the State of Kansas, except those on Indian lands as described in § 147.860, is the program administered by the Kansas Corporation Commission and the Kansas Department of Health and Environment, approved by EPA pursuant to section 1425 of the SDWA. Notice of this approval was published in the FEDERAL REGISTER on February 8, 1984 (49 FR 4735); the effective date of this program is February 8, 1984. This program consists of the following elements, as submitted to EPA in the State's program application.

[49 FR 45306, Nov. 15, 1984]

§§ 147.852–147.859 [Reserved]

§ 147.860 EPA-administered program—Indian lands.

(a) *Contents.* The UIC program for all classes of wells on Indian lands in the State of Kansas is administered by EPA. This program consists of the UIC program requirements of 40 CFR parts 124, 144, 146, 148, and any additional requirements set forth in the remainder of this subpart. Injection well owners and operators, and EPA shall comply with these requirements.

(b) *Effective date*. The effective date of the UIC program for Indian lands in Kansas is December 30, 1984.

[49 FR 45307, Nov. 15, 1984, as amended at 56 FR 9415, Mar. 6, 1991]

Subpart S—Kentucky

§ 147.900 State-administered program—Class II wells.

The UIC program for Class II injection wells in the Commonwealth of Kentucky, except for those on Indian lands, is the program administered by the Kentucky Department of Natural Resources, Division of Oil and Gas approved by the EPA pursuant to section 1425 of the SDWA. Notification of this approval was published in the FEDERAL REGISTER on December 28, 2016; the effective date of this program is January 27, 2017. Table 1 to paragraph (a) of this section is the table of contents of the Kentucky state statutes and regulations incorporated as follows by reference. This program consists of the following elements, as submitted to the EPA in the state's program application.

(a) *Incorporation by reference*. The requirements set forth in the Kentucky State statutes and regulations cited in the binder entitled ''EPA-Approved Commonwealth of Kentucky Safe Drinking Water Act § 1425 Underground Injection Control (UIC) Program Statutes and Regulations for Class II wells,'' dated August 2016 is hereby incorporated by reference and made a part of the applicable UIC program under the SDWA for the Commonwealth of Kentucky. This incorporation by reference was approved by the Director of the Federal Register in accordance with 5 U.S.C. 552(a) and 1 CFR part 51. Copies of the Kentucky regulations may be obtained or inspected at the Kentucky Department of Natural Resources, Division of Oil and Gas, 3th Floor, 300 Sower Blvd., Frankfort, Kentucky 40601, (315) 532–0191; at the U.S. Environmental Protection Agency, Region 4, 61 Forsyth Street SW., Atlanta, Georgia 30303–8960, (404) 562–8190; or at the National Archives and Records Administration (NARA). For information on availability of this material at NARA, call (202) 741–6030, or go to: *http://www.archives.gov/federal-register/cfr/ibr-locations.html*.

TABLE 1 TO PARAGRAPH (a)—EPA-APPROVED KENTUCKY SDWA § 1425 UNDERGROUND INJECTION CONTROL PROGRAM STATUTES AND REGULATIONS FOR CLASS II WELLS

State citation	Title/subject	State effective date	EPA approval date [1]
Kentucky Revised Statutes Chapter 13B.	Kentucky Administrative Procedures Act KRS 13B.005 to 13B.170.	June 15, 1994	12/28/2016, 81 FR 95480
Kentucky Revised Statutes 353.180.	Requirements for plugging abandoned well—Bids—Remedy for possessor of adjacent land or for department.	June 24, 2015	12/28/2016, 81 FR 95480
Kentucky Revised Statutes 353.510.	Definition of KRS 353.500 to 353.720	July 15, 2010	12/28/2016, 81 FR 95480
Kentucky Revised Statutes 353.520.	Territorial application of KRS 353.500 to 353.720—Waste of oil and gas prohibited.	June 24, 2003	12/28/2016, 81 FR 95480
Kentucky Revised Statutes 353.550.	Specific authority over oil and gas operators	July 15, 1996	12/28/2016, 81 FR 95480
Kentucky Revised Statutes 353.570.	Permit Required—May authorize operation prior to issuance of permit.	July 15, 1998	12/28/2016, 81 FR 95480
Kentucky Revised Statutes 353.590.	Application for permit—Fees-Plat-Bond to insure plugging—Schedule—Blanket bonds-Corporate guarantee—Use of forfeited funds—Oil and gas well. plugging fund—Wells not included in ''water supply well.''.	July 15, 2010	12/28/2016, 81 FR 95480
Kentucky Revised Statutes 353.591.	Purpose and application of KRS 353.592 and 353.593.	July 15, 1986	12/28/2016, 81 FR 95480
Kentucky Revised Statutes 353.592.	Powers of the department	June 24, 2015	12/28/2016, 81 FR 95480
Kentucky Revised Statutes 353.593.	Appeals	July 15, 1996	12/28/2016, 81 FR 95480
Kentucky Revised Statutes 353.992.	Penalties	July 15, 1986	12/28/2016, 81 FR 95480
805 Kentucky Administrative Regulations 1:020.	Providing Protection for USDWs	August 9, 2007	12/28/2016, 81 FR 95480

TABLE 1 TO PARAGRAPH (a)—EPA-APPROVED KENTUCKY SDWA § 1425 UNDERGROUND INJECTION CONTROL PROGRAM STATUTES AND REGULATIONS FOR CLASS II WELLS—Continued

State citation	Title/subject	State effective date	EPA approval date [1]
805 Kentucky Administrative Regulations 1:030.	Well location and as-drilled location plat, preparation, form and contents.	October 23, 2009	12/28/2016, 81 FR 95480
805 Kentucky Administrative Regulations 1:060.	Plugging wells; non-coal-bearing strata	June 11, 1975	12/28/2016, 81 FR 95480
805 Administrative Regulations 1:070.	Plugging wells; coal bearing strata	October 23, 1975	12/28/2016, 81 FR 95480
805 Kentucky Administrative Regulations 1:110.	Underground Injection Control	April 4, 2008	12/28/2016, 81 FR 95480

[1] In order to determine the EPA effective date for a specific provision listed in this table, consult the **Federal Register** document cited in this column for the particular provision.

(b) *Memorandum of Agreement (MOA)*. The MOA between EPA Region 4 and the Commonwealth of Kentucky Department of Natural Resources signed by EPA Regional Administrator on October 20, 2015.

(c) *Statements of Legal Authority*. ''Underground Injection Control Program, Attorney General's Statement,'' signed by General Counsel of Kentucky Energy and Environmental Cabinet on June 7, 2010.

(d) *Program Description*. The Program Description submitted as part of Kentucky's application, and any other materials submitted as part of this application or as a supplement thereto.

[81 FR 95483, Dec. 28, 2016]

§ 147.901 EPA-administered program—Class I, III, IV, V, and VI wells and Indian lands.

(a) *Contents*. The UIC program for Class I, III, IV, V and VI wells and all wells on Indian lands in the Commonwealth of Kentucky is administered by the EPA. This program consists of the UIC program requirements of 40 CFR parts 124, 144, 146, 148, and any additional requirements set forth in the remainder of this subpart. Injection well owners and operators, and EPA shall comply with these requirements.

(b) *Effective dates*. The effective date for the UIC program on Indian lands is November 25, 1988. The effective date for the UIC program in the remainder of Kentucky is June 25, 1984.

[53 FR 43087, Oct. 25, 1988, as amended at 56 FR 9415, Mar. 6, 1991; 81 FR 95484, Dec. 28, 2016]

§ 147.902 Acquifer exemptions.

(a) This section identifies any aquifers or their portions exempted in accordance with §§ 144.7(b) and 146.4 of this chapter. These aquifers are not being proposed for exemption under the Commonwealth of Kentucky's primacy approval. Rather, the exempted aquifers listed below were previously approved while EPA had primary enforcement authority for the Class II UIC program in the Commonwealth of Kentucky and are included here for reference. Additional information pertinent to these exempted aquifers or their portions resides in EPA Region 4.

(1) The following eight aquifers (underground sources of drinking water) in the Commonwealth of Kentucky have been exempted in accordance with the provisions of §§ 144.7(b) and 146.4 of this chapter for Class II injection activities only: A portion of the Tar Springs sandstone formation that has a quarter mile radius areal extent (125.6 acres) that is located at latitude 37.7261 and longitude −86.6914. The formation has a true vertical depth from surface of 280 feet.

(2) A portion of the Tar Springs sandstone formation that has a quarter mile radius areal extent (125.6 acres) that is located at latitude 37.7294 and longitude −867212. The formation has a true vertical depth from surface of 249 feet.

(3) A portion of the Tar Springs sandstone formation that has a quarter mile radius areal extent (125.6 acres) that is located at latitude 37.7055 and longitude −86.7177. The formation has

a true vertical depth from surface of 210 feet.

(4) A portion of the Pennsylvanian Age sandstone formation that has a quarter mile radius areal extent (125.6 acres) that is located at latitude 37.5402 and longitude −87.2551. The formation has a true vertical depth from surface of 1,050 feet.

(5) A portion of the Tar Springs sandstone formation that has a quarter mile radius areal extent (125.6 acres) that is located at latitude 37.7301 and longitude −87.6922. The formation has a true vertical depth from surface of 240 feet.

(6) A portion of the Caseyville sandstone formation that has a quarter mile radius areal extent (125.6 acres) that is located at latitude 37.5776 and longitude −87.1321. The formation had a true vertical depth from surface of 350 feet.

(7) A portion of the Caseyville sandstone formation that has a quarter mile radius areal extent (125.6 acres) that is located at latitude 37.5778 and longitude −87.1379. The formation has a true vertical depth from surface of 1,080 feet.

(8) A portion of the Caseyville sandstone formation that has a quarter mile radius areal extent (125.6 acres) that is located at latitude 37.5652 and longitude −87.1222. The formation has a true vertical depth from surface of 1,060 feet.

(b) [Reserved]

[81 FR 95484, Dec. 28, 2016]

§ 147.903 Existing Class I and III wells authorized by rule.

Maximum injection pressure. The owner or operator shall limit injection pressure to the lesser of:

(a) A value which will not exceed the operating requirements of § 144.28(f)(3)(i) or (ii) as applicable or;

(b) A value for well head pressure calculated by using the following formula:

$$Pm = (0.733–0.433\ Sg)d$$

where:

Pm = injection pressure at the well head in pounds per square inch

Sg = specific gravity of inject fluid (unitless)

d = injection depth in feet.

§ 147.904 [Reserved]

§ 147.905 Requirements for all wells—area of review.

Notwithstanding the alternatives presented in § 146.6 of this chapter, the area of review shall be a minimum fixed radius as described in § 146.6(b) of this chapter.

Subpart T—Louisiana

§ 147.950 State-administered program.

The UIC program for Class I, II, III, IV, and V wells in the State of Louisiana, except those wells on Indian lands, is the program administered by the Louisiana Department of Natural Resources approved by EPA pursuant to sections 1422 and 1425 of the SDWA. Notice of this approval was published in the FEDERAL REGISTER on April 23, 1982 (47 FR 17487); the effective date of this program is March 23, 1982. This program consists of the following elements, as submitted to EPA in the State's program application:

(a) *Incorporation by reference.* The requirements set forth in the State statutes and regulations cited in this paragraph are hereby incorporated by reference and made a part of the applicable UIC program under the SDWA for the State of Louisiana. This incorporation by reference was approved by the Director of the Federal Register on June 25, 1984.

(1) Louisiana Revised Statutes Annotated sections 30:1–30:24 (1975 and Supp. 1982);

(2) Underground Injection Control Program Regulations for Class I, III, IV, and V wells, Statewide Order No. 29–N–1 (February 20, 1982), as amended June 1, 1985 and January 20, 1986;

(3)(i) Statewide Order Governing the Drilling for and Producing of Oil and Gas in the State of Louisiana, Statewide Order No. 29–B (August 26, 1974) (Composite Order Incorporating Amendments through March 1, 1974);

(ii) Amendments to Statewide Order No. 29–B (Off-site Disposal of Drilling Mud and Salt Water Generated from Drilling and Production of Oil and Gas Wells) (effective July 20, 1980);

(iii) Amendment to Statewide Order No. 29–B (Amendment concerning the

use of Tables 5A and 6A, etc.) (December 15, 1980, effective January 1, 1981);

(iv) Amendment to Statewide Order No. 29–B (Amendment concerning the underground injection control of saltwater disposal wells, enhanced recovery injection wells, and liquid hydrocarbon storage wells) (effective February 20, 1982);

(v) Amendment to Statewide Order No. 29–B (Amendment concerning the offsite disposal of drilling mud and saltwater) (effective May 20, 1983);

(vi) Amendment to Statewide Order No. 29–B (Amendment concerning disposal of nonhazardous oilfield waste) (March 20, 1984, effective May 20, 1984);

(vii) Amendment to Statewide Order No. 29–B (Amendment concerning the administrative approval of injectivity tests and pilot projects in order to determine the feasibility of proposed enhanced recovery projects) (June 20, 1985, effective July 1, 1985).

(4) (i) Statewide Order adopting rules and regulations pertaining to the use of salt dome cavities (*i.e.*, storage chambers) for storage of liquid and/or gaseous hydrocarbons, etc., Statewide Order No. 29–M (July 6, 1977, effective July 20, 1977);

(ii) Supplement to Statewide Order No. 29–M (October 2, 1978);

(iii) Second Supplement to Statewide Order No. 29–M (June 8, 1979).

(b)(1) The Memorandum of Agreement (Class I, III, IV, and V wells) between EPA Region VI and the Louisiana Department of Natural Resources, Office of Conservation, signed by the EPA Regional Administrator on March 17, 1982 and amended by Addendum 1 and Addendum 2 on November 3, 1989;

(2) The Memorandum of Agreement (Class II wells) between EPA Region VI and the Louisiana Department of Natural Resources, Office of Conservation, signed by the EPA Regional Administrator on March 17, 1982.

(c) *Statement of legal authority*. (1) Letter from Attorney General of Louisiana to EPA, ''Re: Louisiana Underground Injection Control Program Authorization for State of Louisiana'' (Class I, III, IV and V Wells), January 13, 1982, (10 pages);

(2) Letter from Attorney General of Louisiana to EPA, ''Re: Louisiana Underground Injection Control Program Authorization for State of Louisiana'' (Class II Wells), January 13, 1982 (5 pages).

(3) Letter from Attorney General of Louisiana to EPA, ''Re: Class I Hazardous Waste Injection Well Regulatory Program; Attorney General's Statement, October 9, 1989 (9 pages);

(d) The Program Description and any other materials submitted as part of the application or as supplements thereto.

[49 FR 20197, May 11, 1984, as amended at 56 FR 9415, Mar. 6, 1991]

§ 147.951 EPA-administered program—Indian lands.

(a) *Contents*. The UIC program for all classes of wells on Indian lands in the State of Louisiana is administered by EPA. This program consists of the UIC program requirements of 40 CFR parts 124, 144, 146, 148, and any additional requirements set forth in the remainder of this subpart. Injection well owners and operators, and EPA shall comply with these requirements.

(b) *Effective dates*. The effective date of the UIC program for Indian lands in Louisiana is November 25, 1988.

[53 FR 43087, Oct. 25, 1988, as amended at 56 FR 9415, Mar. 6, 1991]

Subpart U—Maine

§ 147.1000 State-administered program.

The UIC program for all classes of wells in the State of Maine, except those on Indian lands, is the program administered by the Maine Department of Environmental Protection approved by EPA pursuant to section 1422 of the SDWA. Notice of this approval was published in the FEDERAL REGISTER on August 25, 1983 (48 FR 38641); the effective date of this program is September 26, 1983. This program consists of the following elements, as submitted to EPA in the State's program application.

(a) *Incorporation by reference*. The requirements set forth in the State statutes and regulations cited in this paragraph are hereby incorporated by reference and made part of the applicable UIC program under the SDWA for the

State of Maine. This incorporation by reference was approved by the Director of the OFR on June 25, 1984.

(1) Maine Revised Statutes Annotated title 38, sections 361–A, 363–B, 413, 414, 414–A, 420, and 1317–A (1978);

(2) Rules to Control the Subsurface Discharge of Pollutants by Well Injection, Rules of the Department of Environmental Protection, Chapter 543 (adopted June 22, 1983, effective July 4, 1983).

(b) The Memorandum of Agreement between EPA Region I and the Maine Department of Environmental Protection, signed by the EPA Regional Administrator on May 16, 1983.

(c) *Statement of legal authority*. Letter from Attorney General of Maine to EPA Regional Administrator, ''Re: Attorney General's Statement: Maine Underground Injection Control Program Primacy Application,'' June 30, 1983.

(d) The Program Description and any other materials submitted as part of the application or as supplements thereto.

[49 FR 20197, May 11, 1984, as amended at 53 FR 43088, Oct. 25, 1988; 56 FR 9415, Mar. 6, 1991]

§ 147.1001 EPA-administered program—Indian lands.

(a) *Contents*. The UIC program for all classes of wells on Indian lands in the State of Maine is administered by EPA. This program consists of the UIC program requirements of 40 CFR parts 124, 144, 146, 148, and any additional requirements set forth in the remainder of this subpart. Injection well owners and operators and EPA shall comply with these requirements.

(b) *Effective dates*. The effective date of the UIC program for Indian lands in Maine is November 25, 1988.

[53 FR 43088, Oct. 25, 1988, as amended at 56 FR 9416, Mar. 6, 1991]

Subpart V—Maryland

§ 147.1050 State-administered program—Class I, II, III, IV, and V wells.

The UIC program for Class I, II, III, IV, and V wells in the State of Maryland, except those wells on Indian lands, is the program administered by the Maryland Department of the Environment approved by EPA pursuant to section 1422 of the SDWA. Notice of this approval was published in the FR on April 19, 1984 (49 FR 15553); the effective date of this program is June 4, 1984. This program consists of the following elements, as submitted to EPA in the State's program application:

(a) *Incorporation by reference*. The requirements set forth in the State statutes and regulations cited in this paragraph are hereby incorporated by reference and made a part of the applicable UIC program under the SDWA for the State of Maryland. This incorporation by reference was approved by the Director of the OFR in accordance with 5 U.S.C. 552(a) and 1 CFR part 51. Copies may be obtained at the Maryland Department of the Environment, 2500 Broening Highway, Baltimore, Maryland, 21224. Copies may be inspected at the Environmental Protection Agency, Region III, 841 Chestnut Street, Philadelphia, Pennsylvania, 19107, or at the National Archives and Records Administration (NARA). For information on the availability of this material at NARA, call 202–741–6030, or go to: *http://www.archives.gov/federal_register/code_of_federal_regulations/ibr_locations.html*.

(1) Code of Maryland Regulations, Title 26, Subtitle 08, Chapter 07 promulgated and effective as of March 1, 1989;

(2) Code of Maryland Regulations, Title 26, Subtitle 08, Chapter 01, promulgated and effective as of March 1, 1989;

(3) Code of Maryland Regulations, Title 26, Subtitle 08, Chapter 02, promulgated and effective as of March 1, 1989;

(4) Code of Maryland Regulations, Title 26, Subtitle 08, Chapter 03, promulgated and effective as of March 1, 1989;

(5) Code of Maryland Regulations, Title 26, Subtitle 08, Chapter 04, promulgated and effective as of March 1, 1989;

(6) Code of Maryland Regulations, Title 26, Subtitle 13, Chapter 05, section .19, promulgated and effective as of August 1, 1989;

(7) Code of Maryland Regulations, Title 26, Subtitle 01, Chapter 02, promulgated and effective as of March 1, 1989;

(8) Code of Maryland Regulations, Title 26, Subtitle 01, Chapter 04, promulgated and effective as of March 1, 1989.

(b) *Memorandum of Agreement*. The Memorandum of Agreement between EPA Region III and the Maryland Department of the Environment, as submitted on August 2, 1983, and revised on February 16, 1984.

(c) *Statement of legal authority*. Statement from the Maryland Attorney General on the Underground Injection Control Program, as submitted on August 2, 1983, and revised on February 16, 1984.

(d) *Program Description*. The Program Description and other materials submitted as part of the application or as supplements thereto.

[56 FR 9416, Mar. 6, 1991]

§§ 147.1051–147.1052 [Reserved]

§ 147.1053 EPA-administered program—Indian lands.

(a) *Contents*. The UIC program for all classes of wells on Indian lands in the State of Maryland is administered by EPA. This program consists of the UIC program requirements of 40 CFR parts 124, 144, 146, 148, and any additional requirements set forth in the remainder of this subpart. Injection well owners and operators, and EPA shall comply with these requirements.

(b) *Effective date*. The effective date of the UIC program for Indian lands in Maryland is November 25, 1988.

[53 FR 43088, Oct. 25, 1988, as amended at 56 FR 9416, Mar. 6, 1991]

§§ 147.1054–147.1099 [Reserved]

Subpart W—Massachusetts

§ 147.1100 State-administered program.

The UIC program for all classes of wells in the State of Massachusetts, except those on Indian lands, is the program administered by the Massachusetts Department of Environmental Protection, approved by EPA pursuant to section 1422 of the SDWA. Notice of this approval was published in the FEDERAL REGISTER on November 23, 1982 (47 FR 52705); the effective date of this program is December 23, 1982. This program consists of the following elements, as submitted to EPA in the State's program application:

(a) *Incorporation by reference*. The requirements set forth in the State statutes and regulations cited in this paragraph are hereby incorporated by reference and made a part of the applicable UIC program under the SDWA for the State of Massachusetts. This incorporation by reference was approved by the Director of the Federal Register on June 25, 1984.

(1) Massachusetts General Laws Annotated chapter 21, sections 27, 43, and 44 (West 1981);

(2) Code of Massachusetts Regulations, title 310, sections 23.01–23.11 as amended April 26, 1982.

(b) The Memorandum of Agreement between EPA Region I and the Massachusetts Department of Environmental Quality Engineering, signed by the EPA Regional Administrator on August 18, 1982.

(c) *Statement of legal authority*. ''Underground Injection Control Program—Attorney General's Statement for Class I, II, III, IV and V Injection Wells,'' signed by Assistant Attorney General for Attorney General of Massachusetts, May 13, 1982.

(d) The Program Description and any other materials submitted as part of the application or as supplements thereto.

[49 FR 20197, May 11, 1984, as amended at 53 FR 43088, Oct. 25, 1988]

§ 147.1101 EPA-administered program—Indian lands.

(a) *Contents*. The UIC program for all classes of wells on Indian lands in the State of Massachusetts is administered by EPA. This program consists of the UIC program requirements of 40 CFR parts 124, 144, 146, 148, and any additional requirements set forth in the remainder of this subpart. Injection well owners and operators, and EPA shall comply with these requirements.

(b) *Effective date*. The effective date of the UIC program for Indian lands in Massachusetts is November 25, 1988.

[53 FR 43088, Oct. 25, 1988, as amended at 56 FR 9416, Mar. 6, 1991]

Subpart X—Michigan

§ 147.1150 State-administered program. [Reserved]

§ 147.1151 EPA-administered program.

(a) *Contents*. The UIC program for the State of Michigan, including all Indian lands, is administered by EPA. This program consists of the UIC program requirements of 40 CFR parts 124, 144, 146, 148, and any additional requirements set forth in the remainder of this subpart. Injection well owners and operators, and EPA shall comply with these requirements.

(b) *Effective dates*. The effective date for the UIC program for all lands in Michigan, including Indian lands, is June 25, 1984.

[52 FR 17681, May 11, 1987, as amended at 56 FR 9416, Mar. 6, 1991]

§ 147.1152 Aquifer exemptions. [Reserved]

§ 147.1153 Existing Class I, II (except enhanced recovery and hydrocarbon storage) and III wells authorized by rule.

Maximum injection pressure. The owner or operator shall limit injection pressure to the lesser of:

(a) A value which will not exceed the operating requirements of § 144.28(f)(3)(i) or (ii) as applicable; or

(b) A value for well head pressure calculated by using the following formula:

$$Pm = (0.800 - 0.433\ Sg)d$$

where:

Pm = injection pressure at the well head in pounds per square inch

Sg = specific gravity of injected fluid (unitless)

d = injection depth in feet.

§ 147.1154 Existing Class II enhanced recovery and hydrocarbon storage wells authorized by rule.

(a) *Maximum injection pressure*. (1) To meet the operating requirements of § 144.28(f)(3)(ii) (A) and (B) of this chapter, the owner or operator:

(i) Shall use an injection pressure no greater than the pressure established by the Regional Administrator for the field or formation in which the well is located. The Regional Administrator shall establish such a maximum pressure after notice, opportunity for comment, and opportunity for a public hearing, according to the provisions of part 124, subpart A of this chapter, and will inform owners and operators in writing of the applicable maximum pressure; or

(ii) May inject at pressures greater than those specified in paragraph (a)(1)(i) of this section for the field or formation in which he is operating provided he submits a request in writing to the Regional Administrator, and demonstrates to the satisfaction of the Regonal Administrator that such injection pressure will not violate the requirement of § 144.28(f)(3)(ii) (A) and (B). The Regional Administrator may grant such a request after notice, opportunity for comment, and opportunity for a public hearing, according to the provisions of part 124, subpart A of this chapter.

(2) Prior to such time as the Regional Administrator establishes field rules for maximum injection pressure based on data provided pursuant to paragraph (a)(2)(ii) of this section the owner or operator shall:

(i) Limit injection pressure to a value which will not exceed the operating requirements of § 144.28(f)(3)(ii); and

(ii) Submit data acceptable to the Regional Administrator which defines the fracture pressure of the formation in which injection is taking place. A single test may be submitted on behalf of two or more operators conducting operations in the same formation, if the Regional Administrator approves such submission. The data shall be submitted to the Regional Administrator within 1 year following the effective date of this program.

(b) *Casing and cementing*. Where the Regional Administrator determines that the owner or operator of an existing enhanced recovery or hydrocarbon storage will may not be in compliance with the requirements of §§ 144.28(e) and 146.22, the owner or operator shall comply with paragraphs (b) (1) through (4)

of this section, when required by the regional Administrator:

(1) Protect USDWs by:

(i) Cementing surface casing by recirculating the cement to the surface from a point 50 feet below the lowermost USDW; or

(ii) Isolating all USDWs by placing cement between the outermost casing and the well bore; and

(2) Isolate any injection zones by placing sufficient cement to fill the calculated space between the casing and the well bore to a point 250 feet above the injection zone; and

(3) Use cement:

(i) Of sufficient quantity and quality to withstand the maximum operating pressure;

(ii) Which is resistant to deterioration from formation and injection fluids; and

(iii) In a quantity no less than 120% of the calculated volume necessary to cement off a zone.

(4) The Regional Administrator may specify other requirements in addition to or in lieu of the requirements set forth in paragraphs (b) (1) through (3) of this section, as needed to protect USDWs.

§ 147.1155 Requirements for all wells.

(a) *Area of review*. Notwithstanding the alternatives presented in § 146.6 of this chapter, the area of review for Class II wells shall be a fixed radius as described in § 146.6(b) of this chapter.

(b) *Tubing and packer*. The owner or operator of an injection well injecting salt water for disposal shall inject through tubing and packer. The owner of an existing well must comply with this requirement within one year of the effective date of this program.

Subpart Y—Minnesota

§ 147.1200 State-administered program. [Reserved]

§ 147.1201 EPA-administered program.

(a) *Contents*. The UIC program for the State of Minnesota is administered by EPA. This program consists of the UIC program requirements of 40 CFR parts 124, 144, 146, 148, and any additional requirements set forth in the remainder of this subpart. Injection well owners and operators, and EPA shall comply with these requirements.

(b) *Effective date*. The effective date of the UIC program for Minnesota is: June 11, 1984.

[49 FR 20197, May 11, 1984, as amended at 56 FR 9416, Mar. 6, 1991]

§ 147.1202 Aquifer exemptions. [Reserved]

§ 147.1210 Requirements for Indian lands.

(a) *Purpose and scope*. This section sets forth additional requirements that apply to injection activities on Indian lands in Minnesota.

(b) *Requirements*. Notwithstanding the other requirements of this subpart, for Indian lands described in paragraph (a) of this section, no owner or operator shall construct, operate, maintain, or convert any Class I, II, III, or IV well. The UIC program for Class V wells on such Indian Lands is administered by EPA, and consists of the applicable requirements of 40 CFR parts 124, 144, and 146. In addition, no owner or operator shall abandon a well without the approval of the Regional Administrator.

(c) *Effective date*. The effective date of the UIC program requirements for Indian lands in Minnesota is December 30, 1984.

[49 FR 45307, Nov. 15, 1984]

Subpart Z—Mississippi

§ 147.1250 State-administered program—Class I, III, IV, and V wells.

The UIC program for Class I, III, IV and V wells in the State of Mississippi, except those on Indian lands, is the program administered by the Mississippi Department of Natural Resources approved by EPA pursuant to section 1422 of the SDWA. Notice of this approval was published in the FEDERAL REGISTER on August 25, 1983 (48 FR 38641); the effective date of this program is September 26, 1983. This program consists of the following elements, as submitted to EPA in the State's program application:

(a) *Incorporation by reference.* The requirements set forth in the State statutes and regulations cited in this paragraph are hereby incorporated by reference and made a part of the applicable UIC program under the SDWA for the State of Mississippi. This incorporation by reference was approved by the Director of the Federal Register on June 25, 1984.

(1) Mississippi Air and Water Pollution Control Law, Mississippi Code Annotated sections 49–17–1 through 49–17–29 (1972) and Supp. 1983);

(2) Mississippi Department of Natural Resources, Bureau of Pollution Control, Underground Injection Control Program Regulations (adopted February 11, 1982);

(3) Mississippi Department of Natural Resources, Bureau of Pollution Control, State of Mississippi Wastewater Permit Regulations for National Pollutant Discharge Elimination System (NPDES), Underground Injection Control (UIC), and State Operating Permits (adopted May 1, 1974; amended February 11, 1982).

(b) The Memorandum of Agreement between EPA Region IV and the Mississippi Department of Natural Resources, signed by the EPA Regional Administrator on February 8, 1983.

(c) *Statement of legal authority.* (1) Letter from Attorney General of Mississippi (by Special Assistant Attorney General) to Executive Director, Mississippi Department of Natural Resources, ''Re: Mississippi Department of Natural Resources, Bureau of Pollution Control, State Underground Injection Control (UIC) Program; Statement of the Attorney General of the State of Mississippi,'' December 3, 1981;

(2) Letter from Attorney General of Mississippi (by Special Assistant Attorney General) to Executive Director, Mississippi Department of Natural Resources, ''Re: Authority to Regulate and Take Samples from Underground Injection Systems,'' October 18, 1982;

(3) Letter from Attorney General of Mississippi (by Special Assistant Attorney General) to Regional Administrator, EPA Region IV, ''Re: Public Participation in State Enforcement Actions, UIC Program,'' June 10, 1983.

(d) The Program Description and any other materials submitted as part of the application or supplements thereto.

[49 FR 20197, May 11, 1984, as amended at 53 FR 43088, Oct. 25, 1988]

§ 147.1251 State-administered program—Class II wells.

The UIC program for Class II wells in the State of Mississippi, other than those on Indian lands, is the program administered by the State Oil and Gas Board of Mississippi approved by EPA pursuant to section 1425 of the SDWA. Notice of this approval was published in the FEDERAL REGISTER on March 2, 1989; the effective date of this program is March 2, 1989. This program consists of the following elements, as submitted to EPA in the State's program application:

(a) Incorporation by reference. The requirements set forth in the State statutes and regulations cited in this paragraph are hereby incorporated by reference and made a part of the applicable UIC program under the SDWA for the State of Mississippi. This incorporation by reference was approved by the Director of the Federal Register in accordance with 5 U.S.C. 552(a).

(1) Mississippi Code Annotated, section 5–9–9 (Supp. 1988).

(2) Mississippi Code Annotated, sections 53–1–1 through 53–1–47, inclusive and sections 53–1–71 through 53–1–77, inclusive (1972 and Supp. 1988).

(3) Mississippi Code Annotated, sections 53–3–1 through 53–3–165, inclusive (1972 and Supp. 1988).

(4) State Oil and Gas Board Statewide Rules and Regulations, Rules 1 through 65, inclusive (Aug. 1, 1987, as amended, Sept. 17, 1987).

(b) The Memorandum of Agreement between EPA Region IV and the State Oil and Gas Board of Mississippi signed by the Regional Administrator on October 31, 1988.

(c) Statement of legal authority. Statement from the Attorney General signed on October 1, 1987 with amendments to the Statement signed August 5, 1988 and September 15, 1988 by the Special Assistant Attorney General.

(d) The Program Description and any other materials submitted as part of

the original application or as supplements thereto.

[54 FR 8735, Mar. 2, 1989]

§ 147.1252 EPA-administered program—Indian lands.

(a) *Contents.* The UIC program for all classes of wells on Indian lands in the State of Mississippi is administered by EPA. This program consists of the UIC program requirements of 40 CFR parts 124, 144, 146, 148, and any additional requirements set forth in the remainder of this subpart. Injection well owners and operators, and EPA shall comply with these requirements.

(b) *Effective date.* The effective date of the UIC program on Indian lands is November 25, 1988.

[53 FR 8735, Mar. 2, 1989, as amended at 56 FR 9416, Mar. 6, 1991]

Subpart AA—Missouri

§ 147.1300 State-administered program.

The UIC program for all classes of wells in the State of Missouri, except those on Indian lands, is administered by the Missouri Department of Natural Resources, approved by EPA pursuant to section 1422 and 1425 of the SDWA. Notice of this approval was published in the FEDERAL REGISTER on December 2, 1983 (48 FR 54349); the effective date of this program is December 2, 1983). This program consists of the following elements, as submitted to EPA in the State's program application.

(a) *Incorporation by reference.* The requirements set forth in the State statutes and regulations cited in this paragraph are hereby incorporated by reference and made a part of the applicable UIC program under the SDWA for the State of Missouri. This incorporation by reference was approved by the Director of the Federal Register on June 25, 1984.

(1) Vernon's Annotated Missouri Statutes sections 259.010 to 259.240 (Supp. 1984);

(2) Missouri Code of State Regulations, title 10, division 50, chapters 1 and 2 (June 1984);

(3) Vernon's Annotated Missouri Statutes chapter 204, §§ 204.006 through 204.470 (1983 and Cumm. Supp. 1990).

(b) The Memorandum of Agreement between EPA Region VII and the Missouri Department of Oil and Gas, signed by the EPA Regional Administrator on December 3, 1982.

(c) *Statement of legal authority.* (1) Opinion Letter No. 63 and attached Memorandum Opinion, signed by Attorney General of Missouri, March 16, 1982;

(2) Addendum to Opinion Letter No. 63 (1982), signed by Attorney General of Missouri, October 28, 1982.

(3) Opinion No. 127–83, signed by Attorney General of Missouri, July 11, 1983.

(d) The Program Description and any other materials submitted as part of the application or as supplements thereto.

[49 FR 20197, May 11, 1984, as amended at 53 FR 43088, Oct. 25, 1988; 56 FR 9416, Mar. 6, 1991]

§ 147.1301 State-administered program—Class I, III, IV, and V wells.

The UIC program for Class I, III, IV, and V wells in the State of Missouri, other than those on Indian lands, is the program administered by the Missouri Department of Natural Resources, approved by EPA pursuant to section 1422 of the SDWA. Notice of this approval was published in the FEDERAL REGISTER on November 2, 1984; the effective date of this program is July 31, 1985. This program consists of the following elements, as submitted to EPA in the State's program application.

(a) *Incorporation by reference.* The requirements set forth in the State statutes and regulations cited in this paragraph are hereby incorporated by reference and made a part of the applicable UIC program under the SDWA for the State of Missouri. This incorporation by reference was approved by the Director of the Federal Register effective July 31, 1985.

(1) Revised Statutes of the State of Missouri, Volume 2, sections 204.016, 204.026, 204.051, 204.056 and Volume V, section 577.155 (1978 and Cumm. Supp. 1984);

(2) Missouri Code of State Regulations, title 10, division 20, Chapter 6, sections 20–6.010, 20–6.020, 20–6.070, 20–6.080, 20–6.090, and title 10, division 20,

Chapter 7, section 20–7.031 (1977, amended 1984).

(b) *Other laws*. The following statutes and regulations, although not incorporated by reference except for select sections identified in paragraph (a) of this section, are also part of the approved State-administered program.

(1) Revised Statutes of the State of Missouri, chapters 204, 260, 536, 557, 558 and 560; sections 640.130.1 and 1.020 (1978 and Cumm. Supp. 1984);

(2) Rule 52.12 Vernon's Annotated Missouri Rules (1978);

(3) Missouri Code of State Regulations, title 10, division 20, Chapters 1 through 7 (1977, amended 1984).

(c) The Memorandum of Agreement between EPA Region VII and the Missouri Department of Natural Resources, signed by the EPA Regional Administrator on October 10, 1984.

(d) *Statement of Legal Authority*. Opinion No. 123–84, signed by Attorney General of Missouri, September 24, 1984. Amended April 2, 1985.

(e) The Program Description and any other materials submitted as part of the application or as supplements thereto.

[50 FR 28942, July 17, 1985]

§ 147.1302 Aquifer exemptions. [Reserved]

§ 147.1303 EPA-administered program—Indian lands.

(a) *Contents*. The UIC program for all classes of wells on Indian lands in the State of Missouri is administered by EPA. This program consists of the UIC program requirements of 40 CFR parts 124, 144, 145, 146, 148, and any additional requirements set forth in the remainder of this subpart. Injection well owners and operators, and EPA shall comply with these requirements.

(b) *Effective date*. The effective date for the UIC program for Indian lands is November 25, 1988.

[53 FR 43088, Oct. 25, 1988, as amended at 56 FR 9417, Mar. 6, 1991]

Subpart BB—Montana

§ 147.1350 State-administered programs—Class II wells.

The UIC program for Class II injection wells in the State of Montana, except for those in Indian Country, is the program administered by the Montana Board of Oil and Gas Conservation (MBOGC) approved by the EPA pursuant to Section 1425 of the SDWA. Notice of this approval was published in the FEDERAL REGISTER on November 19, 1996; the effective date of this program is November 19, 1996. This program consists of the following elements as submitted to EPA in the State's program application:

(a) *Incorporation by reference*. The requirements set forth in the State statutes and regulations cited in this paragraph are hereby incorporated by reference and made part of the applicable UIC program under the SDWA for the State of Montana. This incorporation by reference was approved by the Director of the FR in accordance with 5 U.S.C. 552(a) and 1 CFR part 51. Copies may be obtained at the Montana Board of Oil and Gas Conservation, 2535 St. Johns Avenue, Billings, Montana, 59102. Copies may be inspected at the Environmental Protection Agency, Region VIII, 999 18th Street, Suite 500, Denver, Colorado, 80202–2466, or at the National Archives and Records Administration (NARA). For information on the availability of this material at NARA, call 202–741–6030, or go to: *http://www.archives.gov/federal_register/code_of_federal_regulations/ibr_locations.html*.

(1) Montana Statutory Requirements Applicable to the Underground Injection Control Program, August, 1996.

(2) Montana Regulatory Requirements Applicable to the Underground Injection Control Program, August, 1996.

(b) *Memorandum of Agreement (MOA)*. (1) The MOA between EPA Region VIII and the MBOGC signed by the Acting EPA Regional Administrator on June 9, 1996.

(2) Letter dated May 24, 1996, from the Administrator of the MBOGC and the attached addendum (Addendum No. 1–96) to the MOA between MBOGC and EPA Region VIII, signed by the Acting EPA Regional Administrator on August 14, 1996.

(c) *Statement of legal authority*. (1) Letter from the Montana Attorney General to the Regional Administrator dated August 1, 1995.

(2) MBOGC independent counsel's certification of Montana's UIC program for Class II wells dated July 24, 1995.

(3) Letter dated March 8, 1996, from MBOGC independent counsel to USEPA, Region VIII; ''Re: EPA comments of November 29, 1995, on Montana Class II primacy application.''

(4) Letter dated March 8, 1996, from the Administrator of the MBOGC and the attached proposed replacement language for the MOA; ''Re: Responses to EPA comments on Montana Class II Primacy Application.''

(d) *Program Description*. The Program Description and any other materials submitted as part of the application or as supplemented thereto:

(1) Application and accompanying materials for approval of Montana's UIC program for Class II wells submitted by the Governor of Montana, August 3, 1995.

(2) [Reserved]

[61 FR 58933, Nov. 19, 1996]

§ 147.1351 EPA-administered program.

(a) *Contents*. The UIC program in the State of Montana for Class I, III, IV, and V wells, and for all Classes of wells in Indian country in Montana, except for Class II wells on all lands within the exterior boundaries of the Fort Peck Indian Reservation, is administered by EPA. This program consists of the UIC program requirements of 40 CFR parts 124, 144, 146, 148, and any additional requirements set forth in the remainder of this subpart. Injection well owners and operators, and EPA shall comply with these requirements.

(b) *Effective dates*. The effective date for the UIC program for Class I, III, IV, and V wells for all lands in Montana, including all Indian country in Montana, and for Class II wells for all Indian country in Montana other than the Fort Peck Indian Reservation, is June 25, 1984. The effective date for the EPA-approved State-administered UIC Class II program for all lands in Montana, except for those in Indian country, is provided in § 147.1350.

[52 FR 17681, May 11, 1987, as amended at 56 FR 9417, Mar. 6, 1991; 61 FR 58933, Nov. 19, 1996; 73 FR 63646, Oct. 27, 2008]

§ 147.1352 Aquifer exemptions.

Those portions of aquifers within one-quarter mile of existing Class II wells are exempted for the purpose of Class II injection activities only.

NOTE: A complete listing of the exemptions and their location is available for review in the EPA Regional Office, 1860 Lincoln Street, Denver, Colorado. An updated list of exemptions will be maintained in the Regional Office.

§ 147.1353 Existing Class I, II (except enhanced recovery and hydrocarbon storage) and III wells authorized by rule.

Maximum injection pressure. The owner or operator shall limit injection pressure to the lesser of:

(a) A value which will not exceed the operating requirements of § 144.28(f)(3)(i) or (ii) as applicable or

(b) A value for well head pressure calculated by using the following formula:

$$Pm = (0.733 - 0.433\ Sg)d$$

where:

Pm = injection pressure at the well head in pounds per square inch

Sg = specific gravity of inject fluid (unitless)

d = injection depth in feet.

§ 147.1354 Existing Class II enhanced recovery and hydrocarbon storage wells authorized by rule.

(a) *Maximum injection pressure*. (1) To meet the operating requirements of § 144.28(f)(3)(ii) (A) and (B) of this chapter, the owner or operator:

(i) Shall use an injection pressure no greater than the pressure established by the Regional Administrator for the field or formation in which the well is located. The Regional Administrator shall establish such a maximum pressure after notice, opportunity for comment, and opportunity for a public hearing, according to the provisions of part 124, subpart A of this chapter, and will inform owners and operators in writing of the applicable maximum pressure; or

(ii) May inject at pressures greater than those specified in paragraph (a)(1)(i) of this section for the field or formation in which he is operating provided he submits a request in writing to the Regional Administrator, and demonstrates to the satisfaction of the

Regional Administrator that such injection pressure will not violate the requirement of §144.28(f)(3)(ii) (A) and (B). The Regional Administrator may grant such a request after notice, opportunity for comment, and opportunity for a public hearing, according to the provisions of part 124, subpart A of this chapter.

(2) Prior to such time as the Regional Administrator established rules for maximum injection pressure based on data provided pursuant to paragraph (ii) below the owner or operator shall:

(i) Limit injection pressure to a value which will not exceed the operating requirements of §144.28(f)(3)(ii); and

(ii) Submit data acceptable to the Regional Administrator which defines the fracture pressure of the formation in which injection is taking place. A single test may be submitted on behalf of two or more operators conducting operations in the same formation, if the Regional Administrator approves such submission. The data shall be submitted to the Regional Administrator within 1 year of the effective date of this program.

(b) *Casing and cementing*. Where the Regional Administrator determines that the owner or operator of an existing enhanced recovery or hydrocarbon storage well may not be in compliance with the requirements of §§144.28(e) and 146.22, the owner or operator shall when required by the Regional Administrator:

(1) Isolate all USDWs by placing cement between the outermost casing and the well bore as follows:

(i) If the injection well is east of the 108th meridian, cement the outermost casing from a point 50 feet into a major shale formation underlying the uppermost USDW to the surface. For the purpose of this paragraph, major shale formations are defined as the Bearpaw, Clagget, and Colorado formations.

(ii) If the injection well is west of the 108th meridian, cement the outermost casing to a depth of 1,000 feet, or to the base of the lowermost USDW in use as a source of drinking water whichever is deeper. The Regional Administrator may allow an owner or operator to cement to a lesser depth if he can demonstrate to the satisfaction of the Regional Administrator that no USDW will be affected by the injection facilities.

(2) Isolate any injection zones by placing sufficient cement to fill the calculated space between the casing and the well bore to a point 250 feet above the injection zone; and

(3) Use cement:

(i) Of sufficient quantity and quality to withstand the maximum operating pressure;

(ii) Which is resistant to deteriortion from formation and injection fluids; and

(iii) In a quantity no less than 120% of the calculated volume necessary to cement off a zone.

(4) The Regional Administrator may specify other requirements in addition to or in lieu of the requirements set forth in paragraphs (b) (1) through (3) of this section, as needed to protect USDWs.

§147.1355 Requirements for all wells.

(a) *Area of review*. Notwithstanding the alternatives presented in §146.6 of this chapter, the area of review shall be a fixed radius as described in §146.06(b) of this chapter.

(b) The applicant must give separate notice of intent to apply for a permit to each owner or tenant of the land within one-quarter mile of the site. This requirement may be waived by the Regional Administrator where individual notice to all land owners and tenants would be impractical. The addresses of those to whom notice is given, and a description of how notice was given, shall be submitted with the permit application. The notice shall include:

(1) Name and address of applicant;

(2) A brief description of the planned injection activities, including well location, name and depth of the injection zone, maximum injection pressure and volume, and fluid to be injected;

(3) EPA contact person; and

(4) A statement that opportunity to comment will be announced after EPA prepares a draft permit.

(c) Owners and operators on or within one-half mile of Indian lands shall provide notice as specified in paragraph

(b) of this section, except that such notice shall be provided within a one-half mile radius of the site.

APPENDIX A TO SUBPART BB OF PART 147—STATE REQUIREMENTS INCORPORATED BY REFERENCE IN SUBPART BB OF PART 147 OF THE CODE OF FEDERAL REGULATIONS

The following is an informational listing of state requirements incorporated by reference in Subpart BB of part 147 of the Code of Federal Regulations:

Subpart BB—Montana

(a) The statutory provisions include:

(1) Montana Code annotated, 1995, Title 2, Chapter 15:

Section 2–15–121. Allocation for administrative purposes only.
Section 2–15–124. Quasi-judicial boards.
Section 2–15–3303. Board of oil and gas conservation-composition—allocation—quasi-judicial.

(2) Montana Code annotated, 1995, Title 82, Chapter 10:

Section 82–10–101. Action for accounting for royalty.
Section 82–10–102. Remedy not exclusive.
Section 82–10–103. Obligation to pay royalties as essence of contract-interest.
Section 82–10–104. Payment of royalties-form of record required.
Section 82–10–105 through 82–10–109 reserved.
Section 82–10–110. Division order-definition-effect.
Section 82–10–201. Authorization for lease and terms-land not subject to leasing.
Section 82–10–202. Acreage pooling.
Section 82–10–203. Interference with normal use of land prohibited.
Section 82–10–204. Lease of acquired oil and gas interests.
Section 82–10–301. Definitions.
Section 82–10–302. Policy.
Section 82–10–303. Use of eminent domain to acquire underground reservoirs.
Section 82–10–304. Certificate of board required prior to use of eminent domain.
Section 82–10–305. Proceedings.
Section 82–10–401. Notice required before abandonment of well-owner's option.
Section 82–10–402. Inventory of abandoned wells and seismic operations-reclamation procedures.
Section 82–10–501. Purpose-legislative findings.
Section 82–10–502. Definitions.
Section 82–10–503. Notice of drilling operations.
Section 82–10–504. Surface damage and disruption payments-penalty for late payment.
Section 82–10–505. Liability for damages to property.
Section 82–10–506. Notification of injury.
Section 82–10–0507. Agreement—offer of settlement.
Section 82–10–508. Rejection—legal action.
Section 82–10–509 and 82–10–510. Reserved.
Section 82–10–511. Remedies cumulative.

(3) Montana Code annotated, 1995, Title 82, Chapter 11:

Section 82–11–101. Definitions.
Section 82–11–102. Oil or gas wells not public utilities.
Section 82–11–103. Lands subject to law.
Section 82–11–104. Construction-no conflict with board of land commissioners' authority.
Section 82–11–105 through 82–11–110 reserved.
Section 82–11–111. Powers and duties of board.
Section 82–11–112. Intergovernmental cooperation.
Section 82–11–113. Role of board in implementation of national gas policy.
Section 82–11–114. Appointment of examiners.
Section 82–11–115. Procedure to make determinations.
Section 82–11–116. Public access.
Section 82–11–117. Confidentiality of records.
Section 82–11–118. Fees for processing applications.
Section 82–11–119 through 82–11–120 reserved.
Section 82–11–121. Oil and gas waste prohibited.
Section 82–11–122. Notice of intention to drill or conduct seismic operations-notice to surface owner.
Section 82–11–123. Requirements for oil and gas operations.
Section 82–11–124. Requirement relating to waste prevention.
Section 82–11–125. Availability of cores or chips, cuttings, and bottom-hole temperatures to board.
Section 82–11–126. Availability of facilities to bureau of mines.
Section 82–11–127. Prohibited activity.
Section 82–11–128 through 82–11–130 reserved.
Section 82–11–131. Privilege and license tax.
Section 82–11–132. Statements to treasurer and payment of tax.
Section 82–11–133. Penalty for late payment.
Section 82–11–134. Permit fees.
Section 82–11–135. Money earmarked for board expenses.
Section 82–11–136. Expenditure of funds from bonds for plugging wells.
Section 82–11–137. Class II injection well operating fee.
Section 82–11–138 through 82–11–140 reserved.
Section 82–11–141. Administrative procedure.
Section 82–11–142. Subpoena power-civil actions.
Section 82–11–143. Rehearing.
Section 82–11–144. Court review.
Section 82–11–145. Injunction or restraining order.
Section 82–11–146. Appeal.
Section 82–11–147. Violations.

Section 82–11–148. Criminal penalties.
Section 82–11–149. Civil penalties.
Section 82–11–150. Legal assistance.
Section 82–11–151. Emergencies-notice and hearing.
Section 82–11–152 through 82–11–160 reserved.
Section 82–11–161. Oil and gas production damage mitigation account-statutory appropriation.
Section 82–11–162. Release of producing oil or gas well from drilling bond-fee.
Section 82–11–163. Landowner's bond on noncommercial well.
Section 82–11–164. Lien created.
Section 82–11–165 through 82–11–170 reserved.
Section 82–11–171. Terminated.
Section 82–11–201. Establishment of well spacing units.
Section 82–11–202. Pooling of interest within spacing unit.
Section 82–11–203. Pooling agreements not in violation of antitrust laws.
Section 82–11–204. Hearing on operation of pool as unit.
Section 82–11–205. Board order for unit operation-criteria.
Section 82–11–206. Terms and conditions of plan for unit operations.
Section 82–11–207. Approval of plan for unit operations by persons paying costs.
Section 82–11–208. Board orders-amendment.
Section 82–11–209. Units established by previous order.
Section 82–11–210. Unit operations-less than whole of pool.
Section 82–11–211. Operations considered as done by all owners in unit.
Section 82–11–212. Property rights and operator's lien.
Section 82–11–213. Contract not terminated by board order.
Section 82–11–214. Title to oil and gas rights not affected by board order.
Section 82–11–215. Unit operation not restraint of trade.
Section 82–11–216. No creation of relationship between parties in unit.
Section 82–11–301. Authorization to join interstate compact for conservation of oil and gas.
Section 82–11–302. Interstate oil and gas compact.
Section 82–11–303. Extension of expiration date.
Section 82–11–304. Governor as member of Interstate Oil Compact Commission.
Section 82–11–305. Limitation on power of representative.
Section 82–11–306. Expenses of representative.

(b) The regulatory provisions include: Administrative Rules of Montana Board of Oil and Gas Conservation, Chapter 22, revised March 1996:

Rule 36.22.101. Organizational Rule.
Rule 36.22.201. Procedural Rules.
Rule 36.22.202. Environmental Policy Act Procedural Rules.
Rule 36.22.301. Effective Scope of Rules.
Rule 36.22.302. Definitions.
Rule 36.22.303. Classification of Wildcat or Exploratory Wells.
Rule 36 22.304. Inspection of Record, Properties, and Wells.
Rule 36.22.305. Naming of Pools.
Rule 36.22.306. Organization of Reports.
Rule 36.22.307. Adoption of Forms.
Rule 36.22.308. Seal of Board.
Rule 36.22.309. Referral of Administrative Decisions.
Rule 36.22.401. Office and Duties of Petroleum Engineer.
Rule 36.22.402. Office and Duties of Administrator.
Rule 36.22.403. Office and Duties of Geologist.
Rule 36.22.501. Shot Location Limitations.
Rule 36.22.502. Plugging and Abandonment.
Rule 36.22.503. Notification.
Rule 36.22.504. Identification.
Rule 36.22.601. Notice of Intention and Permit to Drill.
Rule 36.22.602. Notice of Intention to Drill and Application for Permit to Drill.
Rule 36.22.603. Permit Fees.
Rule 36.22.604. Permit Issuance - Expiration - Extension.
Rule 36.22.605. Transfer of Permits.
Rule 36.22.606. Notice and Eligibility Statement for Drilling or Recompletion in Unit Operations.
Rule 36.22.607. Drilling Permits Pending Special Field Rules.
Rule 36.22.701. Spacing Units - General.
Rule 36.22.702. Spacing of Wells.
Rule 36.22.703. Horizontal Wells.
Rule 36.22.1001. Rotary Drilling Procedure.
Rule 36.22.1002. Cable Drilling Procedure.
Rule 36.22.1003. Vertical Drilling Required Deviation.
Rule 36.22.1004. Dual Completion of Wells.
Rule 36.22.1005. Drilling Waste Disposal and Surface Restoration.
Rules 36.22.1006 through 36.22.1010. Reserved.
Rule 36.22.1011. Well Completion and Recompletion Reports.
Rule 36.22.1012. Samples of Cores and Cuttings.
Rule 36.22.1013. Filing of Completion Reports, Well Logs, Analyses, Reports, and Surveys.
Rule 36.22.1014. Blowout Prevention and Well Control Equipment.
Rule 36.22.1101. Fire Hazard Prevention.
Rule 36.22.1102. Fire Walls Required.
Rule 36.22.1103. Notification and Report of Emergencies and Undesirable Incidents.
Rule 36.22.1104. Control and Cleanup.
Rule 36.22.1105. Solid Waste.
Rule 36.22.1201. Surface Equipment.
Rule 36.22.1202. Identification.
Rule 36.22.1203. Chokes Required.
Rule 36.22.1204. Separators Required.
Rule 36.22.1205. Vacuum Pumps Prohibited.
Rule 36.22.1206. Tubing Required.
Rule 36.22.1207. Earthen Pits and Open Vessels.

Rule 36.22.1208. Producing from Different Pools Through the Same Casing.
Rules 36.22.1209 through 36.22.1212. Reserved.
Rule 36.22.1213. Reservoir or Pool Surveys.
Rule 36.22.1214. Subsurface Pressure Tests.
Rule 36.22.1215. Stabilized Production Test.
Rule 36.22.1216. Gas Oil Ratio Tests.
Rule 36.22.1217. Water Production Report.
Rule 36.22.1218. Gas to be Metered.
Rule 36.22.1219. Gas Waste Prohibited.
Rule 36.22.1220. Associated Gas Flaring Limitation—Application to exceed—Board Review and Action.
Rule 36.22.1221. Burning of Waste Gas Required.
Rule 36.22.1222. Hydrogen Sulfide Gas.
Rule 36.22.1223. Fencing, Screening, and Netting of Pits.
Rules 36.22.1224 and 36.22.1425. Reserved.
Rule 36.22.1226. Disposal of Water.
Rule 36.22.1227. Earthen Pits and Ponds.
Rule 36.22.1228. Disposal by Injection.
Rule 36.22.1229. Water Injection and Gas Repressuring.
Rule 36.22.1230. Application Contents and Requirements.
Rule 36.22.1231. Notice of Application Objections.
Rule 36.22.1232. Board Authorization.
Rule 36.22.1233. Notice of Commencement or Discontinuance—Plugging of Abandoned Wells.
Rule 36.22.1234. Record Required.
Rules 36.22.1235 through 36.22.1239. Reserved.
Rule 36.22.1240. Report of Well Status Change.
Rule 36.22.1241. Service Company Reports.
Rule 36.22.1242. Reports by Producers.
Rule 36.22.1243. Reports from Transporters, Refiners, and Gasoline or Extraction Plants.
Rule 36.22.1244. Producer's Certificate of Compliance.
Rule 36.22.1245. Illegal Production.
Rule 36.22.1301. Notice and Approval of Intention to Abandon Report.
Rule 36.22.1302. Notice of Abandonment.
Rule 36.22.1303. Well Plugging Requirement.
Rule 36.22.1304. Plugging Methods and Procedure.
Rule 36.22.1305. Exception for Fresh Water Wells.
Rule 36.22.1306. Approval for Pulling Casing and Reentering Wells.
Rule 36.22.1307. Restoration of Surface.
Rule 36.22.1308. Plugging and Restoration Bond.
Rule 36.22.1309. Subsequent Report of Abandonment.
Rule 36.22.1401. Definitions.
Rule 36.22.1402. Underground Injection.
Rule 36.22.1403. Application Contents and Requirements Rules.
Rule 36.22.1404 and 36.22.1405. Reserved.
Rule 36.22.1406. Corrective Action.
Rule 36.22.1407. Signing the Application.
Rule 36.22.1408. Financial Responsibility.
Rule 36.22.1409. Hearings.
Rule 36.22.1410. Notice of Application.
Rule 36.22.1411. Board Authorization.
Rules 36.22.1412 and 36.22.1413. Reserved.
Rule 36.22.1414. Notice of Commencement or Discontinuance—Plugging of Abandoned Wells.
Rule 36.22.1415. Records Required.
Rule 36.22.1416. Mechanical Integrity.
Rule 36.22.1417. Notification of Tests—Reporting Results.
Rule 36.22.1418. Exempt Aquifers.
Rule 36.22.1419. Tubingless Completions.
Rules 36.22.1420 and 36.22.1421. Reserved.
Rule 36.22.1422. Permit Conditions.
Rule 36.22.1423. Injection Fee—Well Classification.
Rule 36.22.1601. Who May Apply for Determination.
Rule 36.22.1602. Application Requirements and Contents.
Rule 36.22.1603. Documents and Technical Data Supporting Application.
Rule 36.22.1604. Docket Number.
Rule 36.22.1605. List of Applications—Public Access.
Rule 36.22.1606. Objections to Applications.
Rule 36.22.1607. Deadlines for Action Determinations.
Rule 36.22.1608. Deficient Applications.
Rule 36.22.1609. Board Action on Applications.
Rule 36.22.1610. Special Findings and Determinations New Onshore Production Wells Under Section 103.
Rule 36.22.1611. Special Findings and Determinations Stripper Well Production.

[61 FR 58934, Nov. 19, 1996]

Subpart CC—Nebraska

§ 147.1400 State-administered program—Class II wells.

The UIC program for Class II wells in the State of Nebraska, except those on Indian lands, is the program administered by the Nebraska Oil and Gas Conservation Commission, approved by EPA pursuant to section 1425 of the SDWA.

(a) *Incorporation by reference.* The requirements set forth in the State statutes and regulations cited in this paragraph are hereby incorporated by reference and made a part of the applicable UIC program under the SDWA for the State of Nebraska. This incorporation by reference was approved by the Director of the Federal Register on June 25, 1984.

(1) Rules and Regulations of the Nebraska Oil and Gas Conservation Commission, Rules 1 through 6 (as published by the Commission, May 1981);

(2) Revised Statutes of Nebraska, sections 57–903 and 57–906 (Reissue 1988).

(b) *Other laws*. The following statutes and regulations, although not incorporated by reference except for select sections identified in paragraph (a) of this section, are also part of the approved state-administered program:

(1) Chapter 57, Oil and Gas Conservation, Revised Statutes of Nebraska sections 57–901 through 57–922 (Reissue 1985).

(c) The Memorandum of Agreement between EPA Region VII and the Nebraska Oil and Gas Conservation Commission, signed by the EPA Regional Administrator on July 12, 1982.

(d) *Statement of legal authority*. (1) ''Nebraska Underground Injection Control Program, Attorney General's Statement for Class II Wells,'' signed by Assistant Attorney General for Attorney General of Nebraska, as submitted with ''State of Nebraska Request for Administration of UIC Program,'' January 23, 1982;

(2) ''Re: Nebraska Underground Injection Control Program, Addendum to Attorney General's Statement for Class II Wells,'' signed by Assistant Attorney General for Attorney General of Nebraska,'' undated.

(e) The Program Description and any other materials submitted as part of the application or as supplements thereto.

[49 FR 20197, May 11, 1984, as amended at 52 FR 17681, May 11, 1987; 56 FR 9417, Mar. 6, 1991]

§ 147.1401 State administered program—Class I, III, IV and V wells.

The UIC program for Class I, III, IV, and V wells in the State of Nebraska, except those on Indian lands, is the program administered by the Nebraska Department of Environmental Control, approved by EPA pursuant to section 1422 of the SDWA.

(a) *Incorporation by reference*. The requirements set forth in the State statutes and regulations cited in this paragraph are hereby incorporated by reference and made a part of the applicable UIC program under the SDWA for the State of Nebraska. This incorporation by reference was approved by the Director of the Federal Register effective June 26, 1984.

(1) Nebraska Environmental Protection Act, Revised Statutes of Nebraska sections 81–1502, 81–1506, 81–1519, and 81–1520 (Reissue 1987);

(2) Nebraska Department of Environmental Control, Title 122—Rules and Regulations for Underground Injection and Mineral Production Wells, Effective Date: February 16, 1982, Amended Dates: November 12, 1983, March 22, 1984; as amended by amendment approved by the Governor on January 2, 1989.

(b) *Other laws*. The following statutes and regulations although not incorporated by reference, also are part of the approved State-administered program:

(1) Nebraska Environmental Protection Act, Nebraska Revised Statutes sections 81–1502, 81–1506, 81–1519, and 81–1520 (Reissue 1987 and Cumm. Supp. 1988);

(c)(1) The Memorandum of Agreement between EPA Region VII and the Nebraska Department of Environmental Control, signed by the EPA Regional Administrator on July 12, 1982.

(2) Addendum to Underground Injection Control Memorandum of Agreement signed by the EPA Regional Administrator on July 12, 1982.

(3) Amendments to the Memorandum of Agreement signed by the EPA Regional Administrator on November 22, 1983.

(d) *Statement of legal authority*. (1) ''Nebraska Underground Injection Control Program, Attorney General's Statement for Class I, III, IV, and V Wells'', signed by Assistant Attorney General for Attorney General of Nebraska, as submitted with ''State of Nebraska Request for Administration of UIC Program, January 28, 1982;

(2) Letter from Attorney General (of Nebraska), by Assistant Attorney General, to Director, (Nebraska) Department of Environmental Control, August 7, 1981;

(3) Letter from Attorney General (of Nebraska), by Assistant Attorney General, to Director, (Nebraska) Department of Environmental Control, April 29, 1982;

(4) Letter from Attorney General (of Nebraska), by Assistant Attorney General, to Legal Counsel, (Nebraska) Department of Environmental Control, October 18, 1983.

(e) The Program Description and any other materials submitted as part of the original application or as supplements thereto.

(42 U.S.C. 1422)

[49 FR 24134, June 12, 1984, as amended at 52 FR 17681, May 11, 1987; 56 FR 9417, Mar. 6, 1991]

§ 147.1402 Aquifer exemptions. [Reserved]

§ 147.1403 EPA-administered program—Indian lands.

(a) *Contents*. The UIC program for all classes of wells on Indian lands in the State of Nebraska is administered by EPA. This program consists of the UIC program requirements of 40 CFR parts 124, 144, 146, 148, and any additional requirements set forth in the remainder of this subpart. Injection well owners and operators, and EPA shall comply with these requirements.

(b) *Effective date*. The effective date of the UIC program for Indian Lands in Nebraska is June 25, 1984.

[52 FR 17681, May 11, 1987, as amended at 56 FR 9417, Mar. 6, 1991]

Subpart DD—Nevada

§ 147.1450 State-administered program.

The UIC program for all classes of underground injection wells in the State of Nevada, other than those on Indian lands, is the program administered by the Nevada Division of Environmental Protection approved by EPA pursuant to section 1422 of the SDWA. Notice of this approval was published in the FEDERAL REGISTER on February 18, 1988; the effective date of this program is October 5, 1988. This program consists of the following elements, as submitted to EPA in the State's program application.

(a) *Incorporation by reference*. The requirements set forth in the State statutes and regulations cited in this paragraph are hereby incorporated by reference and made a part of the applicable UIC program under the SDWA for the State of Nevada. This incorporation by reference was approved by the Director of the Federal Register in accordance with 5 U.S.C. 552(a) and 1 CFR part 51. Copies may be obtained at the Nevada Department of Conservation and Natural Resources, Division of Environmental Protection, 201 South Fall Street, Carson City, Nevada 89710.

Copies may be inspected at the Environmental Protection Agency, Region IX, 215 Fremont Street, San Francisco, California 99105, or at the National Archives and Records Administration (NARA). For information on the availability of this material at NARA, call 202–741–6030, or go to: *http://www.archives.gov/federal_register/code_of_federal_regulations/ibr_locations.html*.

(1) Nevada Revised Statutes [NRS], Volume 25, Chapters 445.131 through 445.354, Inclusive. 1987.

(2) Nevada Revised Statutes [NRS], Volume 29, Chapters 534A.010 through 534A.090, Inclusive. 1987.

(3) Nevada Revised Statutes [NRS], Volume 28, Chapters 522.010 through 522.190, Inclusive. 1987.

(4) Nevada Administrative Code [NAC], Underground Injection Control Regulations, Sections 1 through 96.1, Inclusive. July 22, 1987, revised September 3, 1987 (amending NAC Chapter 445).

(5) Nevada Administrative Code [NAC], Regulations and Rules of Practice and Procedure adopted Pursuant to NRS 534A, Sections 1 through 69, Inclusive. November 12, 1985 (amending NAC Chapter 534A).

(6) Nevada Administrative Code [NAC], Regulations and Rules of Practice and Procedure adopted Pursuant to NRS 522.010 through 522.625, Inclusive. July 22, 1987 (amending NAC Chapter 522).

(b) The Memorandum of Agreement between EPA Region 9 and the Nevada Department of Conservation and Natural Resources signed by the EPA Regional Administrator on April 6, 1988.

(c) *Statement of Legal Authority*. Statement and Amendment to the Statement from the Attorney General of the State of Nevada, signed on July

22, 1987 and November 6, 1987 respectively, by the Deputy Attorney General.

(d) The Program Description and any other materials submitted as part of the original application or as supplements thereto.

[53 FR 39089, Oct. 5, 1988]

§ 147.1451 EPA administered program—Indian lands.

(a) *Contents*. The UIC program for all classes of wells on Indian lands in the State of Nevada is administered by EPA. This program consists of the UIC program requirements of 40 CFR parts 124, 144, 146, 148, and any additional requirements set forth in the remainder of this subpart. Injection well owners and operators, and EPA shall comply with these requirements.

(b) *Effective dates*. The effective date of the UIC program for Indian lands in Nevada is June 25, 1984.

[53 FR 43088, Oct. 25, 1988, as amended at 56 FR 9417, Mar. 6, 1991]

§ 147.1452 Aquifer exemptions. [Reserved]

§ 147.1453 Existing Class I, II (except enhanced recovery and hydrocarbon storage) and III wells authorized by rule.

Maximum injection pressure. The owner or operator shall limit injection pressure to the lesser of:

(a) A value which will not exceed the operating requirements of § 144.28(f)(3)(i) or (ii) as applicable; or

(b) A value for well head pressure calculated by using the formula:

$$Pm = (0.733–0.433\ Sg)d$$

where:

Pm = injection pressure at the wellhead in pounds per square inch

Sg = specific gravity of injected fluid (unitless)

d = injection depth in feet.

§ 147.1454 Existing Class II enhanced recovery and hydrocarbon storage wells authorized by rule.

(a) *Maximum injection pressure*. (1) To meet the operating requirements of § 144.28(f)(3)(ii) (A) and (B) of this chapter, the owner or operator:

(i) Shall use an injection pressure no greater than the pressure established by the Regional Administrator for the field or formation in which the well is located. The Regional Administrator shall establish such a maximum pressure after notice, opportunity for comment, and opportunity for a public hearing, according to the provisions of part 124, subpart A of this chapter, and will inform owners and operators in writing of the applicable maximum pressure; or

(ii) May inject at pressures greater than those specified in paragraph (a)(1)(i) of this section for the field or formation in which he is operating provided he submits a request in writing to the Regional Administrator, and demonstrates to the satisfaction of the Regional Administrator that such injection pressure will not violate the requirement of § 144.28(f)(3)(ii) (A) and (B). The Regional Administrator may grant such a request after notice, opportunity for comment, and opportunity for public hearing, according to the provisions of part 124, subpart A of this chapter.

(2) Prior to such time as the Regional Administrator establishes field rules for maximum injection pressure based on data provided pursuant to paragraph (a)(2)(ii) of this section the owner or operator shall:

(i) Limit injection pressure to a value which will not exceed the operating requirements of § 144.28(f)(3)(ii); and

(ii) Submit data acceptable to the Regional Administrator which defines the fracture pressure of the formation in which injection is taking place. A single test may be submitted on behalf of two or more operators conducting operations in the same formation, if the Regional Administrator approves such submission. The data shall be submitted to the Regional Administrator within one year following the effective date of this program.

(b) *Casing and cementing*. Where the Regional Administrator determines that the owner or operator of an existing enhanced recovery or hydrocarbon storage well may not be in compliance with the requirements of §§ 144.28(e) and 146.22, the owner or operator shall comply with paragraphs (b) (1) through (4) of this section, when required by the Regional Administrator:

(1) Protect USDWs by:

(i) Cementing surface casing by recirculating the cement to the surface from a point 50 feet below the lowermost USDW; or

(ii) Isolating all USDWs by placing cement between the outermost casing and the well bore; and

(2) Isolate any injection zones by placing sufficient cement to fill the calculated space between the casing and the well bore to a point 250 feet above the injection zone; and

(3) Use cement:

(i) Of sufficient quantity and quality to withstand the maximum operating pressure;

(ii) Which is resistant to deterioration from formation and injection fluids; and

(iii) In a quantity no less than 120% of the calculated volume necessary to cement off a zone.

(4) The Regional Administrator may specify other requirements in addition to or in lieu of the requirements set forth in paragraphs (b) (1) through (3) of this section, as needed to protect USDWs.

Subpart EE—New Hampshire

§ 147.1500 State-administered program.

The UIC program for all classes of wells in the State of New Hampshire, except those wells on Indian lands, is the program administered by the New Hampshire Department of Environmental Services, approved by the EPA pursuant to section 1422 of the SDWA. Notice of this approval was published in the FR on September 21, 1982 (47 FR 41561); the effective date of this program is October 21, 1982. This program consists of the following elements:

(a) *Incorporation by reference.* The requirements set forth in the State statutes and regulations cited in this paragraph are hereby incorporated by reference and made a part of the applicable UIC program under the SDWA for the State of New Hampshire. This incorporation by reference was approved by the Director of the Federal Register on June 25, 1984.

(1) New Hampshire Revised Statutes Annotated section 149:8 III(a) (1978);

(2) New Hampshire Code of Administrative Rules, Part Wc 410 (Protection of Groundwaters of the State, sections Ws 410.1 through Ws 410.16) (Issue Ws 3–82).

(b)(1) The Memorandum of Agreement between EPA Region I and the New Hampshire Water Supply and Pollution Control Commission, signed by the EPA Regional Administrator on August 23, 1982;

(2) Amendment No. 1 to the Memorandum of Agreement, signed by the EPA Regional Administrator on July 16, 1982.

(c) *Statement of legal authority.* (1) Letter from Attorney General of New Hampshire to Regional Administrator, EPA Region I, ''Re: Attorney General's Statement—Underground Injection Control Program,'' March 23, 1982;

(2) Letter from Attorney General of New Hampshire to Regional Administrator, EPA Region I, ''Re: Attorney General's Statement—Underground Injection Control Program,'' July 1, 1982.

(d) The Program Description and any other materials submitted as part of the application or as supplements thereto.

[49 FR 20197, May 11, 1984, as amended at 53 FR 43088, Oct. 25, 1988; 56 FR 9417, Mar. 6, 1991]

§ 147.1501 EPA-administered program—Indian lands.

(a) *Contents.* The UIC program for all classes of wells on Indian lands in the State of New Hampshire is administered by EPA. This program consists of the UIC program requirements of 40 CFR parts 124, 144, 146, 148, and any additional requirements set forth in the remainder of this subpart. Injection well owners and operators, and EPA shall comply with these requirements.

(b) *Effective date.* The effective date of the UIC program for Indian lands in New Hampshire is November 25, 1988.

[53 FR 43088, Oct. 25, 1988, as amended at 56 FR 9417, Mar. 6, 1991]

Subpart FF—New Jersey

§ 147.1550 State-administered program.

The UIC program for all classes of wells in the State of New Jersey, except those on Indian lands, is the program administered by the New Jersey Department of Environmental Protection, approved by EPA pursuant to section 1422 of the SDWA. Notice of this approval was published in the FEDERAL REGISTER on July 15, 1983 (48 FR 32343); the effective date of this program is August 15, 1983. This program consists of the following elements, as submitted to EPA in the State's program application.

(a) *Incorporation by reference.* The requirements set forth in the State statutes and regulations cited in this paragraph are hereby incorporated by reference and made a part of the applicable UIC program under the SDWA for the State of New Jersey. This incorporation by reference was approved by the Director of the Federal Register on June 25, 1984.

(1) Water Pollution Control Act, New Jersey Statutes Annotated sections 58:10A–1 through 58:10A–20 (West 1982 and Supp. 1990);

(2) New Jersey Administrative Code, sections 7:14A–1.1 through 1.9 (subchapter 1), 7:14A–2.1 through 2.15 (subchapter 2), 7:14A–5.1 through 5.17, (subchapter 5) (amended March 1988).

(b)(1) The Memorandum Agreement between EPA Region II and the New Jersey Department of Environmental Protection, signed by the EPA Regional Administrator on September 9, 1982;

(2) Letter from Commissioner, New Jersey Department of Environmental Protection, to Regional Administrator, EPA Region II, March 21, 1983.

(c) *Statement of legal authority.* (1) Letter from Attorney General of New Jersey (by Deputy Attorney General) to Commissioner, Department of Environmental Protection, ''Re: New Jersey Pollutant Discharge Elimination System—Underground Injection Control,'' February 9, 1982;

(2) Letter from Attorney General of New Jersey (by Deputy Attorney General) to Commissioner, Department of Environmental Protection, ''Re: New Jersey Pollutant Discharge Elimination System—Underground Injection Control,'' April 15, 1983 (six pages);

(3) Letter from Attorney General of New Jersey (by Assistant Attorney General) to Commissioner, Department of Environmental Protection, ''Re: New Jersey Pollutant Discharge Elimination System—Underground Injection Control,'' April 15, 1983 (two pages).

(d) The Program Description and any other materials submitted as part of the application or as supplements thereto.

[49 FR 20197, May 11, 1984, as amended at 53 FR 43089, Oct. 25, 1988; 56 FR 9417, Mar. 6, 1991]

§ 147.1551 EPA-administered program—Indian lands.

(a) *Contents.* The UIC program for all classes of wells on Indian lands in the State of New Jersey is administered by EPA. This program consists of the UIC program requirements of 40 CFR parts 124, 144, 146, 148, and any additional requirements set forth in the remainder of this subpart. Injection well owners and operators, and EPA shall comply with these requirements.

(b) *Effective date.* The effective date of the UIC program for Indian lands in New Jersey is November 25, 1988.

[53 FR 43089, Oct. 25, 1988, as amended at 56 FR 9417, Mar. 6, 1991]

Subpart GG—New Mexico

§ 147.1600 State-administered program—Class II wells.

The UIC program for Class II wells in the State of New Mexico, except for those on Indian lands, is the program administered by the New Mexico Energy and Minerals Department, Oil Conservation Division, approved by EPA pursuant to section 1425 of the SDWA. Notice of this approval was published in the FEDERAL REGISTER on February 5, 1982 (47 FR 5412); the effective date of this program is March 7, 1982. This program consists of the following elements as submitted to EPA in the State's program application:

(a) *Incorporation by reference.* The requirements set forth in the State statutes and regulations cited in this paragraph are hereby incorporated by reference and made a part of the applicable UIC program under the SDWA for the State of New Mexico. This incorporation by reference was approved by the Director of the Federal Register on June 25, 1984.

(1) Oil and Gas Act, New Mexico Statutes Annotated sections 70–2–1 through –36 (1978);

(2) *State of New Mexico Energy and Mineral Department, Oil Conservation Division—Rules and Regulations* (dated 10–1–78), sections B–3, I–701 through I–708, M–1100 through M–1121.

(b)(1) The Memorandum of Agreement between EPA Region VI and the New Mexico Energy and Minerals Department, Oil Conservation Division, signed by the EPA Regional Administrator on December 10, 1981;

(2) Addendum No. 1 to the Memorandum of Agreement, signed by the EPA Regional Administrator on June 28, 1982;

(3) Addendum No. 2 to the Memorandum of Agreement, signed by the EPA Regional Administrator on November 18, 1982;

(4) Letter from Director, Oil Conservation Division, New Mexico Energy and Minerals Department, and Assistant Attorney General of New Mexico, to Regional Administrator, EPA Region VI, November 6, 1981.

(c) *Statement of legal authority.* ''Statement of Legal Authority of the State of New Mexico by and through its Oil Conservation Division of the Energy and Mines Department to conduct an Underground Injection Control Program,'' signed by Assistant Attorney General and General Counsel to the Oil Conservation Division.

(d) The Program Description and any other materials submitted as part of the application or as supplements thereto.

[49 FR 20197, May 11, 1984, as amended at 53 FR 43089, Oct. 25, 1988]

§ 147.1601 State-administered program—Class I, III, IV and V wells.

The UIC program for Class I, III, IV and V injection wells in the State of New Mexico, except for those on Indian lands, is the program administered by the New Mexico Water Quality Control Commission, the Environmental Improvement Division, and the Oil Conservation Division, approved by EPA pursuant to section 1422 of the SDWA. Notice of this approval was published in the FEDERAL REGISTER on July 11, 1983 (48 FR 31640); the effective date of this program is August 10, 1983. This program consists of the following elements, as submitted to EPA in the State's program application:

(a) *Incorporation by reference.* The requirements set forth in the State statutes and regulations cited in this paragraph are hereby incorporated by reference and made a part of the applicable UIC program under the SDWA for the State of New Mexico. This incorporation by reference was approved by the Director of the Federal Register on June 25, 1984.

(1) New Mexico Water Quality Control Commission Regulations (WQCC 82–1) sections 1–100 through 5–300 (September 20, 1982).

(b) *Other laws.* The following statutes and regulations, although not incorporated by reference, are also part of the approved State-administered UIC program:

(1) Water Quality Act, New Mexico Statutes Annotated sections 74–6–1 through 74–6–13 (1978 and Supp. 1982);

(2) Geothermal Resources Conservation Act, New Mexico Statutes Annotated sections 71–5–1 through 71–5–24 (1978 and Supp. 1982);

(3) Surface Mining Act, New Mexico Statutes Annotated sections 69–25A–1 through 69–25A–35 (1978 and Supp. 1980).

(c)(1) The Memorandum of Agreement between EPA Region VI and the New Mexico Water Quality Control Commission, the Environmental Improvement Division, and the Oil Conservation Division, signed by the EPA Regional Administrator on April 13, 1983;

(2) Letter from the Director, Environmental Improvement Division and the Director, Oil Conservation Division, to Regional Administrator, EPA Region IV, ''Re: New Mexico Underground Injection Control Program—Clarification,'' February 10, 1983.

(d) *Statement of legal authority.* ''Attorney General's Statement,'' signed

by the Assistant Attorney General for the Environmental Improvement Division, the Assistant Attorney General for Oil Conservation Division, and the Deputy Attorney General, Civil Division, Counsel for the Mining and Minerals Division, undated, submitted December 8, 1982.

(e) The Program Description and any other materials submitted as part of the application or as supplements thereto.

[49 FR 20197, May 11, 1984, as amended at 53 FR 43089, Oct. 25, 1988]

§ 147.1603 EPA-administered program—Indian lands.

(a) *Contents*. The UIC program for all classes of wells on Indian lands in New Mexico, except for Class II wells on Navajo Indian lands for which EPA has granted the Navajo Nation primacy for the SDWA Class II UIC program (as defined in § 147.3400), is administered by EPA. The program consists of the requirements set forth at Subpart HHH of this part. Injection well owners and operators and EPA shall comply with these requirements.

(b) *Effective date*. The effective date for the UIC program on Indian lands in New Mexico, except for Class II wells on Navajo Indian lands for which EPA has granted the Navajo Nation primacy for the SDWA Class II UIC program (as defined in § 147.3400), is November 25, 1988.

[53 FR 43089, Oct. 25, 1988, as amended at 73 FR 65565, Nov. 4, 2008]

Subpart HH—New York

§ 147.1650 State-administered program. [Reserved]

§ 147.1651 EPA-administered program.

(a) *Contents*. The UIC program for the State of New York, including all Indian lands, is administered by EPA. The program consists of the UIC program requirements of 40 CFR parts 124, 144, 146, 148, and any additional requirements set forth in the remainder of this subpart. Injection well owners and operators, and EPA shall comply with these requirements.

(b) *Effective dates*. The effective date of the UIC program for New York for all injection activities except those on lands of the Seneca Indian Tribe is June 25, 1984. The effective date for the UIC program for the lands of the Seneca Indian Tribe is November 25, 1988.

[53 FR 43089, Oct. 25, 1988; 54 FR 10616, Mar. 14, 1989, as amended at 56 FR 9417, Mar. 6, 1991]

§ 147.1652 Aquifer exemptions.

(a) This section identifies any aquifer or their portions exempted in accordance with §§ 144.7(b) and 146.4 of this chapter at the time of program promulgation. EPA may in the future exempt other aquifers or portions, according to applicable procedures, without codifying such exemptions in this section. An updated list of exemptions will be maintained in the Regional office.

(b) The following portions of aquifers are exempted in accordance with the provisions of §§ 144.7(b) and 146.4 of this chapter for Class II injection activities only:

(1) The Bradford First, Second, and Third Sand Members and the Kane Sand Member in the Bradford Field in Cattaraugus County.

(2) The Chipmunk Oil field in Cattaraugus County.

§ 147.1653 Existing Class I, II (except enhanced recovery and hydrocarbon storage) and III wells authorized by rule.

Maximum injection pressure. The owner or operator shall limit injection pressure to the lesser of:

(a) A value which will not exceed the operating requirements of § 144.28(f)(3)(i) or (ii) as applicable; or

(b) A value for well head pressure calculated by using the following formula:

$$Pm = (0.733 - 0.433\ Sg)d$$

where:

Pm = injection pressure at the well head in pounds per square inch

Sg = specific gravity of inject fluid (unitless)

d = injection depth in feet.

§ 147.1654 Existing Class II enhanced recovery and hydrocarbon storage wells authorized by rule.

(a) *Maximum injection pressure*. (1) To meet the operating requirements of § 144.28(f)(3)(ii) (A) and (B) of this chapter, the owner or operator:

(i) Shall use an injection pressure no greater than the pressure established

by the Regional Administrator for the field or formation in which the well is located. The Regional Administrator shall establish such a maximum pressure after notice, opportunity for comment, and opportunity for a public hearing, according to the provisions of part 124, subpart A of this chapter, and will inform owners and operators in writing of the applicable maximum pressure, or

(ii) May inject at pressures greater than those specified in paragraph (a)(1)(i) of this section for the field or formation in which he is operating provided he submits a request in writing to the Regional Administrator, and demonstrates to the satisfaction of the Regional Administrator that such injection pressure will not violate the requirement of §144.28(f)(3)(ii) (A) and (B). The Regional Administrator may grant such a request after notice, opportunity for comment, and opportunity for a public hearing, according to the provisions of part 124, subpart A of this chapter.

(2) Prior to such time as the Regional Administrator establishes rules for maximum injection pressure based on data provided pursuant to paragraph (a)(2)(ii) of this section the owner or operator shall:

(i) Limit injection pressure to a value which will not exceed the operating requirements of §144.28(f)(3)(ii); and

(ii) Submit data acceptable to the Regional Administrator which defines the fracture pressure of the formation in which injection is taking place. A single test may be submitted on behalf of two or more operators conducting operations in the same formation, if the Regional Administrator approves such submission. The data shall be submitted to the Regional Administrator within one year of the effective date of this program.

(b) *Casing and cementing.* Where the Regional Administrator determines that the owner or operator of an existing enhanced recovery or hydrocarbon storage well may not be in compliance with the requirements of §§144.28(e) and 146.22, the owner or operator shall comply with paragraphs (b) (1) through (4) of this section, when required by the Regional Administrator:

(1) Protect USDWs by:

(i) Cementing surface casing by recirculating the cement to the surface from a point 50 feet below the lowermost USDW; or

(ii) Isolating all USDWs by placing cement between the outermost casing and the well bore; and

(iii) For wells as described in §146.8(b)(3)(ii), installing a smaller diameter pipe inside the existing injection tubing and setting it on an appropriate packer; and

(2) Isolate any injection zones by placing sufficient cement to fill the calculated space between the casing and the well bore to a point 50 feet above the injection zone; and

(3) Use cement:

(i) Of sufficient quantity and quality to withstand the maximum operating pressure;

(ii) Which is resistant to deterioration from formation and injection fluids; and

(iii) In a quantity no less than 120% of the calculated volume necessary to cement off a zone.

(4) The Regional Administrator may specify other requirements in addition to or in lieu of the requirements set forth in paragraphs (b) (1) through (3) of this section as needed to protect USDWs.

§147.1655 Requirements for wells authorized by permit.

(a) The owner or operator of a Class I well authorized by permit shall install or shall ensure that the well has:

(1) Surface casing present;

(i) Extending from the surface to a depth at least 50 feet below the base of the lowermost USDW; and

(ii) Cemented back to the surface by recirculating the cement; and

(2) Long string casing and tubing;

(i) Extending to the injection zone; and

(ii) Cemented back to 50 feet above the base of the next largest casing string.

(b) The owner or operator of a new Class II well authorized by permit shall:

(1) Install surface casing from the surface to at least 50 feet below the base of the lowermost USDW.

(2) Cement the casing by recirculating to the surface or by using no less than 120% of the calculated annular volume.

(3) For new enhanced recovery wells, install tubing or long string casing extending to the injection zone.

(4) For new salt water disposal wells, install long string casing and tubing extending to the injection zone.

(5) Isolate any injection zone by placing sufficient cement to fill the calculated volume to a point 50 feet above the injection zone.

(c) The Regional Administrator may specify casing and cementing requirements other than those listed in paragraphs (a) and (b) of this section on a case by case basis as conditions of the permit.

Subpart II—North Carolina

§ 147.1700 State-administered program.

The UIC program for all classes of wells in the State of North Carolina, except those wells on Indian lands, is the program administered by the North Carolina Department of Environment, Health and Natural Resources approved by EPA pursuant to section 1422 of the SDWA. Notice of this approval was published in the FEDERAL REGISTER on April 19, 1984 (49 FR 15553); the effective date of this program is April 19, 1984. This program consists of the following elements, as submitted to EPA in the State's program application:

(a) *Incorporation by reference*. The requirements set forth in the State statutes and regulations cited in this paragraph are hereby incorporated by reference and made a part of the applicable UIC program under the SDWA for the State of North Carolina. This incorporation by reference was approved by the Director of the OFR in accordance with 5 U.S.C. 552(a) and 1 CFR part 51. Copies may be obtained at the North Carolina Department of Environment, Health and Natural Resources, P.O. Box 27687, Raleigh, North Carolina 27611. Copies may be inspected at the Environmental Protection Agency, Region IV, 345 Courtland Street, NE., Atlanta, Georgia 30365, or at the National Archives and Records Administration (NARA). For information on the availability of this material at NARA, call 202–741–6030, or go to: *http://www.archives.gov/federal_register/code_of_federal_regulations/ibr_locations.html*.

(1) Administrative Procedure Act, N.C. GEN. STAT. 150B–1 through 150B–64 (1987 and Cumm. Supp. 1989);

(2) North Carolina Well Construction Act, N.C. GEN. STAT. §§ 87–83 through 87–99 (1989 and Cumm. Supp. 1989);

(3) Water and Air Resources, N.C. GEN. STAT. §§ 143–211 through 143–215.10 (1987 and Cumm. Supp. 1989);

(4) Solid Waste Management, N.C. GEN. STAT. §§ 130A–290 through 130A–309.03 (1989);

(5) North Carolina Drinking Water Act, N.C. GEN. STAT. §§ 130A–311 through 130A–332 (1989);

(6) Sanitary Sewage Systems, N.C. GEN. STAT. §§ 130A–333 through 130A–335 (1989).

(b) *Other laws*. The following rules and regulations, although not incorporated by reference, are also part of the approved State-administered program:

(1) N.C. ADMIN. CODE, Title 15, r. 02L.0100 *et seq*. Groundwater Classification and Standards: General Considerations (September 22, 1988);

(2) N.C. ADMIN. CODE, Title 15, r. 02L.0100 *et seq*. Criteria and Standards Applicable to Injection Wells (September 22, 1988).

(c) *Memorandum of Agreement*. The Memorandum of Agreement between the State of North Carolina and EPA Region IV, signed March 1, 1984.

(d) *Statement of legal authority*. (1) Underground Injection Control Program, Attorney General's Statement (June 15, 1982);

(2) Amendment to Underground Injection Control Program, Attorney General's Statement (February 9, 1984).

(e) *Program Description*. The Program Description and other materials submitted as part of the application or as supplements thereto.

[56 FR 9417, Mar. 6, 1991]

§§ 147.1701–147.1702 [Reserved]

§ 147.1703 EPA-administered program—Indian lands.

(a) *Contents*. The UIC program for all classes of wells on Indian lands in the

State of North Carolina is administered by EPA. This program consists of the UIC program requirements of 40 CFR parts 124, 144, 146, 148, and any additional requirements set forth in the remainder of this subpart. Injection well owners and operators, and EPA shall comply with these requirements.

(b) *Effective date*. The effective date of the UIC program for Indian lands in North Carolina is November 25, 1988.

[53 FR 43089, Oct. 25, 1988, as amended at 56 FR 9418, Mar. 6, 1991]

§§ 147.1704–147.1749 [Reserved]

Subpart JJ—North Dakota

§ 147.1750 State-administered program—Class II wells.

The UIC program for Class II wells in the State of North Dakota, except those on Indian lands, is the program administered by the North Dakota Industrial Commission, approved by EPA pursuant to section 1425 of the SDWA. Notice of this approval was published in the FEDERAL REGISTER on August 23, 1983 (48 FR 38237); the effective date of this program is September 24, 1983. This program consists of the following elements, as submitted to EPA in the State's program application.

(a) *Incorporation by reference*. The requirements set forth in the State statutes and regulations cited in this paragraph are hereby incorporated by reference and made a part of the applicable UIC program under the SDWA for the State of North Dakota. This incorporation by reference was approved by the Director of the Federal Register on June 25, 1984.

(1) North Dakota Century Code, Chapter 38–08 (Control of Gas and Oil Resources, 1987 and Supp. 1989);

(2) North Dakota Administrative Code, Chapter 43–02–05 (Underground Injection Control, as published in *Statutes and Rules for the Conservation of Oil and Gas*, North Dakota Industrial Commission, revised effective November 1, 1987);

(3) North Dakota Administrative Code, Chapter 43–02–03 (General Rules, as published in *Statutes and Rules for the Conservation of Oil and Gas*, North Dakota Industrial Commission, revised effective November 1, 1987).

(b) The Memorandum of Agreement between EPA Region VIII and the North Dakota Industrial Commission, Oil and Gas Division, signed by the EPA Regional Administrator on June 16, 1983, as amended September 7, 1989.

(c) *Statement of legal authority*. ''Underground Injection Control Program Attorney General's Statement,'' as submitted with the North Dakota Underground Injection Control Program Primacy Application for Class II Injection Wells, transmitted by the Governor on July 15, 1982 (16 pages).

(d) The Program Description and other materials submitted as part of the application or as supplements thereto.

[49 FR 20197, May 11, 1984, as amended at 53 FR 43089, Oct. 25, 1988; 56 FR 9418, Mar. 6, 1991]

§ 147.1751 State-administered program—Class I, III, IV, V and VI wells.

The UIC Program for Class I, III, IV, and V wells in the State of North Dakota, except those located on Indian lands, as defined under 40 CFR 144.3, is the program administered by the North Dakota Department of Environmental Quality, approved by the EPA pursuant to section 1422 of the SDWA. Notification of this approval was published in the FEDERAL REGISTER on April 15, 2019; the program is effective May 15, 2019. The UIC Program for Class VI wells in the State of North Dakota, except those located on Indian lands, is the program administered by the North Dakota Industrial Commission (NDIC), approved by the EPA pursuant to section 1422 of the SDWA. Notification of this approval was published in the FEDERAL REGISTER on April 24, 2018; the effective date of the NDIC UIC Class VI program is April 24, 2018. The State-administered UIC programs for Classes I, III, IV, V, and VI consist of the following elements, as submitted to the EPA in the State's program applications.

(a) The requirements set forth in the State statutes and regulations approved by the EPA for inclusion in ''EPA-Approved North Dakota SDWA § 1422 Underground Injection Control Program Statutes and Regulations for Well Classes I, III, IV, V and VI,'' dated

January 2019, and listed in table 1 to this paragraph (a), are incorporated by reference and made a part of the applicable UIC program under the SDWA for the State of North Dakota. The Director of the Federal Register approves this incorporation by reference in accordance with 5 U.S.C. 552(a) and 1 CFR part 51. Copies of the material incorporated by reference in this paragraph (a) may be inspected at the U.S. Environmental Protection Agency, Region VIII, Library 2nd Floor, 1595 Wynkoop Street, Denver, Colorado 80202–1129. If you wish to obtain this material from the EPA Regional Office, call (303) 312–1226. Copies of this material also may be inspected at the EPA Headquarters Library, in the Water Docket, at the EPA Docket Center (EPA/DC), EPA WJC West, Room 3334, 1301 Constitution Ave. NW, Washington, DC 20460. If you wish to obtain this material from the EPA Docket Center, call (202) 566–2426. Copies of this material also may be inspected at the National Archives and Records Administration (NARA). For information on the availability of this material at NARA, call (202) 741–6030, or go to *www.archives.gov/federal-register/cfr/ibr-locations.html*.

TABLE 1 TO PARAGRAPH (a)—EPA-APPROVED NORTH DAKOTA SDWA SECTION 1422 UNDERGROUND INJECTION CONTROL PROGRAM STATUTES AND REGULATIONS FOR WELL CLASSES I, III, IV, V AND VI

State citation	Title/subject	State effective date	EPA approval date
North Dakota Century Code Sections 38–12–01 through 38–12–03.	Regulation, Development and Production of Subsurface Minerals.	1980	September 21, 1984, 49 FR 37066.
North Dakota Century Code Sections 61–28–02 and 61–28–06.	Control, Prevention and Abatement of Pollution of Surface Waters.	1989	March 6, 1991, 56 FR 9418.
North Dakota Century Code Sections 61–28.1–01 and 61–28.1–12.	Safe Drinking Water Act	2019	April 15, 2019, [insert **Federal Register** citation].
North Dakota Administrative Code Sections 33.1–25–01–01 through 33.1–25–01–18.	Underground Injection Control Program.	2019	April 15, 2019, [insert **Federal Register** citation].
North Dakota Administrative Code Sections 43–02–02–01 through 43–02–02–50.	Subsurface Mineral Exploration and Development.	1986	March 6, 1991, 56 FR 9418.
North Dakota Administrative Code Sections 43–02–02.1–01 through 43–02–02.2–19.	Underground Injection Control Program.	1984	September 21, 1984, 49 FR 37066.
North Dakota Century Code Sections 38–22–01 through 38–22–23.	Carbon Dioxide Underground Storage.	2009	April 24, 2018, 83 FR 17761.
North Dakota Administrative Code Sections 38–08–16 and 38–08–17.	Control of Oil and Gas Resources	2013	April 24, 2018, 83 FR 17761.
North Dakota Administrative Code Sections 43–05–01–01 through 43–05–01–20.	Geologic Storage of Carbon Dioxide.	2013	April 24, 2018, 83 FR 17761.

(b) The following statutes and regulations, although not incorporated by reference, also are part of the approved State-administered program:

(1) North Dakota Environmental Law Enforcement Act of 1975, North Dakota Century Code Sections 32–40–01 to 32–40–11 (1976); and

(2) North Dakota Administrative Code Article 33–22 (Practice and Procedure) (1983).

(c) The Memorandum of Agreement for the Class I, III, IV, and V Underground Injection Control Program between EPA Region 8 and the North Dakota Department of Environmental Quality, signed by the EPA Regional Administrator on September 18, 2018.

(d) The statement of legal authority, ''Class I, III, IV, and V Underground Injection Control Program, Attorney General's Statement,'' signed by the Assistant Attorney General of North Dakota on July 30, 2018, and the ''Supplement to the Attorney General Statements Relating to Programs

Being Transferred to the North Dakota Department of Environmental Quality,'' signed by the Assistant Attorney General of North Dakota on October 23, 2018.

(e) The Class I, III, IV, and V Underground Injection Control Program Description and any other materials submitted as part of the program revision or as supplements thereto.

(f) The Memorandum of Agreement for the Class VI Underground Injection Control Program between EPA Region 8 and the North Dakota Industrial Commission, signed by the EPA Regional Administrator on October 28, 2013.

(g) The Memorandum of Understanding for Class VI between the North Dakota Industrial Commission, Department of Mineral Resources, Oil and Gas Division and the North Dakota Department of Health, Water Quality Division Related to the Underground Injection Control Program, signed on June 19, 2013.

(h) The statement of legal authority, ''Class VI Underground Injection Control Program, Attorney General's Statement,'' signed by the Attorney General of North Dakota on January 22, 2013.

(i) The Class VI Underground Injection Control Program Description and any other materials submitted as part of the program revision or as supplements thereto.

[49 FR 37066, Sept. 21, 1984, as amended at 56 FR 9418, Mar. 6, 1991; 83 FR 17761, Apr. 24, 2018; 84 FR 15121, Apr. 15, 2019]

§ 147.1752 EPA-administered program—Indian lands.

(a) *Contents*. The UIC program for all classes of wells on Indian lands in the State of North Dakota is administered by EPA. This program consists of the UIC program requirements of 40 CFR parts 124, 144, 146, 148, and any additional requirements set forth in the remainder of this subpart. Injection well owners and operators, and EPA shall comply with these requirements.

(b) *Effective date*. The effective date of the UIC program for Indian lands in North Dakota is November 25, 1988.

[53 FR 43089, Oct. 25, 1988, as amended at 56 FR 9418, Mar. 6, 1991]

Subpart KK—Ohio

§ 147.1800 State-administered program—Class II wells.

The UIC program for Class II wells in the State of Ohio, except for those on Indian lands, is the program administered by the Ohio Department of Natural Resources, approved by EPA pursuant to section 1425 of the SDWA. Notice of this approval was published in the FEDERAL REGISTER on August 23, 1983 (48 FR 38238); the effective date of this program is September 22, 1983. This program consists of the following elements, as submitted to EPA in the State's program application:

(a) *Incorporation by reference*. The requirements set forth in the State statutes and regulations cited in this paragraph are hereby incorporated by reference and made a part of the applicable UIC program under the SDWA for the State of Ohio. This incorporation by reference was approved by the Director of the Federal Register on June 25, 1984.

(1) Ohio Revised Code Annotated, sections 1509.01 through 1509.22 (Page 1978 and Supp. 1982);

(2) Rules of the Division of Oil and Gas, Ohio Administrative Code sections 1501:91–01, through 1501: 9–11–13 (1983).

(b) The Memorandum of Agreement between EPA Region V and the Ohio Department of Natural Resources.

(c) *Statement of legal authority*. ''Underground Injection Control Program—Attorney General's Statement,'' signed by the Assistant Attorney General, Chief, Environmental Law Section, for the Attorney General of Ohio, September 30, 1982.

(d) The Program Description and any other materials submitted as part of the application or as supplements thereto.

[49 FR 20197, May 11, 1984, as amended at 53 FR 43089, Oct. 25, 1988]

§ 147.1801 State-administered program—Class I, III, IV and V wells.

The UIC program for Class I, III, IV, and V wells in the State of Ohio, other than those on Indian lands, is the program administered by the Ohio Department of Natural Resources and the

Ohio Environmental Protection Agency, approved by EPA pursuant to section 1422 of the SDWA. Notice of this approval was published in the FEDERAL REGISTER on November 29, 1984; the effective date of this program is January 14, 1985. This program consists of the following elements, as submitted to EPA in the State's program application.

(a) *Incorporation by reference.* The requirements set forth in the State statutes and regulations cited in this paragraph are hereby incorporated by reference and made a part of the applicable UIC program under the SDWA for the State of Ohio. This incorporation by reference was approved by the Director of the Federal Register effective January 14, 1985.

(1) Ohio Revised Code Annotated, sections 1509.01, 1509.03, 1509.221 (Supp. 1983);

(2) Rules of the Division of Oil and Gas, Ohio Administrative Code, sections 1501:9–7–01 through 7–14 (1984);

(3) Ohio Revised Code Annotated, sections 6111.04, 6111.043, 6111.044 (Supp. 1983);

(4) Rules of the Ohio Environmental Protection Agency, Ohio Administrative Code, sections 3745–34–01 through 34–41; 3745–9–01 through 9–11 (Director Ohio EPA Order, June 18, 1984).

(b) *Other laws.* The following statutes and regulations, although not incorporated by reference, also are part of the approved State-administered program:

(1) Ohio Revised Code, Chapter 119 (1978 Replacement Part);

(2) Ohio Code Supplement, sections 6111.041, 6111.042, 6111.045 (Supp. 1982).

(c) (1) The Memorandum of Agreement between EPA Region V and the Ohio Department of Natural Resources, signed by the EPA Regional Administrator on March 30, 1984;

(2) Memorandum of Agreement between the Ohio Department of Natural Resources and the Ohio Environmental Protection Agency, Related to the Underground Injection Control Program for the State of Ohio, signed August 1, 1984.

(d) *Statement of legal authority.* Statement from Attorney General of the State of Ohio, by Senior Assistant Attorney General, ''Underground Injection Control Program—Attorney General's Statement,'' July 25, 1984.

(e) The Program Description and any other materials submitted as part of the original application or as supplements thereto.

[49 FR 46897, Nov. 29, 1984]

§ 147.1802 Aquifer exemptions. [Reserved]

§ 147.1803 Existing Class I and III wells authorized by rule—maximum injection pressure.

The owner or operator shall limit injection pressure to the lesser of:

(a) A value which will not exceed the operating requirements of §144.28(f)(3)(i); or

(b) A value for well head pressure calculated by using the following formula:

$$Pm = (0.8 - 0.433\ Sg)\ d$$

where:

Pm = injection pressure at the well head in pounds per square inch

Sg = specific gravity of injected fluid (unitless)

d = injection depth in feet.

[49 FR 45308, Nov. 15, 1984]

§ 147.1805 EPA-administered program—Indian lands.

(a) *Contents.* The UIC program for all classes of wells on Indian lands in the State of Ohio is administered by EPA. This program consists of the UIC program requirements of 40 CFR parts 124, 144, 146, 148, and any additional requirements set forth in the remainder of this subpart. Injection well owners and operators, and EPA shall comply with these requirements.

(b) *Effective date.* The effective date of the UIC program for Indian lands in Ohio is November 25, 1988.

[53 FR 43089, Oct. 25, 1988, as amended at 56 FR 9418, Mar. 6, 1991]

Subpart LL—Oklahoma

§ 147.1850 State-administered program—Class I, III, IV and V wells.

The UIC program for Class I, III, IV, and V wells in the State of Oklahoma, except those on Indian lands, is the

program administered by the Oklahoma State Department of Health, approved by EPA pursuant to SDWA section 1422. Notice of this approval was published in the FEDERAL REGISTER on June 24, 1982 (47 FR 27273). The effective date of this program is July 24, 1982. This program consists of the following elements, as submitted to EPA in the State's program application:

(a) *Incorporation by reference*. The requirements set forth in the State statutes and regulations cited in this paragraph are hereby incorporated by reference and made a part of the applicable UIC program under the SDWA for the State of Oklahoma. This incorporation by reference was approved by the Director of the Federal Register on June 25, 1984.

(1) Oklahoma Statutes title 63 sections 1–901, 1–903 (1981);

(2) Oklahoma Controlled Industrial Waste Disposal Act, Oklahoma Statute Annotated title 63 sections 1–2002, 1–2014 (West Supp. 1983–1984);

(3) *Regulations*. [Reserved]

(b) *Other laws*. The following statutes and regulations, although not incorporated by reference except for select sections identified in paragraph (a) of this section, are also part of the approved State-administered UIC program:

(1) Oklahoma Open Meeting Act, Oklahoma Statutes title 25 sections 301 through 314 (Supp. 1978);

(2) Oklahoma Statutes Annotated title 63 sections 1–101 to 1–114, 1–901 to 1–911, 1–1601 *et seq.*, 1–1701, 1–2001 to 1–2014 (West 1973 and Supp. 1982);

(3) Oklahoma Statutes Annotated title 75 sections 301 to 327 (West 1976 and Supp. 1982).

(c) (1) The Memorandum of Agreement between EPA Region VI and the Oklahoma State Department of Health, signed by the EPA Regional Administrator on April 13, 1982;

(2) Memorandum of Understanding between the Oklahoma State Department of Health and the Oklahoma Corporation Commission (OCC), signed by members of the OCC on February 12, 1982;

(3) Memorandum of Understanding between the Oklahoma State Department of Health and the Oklahoma Department of Mines (ODM), signed by the Deputy Chief Mine Inspector, ODM, on February 15, 1982.

(d) *Statement of legal authority*. Letter from Attorney General of Oklahoma to Commissioner of Health, Oklahoma State Department of Health, ''Re: Statement and Memorandum of Law Concerning the Authority for the Oklahoma State Department of Health's Underground Injection Control Program,'' February 12, 1982.

(e) The Program Description and any other materials submitted as part of the application or as supplements thereto.

[49 FR 20197, May 11, 1984, as amended at 53 FR 43090, Oct. 25, 1988]

§ 147.1851 State-administered program—Class II wells.

The UIC program for Class II wells in the State of Oklahoma, including the lands of the Five Civilized Tribes, but not including those on other Indian lands, is the program administered by the Oklahoma Corporation Commission approved by EPA pursuant to SDWA section 1425. Notice of this approval was published in the FEDERAL REGISTER on December 2, 1981 (46 FR 58588). This program consists of the following elements, as submitted to EPA in the State's program application:

(a) *Incorporation by reference*. [Reserved]

(b) *Other laws*. The following statutes and regulations, although not incorporated by reference, are also part of the approved State-administered UIC program:

(1) Oklahoma Statutes, title 17 sections 51–53; title 52 sections 86.1–86.5, 139–153, 243, 307–318.1 (1971).

(2) OCC-OGR Rules No. 1–101–3–303.

(c) (1) The Memorandum of Agreement between EPA Region VI and the Oklahoma Corporation Commission, signed by the EPA Regional Administrator on April 13, 1981;

(2) Letter from the Manager, Underground Injection Control, Oklahoma Corporation Commission, to EPA, June 18, 1981.

(d) *Statement of legal authority*. ''Statement of Legal Authority of the Oklahoma Corporation Commission to Conduct an Underground Injection Control Program,'' (Part IV, pages 30–

41 of ''State of Oklahoma Primacy Application for Authority to Regulate Class II Injection Wells,'' submitted April 14, 1981), signed by the Conservation Attorney, Counsel to the Director and the Oklahoma Corporation Commission.

(e) The Program Description and any other materials submitted as part of the application or as supplements thereto.

[49 FR 20197, May 11, 1984, as amended at 53 FR 43090, Oct. 25, 1988]

§ 147.1852 EPA-administered program—Indian lands.

(a) *Contents*. The UIC program for all wells on Indian lands in Oklahoma, except Class II wells on the lands of the Five Civilized Tribes, is administered by EPA. The UIC program for Class II wells on the Osage Mineral Reserve consists of the requirements set forth in subpart GGG of this part. The UIC program for all other wells on Indian lands consists of the requirements set forth in subpart III of this part. Injection well owners and operators and EPA shall comply with these requirements.

(b) *Effective date*. The effective date for UIC program for Class II wells on the Osage Mineral Reserve is December 30, 1984. The effective date for the UIC program for all other wells on Indian lands is November 25, 1988.

[53 FR 43090, Oct. 25, 1988]

Subpart MM—Oregon

§ 147.1900 State-administered program.

The UIC program for all classes of wells in the State of Oregon, except those on Indian lands, is administered by the Oregon Department of Environmental Quality, approved by EPA pursuant to section 1422 and section 1425 of the SDWA. Notice of this approval was published in the FEDERAL REGISTER on September 25, 1984; the effective date of this program is October 9, 1984. This program consists of the following elements, as submitted to EPA in the State's program application.

(a) *Incorporation by reference*. The requirements set forth in the State statutes and regulations cited in this paragraph are hereby incorporated by reference and made a part of the applicable UIC program under the SDWA for the State of Oregon. This incorporation by reference was approved by the Director of the Federal Register effective October 9, 1984.

(1) Oregon Revised Statutes, Title 16, chapter 164, section 164.785; Title 36, chapter 468, sections 468.005, 468.065 to 468.070, 468.700 to 468.815; Title 43, chapter 520 sections 520.005, 520.095, 520.155–520.330 (1983);

(2) Oregon Administrative Rules, Chapter 340, Division 44, sections 340–44–005 through 340–44–055 (October 1983); Chapter 340, Division 45, sections 340–45–005 through 340–45–075 (January 1990); Chapter 632, Division 10, sections 632–10–002 through 632–10–235 (May 1986); Chapter 632, Division 20, sections 632–20–005 through 632–20–180 (May 1984).

(b) *Other laws*. The following statutes and regulations, although not incorporated by reference, also are part of the approved State-administered program:

(1) Oregon Revised Statutes, Chapter 183 (1987); 192.420, 192.500, 459.460(3), 468.005 through 468.605, and 468.780 through 468.997; Chapters 516 and 522 (1983);

(2) Oregon Administrative Rules, chapter 137, Div. 3 (July 1982); chapter 340, Div. 11 (April 1988); chapter 340, Div. 12 (March 1989); chapter 340, Div. 14 (November 1983); chapter 340, Div. 52 (November 1983); chapter 632, Div. 1 (June 1980); chapter 632, Div. 20 (January 1981).

(c)(1) The Memorandum of Agreement between EPA Region X and the Oregon Department of Environmental Quality, signed by the EPA Regional Administrator on May 3, 1984.

(d) *Statement of legal authority*. (1) ''Underground Injection Control Program Legal Counsel's Statement,'' October 1983, signed by the Assistant Attorney General, Oregon;

(2) Opinion of the Attorney General, Oregon, 35 Op. Attorney General 1042 (1972).

(e) The Program Description and any other materials submitted as part of

the original application or as supplements thereto.

[49 FR 37594, Sept. 25, 1984, as amended at 53 FR 43090, Oct. 25, 1988; 56 FR 9418, Mar. 6, 1991]

§ 147.1901 EPA-administered program—Indian lands.

(a) *Contents.* The UIC program for all classes of wells on Indian lands in the State of Oregon is administered by EPA. This program consists of the UIC program requirements of 40 CFR parts 124, 144, 146, 148, and any additional requirements set forth in the remainder of this subpart. Injection well owners and operators, and EPA shall comply with these requirements.

(b) *Effective date.* The effective date of the UIC program for Indian lands in Oregon is November 25, 1988.

[53 FR 43090, Oct. 25, 1988, as amended at 56 FR 9419, Mar. 6, 1991]

Subpart NN—Pennsylvania

§ 147.1950 State-administered program. [Reserved]

§ 147.1951 EPA-administered program.

(a) *Contents.* The UIC program for the State of Pennsylvania, including all Indian lands, is administered by EPA. This program consists of the UIC program requirements of 40 CFR parts 124, 144, 146, 148, and any additional requirements set forth in the remainder of this subpart. Injection well owners and operators, and EPA shall comply with these requirements.

(b) *Effective dates.* The effective date for the UIC program on Indian lands is November 25, 1988. The effective date for the UIC program for the rest of Pennsylvania is June 25, 1984.

[53 FR 43090, Oct. 25, 1988, as amended at 56 FR 9419, Mar. 6, 1991]

§ 147.1952 Aquifer exemptions.

(a) This section identifies any aquifers or their portions exempted in accordance with §§ 144.7(b) and 146.4 of this chapter at the time of program promulgation. EPA may in the future exempt other aquifers or portions, according to applicable procedures, without codifying such exemptions in this section. An updated list of exemptions will be maintained in the Regional office.

(b) Those portions of the following oil bearing aquifers, which would otherwise meet the definition of a USDW, are exempted in accordance with the provisions of §§ 144.7(b) and 146.4 of this chapter for Class II enhanced recovery injection activities only.

(1) The Sugar Run and Bradford series of oil producing sands of the Bradford Field, in McKean County; including the Bradford, West Branch, Stack, Bennett Brook, Marilla Brook, Brooder Hollow, Cyclone, Minard Run, Minard Run School, and Sugar Run (or Watsonville) Pools.

(2) The Bradford Third oil producing sand of the Guffey Field in McKean County.

(3) The Bradford series of oil producing sands of the Lewis Run Field in McKean County.

(4) The Bradford series of oil producing sands of the Windfall Field and Kings Run Pool in McKean County.

(5) The Red Valley member of the Second Sand formation of the Venango Group of oil producing sands in the Foster-Reno Field in Venango County; including the Foster, Bully Hill, Victory, Bredinsburg, Egypt Corners, Reno, Monarch Park and Seneca Pools.

(6) The Glade and Clarendon oil producing sands of the Morrison Run Field and Elk Run Pool in Warren County.

(7) The Clarendon and Glade oil producing sands of the Clarendon Field in Warren County.

(8) The Bradford Third oil producing sand in the Shinglehouse Field, including the Kings Run, Janders Run and Ceres Pools in Potter and McKean Counties.

§ 147.1953 Existing Class I, II (except enhanced recovery and hydrocarbon storage) and III wells authorized by rule.

Maximum injection pressure. The owner or operator shall limit injection pressure to the lesser of:

(a) A value which will not exceed the operating requirements of § 144.28(f)(3) (i) or (ii) as applicable or

(b) A value for well head pressure calculated by using the following formula:

$$Pm = (0.733 - 0.433\ Sg)d$$

where:

Pm = injection pressure at the well head in pounds per square inch
Sg = specific gravity of injection fluid (unitless)
d = injection depth in feet.

§ 147.1954 Existing Class II enhanced recovery and hydrocarbon storage wells authorized by rule.

(a) *Maximum injection pressure.* (1) To meet the operating requirements of § 144.28(f)(3)(ii) (A) and (B) of this chapter, the owner or operator:

(i) Shall use an injection pressure no greater than the pressure established by the Regional Administrator for the field or formation in which the well is located. The Regional Administrator shall establish such a maximum pressure after notice, opportunity for comment, and opportunity for a public hearing, according to the provisions of part 124, subpart A of this chapter, and will inform owners and operators in writing of the applicable maximum pressure; or

(ii) May inject at pressures greater than those specified in paragraph (a)(1)(i) of this section for the field or formation in which he is operating provided he submits a request in writing to the Regional Administrator, and demonstrates to the satisfaction of the Regional Administrator that such injection pressure will not violate the requirement of § 144.28(f)(3)(ii) (A) and (B). The Regional Administrator may grant such a request after notice, opportunity for comment, and opportunity for a public hearing, according to the provisions of part 124, subpart A of this chapter.

(2) Prior to such time as the Regional Administrator establishes rules for maximum injection pressure based on data provided pursuant to paragraph (a)(2)(ii) of this section the owner or operator shall:

(i) Limit injection pressure to a value which will not exceed the operating requirements of § 144.28(f)(3)(ii); and

(ii) Submit data acceptable to the Regional Administrator which defines the fracture pressure of the formation in which injection is taking place. A single test may be submitted on behalf of two or more operators conducting operations in the same formation, if the Regional Administrator approves such submission. The information shall be submitted to the Regional Administrator within one year of the effective date of this regulation.

(b) *Casing and cementing.* Where the Regional Administrator determines that the owner or operator of an existing enhanced recovery or hydrocarbon storage well may not be in compliance with the requirements of §§ 144.28(e) and 146.22, the owner or operator shall comply with paragraphs (b) (1) through (4) of this section, when required by the Regional Administrator:

(1) Protect USDWs by:

(i) Cementing surface casing by recirculating the cement to the surface from a point 50 feet below the lowermost USDW; or

(ii) Isolating all USDWs by placing cement between the outermost casing and the well bore; and

(iii) For wells as described in § 146.8(b)(3)(ii), installing a smaller diameter pipe inside the existing injection tubing and setting it on an appropriate packer; and

(2) Isolate any injection zones by placing sufficient cement to fill the calculated space between the casing and the well bore to a point 50 feet above the injection zone; and

(3) Use cement:

(i) Of sufficient quantity and quality to withstand the maximum operating pressure;

(ii) Which is resistant to deterioration from formation and injection fluids; and

(iii) In a quantity no less than 120% of the calculated volume necessary to cement off a zone.

(4) The Regional Administrator may specify other requirements in addition to or in lieu of the requirements set forth in paragraphs (b) (1) through (3) of this section as needed to protect USDWs.

§ 147.1955 Requirements for wells authorized by permit.

(a) The owner or operator of a Class I well authorized by permit shall install or shall ensure that the well has:

(1) Surface casing present;

(i) Extending from the surface to a depth at least 50 feet below the base of the lowermost USDW; and

(ii) Cemented back to the surface by recirculating the cement; and

(2) Long string casing and tubing;

(i) Extending to the injection zone; and

(ii) Cemented back to 50 feet above the base of the next largest casing string.

(b) The owner or operator of a new Class II well authorized by permit shall:

(1) Install surface casing from the surface to at least 50 feet below the base of the lowermost USDW.

(2) Cement the casing by recirculating to the surface or by using no less than 120% of the calculated annular volume.

(3) For new enhanced recovery wells, install tubing or long string casing extending to the injection zone.

(4) For new salt water disposal wells, install long string casing and tubing extending to the injection zone.

(5) Isolate any injection zone by placing sufficient cement to fill the calculated volume to a point 50 feet above the injection zone.

(c) The Regional Administrator may specify casing and cementing requirements other than those listed in paragraphs (a) and (b) of this section on a case by case basis as conditions of the permit.

Subpart OO—Rhode Island

§ 147.2000 State-administered program—Class I, II, III, IV, and V wells.

The UIC program for all classes of wells in Rhode Island, except those on Indian lands, is the program administered by the Rhode Island Department of Environmental Management, approved by EPA pursuant to section 1422 of the SDWA. Notice of this approval was published in the FEDERAL REGISTER on August 1, 1984; the effective date of this program is August 15, 1984. This program consists of the following elements, as submitted to EPA in the State's program application.

(a) *Incorporation by reference*. The requirements set forth in the State statutes and regulations cited in this paragraph are hereby incorporated by reference and made a part of the applicable UIC program under the SDWA for the State of Rhode Island. This incorporation by reference was approved by the Director of the Federal Register effective August 15, 1984.

(1) Rhode Island Gen. Laws sections 46–12–1, 46–12–5, and 46–12–28 (Supp. 1983);

(2) ''Underground Injection Control Program Rules and Regulations.'' State of Rhode Island and Providence Plantations Department of Environmental Management. Division of Water Resources (as received by the Secretary of State, May 21, 1984).

(b) *Other laws*. The following statutes and regulations although not incorporated by reference, also are part of the approved State-administered program:

(1) Rhode Island General Laws, Section 10–20–1 *et seq.*, entitled ''State Environmental Rights'';

(2) Rhode Island General Laws, Section 23–19.1–1 *et seq.*, entitled ''Hazardous Waste Management'';

(3) Rhode Island General Laws, Section 42–17.1 *et seq.*, entitled ''Department of Environmental Management'';

(4) Rhode Island General Laws, Section 42–35–1 *et seq.*, entitled ''Administrative Procedures'';

(5) Rhode Island General Laws, Section 46–12–1 *et seq.*, entitled ''Water Pollution'';

(6) Hazardous Waste Management Facility Operating Permit Rules and Regulations—Landfills, at last amended November 2, 1981 (hereinafter referred to as the ''Hazardous Waste Regulation'');

(7) Water Quality Regulations for Water Pollution Control, effective November 19, 1981; and

(8) Administrative Rules of Practices and Procedure for Department of Environmental Management, effective November 12, 1980.

(c) (1) The Memorandum of Agreement between EPA Region I and the Rhode Island Department of Environmental Management, signed by the EPA Regional Administrator on March 29, 1984;

(2) Letter from Director, Rhode Island Department of Environmental Management, to Regional Administrator, EPA Region I, amending Section III, C of the Memorandum of Agreement, April 25, 1984.

(d) *Statement of legal authority*. Letter from Attorney General, State of Rhode Island and Providence Plantations, to Regional Administrator, EPA Region 1, ''Re: Attorney General's Statement, Underground Injection Control Program,'' January 17, 1984.

(e) The Program Description and any other materials submitted as part of the original application or as supplements thereto.

[49 FR 30699, Aug. 1, 1984, as amended at 53 FR 43090, Oct. 25, 1988]

§ 147.2001 EPA-administered program—Indian lands.

(a) *Contents*. The UIC program for all classes of wells on Indian lands in the State of Rhode Island is administered by EPA. This program consists of the UIC program requirements of 40 CFR parts 124, 144, 146, 148, and any additional requirements set forth in the remainder of this subpart. Injection well owners and operators, and EPA shall comply with these requirements.

(b) *Effective date*. The effective date of the UIC program for Indian lands in Rhode Island is November 25, 1988.

[53 FR 43090, Oct. 25, 1988, as amended at 56 FR 9419, Mar. 6, 1991]

Subpart PP—South Carolina

§ 147.2050 State-administered program.

The UIC program for all classes of wells in the State of South Carolina, except for those on Indian lands, is the program administered by the South Carolina Department of Health and Environmental Control, approved by EPA pursuant to section 1422 of the SDWA. Notice of this approval was published in the FEDERAL REGISTER on July 10, 1984; the effective date of this program is July 24, 1984. This program consists of the following elements, as submitted to EPA in the State's program application.

(a) *Incorporation by reference*. The requirements set forth in the State statutes and regulations cited in this paragraph are hereby incorporated by reference and made a part of the applicable UIC program under the SDWA for the State of South Carolina. This incorporation by reference was approved by the Director of the Federal Register effective July 24, 1984.

(1) Pollution Control Act, S.C. Code Ann. Sections 48–1–10, 48–1–90, 48–1–100, 48–1–110 (Law. Co-op. 1976 and Supp. 1983).

(2) South Carolina Department of Health and Environmental Control, Ground-Water Protection Division, Underground Injection Control Regulations, R–61–87, Effective Date: June 24, 1983 Published in South Carolina State Register, Volume 7, Issue 6; Amended Date: March 23, 1984, as amended by notice in South Carolina State Register, Volume 8, Issue 3.

(b) *Other laws*. The following statutes and regulations although not incorporated by reference, also are part of the approved State-Administered program:

(1) Pollution Control Act, S.C. Code Ann. Sections 48–1–10 to 48–1–350 (Law. Co-op. 1976 and Supp. 1983).

(2) State Safe Drinking Water Act, S.C. Code Ann. Sections 44–55–10 to 44–55–100 (Law. Co-op. 1976 and Supp. 1983).

(3) Administrative Procedures Act, S.C. Code Ann. Sections 1–23–10 *et seq.*, and 1–23–310 to 1–23–400 (Law. Co-op. 1976 and Supp. 1983).

(4) S.C. Code Ann. Sections 15–5–20, 15–5–200 (Law. Co-op. 1976 and Supp. 1983).

(c)(1) The Memorandum of Agreement between EPA Region IV and the South Carolina Department of Health and Environmental Control signed by the EPA Regional Administrator on May 29, 1984.

(d) *Statement of legal authority*. (1) ''Underground Injection Control Program, Attorney General's Statement for Class I, II, III, IV and VA and VB Wells,'' signed by the Attorney General of South Carolina on April 27, 1984.

(e) The Program Description and any other materials submitted as part of the original application or as supplements thereto.

[49 FR 28058, July 10, 1984, as amended at 53 FR 43090, Oct. 25, 1988]

§ 147.2051 EPA-administered program—Indian lands.

(a) *Contents*. The UIC program for all classes of wells on Indian lands in the State of Rhode Island is administered by EPA. This program consists of the

UIC program requirements of 40 CFR parts 124, 144, 146, 148, and any additional requirements set forth in the remainder of this subpart. Injection well owners and operators, and EPA shall comply with these requirements.

(b) *Effective date.* The effective date of the UIC program for Indian lands in South Carolina is November 25, 1988.

[53 FR 43090, Oct. 25, 1988, as amended at 56 FR 9419, Mar. 6, 1991]

Subpart QQ—South Dakota

§ 147.2100 State-administered program—Class II wells.

The UIC program for Class II wells in the State of South Dakota, except those on Indian lands, is the program administered by the South Dakota Department of Water and Natural Resources, approved by EPA pursuant to section 1425 of the SDWA. Notice of this approval was published in the FEDERAL REGISTER on October 24, 1984; the effective date of this program is December 7, 1984. This program consists of the following elements, as submitted to EPA in the State's program application.

(a) *Incorporation by reference.* The requirements set forth in the State statutes and regulations cited in this paragraph are hereby incorporated by reference and made a part of the applicable UIC program under the SDWA for the State of South Dakota. This incorporation by reference was approved by the Director of the Federal Register effective December 7, 1984.

(1) South Dakota Codified Laws, sections 45–9–2, 45–9–4, 45–9–11, 45–9–13, 45–9–14, 45–9–15 (1983).

(2) Administrative Rules of South Dakota, sections 74:10:02 through 74:10:07, 74:10:09, and 74:10:11 published by the South Dakota Code Commission, as revised through October 4, 1987.

(b) *Other laws.* The following statutes and regulations, although not incorporated by reference, also are part of the approved State-administered program:

(1) South Dakota Codified Laws, Chapter 45–9 (sections not cited above) (1983); 1–26 (1981).

(c)(1) The Memorandum of Agreement between EPA Region VIII and the South Dakota Department of Water and Natural Resources, signed by the EPA Regional Administrator on July 18, 1984.

(d) *Statement of legal authority.* (1) ''Underground Injection Control Program for Class II Wells: Attorney General's Statement,'' signed by Mark V. Meierhery, Attorney General, South Dakota, on January 16, 1984.

(e) The Program Description and any other materials submitted as part of the original application or as supplements thereto.

[50 FR 7061, Feb. 20, 1985, as amended at 56 FR 9419, Mar. 6, 1991]

§ 147.2101 EPA-administered program—Class I, III, IV and V wells and all wells on Indian lands.

(a) *Contents.* The UIC program for all Class I, III, IV, and V wells, including those on Indian lands, and for Class II wells on Indian lands in the state of South Dakota is administered by EPA. This program consists of the UIC program requirements of 40 CFR parts 124, 144, 146, 148, and any additional requirements set forth in the remainder of this subpart. Injection well owners and operators, and EPA shall comply with these requirements.

(b) *Effective date.* The effective date of the UIC program for Class I, III, IV and V wells on all lands in South Dakota, including Indian lands, and for Class II wells on Indian lands only, is December 30, 1984.

[52 FR 17682, May 11, 1987, as amended at 56 FR 9419, Mar. 6, 1991]

§ 147.2102 Aquifer exemptions.

(a) This section identifies any aquifers or their portions exempted in accordance with §§144.7(b) and 146.4 of this chapter at the time of program promulgation. EPA may in the future exempt other aquifers or their portions, according to applicable procedures, without codifying such exemptions in this section. An updated list of exemptions will be maintained in the Regional office.

(b) Those portions of all aquifers located on Indian Lands, which meet the definition of USDW and into which existing Class II wells are injecting, are exempted within a ¼ mile radius of the

well for the purpose of Class II injection activities only.

[49 FR 45308, Nov. 15, 1984]

§ 147.2103 Existing Class II enhanced recovery and hydrocarbon storage wells authorized by rule.

(a) *Maximum injection pressure.* (1) To meet the operating requirements of § 144.28(f)(3)(ii) (A) and (B) of this chapter, the owner or operator:

(i) Shall use an injection pressure no greater than the pressure established by the Regional Administrator for the field or formation in which the well is located. The Regional Administrator shall establish such a maximum pressure after notice, opportunity for comments, and opportunity for a public hearings, according to the provisions of part 124, subpart A of this chapter, and will inform owners and operators in writing of the applicable maximum pressure; or

(ii) May inject at a pressure greater than those specified in paragraph (a)(1)(i) of this section for the field or formation in which he is operating provided he submits a request in writing to the Regional Administrator, and demonstrates to the satisfaction of the Regional Administrator that such injection pressure will not violate the requirement of § 144.28(f)(3)(ii)(A) and (B). The Regional Administrator may grant such a request after notice, opportunity for comment, and opportunity for a public hearing, according to the provisions of part 124, subpart A of this chapter.

(2) Prior to such time as the Regional Administrator establishes field rules for maximum injection pressure based on data provided pursuant to paragraph (a)(2)(ii) of this section the owner or operator shall:

(i) Limit injection pressure to a value which will not exceed the operating requirements of § 144.28(f)(3)(ii); and

(ii) Submit to the Regional Administrator data acceptable to the Regional administrator which defines the fracture pressure of the formation in which injection is taking place. A single test may be submitted on behalf of two or more operators conducting operations in the same formation, if the Regional Administrator approves such submission.

(b) *Casing and cementing.* Where the Regional Administrator determines that the owner or operator of an existing enhanced recovery or hydrocarbon storage well may not be in compliance with the requirement of §§ 144.28(e) and 146.22, the owner or operator shall when required by the Regional Administrator:

(1) Protect USDWs by:

(i) Cementing surface casing by recirculating the cement to the surface from a point 50 feet below the lowermost USDW; or

(ii) Isolating all USDWs by placing cement between the outermost casing and the well bore; and

(2) Isolate any injection zones by placing sufficient cement to fill the calculated space between the casing and the well bore to a point 250 feet above the injection zone; and

(3) Use cement:

(i) Of sufficient quantity and quality to withstand the maximum operation pressure;

(ii) Which is resistant to deterioration from formation and injection fluids; and

(iii) In a quantity no less than 120% of the calculated volume necessary to cement off a zone; and/or

(4) Comply with other requirements which the Regional Administrator may specify in addition to or in lieu of the requirements set forth in paragraphs (b) (1) through (3) of this section as needed to protect USDWs.

[49 FR 45308, Nov. 15, 1984]

§ 147.2104 Requirements for all wells.

(a) The owner or operator converting an existing well to an injection well shall check the condition of the casing with one of the following logging tools;

(1) A pipe analysis log; or

(2) A caliper log.

(b) The owner or operator of a new injection well cased with plastic (PVC, ABS, or others) casings shall:

(1) Not construct a well deeper than 500 feet;

(2) Use cement and additives compatible with such casing material; and

(3) Cement the annular space above the injection intermal from the bottom of the blank casing to the surface.

(c) The owner or operator of a newly drilled well shall install centralizers as directed by the Regional Administrator.

(d) The owner or operator shall as required by the Regional Administrator:

(1) Protect USDWs by:

(i) Setting surface casing 50 feet below the lowermost USDW;

(ii) Cementing surface casing by recirculating the cement to the surface from a point 50 feet below the lowermost USDW; or

(iii) Isolating all USDWs by placing cement between the outermost casing and the well bore; and

(2) Isolate any injection zones by placing sufficient cement to fill the calculated space between the casing and the well bore to a point 250 feet above the injection zone; and

(3) Use cement:

(i) Of sufficient quantity and quality to withstand the maximum operating pressure; and

(ii) Which is resistant to deterioration from formation and injection fluids; and

(iii) In a quantity no less than 120% of the calculated volume necessary to cement off a zone.

(4) The Regional Administrator may approve alternate casing and cementing practices provided that the owner or operator demonstrates that such practices will adequately protect USDWs.

(e) *Area of review*. Notwithstanding the alternatives presented in §146.6 of this chapter, the area of review shall be a fixed radius as described in §146.6(b) of this chapter.

(f) The applicant must give separate notice of intent to apply for a permit to each owner of record of the land within one-quarter mile of the site. The addresses of those to whom notice is given and the description of how notice was given shall be submitted with the permit application. The notice shall include:

(1) The name and address of applicant;

(2) A brief description of the planned injection activities, including well location, name and depth of the injection zone, maximum injection pressure and volume, and fluid to be injected;

(3) The EPA contact person; and

(4) A statement that opportunity to comment will be announced after EPA prepares a draft permit.

This requirement may be waived by the Regional Administrator if he determines that individual notice to all land owners of record would be impractical.

[49 FR 45308, Nov. 15, 1984]

Subpart RR—Tennessee

§ 147.2150 State-administered program—Class I, II, III, IV, and V wells.

The UIC program for Class I, II, III, IV, and V wells in the State of Tennessee, except for those on any Indian lands, is the program administered by the Tennessee Department of Environment and Conservation, approved by EPA pursuant to section 1422 of the SDWA. Notice of this approval was published in the FEDERAL REGISTER on April 6, 2015; the effective date of this program is July 6, 2015. This program consists of the following elements, as submitted to EPA in the state's program application.

(a) *Incorporation by reference*. The requirements set forth in the Tennessee State statutes and regulations cited in the binder (Volumes 1 and 2) entitled ''EPA-Approved State of Tennessee Safe Drinking Water Act section 1422 Underground Injection Control (UIC) Program Statutes and Regulations for Well Classes I, II, III, IV, and V,'' dated September 2013 and Table 1 to paragraph (a) of this section are hereby incorporated by reference and made a part of the applicable UIC program under the SDWA for the State of Tennessee. This incorporation by reference was approved by the Director of the Federal Register in accordance with 5 U.S.C. 552(a) and 1 CFR part 51. Copies of the Tennessee regulations may be obtained or inspected at Tennessee Department of Environment and Conservation, 6th Floor, 401 Church Street, Nashville, Tennessee 32743, (315) 532–0191, at the Environmental Protection Agency, Region 4, 61 Forsyth Street, SW., Atlanta, Georgia 30303–8960, (404) 562–8190 or at the National Archives and Records Administration (NARA). For information on availability of this material at NARA, call (202) 741–6030,

or go to: *http://www.archives.gov/locations/*.

TABLE 1 TO PARAGRAPH (a) EPA-APPROVED TENNESSEE SDWA SECTION 1422 UNDERGROUND INJECTION CONTROL PROGRAM STATUTES AND REGULATIONS FOR WELL CLASSES I, II, III, IV, AND V

State citation	Title/subject	State effective date	EPA approval date [1]
Tennessee Code Annotated, Title 4, Chapter 5.	Uniform Administrative Procedures Act.	August 5, 2011	4/6/15, 80 FR 18318.
Tennessee Code Annotated, Title 68, Chapter 221, Part 4.	Subsurface Sewage Disposal Systems.	August 5, 2011	4/6/15, 80 FR 18318.
Tennessee Code Annotated, Title 68, Chapter 221, Part 7.	Tennessee Safe Drinking Water Act of 1983.	July 9, 2012	4/6/15, 80 FR 18318.
Tennessee Code Annotated, Title 68, Chapter 212, Section 101 *et seq.*	Hazardous Waste Management Act of 1977.	July 9, 2012	4/6/15, 80 FR 18318.
Tennessee Code Annotated, Title 68, Chapter 212, Section 201 *et seq.*	Hazardous Waste Management Act of 1983.	July 9, 2012	4/6/15, 80 FR 18318.
Tennessee Code Annotated, Title 68, Chapter 203.	Tennessee Environmental Protection Fund.	May 10, 2012	4/6/15, 80 FR 18318.
Tennessee Code Annotated, Title 68, Chapter 211, Part 1.	Tennessee Solid Waste Disposal Act.	June 25, 2009	4/6/15, 80 FR 18318.
Tennessee Code Annotated, Title 68, Chapter 215, Part 1.	Tennessee Petroleum Underground Storage Tank Act.	June 29, 2009	4/6/15, 80 FR 18318.
Tennessee Code Annotated, Title 69, Chapter 3, Part 1.	Water Quality Control Act	October 1, 2012	4/6/15, 80 FR 18318.
Official Compilation Rules & Regulations of the State of Tennessee Chapter 0400–45–06.	Underground Injection Control.	December 11, 2012	4/6/15, 80 FR 18318.
Official Compilation Rules & Regulations of the State of Tennessee Chapter 0400–45–01.	Public Water Systems	December 11, 2012	4/6/15, 80 FR 18318.
Compilation Rules & Regulations of the State of Tennessee Chapter 1200–1–6.	Regulations to Govern Subsurface Sewage Disposal Systems.	November 24, 2009	4/6/15, 80 FR 18318.
Official Compilation Rules & Regulations of the State of Tennessee Chapter 0400–12–01–.02(1)(c).	Hazardous Waste Management.	September 20, 2012	4/6/15, 80 FR 18318.
Official Compilation Rules & Regulations of the State of Tennessee Chapter 0400–20–05–.161.	Standards For Protection Against Radiation.	May 22, 2012	4/6/15, 80 FR 18318.

[1] In order to determine the EPA effective date for a specific provision listed in this table, consult the FEDERAL REGISTER document cited in this column for the particular provision.

(b) *Memorandum of Agreement (MOA)*. The MOA between EPA Region 4 and the Tennessee Department of Environment and Conservation signed by EPA Regional Administrator on October 20, 2004.

(c) *Statements of legal authority*. ''Underground Injection Control Program, Attorney General's Statement,'' signed by Attorney General of Tennessee on July 26, 2005 and ''Updating the Attorney General's Statement on UIC Program Authority,'' signed by General Counsel of the Tennessee Department of Environment and Conservation on November 10, 2011.

(d) *Program description*. The Program Description submitted as part of Tennessee's application, and any other materials submitted as part of this application or as a supplement thereto.

[80 FR 18318, Apr. 6, 2015]

§ 147.2151 EPA-administered program Class IV and Indian lands.

(a) *Contents*. The UIC program for Class VI wells and all wells on Indian

lands in the State of Tennessee is administered by EPA. This program consists of the UIC program requirements of 40 CFR parts 124, 144, 146, 148, and any additional requirements set forth in the remainder of this subpart. Injection well owners and operators, and EPA shall comply with these requirements.

(b) *Effective dates.* Effective date for the UIC program on Indian lands is November 25, 1988. The effective date for the UIC program for the rest of Tennessee is June 25, 1984.

[53 FR 43090, Oct. 25, 1988, as amended at 56 FR 9419, Mar. 6, 1991; 80 FR 18319, Apr. 6, 2015]

§ 147.2152 Aquifer exemptions. [Reserved]

§ 147.2153 Existing Class I, II (except enhanced recovery and hydrocarbon storage) and III wells authorized by rule.

Maximum injection pressure. The owner or operator shall limit injection pressure to the lesser of:

(a) A value which will not exceed the operating requirements of § 144.28(f)(3)(i) or (ii) as applicable or

(b) A value for well head pressure calculated by using the following formula:

$$Pm = (0.600 - 0.433\ Sg)d$$

where:

Pm = injection pressure at the well head in pounds per square inch
Sg = specific gravity of inject fluid (unitless)
d = injection depth in feet.

Subpart SS—Texas

§ 147.2200 State-administered program—Class I, III, IV, and V wells.

The UIC program for Class I, III, IV, and V wells in the State of Texas, except for those wells on Indian lands, Class III brine mining wells, and certain Class V wells, is the program administered by the Texas Commission on Environmental Quality approved by EPA pursuant to section 1422 of the Safe Drinking Water Act (SDWA). Notice of the original approval for Class I, III, IV, and V wells was published in the FEDERAL REGISTER on January 6, 1982 and became effective February 7, 1982. Class V geothermal wells and wells for the *in situ* combustion of coal are regulated by the Rail Road Commission of Texas under a separate UIC program approved by EPA and published in the FEDERAL REGISTER on April 23, 1982. A subsequent program revision application for Class I, III, IV, and V wells, not including Class III brine mining wells, was approved by the EPA pursuant to section 1422 of SDWA. Notice of this approval was published in the FEDERAL REGISTER on February 25, 2004; the effective date of these programs is March 26, 2004. The program for Class I, III, IV, and V wells, not including Class III brine mining wells, consists of the following elements as submitted to the EPA in the State's revised program applications. The UIC program for Class III brine mining wells in the State of Texas, except for those wells on Indian lands, is the program administered by the Railroad Commission of Texas. A program revision application for Class III brine mining wells was submitted by Texas and approved by EPA. Notice of that approval was published in the FEDERAL REGISTER on February 26, 2004; the effective date of this program is March 29, 2004.

(a) *Incorporation by reference.* The requirements set forth in the State statutes and regulations cited in this paragraph are hereby incorporated by reference and made part of the applicable UIC program under SDWA for the State of Texas. This incorporation by reference was approved by the Director of the Federal Register in accordance with 5 U.S.C. 552(a) and 1 CFR part 51. Copies of the materials that are incorporated by reference in this paragraph are available at EPA Region VI, 1201 Elm Street, Suite 500, Dallas, Texas 75270–2102 or from the National Archives and Records Administration (NARA). If you wish to obtain material from the EPA Regional Office, please call (800) 887–6063 or (214) 665–2760. For information on the availability of this material at NARA, email *fedreg.legal@nara.gov*, or go to: *www.archives.gov/federal-register/cfr/ibr-locations.html*.

(1) Texas Statutory and Regulatory Requirements Applicable to the Underground Injection Control Program for Class I, III, IV, and V Wells, except for Class III Brine Mining Wells, March 2002.

(2) Texas Statutory and Regulatory Requirements Applicable to the Underground Injection Control Program for Class III Brine Mining Wells, March 2002.

(b) *Other laws*. The following statutes and regulations, as effective on March 31, 2002, although not incorporated by reference except for any provisions identified in paragraph (a) of this section, are also part of the approved State-administered UIC program.

(1) *Class I, III, IV, and V wells*. (i) Title 30 of the Texas Administrative Code Chapters 39, 50, 55, 80, and 281.

(ii) Vernon's Texas Codes Annotated, Water Code, Chapters 5, 7, 26, and 32, Health and Safety Code Section 361, Government Code (ORA) Chapter 552 and Government Code (APA) Chapter 2001.

(2) *Class III brine mining wells*. (i) Vernon's Texas Codes Annotated, Natural Resources Code, Chapters 91, 2001, and 331;

(ii) Vernon's Texas Codes Annotated, Government Code Title 10, Chapters 2001, 552, and 311.

(iii) General Rules of Practice and Procedure before the Railroad Commission of Texas.

(c) *Memorandum of Agreement*—(1) *Class I, III, IV, and V wells*. The Memorandum of Agreement between EPA Region VI and the Texas Natural Resource Conservation Commission a predecessor to the Texas Commission on Environmental Quality (TCEQ), revised March 23, 1999, and signed by the EPA Regional Administrator on October 23, 2001.

(2) *Class III brine mining wells*. The Memorandum of Agreement between EPA Region VI and the Railroad Commission of Texas signed by the EPA Regional Administrator on October 23, 2001.

(d) *Statement of legal authority*—(1) *Class I, III, IV, and V wells*. ''State of Texas Office of Attorney General Statement for Class I, III, IV, and V Underground Injections Wells,'' signed by the Attorney General of Texas, June 30, 1998.

(2) *Class III brine mining wells*. State of Texas ''Attorney General's Statement'' for Class III Brine Mining Injection Wells, signed by the Attorney General of Texas, February 2, 1992 and the ''Supplement to Attorney General's Statement of February 19, 1992,'' signed by the Attorney General of Texas, June 2, 1998.

(e) *Program Description*—(1) *Class I, III, IV, and V wells*. The Program Description and any other materials submitted as part of the revision application or as supplements thereto.

(2) *Class III brine mining wells*. The Program Description and any other materials submitted as part of the revision application or as supplements thereto.

[69 FR 8568, Feb. 25, 2004, as amended at 69 FR 8828, Feb. 26, 2004; 84 FR 44230, Aug. 23, 2019]

§ 147.2201 State-administered program—Class II wells.

The UIC program for Class II wells in the State of Texas, except for those wells on Indian lands, is the program administered by the Railroad Commission of Texas, approved by EPA pursuant to section 1425 of the SDWA. Notice of this approval was published in the FEDERAL REGISTER on April 23, 1982 (47 FR 17488). The effective date of this program was May 23, 1982. This program consists of the following elements, as submitted to EPA in the State's program application:

(a) *Incorporation by reference*. The requirements set forth in the State statutes and regulations cited in this paragraph are hereby incorporated by reference and made a part of the applicable UIC program under the SDWA for the State of Texas. This incorporation by reference was approved by the Director of the Federal Register on June 25, 1984.

(1) Injection Well Act, Texas Water Code Annotated sections 27.031 and 27.033 (Vernon Supp. 1984);

(2) Texas Natural Resources Code Annotated sections 85.041, 85.045, 85.046 and 85.052 (Vernon 1978 and Supp. 1982);

(3) Rules Having Statewide General Application to Oil, Gas, and Geothermal Resource Operations, sections .051.02.02.000 to .051.02.02.080 (Railroad Commission of Texas, Oil and Gas Division, Revised 12–22–81), amended as follows:

(i) Amendment to 16 TAC section 3.9 (section .051.02.02.009) issued December 21, 1981, effective April 1, 1982;

(ii) Amendment to 16 TAC section 3.46 (section .051.02.02.046) issued December 21, 1981, effective April 1, 1982.

(iii) Amendment to 16 TAC section 3.71 (section .051.02.02.074) issued December 21, 1981, effective April 1, 1982.

(b) *Other laws*. The following statutes and regulations, although not incorporated by reference, are also part of the approved State-administered UIC program:

(1) Texas Water Code, Chapters 26, 27 and 29 (Vernon 1972 and Supp. 1982);

(2) Texas Natural Resources Code, Chapters 81, 85–89, 91 and 141 (Vernon 1978 and Supp. 1982);

(3) General Rules of Practice and Procedure, Subchapters A-J (Railroad Commission of Texas, adopted November 24, 1975, revised December 1980).

(c)(1) The Memorandum of Agreement between EPA Region VI and the Railroad Commission of Texas, signed by the EPA Regional Administrator on March 24, 1982.

(2) Letter from Director of Underground Injection Control, Railroad Commission of Texas, to Chief, Ground Water Protection Section, EPA Region VI, ''Re: Letter of Clarification—UIC Program Application,'' March 21, 1982.

(d) *Statement of legal authority*. ''Statement of Legal Authority of the Railroad Commission of Texas to conduct the Underground Injection Control Program,'' signed by Special Counsel, Railroad Commission of Texas, as submitted with ''State of Texas Underground Injection Control Program Application for Primacy Enforcement Authority,'' prepared by the Railroad Commission of Texas, January 15, 1982.

(e) The Program Description and any other materials submitted as part of the application or as supplements thereto.

[49 FR 20197, May 11, 1984, as amended at 53 FR 43091, Oct. 25, 1988]

§ 147.2205 EPA-administered program—Indian lands.

(a) *Contents*. The UIC program for all classes of wells on Indian lands in the State of Texas is administered by EPA. This program consists of the UIC program requirements of 40 CFR parts 124, 144, 146, 148, and any additional requirements set forth in the remainder of this subpart. Injection well owners and operators, and EPA shall comply with these requirements.

(b) *Effective date*. The effective date for the Indian lands program for the State of Texas is November 25, 1988.

[53 FR 43091, Oct. 25, 1988, as amended at 56 FR 9419, Mar. 6, 1991]

Subpart TT—Utah

§ 147.2250 State-administered program—Class I, III, IV, and V wells.

The UIC program for Class I, III, IV, and V wells in the State of Utah, except those on Indian lands, is administered by the Utah Department of Health, Division of Environmental Health, approved by EPA pursuant to Section 1422 of the SDWA. Notice of this approval was published in the FEDERAL REGISTER on January 9, 1983 (47 FR 2321). The effective date of this program is February 10, 1983. Changes to Utah's regulations for Class I wells were made on May 15, 1990, in response to modification of national rules as promulgated by 53 FR 28188, July 26, 1988. Utah's rules were effective July 20, 1990. The revised rules, Program Description, Attorney General's statement, and Memorandum of Agreement were approved as a minor program modification on October 3, 1990. This program consists of the following elements as submitted to EPA:

(a) *Incorporation by reference*. The requirements set forth in the State statutes and regulations cited in this paragraph are hereby incorporated by reference and made a part of the applicable UIC program under the SDWA for the State of Utah. This incorporation by reference was approved by the Director of the Federal Register on June 25, 1984.

(1) Utah Water Pollution Control Act, Utah Code Annotated, Title 26, Chapter 11, Sections 2, 8, and 10 (1989);

(2) Underground Injection Control Regulations; Utah Administrative Code, Section R448–7 (effective as of January 2, 1990);

(3) Underground Injection Control Program (adopted January 20, 1982 and revised effective July 20, 1990) (Officially submitted to EPA by the Executive Secretary of Utah Water Pollution Control Committee on August 16, 1990).

(b) *Other laws*. The following statutes and regulations, although not incorporated by reference except for selected sections identified in paragraph (a) of this section, are also part of the approved State-administered program:

(1) Utah Pollution Control Act, Utah Code Annotated, Sections 26–11–1 through –20 (Supp. 1990);

(c)(1) The revised Memorandum of Agreement between EPA, Region VIII and the Utah Department of Health, Division of Environmental Health, signed by the Regional Administrator on October 3, 1990.

(2) Letter from Director, Utah Department of Health, Division of Environmental Health, Bureau of Water Pollution Control, to EPA Region VIII, Re: Underground Injection Control Program—Utah, March 15, 1982;

(3) Letter from the Executive Secretary of the Utah Water Pollution Control Committee to EPA Region VIII, ''Re: Utah UIC Class I Well Program Changes,'' August 16, 1990;

(d) *Statement of legal authority*. (1) ''Underground Injection Control Program—Attorney General's statement,'' signed by Attorney General, State of Utah, January, 1982;

(2) Letter from Assistant Attorney General of Utah to Chief, Drinking Water Branch, EPA Region VIII, June 18, 1982;

(3) Addendum to Underground Injection Control Program, Attorney General's Statement signed by Attorney General of Utah, August 10, 1990.

(e) The Program Description (revised June 19, 1990) and any other materials submitted as part of the application or supplements thereto.

[56 FR 9419, Mar. 6, 1991]

§ 147.2251 State-administered program—Class II wells.

The UIC program for Class II wells in the State of Utah, except those on Indian lands, is the program administered by the Utah Department of Natural Resources, Division of Oil, Gas, and Mining, approved by EPA pursuant to section 1425 of the SDWA. Notice of this approval was published in the FEDERAL REGISTER on October 8, 1982 (47 FR 44561); the effective date of this program is November 7, 1982. This program consists of the following elements, as submitted to EPA in the State's program application:

(a) *Incorporation by reference*. The requirements set forth in the State statutes and regulations cited in this paragraph are hereby incorporated by reference and made a part of the applicable UIC program under the SDWA for the State of Utah. This incorporation by reference was approved by the Director of the Federal Register on June 25, 1984.

(1) Utah Code Annotated, 1953, section 40–6–1 through 40–6–18, as amended 1988 and Cumm. Supp. 1990;

(2) The Oil and Gas Conservation General Rules, adopted under the authority of the Oil and Gas Conservation Act, 40–6–1 *et seq.*, Utah Code Annotated, as amended 1988 (revised March 1989), rules R615–1 through R615–4, and R615–8 through R615–10.

(b) *Other laws*. [Reserved]

(c)(1) The Memorandum of Agreement between EPA, Region VIII and the Utah Department of Natural Resources, Division of Oil, Gas, and Mining and the Board of Oil, Gas and Mining, signed by the EPA Regional Administrator on July 19, 1983;

(2) Letter from Director, Division of Oil, Gas and Mining, Utah Department of Natural Resources and Energy, to Regional Administrator, EPA Region VIII, ''Re: Aquifer Exemption Process,'' June 16, 1982;

(3) ''Memorandum of Understanding'' between Utah Department of Health and Utah Department of Natural Resources, dated March 5, 1981;

(4) ''Second Addition to Agreement between the Department of Health and the Department of Natural Resources and Energy,'' dated December 15, 1981.

(d) *Statement of legal authority*. (1) Part III of ''Primacy Application—Class II Underground Injection Wells,'' consisting of ''Synopsis of Pertinent Statutes and Regulations,'' ''Statement of Legal Authority,'' and ''Certification by the Attorney General,'' by Assistant Attorney General, Department of Natural Resources and Energy, dated December 18, 1981;

(2) Letter from Assistant Attorney General, State of Utah, to EPA Region VIII, undated, received in the EPA Office of Regional Counsel June 10, 1982.

(3) Memorandum to Director, Division of Oil, Gas and Mining from Assistant Attorney General regarding Underground Injection Control Program, January 8, 1985.

(e) The Program Description and any other materials submitted as part of the application or amendments thereto.

[49 FR 20197, May 11, 1984, as amended at 53 FR 43091, Oct. 25, 1988; 56 FR 9420, Mar. 6, 1991]

§ 147.2253 EPA-administered program—Indian lands.

(a) *Contents.* The UIC program for all classes of wells on Indian lands in the State of Utah, except for Class II wells on Navajo Indian lands for which EPA has granted the Navajo Nation primacy for the SDWA Class II UIC program (as defined in § 147.3400), is administered by EPA. The program for wells on Navajo Indian lands, except for Class II wells on Navajo Indian lands for which EPA has granted the Navajo Nation primacy for the SDWA Class II UIC program, and for Ute Mountain Ute consists of the requirements set forth at subpart HHH of this part. The program for all other wells on Indian lands consists of the UIC program requirements of 40 CFR parts 124, 144, 146, 148, and any additional requirements set forth in the remainder of this subpart. Injection well owners and operators, and EPA shall comply with these requirements.

(b) *Effective date.* The effective date for this program for all other Indian lands in Utah, except for Class II wells on Navajo Indian lands for which EPA has granted the Navajo Nation primacy for the SDWA Class II UIC program (as defined in § 147.3400), is November 25, 1988.

[53 FR 40391, Oct. 25, 1988, as amended at 56 FR 9420, Mar. 6, 1991; 73 FR 65565, Nov. 4, 2008]

Subpart UU—Vermont

§ 147.2300 State-administered program.

The UIC program for all classes of wells in the State of Vermont, except those wells on Indian lands, is the program administered by the Vermont Department of Environmental Conservation, approved by EPA pursuant to section 1422 of the SDWA. Notice of this approval was published in the FR on June 22, 1984; the effective date of this program is July 6, 1984. This program consists of the following elements:

(a) *Incorporation by reference.* The requirements set forth in the State statutes and regulations cited in this paragraph are hereby incorporated by reference and made a part of the applicable UIC program under the SDWA for the State of Vermont. This incorporation by reference was approved by the Director of the Federal Register July 6, 1984.

(1) Vt. Stat. Ann. tit. 10, sections 1251, 1259, 1263 (1973 and Supp. 1981), Effective date: July 1, 1982.

(2) Vermont Department of Water Resources and Environmental Engineering, Chapter 13 Water Pollution Control Regulations, Subchapter 13.UIC—Underground Injection Control, Discharges to Injection Wells, Effective Date: June 21, 1984.

(b) *Other laws.* The following statutes and regulations although not incorporated by reference, also are part of the approved State-administered program:

(1) Vt. Stat. Ann. tit. 10, sections 1251 through 1283 (1973 and Supp. 1981).

(2) Vt. Stat. Ann. tit. 10, sections 901 through 911 (1973 and Supp. 1981).

(3) Vt. Stat. Ann. tit. 3, sections 801 through 847 (1973 and Supp. 1981).

(c)(1) The Memorandum of Agreement between EPA Region I and the Vermont Agency of Environmental Conservation signed by the EPA Regional Administrator on January 16, 1984.

(d) *Statement of legal authority.* (1) ''Vermont Attorney General's Statement for Classes I, II, III, IV and V Injection Wells,'' signed by Attorney General John J. Easton, Jr., as submitted with Vermont Application for Primary Enforcement Responsibility to Administer the Underground Water Source Protection Program Pursuant to the Safe Drinking Water Act and 40 CFR 145.21 through 145.24 (December 20, 1983).

(e) The Program Description and any other materials submitted as part of

the original application or as supplements thereto.

(42 U.S.C. 300)

[49 FR 25634, June 22, 1984, as amended at 53 FR 43091, Oct. 25, 1988; 56 FR 9420, Mar. 6, 1991]

§§ 147.2301–147.2302 [Reserved]

§ 147.2303 EPA-administered program—Indian lands.

(a) *Contents*. The UIC program for all classes of wells on Indian lands in the State of Vermont is administered by EPA. This program consists of the UIC program requirements of 40 CFR parts 124, 144, 146, 148, and any additional requirements set forth in the remainder of this subpart. Injection well owners and operators, and EPA shall comply with these requirements.

(b) *Effective date*. The effective date of the UIC program for Indian lands in Vermont is November 25, 1988.

[53 FR 43091, Oct. 25, 1988, as amended at 56 FR 9420, Mar. 6, 1991]

§§ 147.2304–147.2349 [Reserved]

Subpart VV—Virginia

§ 147.2350 State-administered program. [Reserved]

§ 147.2351 EPA-administered program.

(a) *Contents*. The UIC program for the State of Virginia, including all Indian lands, is administered by EPA. This program consists of the UIC program requirements of 40 CFR parts 124, 144, 146, 148, and any additional requirements set forth in the remainder of this subpart. Injection well owners and operators, and EPA shall comply with these requirements.

(b) *Effective dates*. The effective date for the UIC program on Indian lands is November 25, 1988. The effective date for the UIC program for the remainder of Virginia is June 25, 1984. (53 FR 43091, October 25, 1988).

[56 FR 9420, Mar. 6, 1991]

§ 147.2352 Aquifer exemptions. [Reserved]

Subpart WW—Washington

§ 147.2400 State-administered program—Class I, II, III, IV, and V wells.

The UIC program for Class I, II, III, IV, and V wells in the State of Washington other than those on Indian lands, is the program administered by the Washington Department of Ecology, approved by EPA pursuant to section 1422 of the SDWA. Notice of this approval was published in the FEDERAL REGISTER on August 9, 1984; the effective date of this program is September 24, 1984. This program consists of the following elements, as submitted to EPA in the State's program application.

(a) *Incorporation by reference*. The requirements set forth in the state statutes and regulations cited in the binder entitled ''EPA-Approved Washington SDWA section 1422 Underground Injection Control Program Statutes and Regulations for Well Classes I, II, III, IV, and V,'' dated January 2014, and Table 1 to paragraph (a) of this section are hereby incorporated by reference and made a part of the applicable UIC program under the SDWA for the State of Washington. The Director of the Federal Register approves this incorporation by reference in accordance with 5 U.S.C. 552(a) and 1 CFR part 51. Copies of the State of Washington regulations that are incorporated by reference in paragraph (a) of this section may be inspected at the U.S. Environmental Protection Agency, Region 10, Library, 10th Floor, 1200 Sixth Avenue, Seattle, Washington 98101; Water Docket, EPA Docket Center (EPA/DC) EPA West, Room 3334, 1301 Constitution Ave. NW., Washington, DC 20460; and the National Archives and Records Administration (NARA). If you wish to obtain materials from the EPA Regional Office, please call (206) 553–1289; for materials from a docket in the EPA Headquarters Library, please call the Water Docket at (202) 566–2426. For information on the availability of this material at NARA, call (202) 741–6030, or go to *http://www.archives.gov/locations/*.

TABLE 1 TO PARAGRAPH (a) EPA-APPROVED WASHINGTON SDWA SECTION 1422 UNDERGROUND INJECTION CONTROL PROGRAM STATUTES AND REGULATIONS FOR WELL CLASSES I, II, III, IV, AND V

State citation	Title/subject	State effective date	EPA approval date [1]
Revised Code of Washington Sections 90.48.010—90.48.906.	Water Pollution Control	February 3, 2006	4/6/15 [*Insert Federal Register Citation*]
Revised Code of Washington Section 43.21A.445	Departments authorized to participate in and administer federal Safe Drinking Water Act—Agreements with other departments.	February 3, 2006	[*Insert the date of publication in the Federal Register*] [*Insert Federal Register Citation*]
Washington Administrative Code Sections 173–218–010—173–218–130.	Underground Injection Control Program	June 19, 2008	4/6/15 [*Insert Federal Register Citation*]
Washington Administrative Code Sections 344–12–001—344–12–295.	Oil and Gas Conservation Committee, General Rules.	June 29, 1988	4/6/15 [*Insert Federal Register Citation*]
Washington Administrative Code Sections 173–160–010—173–160–990.	Minimum Standards for Construction and Maintenance of Wells.	December 19, 2008	4/6/15 [*Insert Federal Register Citation*]

[1] In order to determine the EPA effective date for a specific provision listed in this table, consult the FEDERAL REGISTER document cited in this column for the particular provision.

(b) *Other laws*. The following statutes and regulations although not incorporated by reference, also are part of the approved State-administered program:

(1) Revised Code of Washington, chapter 34.04 (Bureau of National Affairs, 1981 Laws), entitled ''Administrative Procedure act'';

(2) Revised Code of Washington, chapter 43.21A (Bureau of National Affairs, 1980 Laws), entitled ''Department of Ecology,'' as amended by 1983 Washington Laws, Chapter 270;

(3) Revised Code of Washington, chapter 70.105 (Bureau of National Affairs, 1983 Laws), entitled ''Hazardous Waste Disposal'';

(4) Revised Code of Washington, chapter 78.52 (Bureau of National Affairs, 1983 Laws), entitled ''Oil and Gas Conservation'';

(5) Revised Code of Washington, chapter 90.48 (Bureau of National Affairs, 1986 Laws), entitled ''Water Pollution Control.''

(c)(1) The Memorandum of Agreement between EPA Region X and the Washington Department of Ecology, signed by the EPA Regional Administrator on February 15, 2011.

(2) Memorandum of Agreement between the Washington Department of Ecology and Oil and Gas Conservation Committee, Related to the Underground Injection Control Program for the State of Washington, signed March 23, 1984;

(3) Memorandum of Agreement between the Washington Department of Ecology and Washington Department of Natural Resources, Related to the Underground Injection Control Program for the State of Washington, signed March 23, 1984;

(4) Memorandum of Agreement between the Washington Department of Ecology and Department of Social and Health Services, Related to the Underground Injection Control Program for the State of Washington, signed March 23, 1984;

(5) Memorandum of Agreement between the Washington Department of Ecology and the Energy Facility Site Evaluation Council, Related to the Underground Injection Control Program for the State of Washington, signed March 19, 2009.

(d) *Statement of legal authority*. Letter from Attorney General of the State of Washington, by Senior Assistant Attorney General, to Director, Washington State Department of Ecology, ''Re: Underground Injection Control Regulatory Program—Attorney General's Statement,'' February 28, 1984.

(e) The Program Description and any other materials submitted as part of the original application or as supplements thereto.

[49 FR 31876, Aug. 9, 1984, as amended at 56 FR 9420, Mar. 6, 1991; 80 FR 18322, Apr. 6, 2015]

§ 147.2403 EPA-administered program—Indian lands.

(a) *Contents*. The UIC program for all classes of wells on Indian lands in the State of Washington is administered by EPA. This program, for all Indian lands except those of the Colville Tribe, consists of the UIC program requirements of 40 CFR parts 124, 144, 146, 148, and any additional requirements set forth in the remainder of this subpart. Injection well owners and operators, and EPA shall comply with these requirements.

(b) *Effective date*. The effective date for the UIC program for Indian lands in Washington is November 25, 1988.

[53 FR 43091, Oct. 25, 1988, as amended at 56 FR 9420, Mar. 6, 1991]

§ 147.2404 EPA-administered program—Colville Reservation.

(a) The UIC program for the Colville Indian Reservation consists of a prohibition of all Class I, II, III and IV injection wells and of a program administered by EPA for Class V wells. This program consists of the UIC program requirements of 40 CFR part 124, 144 and 146 and any additional requirements set forth in the remainder of this subpart. Injection well owners and EPA shall comply with these requirements. The prohibition on Class I-IV wells is effective November 25, 1988. No owner or operator shall construct, operate, maintain, convert, or conduct any other injection activity thereafter using Class I-IV wells.

(b) Owners and operators of Class I, II, III or IV wells in existence on the effective date of the program shall cease injection immediately. Within 60 days of the effective date of the program,

the owner or operator shall submit a plan and schedule for plugging and abandoning the well for the Director's approval. The owner or operator shall plug and abandon the well according to the approved plan and schedule.

[53 FR 43091, Oct. 25, 1988]

Subpart XX—West Virginia

§§ 147.2450–147.2452 [Reserved]

§ 147.2453 EPA-administered program—Indian lands.

(a) *Contents*. The UIC program for all classes of wells on Indian lands in the State of West Virginia is administered by EPA. This program consists of the UIC program requirements of 40 CFR parts 124, 144, 146, 148, and any additional requirements set forth in the remainder of this subpart. Injection well owners and operators, and EPA shall comply with these requirements.

(b) *Effective date*. The effective date for the UIC program on Indian lands in West Virginia is November 25, 1988.

[53 FR 43092, Oct. 25, 1988, as amended at 56 FR 9420, Mar. 6, 1991]

§§ 147.2454–147.2499 [Reserved]

Subpart YY—Wisconsin

§ 147.2500 State-administered program.

The UIC program for Class I, II, III, IV, and V wells in the State of Wisconsin, other than those on Indian lands as described in § 147.2510, is the program administered by the Wisconsin Department of Natural Resources, approved by EPA pursuant to SDWA section 1422. Notice of this approval was published in the FEDERAL REGISTER on September 30, 1983 (48 FR 44783); the effective date of this program is November 30, 1983. This program consists of a prohibition of all injection wells except heat pump return flow injection wells and may be found in the following elements, as submitted to EPA in the State's program application.

(a) *Incorporation by reference*. The requirements set forth in the State statutes and regulations cited in this paragraph are hereby incorporated by reference and made a part of the applicable UIC program under the SDWA for the State of Wisconsin. This incorporation by reference was approved by the Director of the OFR in accordance with 5 U.S.C. 552(a) and 1 CFR part 51. Copies may be obtained at the Wisconsin Department of Natural Resources, Box 7921, Madison, Wisconsin, 53707. Copies may be inspected at the Environmental Protection Agency, Region V, 77 West Jackson Boulevard, Chicago, Illinois, 60604, or at the National Archives and Records Administration (NARA). For information on the availability of this material at NARA, call 202–741–6030, or go to: *http://www.archives.gov/federal_register/code_of_federal_regulations/ibr_locations.html*.

(1) Wisconsin Statutes Annotated §§ 147.015, 147.02 and 147.04 (West 1974 and Supp. 1983);

(2) Chapter NR 112, Well Construction and Pump Installation, Wisconsin Administrative Code §§ NR 112.03 and 112.20 (October 1981), as amended by Natural Resources Board Order No. WQ–25–82, approved by the Natural Resources Board on August 25, 1982;

(3) Chapter NR 113, Servicing Septic Tanks, Seepage Pits, Grease Traps or Privies, Wisconsin Administrative Code §§ NR 113.07–113.08 (1979), as amended by Natural Resources Board Order No. WQ–25–82, approved by the Wisconsin Natural Resources Board on August 25, 1982;

(4) Chapter NR 181, Hazardous Waste Management, Wisconsin Administrative Code §§ NR 181.04–181.415 (1981), as amended June 1985;

(5) Chapter NR 210, Sewage Treatment Works, Wisconsin Administrative Code § 210.05 Natural Resources Board Order No. WQ–25–82, approved by the Wisconsin Natural Resources Board on August 25, 1982;

(6) Chapter NR 214, Land Application and Disposal of Liquid Industrial Wastes and By-Products, Wisconsin Administrative Code §§ 214.03 and 214.08 (1983).

(b) *Other laws*. The following statutes and regulations, although not incorporated by reference except for select sections identified in paragraph (a) of this section, are also part of the approved State-administered program:

(1) Chapter 144, Water, Sewage, Refuse, Mining and Air Pollution, Wisconsin Statutes Annotated (West 1974 and Supp. 1983);

(2) Chapter 147, Pollution Discharge Elimination, Wisconsin Statutes Annotated (West 1974 and Supp. 1983);

(3) Chapter 162, Pure Drinking Water, Wisconsin Statutes Annotated (West 1974 and Supp. 1983);

(4) Laws of 1981, Chapter 20, § 2038 (Re: heat pump injection);

(5) Wisconsin Statutes 803.09(1) (West 1977) (intervention as of right in civil actions).

(c) *Memorandum of Agreement*. The Memorandum of Agreement between EPA Region V and the Wisconsin Department of Natural Resources, signed by the Regional Administrator on December 6, 1983.

(d) *Statement of legal authority*. (1) ''Attorney General's Statement,'' signed by Attorney General, State of Wisconsin;

(2) Letter from Assistant Attorney General, State of Wisconsin, to EPA Region, ''Re: Amendments to Attorney General's Statement-UIC,'' June 30, 1983.

(e) *Program Description*. The Program Description and other materials submitted as part of the application or as supplements thereto.

[49 FR 45309, Nov. 15, 1984, as amended at 56 FR 9420, Mar. 6, 1991; 56 FR 14150, Apr. 5, 1991; 62 FR 1834, Jan. 14, 1997]

§ 147.2510 EPA-administered program—Indian lands.

(a) *Contents*. The UIC program for Indian lands in the State of Wisconsin is administered by EPA. This program consists of 40 CFR parts 144 and 146 and additional requirements set forth in this section. Injection well owners and operators, and EPA, shall comply with these requirements.

(b) *Requirements*. Notwithstanding the requirements of paragraph (a) of this section for Indian lands in Wisconsin no owner or operator shall construct, operate, maintain, or convert any Class I, II, III, IV or V injection well.

(c) *Effective date*. The effective date of the UIC program requirements for Indian lands in Wisconsin is December 30, 1984.

[49 FR 45309, Nov. 15, 1984]

Subpart ZZ—Wyoming

§ 147.2550 State-administered program—Class I, III, IV and V wells.

The UIC program for Class I, III, IV and V wells in the State of Wyoming, except those on Indian lands is the program administered by the Wyoming Department of Environmental Quality approved by EPA pursuant to section 1422 of the SDWA. Notice of this approval was published in the FEDERAL REGISTER on July 15, 1983 (48 FR 32344); the effective date of this program is August 17, 1983. The program consists of the following elements as submitted to EPA in the State's program application:

(a) *Incorporation by reference*. The requirements set forth in the State statutes and regulations cited in this paragraph are hereby incorporated by reference and made a part of the applicable UIC program under the SDWA for the State of Wyoming. This incorporation by reference was approved by the Director of the Federal Register on June 25, 1984.

(1) Wyoming Environmental Quality Act, Wyoming Statutes sections 35–11–101 through 35–11–115, and 35–11–301 through 35–11–305 (1977 Republished Edition and 1989 Cumm. Supp.);

(2) Water Quality Rules and Regulations, Wyoming Department of Environmental Quality, Chapter III: Regulations for Permit to Construct, Install or Modify Public Facilities Capable or, (sic) Causing or Contributing to Pollution (certified copy, signed December 21, 1983);

(3) Water Quality Rules and Regulations, Wyoming Department of Environmental Quality, Chapter VIII: Quality Standards for Groundwaters of Wyoming (certified copy, signed April 9, 1980);

(4) Water Quality Rules and Regulations, Wyoming Department of Environmental Quality, Chapter IX: Wyoming Groundwater Pollution Control Permit (certified copy, signed April 9, 1980);

(5) Water Quality Rules and Regulations, Wyoming Department of Environmental Quality, Chapter XIII: Prohibitions of Permits for New Hazardous Waste Injection Wells (certified copy, signed August 25, 1989);

(6) Land Quality Rules and Regulations, Wyoming Department of Environmental Quality, Chapter XXI: In Situ Mining (effective March 26, 1981).

(b) *Other laws*. The following statutes and regulations, although not incorporated by reference except for select sections identified in paragraph (a) of this section, are also part of the approved State-administered program:

(1) Article 9, Underground Water, Wyoming Statutes sections 41–3–901 through 41–3–938 (September 1982);

(2) Wyoming Administrative Procedure Act, Wyoming Statutes sections 9–4–101 through 9–4–115 (1988);

(3) Department of Environmental Quality Rules of Practice and Procedure (1982).

(c)(1) The Memorandum of Agreement between EPA, Region VIII and the Wyoming Department of Environmental Quality, signed by the EPA Regional Administrator on April 26, 1983.

(2) Letter from Regional Administrator, EPA Region VIII, to Governor of Wyoming, May 21, 1982, with Attachment (regarding aquifer exemptions);

(3) Letter from Governor of Wyoming to Regional Administrator, EPA Region VIII, ''Re: Underground Injection Control (UIC) Program—Aquifer Exemption Issues,'' June 7, 1982;

(4) Letter from Regional Administrator, EPA Region VIII to Governor of Wyoming, ''Re: Underground Injection Control (UIC) Program—Aquifer Exemption Issues,'' June 25, 1982;

(5) Letter from Director, Wyoming Department of Environmental Quality, to Acting Director, Water Management Division, EPA Region VIII, December 1, 1982.

(d) *Statement of legal authority*. (1) ''Attorney General's Statement—Wyoming Statutory and Regulatory Authority for Assumption of the Underground Injection Control Program Pursuant to the Federal Safe Drinking Water Act,'' signed by Attorney General and Assistant Attorney General for the State of Wyoming, September 22, 1982;

(2) Letter from Attorney General for the State of Wyoming to Acting Regional Counsel, EPA Region VIII, ''Re: Wyoming Assumption of the UIC Program—$36, Chapter IX, Wyoming Water Quality Rules and Regulations,'' November 24, 1982.

(e) The Program Description and any other materials submitted as part of the application or amendment thereto.

[49 FR 20197, May 11, 1984, as amended at 53 FR 43092, Oct. 25, 1988; 56 FR 9421, Mar. 6, 1991]

§ 147.2551 State-administered program—Class II wells.

The UIC program for Class II wells in the State of Wyoming, except those on Indian lands, is the program administered by the Wyoming Oil and Gas Conservation Commission approved by EPA pursuant to section 1425 of the SDWA. Notice of this approval was published in the FR on November 23, 1982 (47 FR 52434); the effective date of this program is December 23, 1982. This program consists of the following elements as submitted to EPA in the State's program application:

(a) *Incorporation by reference*. The requirements set forth in the State statutes and regulations cited in this paragraph are hereby incorporated by reference and made a part of the applicable UIC program under the SDWA for the State of Wyoming. This incorporation by reference was approved by the Director of the OFR in accordance with 5 U.S.C. 552(a) and 1 CFR Part 51. Copies may be obtained at the Wyoming Oil and Gas Conservation Commission, Office of the State Oil and Gas Supervisor, P.O. Box 2640, 77 West First Street, Casper, Wyoming, 82602. Copies may be inspected at the Environmental Protection Agency, Region VIII, 999 18th Street, Suite 500, Denver, Colorado, 80202–2405, or at the National Archives and Records Administration (NARA). For information on the availability of this material at NARA, call 202–741–6030, or go to: *http://www.archives.gov/federal_register/code_of_federal_regulations/ibr_locations.html*.

(1) Rules and Regulations of the Wyoming Oil and Gas Conservation Commission, including Rules of Practice

and Procedure, as published by the Wyoming Oil and Gas Conservation Commission, August 7, 1990;

(2) Title 30, Chapter 5, Wyoming Statutes, sections 30–5–101 through 30–5–126 (June 1983 and Wyoming Statutes Annotated, July 1990 Supp.).

(b) *Memorandum of Agreement.* (1) The initial Memorandum of Agreement between EPA, Region VIII and Wyoming Oil and Gas Conservation Commission, signed by the EPA Regional Administrator and the Oil Field Supervisor of the Commission on June 2, 1982;

(2) Amendment No. 1 to the Memorandum of Agreement, dated December 22, 1982;

(3) Amendment No. 2 to the Memorandum of Agreement, dated January 25, 1990;

(4) Letter from State Oil and Gas Supervisor, Wyoming Oil and Gas Conservation Commission, to the Acting Director, Water Management Division, EPA Region VIII, ''Re: Application for Primacy in the Regulation of Class II Injection Wells,'' March 8, 1982;

(5) Letter from State Oil and Gas Supervisor, Wyoming Oil and Gas Conservation Commission, to EPA Region VIII, ''Re: Regulation of Liquid Hydrocarbon Storage Wells Under the UIC Program,'' July 1, 1982;

(6) Memorandum of Agreement Between the Wyoming State Board of Control, State Engineer, Oil and Gas Conservation Commission, and the Department of Environmental Quality, dated October 14, 1981.

(c) *Statement of legal authority.* (1) ''Statement of Legal Authority'' and ''State Review of Regulations and Statutes Relevant to the UIC Program-Class II Wells,'' signed by Special Assistant Attorney General for the State of Wyoming, as submitted with ''Wyoming Oil and Gas Conservation Commission, Application for Primacy in the Regulation of Class II Injection Wells under Section 1425 of the Safe Drinking Water Act,'' November 1981;

(2) Letter from special Assistant Attorney General for the State of Wyoming to Assistant Regional Counsel, EPA Region VIII, May 13, 1982;

(3) Letter from special Assistant Attorney General for the State of Wyoming to Assistant Regional Counsel, EPA Region VIII, July 1, 1982.

(d) *Program Description.* The Program Description and other material submitted as part of the application or amendments thereto, including the memorandum to the National UIC Branch reporting on Improvement to the Wyoming Oil and Gas 1425 program, dated April 28, 1989.

[56 FR 9421, Mar. 6, 1991]

§ 147.2553 EPA-administered program—Indian lands.

(a) *Contents.* The UIC program for all classes of wells on Indian lands in the State of Wyoming is administered by EPA. This program consists of the UIC program requirements of 40 CFR parts 124, 144, 146, 148, and any additional requirements set forth in the remainder of this subpart. Injection well owners and operators, and EPA shall comply with these requirements.

(b) *Effective date.* The effective date for the UIC program on Indian lands in Wyoming is November 25, 1988.

[53 FR 43092, Oct. 25, 1988, as amended at 56 FR 9422, Mar. 6, 1991]

§ 147.2554 Aquifer exemptions.

In accordance with §§144.7(b) and 146.4 of this chapter, those portions of aquifers currently being used for injection in connection with Class II (oil and gas) injection operations on the Wind River Reservation, which are described below, are hereby exempted for the purpose of Class II injection activity. This exemption applies only to the aquifers tabulated below, and includes those portions of the aquifers defined on the surface by an outer boundary of those quarter-quarter sections dissected by a line drawn parallel to, but one-quarter mile outside, the field boundary, and is restricted to extend no further than one-quarter mile outside the Reservation boundary. Maps showing the exact boundaries of the field may be consulted at the EPA's Region 8 Office, and at the EPA Headquarters in Washington, DC.

AREAS TO BE EXEMPTED FOR THE PURPOSE OF CLASS II INJECTION ON THE WIND RIVER RESERVATION

Formation	Approximate depth	Location
Steamboat Butte Field		
Phosphoria	6,500–7,100	T3N, R1W—W/2 Sec. 4, Sec. 5, E/2 Sec. 6, NE/4 Sec. 8, W/2 Sec. 9. T4N, R1W—W/2 Sec. 29, E/2 Sec. 30, E/2 Sec. 31, Sec. 32.
Tensleep	6,900–7,500	T3N, R1W—W/2 Sec. 4, Sec. 5, E/2 Sec. 6, NE/4 Sec. 8, W/2 Sec. 9. T4N, R1W—W/2 Sec. 29, E/2 Sec. 30, E/2 Sec. 31, Sec. 32.
Winkleman Dome Field		
Tensleep	2,800–3,300	T2N, R1W—SW/4 Sec. 17, Sections 18, 19, 20, 29, NE/4 Sec. 30. T2N, R2W—E/2 Sec. 13, NE/4 Sec. 24.
Phosphoria	2,800–3,600	T2N, R1W—SW/4 Sec. 17, Sections 18, 19, 20, 29, NE/4 Sec. 30. T2N, R2W—E/2 Sec. 13, NE/4 Sec. 24.
Nugget	1,100–1,500	T2N, R1W—SW/4 Sec. 17, Sections 18, 19, 20, 29, NE/4 Sec. 30. T2N, R2W—E/2 Sec. 13, NE/4 Sec. 24.
Lander Field		
Phosphoria	1,100–3,800	T2S, R1E—Sections 12 and 13, E/2 Sec. 24, NE/4 Sec. 25. T2S, R2E—W/2 Sec. 18, W/2 Sec. 19, Sec. 30. T33N, R99W—Sec. 4.
NW Sheldon Field		
Crow Mountain and Cloverly	3,400–3,600	T6N, R3W—SE/4 Sec. 35, SW/4 Sec. 36. T5N, R3W—N/2 Sec. 1.
Circle Ridge Field		
Tensleep	1,500–1,800	T6N, R2W—Sec. 6, N/2 Sec. 7. T7N, R3W—SE/4 Sec. 36. T7N, R2W—SW/4 Sec. 31. T6N, R3W—E/2 Sec. 1.
Phosphoria	800–1,800	T7N, R3W—S/2 Sec. 36. T6N, R3W—NE/4 Sec. 1.
Amsden	700–l,200	T6N, R3W—Sec. 6.
Rolff Lake Field		
Crow Mountain	3,500–3,700	T6N, R3W—SW/4 Sec. 26, NW/4 Sec. 27.

[53 FR 43092, Oct. 25, 1988]

§ 147.2555 Aquifer exemptions since January 1, 1999.

In accordance with § 144.7(b) and § 146.4 of this chapter, the aquifers described in the following table are hereby exempted from the definition of an underground source of drinking water, as defined in 40 CFR 144.3:

AQUIFER EXEMPTIONS SINCE JANUARY 1, 1999

Formation	Approximate depth (feet below ground surface)	Location
Powder River Basin, only approximately 0.4 square miles of the Lance Formation which is less than 0.005% of the Basin at indicated depths and location..	3,800–6,800	Two cylindrical volumes with centers in the wells COGEMA DW No. 1 and 18–3 Christensen respectively, and radius of 1,320 feet. Both wells are located in the Christensen Ranch, in Johnson County, WY. The COGEMA DW No. 1 well is located at approximately 450 feet West of N/S line and 100 feet North of E/W line of SE/4, NW/4, Section 7, T44N, R76W. The 18–3 Christensen well is located approximately 600 feet West of N/S line and 550 South of E/W line of NE/4, NW/4, Section 18, T44N, R76W.

AQUIFER EXEMPTIONS SINCE JANUARY 1, 1999—Continued

Formation	Approximate depth (feet below ground surface)	Location
Lance Formation at indicated depths and locations	3,800–6,500	Two cylindrical volumes with centers in the wells COGEMA DW No. 2 and COGEMA DW No. 3 respectively, and radius of 1320 feet. Both wells are located in the Christensen Ranch, in Johnson County WY. The COGEMA DW No. 2 is located at approximately 2,290 feet from the North line and 1130 feet from the East line SW1/4 SE1/4 NE1/4 of Section 7, Township 44 North, Range 76 West. The COGEMA DW No. 3 is located approximately 3300 feet from the North line and 1340 feet from the West line center of SW1/4 of Section 5, Township 44 North, Range 76 West.

[64 FR 14803, Mar. 26, 1999, as amended at 67 FR 47726, July 22, 2002]

Subpart AAA—Guam

§ 147.2600 State-administered program.

The UIC program for all classes of wells in the territory of Guam, except those on Indian lands, is the program administered by the Guam Environmental Protection Agency, approved by EPA pursuant to SDWA section 1422. Notice of this approval was published in the FEDERAL REGISTER on May 2, 1983 (47 FR 19717); the effective date of this program is June 1, 1983. This program consists of the following elements, as submitted to EPA in the State's program application:

(a) *Incorporation by reference*. The requirements set forth in the State statutes and regulations cited in this paragraph are hereby incorporated by reference and made a part of the applicable UIC program under the SDWA for the territory of Guam. This incorporation by reference was approved by the Director of the Federal Register on June 25, 1984.

(1) Water Resources Conservation Act, Government Code of Guam sections 57021–57025, Public Law 9–31 (March 9, 1967), as amended by Public Law 9–76 (July 29, 1967), as amended by Public Law 12–191 (December 30, 1974);

(2) Water Pollution Control Act, Government Code of Guam sections 57042 and 57045, Public Law 9–76 (July 29, 1967), as amended by Public Law 9–212 (August 5, 1968), as amended by Public Law 10–31 (March 10, 1969), as amended by Public Law 12–191 (December 30, 1974);

(3) Guam Environmental Protection Agency, Underground Injection Control Regulations, Chapters 1–9, as revised by amendments adopted September 24, 1982;

(4) Guam Environmental Protection Agency, Water Quality Standards, Section I-IV (approved September 25, 1981, effective November 16, 1981).

(b) *Other laws*. The following statutes and regulations, although not incorporated by reference except for specific sections identified in paragraph (a) of this section, are also part of the approved State-administered program:

(1) Government Code of Guam, Title XXV, Chapters I-III (sections 24000–24207);

(2) Government Code of Guam, Title LXI, Chapters I-III (sections 57000–57051);

(3) Government Code of Guam, Title LXI, Chapters VI (sections 57120–57142);

(4) Government Code of Guam, Title LXI, Chapters VIII (sections 57170–57188);

(5) Government Code of Guam, Title LXI, Chapters XII (sections 57285–57299);

(c) The Memorandum of Agreement between EPA, Region IX and the Guam Environmental Protection Agency signed by the Regional Administrator on January 14, 1983.

(d) *Statement of legal authority*. (1) Letter from Attorney General of Guam to Regional Administrator, Region IX, ''Re: Attorney General's Statement for

Underground Injection Control Program (UIC), Ground Water Program Guidance #16'' May 12, 1982;

(2) Letter from Attorney General of Guam to Regional Administrator, Region IX, ''Re: Additional comments to be incorporated into the May 12, 1982, Attorney General's Statement for Underground Injection Control Program,'' September 2, 1982.

(e) The Program Description and any other materials submitted as part of the application or amendments thereto.

[49 FR 20197, May 11, 1984, as amended at 53 FR 43092, Oct. 25, 1988]

§ 147.2601 EPA-administered program—Indian lands.

(a) *Contents*. The UIC program for Indian lands in the territory of Guam is administered by EPA. This program consists of the UIC program requirements of 40 CFR parts 124, 144, 146, 148, and any additional requirements set forth in the remainder of this subpart. Injection well owners and operators, and EPA shall comply with these requirements.

(b) *Effective date*. The effective date for the UIC program on Indian lands in the territory of Guam is November 25, 1988.

[53 FR 43093, Oct. 25, 1988, as amended at 56 FR 9422, Mar. 6, 1991]

Subpart BBB—Puerto Rico

§ 147.2650 State-administered program—Class I, II, III, IV, and V wells.

The Underground Injection Control Program for all classes of wells in the Commonwealth of Puerto Rico, other than those on Indian lands, is the program administered by Puerto Rico's Environmental Quality Board (EQB), approved by the EPA pursuant to the Safe Drinking Water Act (SDWA) section 1422. This program consists of the following elements, as submitted to EPA in the Commonwealth's program application.

(a) *Incorporation by reference*. The requirements set forth in the State statutes and regulations cited in this paragraph are hereby incorporated by reference and made a part of the applicable UIC program under the SDWA for the Commonwealth of Puerto Rico. This incorporation by reference was approved by the Director of the Federal Register in accordance with 5 U.S.C. 552(a) and 1 CFR part 51. Copies may be obtained or inspected at the following locations: EPA, Region II, 26 Federal Plaza, room 845, New York, NY 10278; EPA, Headquarters, 401 M St., SW., room E1101A, Washington, DC 20460; or the National Archives and Records Administration (NARA). For information on the availability of this material at NARA, call 202–741–6030, or go to: *http://www.archives.gov/federal_register/code_of_federal_regulations/ibr_locations.html*.

(1) Underground Injection Control Regulations of the Commonwealth of Puerto Rico, Parts I through V and appendices A and B, adopted September 14, 1983 (Amended July 20, 1988).

(2) Puerto Rico Public Policy Environmental Act (PRPPE), Title 12 Laws of Puerto Rico Annotated (LPRA) Chapters 121 and 131, 1977 edition, as amended 1988 edition, and Chapter 122, 1988 edition.

(b) Memorandum of Agreement. The Memorandum of Agreement between EPA Region II and the Commonwealth of Puerto Rico's EQB signed by the Regional Administrator on August 23, 1991.

(c) Statement of legal authority. (1) Attorney General's statement on the Commonwealth of Puerto Rico's Authority to apply for, assume and carry out the UIC Program, dated June 26, 1987. (2) Letter from the Governor of the Commonwealth of Puerto Rico requesting the program, dated July 16, 1987.

(d) Program description. The Description of the Commonwealth of Puerto Rico's Underground Injection Control Program, dated with the effective date October 30, 1986.

[57 FR 33446, July 29, 1992]

§ 147.2651 EPA-administered program—Indian lands.

(a) Contents. The UIC program for all classes of wells on Indian lands in the Commonwealth of Puerto Rico is administered by EPA. This program consists of the UIC program requirements of 40 CFR parts 124, 144, 146, 148 and any

additional requirements set forth in the remainder of this subpart. Injection well owners and operators and EPA shall comply with the requirements.

(b) Effective date. The effective date for the UIC program on Indian Lands in the Commonwealth of Puerto Rico is November 25, 1988.

[57 FR 33446, July 29, 1992]

Subpart CCC—Virgin Islands

§ 147.2700 State-administered program. [Reserved]

§ 147.2701 EPA-administered program.

(a) *Contents*. The UIC program for the Virgin Islands, including all Indian lands, is administered by EPA. This program consists of the UIC program requirements of 40 CFR parts 124, 144, 146, 148, and any additional requirements set forth in the remainder of this subpart. Injection well owners and operators, and EPA shall comply with these requirements.

(b) *Effective dates*. The effective date of the UIC program for non-Indian lands in the Virgin Islands is December 30, 1984. The effective date for Indian lands in the Virgin Islands is November 25, 1988.

[53 FR 43093, Oct. 25, 1988, as amended at 56 FR 9422, Mar. 6, 1991]

Subpart DDD—American Samoa

§ 147.2750 State-administered program. [Reserved]

§ 147.2751 EPA-administered program.

(a) *Contents*. The UIC program for American Samoa, including all Indian lands, is administered by EPA. This program consists of the UIC program requirements of 40 CFR parts 124, 144, 146, 148, and any additional requirements set forth in the remainder of this subpart. Injection well owners and operators, and EPA shall comply with these requirements.

(b) *Effective dates*. The effective date for the UIC program on non-Indian lands is June 25, 1984. The effective date of the UIC program on Indian lands is November 25, 1988.

[53 FR 43093, Oct. 25, 1988, as amended at 56 FR 9422, Mar. 6, 1991]

§ 147.2752 Aquifer exemptions. [Reserved]

Subpart EEE—Commonwealth of the Northern Mariana Islands

§ 147.2800 State-administered program—Class I, II, III, IV, and V wells.

The UIC program for Class I, II, III, IV, and V wells in the Commonwealth of the Northern Mariana Islands, other than those on Indian lands, is the program administered by the Commonwealth of the Northern Mariana Islands Division of Environmental Quality approved by EPA pursuant to Section 1422 of the SDWA. Notice of this approval was published in the FEDERAL REGISTER on January 18, 1985; the effective date of this program is August 30, 1985. This program consists of the following elements, as submitted to EPA in the State's program application.

(a) *Incorporation by reference*. The requirements set forth in the State statutes and regulations cited in this paragraph are hereby incorporated by reference and made a part of the applicable UIC program under the SDWA for the Commonwealth of the Northern Mariana Islands. This incorporation by reference was approved by the Director of the Federal Register effective July 31, 1985.

(1) CNMI Environmental Protection Act, 2 CMC sections 3101, *et seq*. (1984);

(2) CNMI Coastal Resources Management Act, 2 CMC sections 1501, *et seq*. (1984);

(3) CNMI Drinking Water Regulations, Commonwealth Register, Volume 4, Number 4 (August 15, 1982);

(4) CNMI Underground Injection Control Regulations, Commonwealth Register, Volume 6, Number 5 (May 15, 1984, amended November 15, 1984, January 15, 1985);

(5) CNMI Coastal Resources Management Regulations, Commonwealth Register, Volume 6, Number 12, December 17, 1984.

(b)(1) The Memorandum of Agreement between EPA Region IX and the

Commonwealth of the Northern Mariana Islands Division of Environmental Quality, signed by the EPA Regional Administrator on May 3, 1985;

(c) *Statement of legal authority*. Statement from Attorney General Commonwealth of the Northern Mariana Islands, ''Underground Injection Control Program—Attorney General's Statement,'' signed on October 10, 1984.

(d) The Program Description and any other materials submitted as part of the original application or as supplements thereto.

[50 FR 28943, July 17, 1985]

§ 147.2801 EPA-administered program.

(a) *Contents*. The UIC program for Indian lands in the Commonwealth of the Northern Mariana Islands is administered by EPA. This program consists of the UIC program requirements of 40 CFR parts 124, 144, 146, 148, and any additional requirements set forth in the remainder of this subpart. Injection well owners and operators, and EPA shall comply with these requirements.

(b) *Effective date*. The effective date of the UIC program for Indian lands is November 25, 1988.

[53 FR 43093, Oct. 25, 1988, as amended at 56 FR 9422, Mar. 6, 1991]

§ 147.2802 Aquifer exemptions. [Reserved]

Subpart FFF—Trust Territory of the Pacific Islands

§ 147.2850 State-administered program. [Reserved]

§ 147.2851 EPA-administered program.

(a) *Contents*. The UIC program for Trust Territory of the Pacific Islands, including all Indian lands, is administered by EPA. This program consists of the UIC program requirements of 40 CFR parts 124, 144, 146, 148, and any additional requirements set forth in the remainder of this subpart. Injection well owners and operators, and EPA shall comply with these requirements.

(b) *Effective dates*. The effective date of the UIC program for non-Indian lands of the Trust Territory of the Pacific Islands is June 25, 1984. The effective date for the Indian lands is November 25, 1988.

[53 FR 43093, Oct. 25, 1988, as amended at 56 FR 9422, Mar. 6, 1991]

§ 147.2852 Aquifer exemptions. [Reserved]

Subpart GGG—Osage Mineral Reserve—Class II Wells

AUTHORITY: Safe Drinking Water Act, 42 U.S.C. 300h.

SOURCE: 49 FR 45309, Nov. 15, 1984, unless otherwise noted.

§ 147.2901 Applicability and scope.

This subpart sets forth the rules and permitting requirements for the Osage Mineral Reserve, Osage County, Oklahoma, Underground Injection Control Program. The regulations apply to owners and operators of Class II injection wells located on the Reserve, and to EPA.

§ 147.2902 Definitions.

Most of the following terms are defined in § 144.3, and have simply been reproduced here for the convenience of the reader. This section also includes definitions of some terms unique to the Osage program. Terms used in this subpart are defined as follows:

Administrator—the Administrator of the United States Environmental Protection Agency, or an authorized representative.

Aquifer—a geologic formation, group of formations, or part of a formation that is capable of yielding a significant amount of water to a well or spring.

BIA—The ''Bureau of Indian Affairs,'' United States Department of Interior.

Casing—a pipe or tubing of varying diameter and weight, lowered into a borehole during or after drilling in order to support the sides of the hole and, thus, prevent the walls from caving, to prevent loss of drilling mud into porous ground, or to prevent water, gas, or other fluid from entering the hole.

Cementing—the operation whereby a cement slurry is pumped into a drilled hole and/or forced behind the casing.

Class II Wells—wells which inject fluids:

(a) Which are brought to the surface in connection with conventional oil or natural gas production and may be commingled with waste waters from gas plants which are an integral part of production operations, unless those waters would be classified as a hazardous waste at the time of injection;

(b) For enhanced recovery of oil or natural gas; and

(c) For storage of hydrocarbons which are liquid at standard temperature and pressure.

Existing Class II Wells—wells that were authorized by BIA and constructed and completed before the effective date of this program.

New Class II Wells—wells constructed or converted after the effective date of this program, or which are under construction on the effective date of this program.

Confining bed—a body of impermeable or distinctly less permeable material stratigraphically adjacent to one or more aquifers.

Confining zone—a geologic formation, group of formations, or part of a formation that is capable of limiting fluid movement above an injection zone.

Contaminant—any physical, chemical, biological, or radiological substance or matter in water.

Disposal well—a well used for the disposal of waste into a subsurface stratum.

EPA—The United States Environmental Protection Agency.

Fault—a surface or zone of rock fracture along which there has been displacement.

Fluid—material or substance which moves or flows whether in a semisolid, liquid, sludge, gas or any other form or state.

Formation—a body of rock characterized by a degree of lithologic homogeneity which is prevailingly, but not necessarily, tabular and is mappable on the earth's surface or traceable in the subsurface.

Freshwater—''Underground source of drinking water.''

Ground water—water below the land surface in a zone of saturation.

Injection well—a well into which fluids are being injected.

Injection zone—a geological formation, group of formations, or part of a formation receiving fluids through a well.

Lithology—the description of rocks on the basis of their physical and chemical characteristics.

Owner/operator—the owner or operator of any facility or activity subject to regulation under the Osage UIC program.

Packer—a device lowered into a well to produce a fluid-tight seal within the casing.

Permit—an authorization issued by EPA to implement UIC program requirements. Permit does not include the UIC authorization by rule or any permit which has not yet been the subject of final Agency action.

Plugging—the act or process of stopping the flow of water, oil or gas into or out of a formation through a borehole or well penetrating that formation.

Pressure—the total load or force per unit area acting on a surface.

Regional Administrator—the Regional Administrator of Region 6 of the United States Environmental Protection Agency, or an authorized representative.

Subsidence— the lowering of the natural land surface in response to: Earth movements; lowering of fluid pressure; removal of underlying supporting material by mining or solution solids, either artificially or from natural causes; compaction due to wetting (hydrocompaction); oxidation of organic matter in soils; or added load on the land surface.

Underground source of drinking water— an aquifer or its portion:

(a)(1) Which supplies any public water system; or

(2) Which contains a sufficient quantity of ground water to supply a public water system; and

(i) Currently supplies drinking water for human consumption; or

(ii) Contains fewer than 10,000 mg/1 total dissolved solids; and

(b) Which is not an exempted aquifer.

USDW—underground source of drinking water.

Well—a bored, drilled, or driven shaft, or a dug hole whose depth is greater than the largest surface dimension.

Well injection—the subsurfac emplacement of fluids through a bored, drilled,

or driven well; or through a dug well, where the depth of the dug well is greater than the largest surface dimension.

Well workover—any reentry of an injection well; including, but not limited to, the pulling of tubular goods, cementing or casing repairs; and excluding any routine maintenance (e.g. reseating the packer at the same depth, or repairs to surface equipment).

§ 147.2903 Prohibition of unauthorized injection.

(a) Any underground injection, except as authorized by permit or rule issued under the UIC program, is prohibited. The construction or operation of any well required to have a permit is prohibited until the permit has been issued.

(b) No owner or operator shall construct, operate, maintain, convert, plug, or abandon any injection well, or conduct any other injection activity, in a manner that allows the movement of fluid containing any contaminant into underground sources of drinking water, if the presence of that contaminant may cause the violation of any primary drinking water regulation under 40 CFR part 142 or may otherwise adversely affect the health of persons. The applicant for a permit shall have the burden of showing that the requirements of this paragraph are met.

(c) Injection between the outermost casing protecting underground sources of drinking water and the well bore is prohibited.

§ 147.2904 Area of review.

(a) The area of review for an injection well or project will be a fixed radius of one-forth of a mile from the well, field or project.

(b) The zone of endangering influence is the lateral area around the injection well or project in which the injection zone pressures may cause movement of fluid into an underground source of drinking water (USDW) if there are improperly sealed, completed or abandoned wells present. A zone of endangering influence may be determined by EPA through the use of an appropriate formula that addresses the relevant geologic, hydrologic, engineering and operational features of the well, field, or project.

§ 147.2905 Plugging and abandonment.

The owner/operator shall notify the Osage UIC office within 30 days of the date injection has terminated. The well must be plugged within 1 year after termination of injection. The Regional Administrator may extend the time to plug, but only if no fluid movement into a USDW will occur, and the operator has presented a viable plan for utilizing the well within a reasonable time.

(a) Until an injection well has been properly plugged and abandoned, annual reports to the Regional Administrator on well status, and mechanical integrity tests as outlined in §§ 147.2912 and 147.2920 will be required, whether or not injection has ceased.

(b) All wells shall be plugged to prevent movement of fluid into an USDW.

(c) The owner/operator shall notify the Osage UIC office by certified mail at least 5 days prior to the commencement of plugging operations. The Osage UIC office may waive or reduce the 5-day notice requirement when a qualified EPA representative is available to witness the plugging operation. The following information must be submitted as part of the notification:

(1) Type and number of plugs to be used;

(2) Elevation of top and bottom of each plug;

(3) Method of plug placement; and

(4) Type, grade and quantity of cement to be used.

(d) The well shall be kept full of mud as casing is removed. No surface casing shall be removed without written approval from the Regional Administrator.

(e)(1) If surface casing is adequately set and cemented through all freshwater zones (set to at least 50 feet below the base of freshwater), a plug shall be set at least 50 feet below the shoe of the casing and extending at least 50 feet above the shoe of the casing, or

(2) If the surface casing and cementing is inadequate, the well bore shall be filled with cement from a point 50 feet below the base of fresh water to a point 50 feet above the shoe of the surface

casing, and any additional plugs as required by the Osage UIC office and/or the Osage Agency.

(3) In all cases, the top 20 feet of the well bore below 3 feet of ground surface shall be filled with cement. Surface casing shall be cut off 3 feet below ground surface and covered with a secure steel cap on top of the surface pipe. The remaining 3 feet shall be filled with dirt.

(f)(1) Except as provided in paragraph (f)(2) of this section, each producing or receiving formation shall be sealed off with a 50-foot cement plug placed at the base of the formation and a 50–foot cement plug placed at the top of the formation.

(2) The requirement in paragraph (f)(1) of this section does not apply if the producing/receiving formation is already sealed off from the well bore with adequate casing and cementing behind casing, and casing is not to be removed, or the only openings from the producing/receiving formation into the well bore are perforations in the casing, and the annulus between the casing and the outer walls of the well is filled with cement for a distance of 50 feet below the base of the formation and 50 feet above the top of the formation. When such conditions exist, a bridge plug capped with 10 feet of cement set at the top of the producing formation may be used.

(g) When specified by the Osage UIC office, any uncased hole below the shoe of any casing to be left in the well shall be filled with cement to a depth of at least 50 feet below the casing shoe, or the bottom of the hole, and the casing above the shoe shall be filled with cement to at least 50 feet above the shoe of the casing. If the well has a screen or liner which is not to be removed, the well bore shall be filled with cement from the base of the screen or liner to at least 50 feet above the top of the screen or liner.

(h) All intervals between cement plugs in the well bore shall be filled with mud.

(i) A report containing copies of the cementing tickets shall be submitted to BIA within 10 days of plugging completion.

(j) A surety bond must be on file with the Bureau of Indian Affairs (BIA), and shall not be released until the well has been properly plugged and the Regional Administrator has agreed to the release of the bond.

§ 147.2906 Emergency permits.

(a) An emergency permit may be issued if:

(1) There will be an imminent health hazard unless an emergency permit is issued; or

(2) There will be a substantial and irretrievable loss of oil and gas resources, timely application for a permit could not practicably have been made, and injection will not result in movement of fluid into an USDW; or

(3) There will be a substantial delay in oil or gas production, and injection will not result in movement of fluid into an USDW.

(b) *Requirements*—(1) *Permit duration.* (i) Emergency permits issued to avoid an imminent health threat may last no longer than the time necessary to prevent the hazard.

(ii) Emergency permits issued to prevent a substantial and irretrievable loss of oil or gas resources shall be for no longer than 90 days, unless a complete permit application has been submitted during that time; in which case the emergency permit may be extended until a final decision on the permit application has been made.

(iii) Emergency permits to avoid a substantial delay in oil or gas production shall be issued only after a complete permit application has been submitted and shall be effective until a final decision on the permit application is made.

(2) Notice of the emergency permit will be given by the Regional Administrator according to the notice procedure for a draft permit within 10 days after issuance.

(3) An emergency permit may be oral or written. If oral, a written emergency permit must be issued within five calendar days.

§ 147.2907 Confidentiality of information.

(a) The following information cannot be claimed confidential by the submitter:

(1) Name and address of permit applicant or permittee.

(2) Information concerning the existence, absence or level of contaminants in drinking water.

(b) Other information claimed as confidential will be processed in accordance with 40 CFR part 2.

§ 147.2908 Aquifer exemptions.

(a) After notice and opportunity for a public hearing, the Administrator may designate any aquifer or part of an aquifer as an exempted aquifer.

(b) An aquifer or its portion that meets the definition of a USDW may be exempted by EPA from USDW status if the following conditions are met:

(1) It does not currently serve as a source of drinking water, and

(2) It cannot now and will not in the future serve as a source of drinking water because:

(i) It is hydrocarbon producing, or can be demonstrated by a permit applicant as a part of a permit application for a Class II operation to contain hydrocarbons that are expected to be commercially producible (based on historical production or geologic information); or

(ii) It is situated at a depth or location which makes recovery of water for drinking water purposes economically or technologically impractical; or

(iii) It is so contaminated that it would be economically or technologically impractical to render that water fit for human consumption; or

(3) The Total Dissolved Solids content of the groundwater is more than 3,000 and less than 10,000 mg/1 and it is not reasonably expected to supply a public water system.

§ 147.2909 Authorization of existing wells by rule.

All existing Class II injection wells (wells authorized by BIA and constructed or completed on or before the effective date of the Osage UIC program) are hereby authorized. Owners or operators of wells authorized by rule must comply with the provisions of §§ 147.2903, 147.2905, 147.2907, and 147.2910 through 147.2915.

§ 147.2910 Duration of authorization by rule.

Existing Class II injuction wells are authorized for the life of the well, subject to the obligation to obtain a permit if specifically required by the Regional Administrator pursuant to § 147.2915.

§ 147.2911 Construction requirements for wells authorized by rule.

All Class II wells shall be cased and cemented to prevent movement of fluids into USDWs. The Regional Administrator shall review inventory information, data submitted in permit applications, and other records, to determine the adequacy of construction (completion) or existing injection wells. At the Regional Administrator's discretion, well casing and cementing may be considered adequate if it meets the BIA requirements that were in effect at the time of construction (completion) and will not result in movement of fluid into an USDW. If the Regional Administrator determines that the construction of a well authorized by rule is inadequate, he shall require a permit, or he shall notify the owner/operator and the owner/operator shall correct the problem according to instructions from the Regional Administrator. All corrections must be completed within one year of owner/operator notification of inadequacies.

§ 147.2912 Operating requirements for wells authorized by rule.

(a) Each well authorized by rule must have mechanical integrity. Mechanical integrity must be demonstrated within five years of program adoption. The Regional Administrator will notify the well owner/operator three months before proof of mechanical integrity must be submitted to EPA. The owner/operator must contact the Osage UIC office at least five days prior to testing. The owner/operator may perform the mechanical integrity test prior to receiving notice from the Regional Administrator, provided the Osage UIC office is notified at least five days in advance. Conditions of both paragraphs (a)(1) and (a)(2) of this section must be met.

(1) There is no significant leak in the casing, tubing or packer. This may be shown by the following:

(i) Performance of a pressure test of the casing/tubing annulus to at least 200 psi, or the pressure specified by the

Regional Administrator, to be repeated thereafter, at five year intervals, for the life of the well (pressure tests conducted during well operation shall maintain an injection/annulus pressure differential of at least 100 psi through the tubing length); or

(ii) Maintaining a positive gauge pressure on the casing/tubing annulus (filled with liquid) and monitoring the pressure monthly and reporting of the pressure information annually; or

(iii) Radioactive tracer survey; or

(iv) For enhanced recovery wells, records of monitoring showing the absence of significant changes in the relationship between injection pressure and injection flow rate at the well head, following an initial pressure test as described by paragraph (a)(1)(i) or (v) of this section; or

(v) Testing or monitoring programs approved by the Regional Administrator on a case-by-case basis, and

(2) There is no significant fluid movement into a USDW through vertical channels adjacent to the well bore. This may be shown by any of the following:

(i) Cementing records (need not be reviewed every five years);

(ii) Tracer survey (in appropriate hydrogeologic settings; must be used in conjunction with at least one of the other alternatives);

(iii) Temperature log;

(iv) Noise log; or

(v) Other tests deemed acceptable by the Regional Administrator.

(b) Injection pressure at the wellhead shall be limited so that it does not initiate new fractures or propagate existing fractures in the confining zone adjacent to any UDSW.

(1) For existing Class II salt water disposal wells, The owner/operator shall, except during well stimulation, use an injection pressure at the wellhead no greater than the pressure calculated by using the following formula:

$$Pm = (0.75 - 0.433Sg)d$$

where:

Pm = injection pressure at the wellhead in pounds per square inch

Sg = specific gravity of injected fluid (unitless)

d = injection depth in feet.

Owner/operator of wells shall comply with the above injection pressure limits no later than one year after the effective date of this regulation.

(2) For existing Class II enhanced recovery wells, the owner or operator:

(i) Shall use an injection pressure no greater than the pressure established by the Regional Administrator for the field or formation in which the well is located. The Regional Administrator shall establish such a maximum pressure after notice, opportunity for comment, and opportunity for a public hearing according to the provisions of part 124, subpart A of this chapter, and will inform owners and operators in writing of the applicable maximum pressure.

(ii) Prior to such time as the Regional Administrator establishes rules for maximum injection pressures based on data provided pursuant to paragraph (b)(2)(ii)(B) of this section the owner/operator shall:

(A) Limit injection pressure at the wellhead to a value which will not initiate new fractures or propagate existing fractures in the confining zone adjacent to any USDW; and

(B) Submit data acceptable to the Regional Administrator which defines the fracture pressure of the formation in which injection is taking place. A single test may be submitted on behalf of two or more operators conducting operations in the same formation, if the Regional Administrator approves such submission. The data shall be submitted to the Regional Administrator within one year of the effective date of this program.

(c) Injection wells or projects which have exhibited failure to confine injected fluids to the authorized injection zone or zones may be subject to restriction of injection volume and pressure, or shut-down, until the failure has been identified and corrected.

(The information collection requirements contained in paragraphs (a)(1) (ii) through (v) and (a)(2) (i) through (v) were approved by the Office of Management and Budget under control number 2040–0042)

§ 147.2913 Monitoring and reporting requirements for wells authorized by rule.

(a) The owner/operator has the duty to submit inventory information to the Regional Administrator upon request. Such request may be a general request to all operators in the County (e.g., public notice, or mailout requesting verification of information).

(b) The operator shall monitor the injection pressure (psi) and rate (bbl/day) at least monthly, with the results reported annually. The annual report shall specify the types of methods used to generate the monitoring data.

(c) The owner/operator shall notify the Osage UIC office within 30 days of any mechanical failure or down-hole problems involving well integrity, well workovers, or any noncompliance. As required, operators must apply for and obtain a workover permit from the Bureau of Indian Affairs Osage Agency before reentering an injection well. If the condition may endanger an USDW, the owner/operator shall notify the Osage UIC office orally within 24 hours, with written notice including plans for testing and/or repair to be submitted within five days. If all the information is not available within five days, a followup report must be submitted within 30 days.

(d) The owner/operator shall determine the nature of injected fluids initially, when the nature of injected fluids is changed or when new constituents are added. The records should reflect the source of character of the new fluid and the date changes were made.

(e) The owner/operator shall retain all monitoring records for three years, unless an enforcement action is pending, and then until three years after the enforcement action has been resolved.

(Approved by the Office of Management and Budget under control number 2040–0042)

§ 147.2914 Corrective action for wells authorized by rule.

Based on the Regional Administrator's discretion, corrective action to prevent movement of fluid into an USDW may be required for improperly sealed, completed or abandoned wells (*i.e.*, wells or well bores which may provide and avenue for fluid migration into a USDW) within the zone of endangering influence (as defined in § 147.2904, Area of Review) of an injection well authorized by rule.

(a) EPA will notify the operator when corrective action is required. Corrective action may include:

(1) Well modifications:

(i) Recementing;

(ii) Workover;

(iii) Reconditioning;

(iv) Plugging or replugging;

(2) Limitations on injection pressure to prevent movement of fluid into an USDW;

(3) A more stringent monitoring program; and/or

(4) Periodic testing of other wells to determine if significant movement of fluid has occurred.

(b) If the monitoring discussed in paragraph (a) (3) or (4) of this section indicate the potential endangerment of an USDW, then action as described in paragraph (a) (1) or (2) of this section must be taken.

§ 147.2915 Requiring a permit for wells authorized by rule.

(a) The Regional Administrator may require the owner or operator of any well authorized by rule to apply for an individual or area permit. The Regional Administrator shall notify the owner/operator in writing that a permit application is required. The notice shall contain:

(1) Explanation of need for application;

(2) Application form and, if appropriate, a list of additional information to be submitted; and

(3) Deadline for application submission.

(b) Cases in which the Regional Administrator may require a permit include:

(1) The owner or operator is not in compliance with provisions of the rule;

(2) Injection well is no longer within the category of wells authorized by rule;

(3) Protection of USDWs requires that the injection operation be regulated by requirements which are not contained in the rule; or

(4) Discretion of Regional Administrator.

(c) Injection is no longer authorized by rule upon the effective date of a permit or permit denial, or upon failure of the owner/operator to submit an application in a timely manner as specified in the notice described in paragraph (a) of this section.

(d) Any owner/operator authorized by rule may request to be excluded from the coverage of the rules by applying for an individual or area UIC permit.

§ 147.2916 Coverage of permitting requirements.

The owner or operator of a new Class II injection well or any other Class II well required to have a permit in the Osage Mineral Reserve shall comply with the requirements of §§ 147.2903, 147.2907, 147.2918, through 147.2928.

§ 147.2917 Duration of permits.

Unless otherwise specified in the permit, the permits will be in effect until the well is plugged and abandoned or the permit terminated. The Regional Administrator will review each issued permit at least once every five years to determine whether it should be modified or terminated.

§ 147.2918 Permit application information.

(a) The owner/operator must submit the original and three copies of the permit application, with two complete sets of attachments, to the Osage UIC office. The application should be signed by the owner/operator or a duly authorized representative. The application should also include appropriate forms (*i.e.*, BIA's Application for Operation or Report on Wells and EPA's permit application). The applicant has the burden of proof to show that the proposed injection activities will not endanger USDWs.

(b) The application shall include the information listed below. Information required by paragraphs (b) (5), (7), or (9) of this section that is contained in EPA or BIA files may be included in the application by reference.

(1) Map using township-range sections showing the area of review and identifying all wells of public record penetrating the injection interval.

(2) Tabulation of data on the wells identified in paragraph (b)(1) of this section, including location, depth, date drilled, and record of plugging and/or completion.

(3) Operating data:

(i) Maximum and average injection rate;

(ii) Maximum and average injection pressure;

(iii) Whether operation is on cyclic or continuous operation basis; and

(iv) Source and appropriate analysis of injected fluids, including total dissolved solids, chlorides, and additives.

(4) Geologic data on the injection and confining zones, including faults, geological name, thickness permeability, depth and lithologic description.

(5) Depth to base of fresh water.

(6) Schematic drawings of the surface and subsurface details of the well, showing:

(i) Total depth or plug-back depth;

(ii) Depth to top and bottom of injection interval;

(iii) Depths to tops and bottoms of casing and cemented intervals, and amount of cement to be used;

(iv) Size of casing and tubing, and depth of packer; and

(v) Hole diameter.

(7) Proof that surety bond has been filed with the BIA Superintendent in accordance with 25 CFR 226.6. A surety bond must be maintained until the well has been properly plugged.

(8) Verification of public notice, consisting of a list showing the names, addresses, and date that notice of permit application was given or sent to:

(i) The surface land owner;

(ii) Tenants on land where injection well is located or proposed to be located; and

(iii) Each operator of a producing lease within one-half mile of the well location.

(9) All available logging and testing data on the well (for existing wells, *i.e.*, wells to be converted or wells previously authorized by rule).

(Approved by the Office of Management and Budget under control number 2040–0042)

§ 147.2919 Construction requirements for wells authorized by permit.

(a) All Class II wells shall be sited so that they inject into a formation that

is separated from any USDW by a confining zone free of known open faults or fractures within the area of review.

(b) All Class II wells shall be cased and cemented to prevent movement of fluids into or between USDWs. Requirements shall be based on the depth to base of fresh water, and the depth to the injection zone. Newly drilled Class II wells must have surface casing set and cemented to at least 50 feet below the base of fresh water, or the equivalent (e.g., long string cemented to surface). At the Regional Administrator's discretion, the casing and cementing of wells to be converted may be considered adequate if they meet the BIA requirements that were in effect at the time of construction (completion), and will not result in movement of fluid into a USDW.

(c) Owner/operators shall provide a standard female fitting with cut-off valves, connected to the tubing and the tubing/casing annulus so that the injection pressure and annulus pressure may be measured by an EPA representative by attaching a gauge having a standard male fitting.

(d) No owner or operator may begin construction of a new well until a permit authorizing such construction has been issued, unless such construction is otherwise authorized by an area permit.

§ 147.2920 Operating requirements for wells authorized by permit.

(a) For new Class II wells, injection shall be through adequate tubing and packer. Packer shall be run on the tubing and set inside the casing within 75 feet of the top of the injection interval. For existing Class II, wells, injection shall be through adequate tubing and packer, or according to alternative operating requirements approved by the Regional Administrator, as necessary to prevent the movement of fluid into a USDW.

(b) Each well must have mechanical integrity. Mechanical integrity of the injection well must be shown prior to operation. The owner/operator must notify the Osage UIC office at least five days prior to mechanical integrity testing. Conditions of both paragraphs (b) (1) and (2) of this section must be met.

(1) There is no significant leak in the casing, tubing or packer. This may be shown by the following:

(i) Performance of a pressure test of the casing/tubing annulus to at least 200 psi, or the pressure specified by the Regional Administrator, to be repeated thereafter, at five year intervals, for the life of the well (Pressure tests conducted during well operation shall maintain an injection/annulus pressure differential of at least 100 psi throughout the tubing length); or

(ii) Maintaining a positive gauge pressure on the casing/tubing annulus (filled with liquid) and monitoring the pressure monthly and reporting of the pressure information annually; or

(iii) Radioactive tracer survey; or

(iv) For enhanced recovery wells, record of monitoring showing the absence of significant changes in the relationship between injection pressure and injection flow rate at the wellhead, following an initial pressure test as described by paragraph (b)(1) (i) or (v) of this section; or

(v) Testing or monitoring programs approved by the Administrator on a case-by-case basis, and

(2) There is no significant fluid movement into a USDW through vertical channels adjacent to the well bore. This may be shown by any of the following:

(i) Cementing records (need not be reviewed every five years);

(ii) Tracer survey (in appropriate hydrogelogic settings; must be used in conjunction with at least one of the other alternatives);

(iii) Temperature log;

(iv) Noise log; or

(v) Other tests deemed acceptable by the Administrator.

(c) Injection pressure at the wellhead shall be limited so that it does not initiate new fractures or propagate existing fractures in the confining zone adjacent to any UDSW.

(d) Injection wells or projects which have exhibited failure to confine injected fluids to the authorized injection zone or zones may be subject to restriction of injected volume and pressure or shut-in, until the failure has been identified and corrected.

(e) Operation shall not commence until proof has been submitted to the

Regional Administrator, or an EPA representative has witnessed that any corrective action specified in the permit has been completed.

§ 147.2921 Schedule of compliance.

The permit may, when appropriate, specify a schedule of compliance leading to compliance with the Safe Drinking Water Act and the Osage UIC regulations.

(a) Any schedule of compliance shall require compliance as soon as possible, and in no case later than three years after the effective date of the permit.

(b) If a permit establishes a schedule of compliance which exceeds one year from the date of permit issuance, the schedule shall set forth interim requirements and the dates for their achievement.

(1) The time between interim dates shall not exceed one year.

(2) If the time necessary for completion of any interim requirement is more than 1 year and is not readily divisible into stages for completion, the permit shall specify interim dates for the submission of reports of progress toward completion of the interim requirements and indicate a projected completion date.

(c) The permit shall be written to require that if a schedule of compliance is applicable, progress reports be submitted no later than 30 days following each interim date and the final date of compliance.

§ 147.2922 Monitoring and reporting requirements for wells authorized by permit.

(a) The owner/operator shall notify the Osage UIC office within 30 days of the date on which injection commenced.

(b) The operator shall monitor the injection pressure (psi) and rate (bbl/day) at least monthly, with the results reported annually. The annual reports shall specify the types or methods used to generate the monitoring data.

(c) The owner/operator shall notify the Osage UIC office within 30 days of any mechanical failure or down-hole problems involving well integrity, well workovers, or any noncompliance. (Operators should note the obligation to apply for and obtain a workover permit from the Bureau of Indian Affairs Osage Agency before reentering an injection well.) If the condition may endanger an USDW, the owner/operator shall notify the Osage UIC officer orally within 24 hours, with written notice including plans for testing and/or repair to be submitted within five days. If all the information is not available within five days, a followup report must be submitted within 30 days.

(d) The owner/operator shall retain all monitoring records for three years, unless an enforcement action is pending, and then until three years after the enforcement action has been resolved.

(e) The owner/operator shall notify the Osage UIC office in writing of a transfer of ownership at least 10 days prior to such transfer.

(Approved by the Office of Management and Budget under control number 2040–0042)

§ 147.2923 Corrective action for wells authorized by permit.

All improperly sealed, completed or abandoned wells (*i.e.*, wells or well bores which may provide an avenue for movement of fluid into an UDSW) within the zone of endangering influence (as defined in § 147.2904, Area of Review) that penetrate the injection zone of a Class II well, must have corrective action taken to prevent movement of fluid into a USDW.

(a) EPA will review completion and plugging records of wells within the zone of endangering influence that penetrate the injection zone and will notify the operator when corrective action is required. Corrective action may include:

(1) Well modifications, including:

(i) Recementing;

(ii) Workover;

(iii) Reconditioning; and/or

(iv) Plugging or replugging;

(2) Permit conditions to limit injection pressure so as to prevent movement of fluid into a USDW;

(3) A more stringent monitoring program; and/or

(4) Periodic testing of other wells within the area of review to determine if significant movement of fluid has occurred. If the monitoring discussed in paragraph (a)(3) or (a)(4) of this section indicates the potential endangerment

of a USDW, then action as described in paragraph (a)(1) or (a)(2) of this section must be taken.

(b) If the Regional Administrator has demonstrable knowledge that wells within the zone of endangering influence will not serve as conduits for fluid movement into a USDW, the permit may be approved without requiring corrective action. However, additional monitoring shall be required to confirm that no significant migration will occur.

§ 147.2924 Area permits.

(a) Area permits may be issued for more than one injection well if the following conditions are met:

(1) All existing wells are described and located in the permit application;

(2) All wells are within the same well field, project, reservoir or similar unit;

(3) All wells are of similar construction; and

(4) All wells are operated by the same owner/operator.

(b) Area permits shall specify:

(1) The area within which injection is authorized; and

(2) The requirements for construction, monitoring, reporting, operation and abandonment for all wells authorized by the permit.

(c) Area permits can authorize the construction and operation of new wells within the permit area, if:

(1) The permittee notifies the Regional Administrator in the annual report of when and where any new wells have or will be drilled;

(2) The new wells meet the criteria outlined in paragraphs (a) and (b) of this section; and

(3) The effects of the new wells were addressed in the permit application and approved by the Regional Administrator.

§ 147.2925 Standard permit conditions.

(a) The permittee must comply with all permit conditions, except as authorized by an emergency permit (described in § 147.2906). Noncompliance is grounds for permit modification, permit termination or enforcement action.

(b) The permittee has a duty to halt or reduce activity in order to maintain compliance with permit conditions.

(c) The permittee shall take all reasonable steps to mitigate any adverse environmental impact resulting from noncompliance.

(d) The permittee shall properly operate and maintain all facilities installed or used to meet permit conditions. Proper operation and maintenance also includes adequate operator staffing and training, adequate funding, and adequate engineering capability available.

(e) This permit may be modified or terminated for cause (see §§ 147.2927 and 147.2928). The filing of a request by the permittee for a permit modification or termination, or a notification of planned changes or anticipated noncompliance, does not stay any permit condition.

(f) This permit does not convey any property rights, or any exclusive privilege.

(g) The permittee shall furnish, within a reasonable time, information that the Regional Administrator requests, for determination of permit compliance, or if cause exists, for permit modification or termination.

(h) The permittee shall allow EPA representatives, upon presentation of appropriate credentials or other documentation, to:

(1) Enter permittee's premises where a regulated activity is conducted or located, or where records required by this permit are kept;

(2) Have access to and copy records required by this permit;

(3) Inspect any facilities, equipment, practices or operations regulated or required by this permit; and

(4) Sample or monitor any substances or parameters at any location for purpose of assuring compliance with this permit or the SDWA.

(i) *Monitoring and records.* (1) Samples and monitoring data shall be representative of injection activity.

(2) Permittee shall retain monitoring records for three years.

(3) Monitoring records shall include:

(i) Date, exact place and time of sampling or measurement;

(ii) Individual(s) who preformed the measurements;

(iii) Date(s) analyses were performed;

(iv) Individual(s) who performed the analyses;

(v) Analytical techniques or methods used, including quality assurance techniques employed to insure the generation of reliable data; and

(vi) Results of analyses.

(j) *Signatory requirements.* All applications, reports or information submitted to the Regional Administrator or the Osage UIC office must be signed by the injection facility owner/operator or his duly authorized representative. The person signing these documents must make the following certification:

"I certify under penalty of law that I have personally examined and am familiar with the information submitted in this document and all attachments and that, based on my inquiry of those individuals immediately responsible for obtaining the information, I believe that the information is true, accurate, and complete. I am aware that there are significant penalties for submitting false information, including the possibility of fine and imprisonment."

(k) *Reporting requirements.* (1) The permittee shall notify the Regional Administrator as soon as possible of any planned changes to the facility.

(2) The permittee shall give advance notice to the Regional Administrator of any planned changes which may result in noncompliance.

(3) This permit is not transferable to any person except after notice to the Regional Administrator in accordance with § 147.2926.

(l) A new injection well shall not commence injection until construction is complete and the Regional Administrator has been notified of completion of construction and has given his approval to commence injection.

(The information collection requirements contained in paragraphs (g) and (i) were approved by the Office of Management and Budget under control number 2040–0042)

§ 147.2926 Permit transfers.

(a) Permits may be transferred to another permittee:

(1) If the current permittee notifies the Regional Administrator at least 10 days before the proposed transfer date; and

(2) If the notice includes a written agreement between the existing and new permittees containing:

(i) A specific date for transfer of permit responsibility, coverage and liability; and

(ii) Assurance that the new permittee has a surety bond on file with BIA; and

(3) If the Regional Administrator does not respond with a notice to the existing permittee that the permit will be modified.

(b) If the conditions in paragraph (a) of this section are met, the transfer is effective on the date specified in paragraph (a)(2)(i) of this section.

§ 147.2927 Permit modification.

(a) Permits may be modified for the following causes only (with the exceptions listed in paragraph (b) of this section regarding minor modifications):

(1) There are substantial changes to the facility or activity which occurred after permit issuance that justify revised or additional permit conditions.

(2) The Regional Administrator has received information (e.g., from monitoring reports, inspections) which warrants a modified permit.

(3) The regulations or standards on which the permit was based have changed.

(4) The Regional Administrator has received notice of a proposed permit transfer.

(5) An interested person requests in writing that a permit be modified, and the Regional Administrator determines that cause for modification exists.

(6) Cause exists for termination under § 147.2928, but the Regional Administrator determines that permit modification is appropriate.

(b) *Minor modifications.* (1) Minor modifications do not require that the procedures listed in paragraph (c) of this section be followed.

(2) Minor modifications consist of:

(i) Correcting typographical errors;

(ii) Requiring more frequent monitoring or reporting;

(iii) Changing ownership or operational control (see § 147.2926, Permit Transfers); or

(iv) Changing quantities or types of injected fluids, provided:

(A) The facility can operate within conditions of permit;

(B) The facility classification would not change.

(c) *Modification procedures.* (1) A draft permit shall be prepared with proposed modifications.

(2) The draft permit shall follow the general permitting procedures (*i.e.*, public comment period, etc.) before a final decision is made.

(3) Only the changed conditions shall be addressed in the draft permit or public review.

§ 147.2928 Permit termination.

(a) Permits may be terminated for the following causes only:

(1) Noncompliance with any permit condition.

(2) Misrepresentation or failure to fully disclose any relevant facts.

(3) Determination that the permitted activity endangers human health or the environment.

(4) Interested person requests in writing that a permit be terminated and the Regional Administrator determines that request is valid.

(b) *Termination procedures.* (1) The Regional Administrator shall issue notice of intent to terminate (which is a type of draft permit).

(2) Notice of intent to terminate shall follow the general permitting procedures (*i.e.*, public comment period, etc.) before a final decision is made.

§ 147.2929 Administrative permitting procedures.

(a) *Completeness review.* (1) The Regional Administrator shall review each permit application for completeness with the application requirements in § 147.2918. The review will be completed in 10 days, and the Regional Administrator shall notify the applicant whether or not the application is complete.

(2) If the application is incomplete, the Regional Administrator shall:

(i) List the additional information needed;

(ii) Specify a date by which the information must be submitted; and

(iii) Notify the applicant when the application is complete.

(3) After an application is determined complete, the Regional Administrator may request additional information to clarify previously submitted information. The application will still be considered complete.

(4) If an applicant fails or refuses to correct deficiencies in the application, the permit may be denied and appropriate enforcement actions taken.

(b) *Draft permits.* (1) After an application is deemed complete, the Regional Administrator shall either prepare a draft permit or notice of intent to deny the permit (which is a type of draft permit). If the Regional Administrator later decides the tentative decision to deny was wrong, he shall withdraw the notice of intent to deny and prepare a draft permit.

(2) A draft permit shall contain at least the following information:

(i) The standard permit conditions in § 147.2925;

(ii) Any monitoring and reporting requirements;

(iii) The construction and operation requirements; and

(iv) Plugging and abandonment requirements.

(c) *Statement of basis.* (1) The Regional Administrator shall prepare a statement of basis for every draft permit.

(2) The statement of basis shall briefly describe the draft permit conditions and the reasons for them. In the case of a notice of intent to deny or terminate, the statement of basis shall give reasons to support the tentative decision.

(3) The statement of basis shall be sent to the applicant, and to any other person who requests a copy.

(d) *Public notice.* (1)(i) The Regional Administrator shall give public notice when:

(A) A permit application has been tentatively denied;

(B) A draft permit has been prepared;

(C) A hearing has been scheduled; or

(D) An appeal has been granted.

(ii) The applicant shall give public notice that he is submitting a permit application.

(iii) Public notice is not required when a request for permit modification or termination is denied. However, written notice will be given to the permittee and the requester.

(iv) Public notices may include more than one permit or action.

(2)(i) Public notice of a draft permit (including notice of intent to deny)

shall allow at least 15 days for public comment.

(ii) Public notice of a hearing shall be given at least 30 days before the hearing.

(3)(i) Public notice given by the Regional Administrator for the reasons listed in paragraph (d)(1)(i) of this section shall be mailed to the applicant, and published in a daily or weekly paper of general circulation in the affected area.

(ii) Notice of application submission required by paragraph (d)(1)(ii) of this section shall be given to the surface landowner, tenants on the land where an injection well is located or is proposed to be located, and to each operator of a producing lease within one-half mile of the well location prior to submitting the application to the Regional Administrator.

(4) The notice of application submission in paragraphs (d)(1)(ii) and (d)(3)(ii) of this section shall contain:

(i) The applicant's name and address;

(ii) The legal location of the injection well;

(iii) Nature of activity;

(iv) A statement that EPA will be preparing a draft permit and that there will be an opportunity for public comment; and

(v) The name and phone number of EPA contact person.

(5) All other notices shall contain:

(i) The name, address, and phone number of the Osage UIC office and contact person for additional information and copies of the draft permit;

(ii) Name and address of permit applicant or permittee;

(iii) Brief description of nature of activity;

(iv) Brief description of comment period and comment procedures;

(v) Location of the information available for public review; and

(vi) In the case of a notice for a hearing the notice shall also include:

(A) Date, time, and location of hearing;

(B) Reference to date of previous notices of the same permit; and

(C) Brief description of the purpose of the hearing, including rules and procedures.

(e) *Public comments.* (1) During the public comment period, any person may submit written comments on the draft permit, and may request a public hearing. A request for hearing shall be in writing and state the issues proposed to be raised in the hearing.

(2) The Regional Administrator shall consider all comments when making the final decision, and shall respond to comments after the decision is made. The response shall:

(i) Specify if any changes were made from the draft permit to the final permit decision, and why;

(ii) Briefly describe and respond to all significant comments on the draft permit made during the comment period, or hearing, if held; and

(iii) Be made available to the public.

(f) *Public hearings.* (1) The Regional Administrator shall hold a public hearing whenever he finds a significant amount of public interest in a draft permit, based on the requests submitted, or at his discretion.

(2) Any person may submit oral or written statements and data concerning the draft permit. The public comment period shall be automatically extended to the close of any public hearing held, or may be extended by the hearing officer at the hearing.

(3) A tape recording or written transcript of the hearing shall be made available to the public.

(g) *Reopening of the comment period.* (1) If any of the information submitted during the public comment period raises substantial new questions about a permit, the Regional Administrator may:

(i) Prepare a new draft permit;

(ii) Prepare a revised statement of basis; or

(iii) Reopen the comment period.

(2) Comments submitted during a reopened comment period shall be limited to the substantial new questions that caused its reopening.

(3) Public notice about any of the above actions shall be given and shall define the scope of the new questions raised.

(h) *Issuance and effective date of a permit.* (1) After the close of the comment period on a draft permit, the Regional Administrator shall make a final permit decision. The Regional Administrator shall notify the applicant and

each person who commented or requested to receive notice. The notice shall include reference to the procedures for appealing a permit decision.

(2) A final permit decision shall become effective 30 days after giving notice of the decision unless:

(i) A later date is specified in the notice;

(ii) Review is requested under § 147.2929(j); or

(iii) No comments requested a change in the draft permit, in which case the permit is effective immediately upon issuance.

(i) *Stays of contested permit conditions.* If a request for review of a final UIC permit § 147.2929(j) is granted, the effect of the contested permit conditions shall be stayed and shall not be subject to judicial review pending final agency action. If the permit involves a new injection well or project, the applicant shall be without a permit for the proposed well pending final agency action. Uncontested provisions which are not severable from those contested provisions shall be stayed with the contested provisions.

(j) *Appeal of permits.* (1) Any person who filed comments on the draft permit or participated in the public hearing may petition the Administrator to review any condition of the permit decision. Any person who failed to file comments or participate in the hearing may petition for administrative review only to the extent of the changes from the preliminary permit to the final permit decision.

(2) A person may request review of a final permit decision within 30 days after a final permit decision has been issued. The 30-day period within which a person may request review begins with the service of notice of the Regional Administrator's final permit decision unless a later date is specified in that notice.

(3) The petition requesting review shall include:

(i) A demonstration that the petition is eligible under the requirements of paragraph (j)(1) of this section; and, when appropriate,

(ii) A showing that the condition in question is based on:

(A) A finding of fact or conclusion of law that is clearly erroneous; or

(B) An exercise of discretion or important policy consideration which the Administrator, in his discretion, should review.

(4) The Administrator may also decide, on his initiative, to review any condition of any UIC permit issued under these requirements. The Administrator must act under this paragraph within 30 days of the date notice was given of the Regional Administrator's action.

(5) Within a reasonable time following the filing of the petition for review, the Administrator shall issue an order either granting or denying the request. To the extent that review is denied, the conditions of the final permit decision become final agency action.

(6) Public notice shall be given by the Regional Administrator of any grant of a review petition by the Administrator. Notice shall be sent to the applicant, the person requesting the review, appropriate persons on the Osage County mailing list and to newspapers of general circulation in the county. Included in the notice shall be a briefing schedule for the appeal and a statement that any interested person may file an amicus brief. Notice of denial of the review petition will be sent only to the person(s) requesting the review.

(7) A petition to the Administrator, under paragraphs (j) (1) and (2) of this section is a prerequisite to the seeking of judicial review of the final agency action. For purposes of judicial review, final agency action occurs when a final UIC permit is issued or denied by the Regional Administrator and agency review procedures are exhausted. A final permit decision shall be issued by the Regional Administrator:

(i) When the Administrator issues notice to the parties involved that review has been denied;

(ii) When the Administrator issues a decision on the merits of the appeal and the decision does not include a remand of the proceedings; or

(iii) Upon the completion of the remand proceedings if the proceedings are remanded, unless the Administrator's remand order specifically provides that the appeal of the remand decision will be required to exhaust the administrative remedies.

Subpart HHH—Lands of the Navajo, Ute Mountain Ute, and All Other New Mexico Tribes

SOURCE: 53 FR 43104, Oct. 25, 1988, unless otherwise noted.

§ 147.3000 EPA-administered program.

(a) *Contents*. The UIC program for Navajo Indian lands, except for Class II wells on Navajo Indian lands for which EPA has granted the Navajo Nation primacy for the SDWA Class II UIC program (as defined in § 147.3400), the Ute Mountain Ute (Class II wells only on Ute Mountain Ute lands in Colorado and all wells on Ute Mountain Ute lands in Utah and New Mexico), and all wells on other Indian lands in New Mexico is administered by EPA. (The term ''Indian lands'' is defined at 40 CFR 144.3.) The Navajo Indian lands are in the States of Arizona, New Mexico, and Utah; and the Ute Mountain Ute lands are in Colorado, New Mexico and Utah. This program consists of the UIC program requirements of 40 CFR parts 124, 144, 146, 148, and additional requirements set forth in the remainder of this subpart. The additions and modifications of this subpart apply only to the Indian lands described above. Injection well owners and operators, and EPA shall comply with these requirements.

(b) *Effective date*. The effective date for the UIC program on these lands, except for Class II wells on Navajo Indian lands for which EPA has granted the Navajo Nation primacy for the SDWA Class II UIC program (as defined in § 147.3400), is November 25, 1988.

[53 FR 43104, Oct. 25, 1988, as amended at 56 FR 9422, Mar. 6, 1991; 73 FR 65565, Nov. 4, 2008]

§ 147.3001 Definition.

Area of review. For the purposes of this subpart, area of review means the area surrounding an injection well or project area described according to the criteria set forth in § 147.3009 of this subpart.

§ 147.3002 Public notice of permit actions.

An applicant shall give public notice of his intention to apply for a permit as follows:

(a) Prior to submitting an application to the Director, the applicant shall give notice to each landowner, tenant, and operator of a producing lease within one-half mile of the well and to the affected Tribal Government. The notice shall include:

(1) Name and address of applicant;

(2) A brief description of the planned injection activities including well location, name and depth of the injection zone, maximum injection pressure and volume, and source and description of the fluid to be injected;

(3) Name, address, and phone number of the EPA contact person; and

(4) A statement that opportunity to comment will be announced to the public after EPA prepares a draft permit.

(b) In addition to the requirements of § 144.31(e) of this chapter, a permit applicant shall submit a description of the way the notice was given and the names and addresses of those to whom it was given.

(c) Upon written request and supporting documentation, the Director may waive the requirement in paragraph (a) of this section to give individual notice of intent to apply for permits in an area where it would be impractical. However, notice to the affected Tribal government shall not be waived.

(d) The Director shall also provide to the affected Tribal government all notices given to State governments under § 124.10(c) of this chapter.

§ 147.3003 Aquifer exemptions.

(a) *Aquifer exemptions in connection with Class II wells*. In accordance with § 144.7(b) and § 146.4 of this chapter, the portions of authorized injection zones into which existing Class II wells are currently injecting which are described in appendix A are hereby exempted. The exempted aquifers are defined by a one-quarter mile radius from the existing injection well. The exemption includes the intended injection zone only and is solely for the purpose of Class II injection.

(b) *Class III wells*. In addition to the requirements of § 144.7(c)(1) of this chapter, an applicant for a uranium mining permit which necessitates an aquifer exemption shall submit a plugging and abandonment plan containing

an aquifer cleanup plan, acceptable to the Director, describing the methods or techniques that will be used to meet the standards of § 147.3011. The cleanup plan shall include an analysis of pre-injection water quality for the constituents required by the Director. The Director shall consider the cleanup plan in addition to the other information required for permit applications under §§ 144.31(e) and 146.34 of this chapter.

§ 147.3004 Duration of rule authorization for existing Class I and III wells.

Notwithstanding § 144.21(a)(3)(i)(B) of this chapter, authorization by rule for existing Class I and III wells will expire 90 days after the effective date of this UIC program unless a complete permit application has been submitted to the Director.

§ 147.3005 Radioactive waste injection wells.

Notwithstanding §§ 144.24 and 146.51(b) of this chapter, owners and operators of wells used to dispose of radioactive waste (as defined in 10 CFR part 20, appendix B, table II, but not including high level and transuranic waste and spent nuclear fuel covered by 40 CFR part 191) shall comply with the permitting requirements pertaining to Class I wells in parts 124, 144 and 146 of this chapter, as modified and supplemented by this subpart.

§ 147.3006 Injection pressure for existing Class II wells authorized by rule.

(a) *Rule-authorized Class II saltwater disposal wells.* In addition to the requirements of § 144.28(f)(3)(ii) of this chapter, the owner or operator shall, except during well stimulation, use an injection pressure measured at the wellhead that is not greater than the pressure calculated by using the following formula:

$$Pm = 0.2d$$

where:

Pm = injection pressure at the wellhead in pounds per square inch

d = depth in feet to the top of the injection zone.

Owners and operators shall comply with this requirement no later than one year after the effective date of this program.

(b) *Rule-authorized Class II enhanced recovery and hydrocarbon storage wells.* (1) In addition to the requirements of § 144.28(f)(3)(ii) of this chapter, owners and operators shall use an injection pressure no greater than the pressure established by the Director for the field or formation in which the well is located. The Director shall establish such maximum pressure after notice (including notice to the affected Tribe), opportunity for comment, and opportunity for public hearing according to the provisions of part 124, subpart A, of this chapter, and shall inform owners and operators and the affected Tribe in writing of the applicable maximum pressure; or

(2) An owner or operator may inject at a pressure greater than that specified in paragraph (b)(1) of this section for the field or formation in which he is operating after demonstrating in writing to the satisfaction of the Director that such injection pressure will not violate the requirements of § 144.28(f)(3)(ii) of this chapter. The Director may grant such a request after notice (including notice to the affected Tribe), opportunity for comment and opportunity for a public hearing according to the provisions of part 124, subpart A of this chapter.

(3) Prior to the time that the Director establishes rules for maximum injection pressure under paragraph (b)(1) of this section the owner or operator shall:

(i) Limit injection pressure to a value which will not exceed the operating requirements of § 144.28(f)(3)(ii); and

(ii) Submit data acceptable to the Director which defines the fracture pressure of the formation in which injection is taking place. A single submission may be made on behalf of two or more operators conducting operations in the same field and formation, if the Director approves. The data shall be submitted to the Director within one year of the effective date of this program.

§ 147.3007 Application for a permit.

(a) Notwithstanding the requirements of § 144.31(c)(1) of this chapter,

the owner or operator of an existing Class I or III well shall submit a complete permit application no later than 90 days after the effective date of the program.

(b) The topographic map (or other map if a topographic map is unavailable) required by §144.31(e)(7) of this chapter, shall extend two miles from Class II wells, and 2½ miles from Class I and III wells. These maps will show all the information listed in paragraph 144.31(e)(7) within ½ mile for Class II wells and 2½ miles for Class I and III wells.

§147.3008 Criteria for aquifer exemptions.

The aquifer exemption criterion in §146.4(c) of this chapter shall not be available for this program.

§147.3009 Area of review.

The area of review shall be defined as follows:

(a) *Class II wells*. The area of review for Class II permits and area permits shall be defined by a fixed radius as described in §146.6(b) (1) and (2) of this chapter except that the radius shall be one-half mile.

(b) *Class I and III wells*. The area of review for Class I and III wells are well fields which may be either:

(1) An area defined by a radius two and one-half miles from the well or well field; or

(2) An area one-quarter mile from the well or well field where the well field production at the times exceeds injection to produce a net withdrawal; or

(3) A suitable distance, not less than one-quarter mile, proposed by the owner or operator and approved by the Director based upon a mathematical calculation such as that found in §146.6(a)(2) of this chapter.

§147.3010 Mechanical integrity tests.

The monitoring of annulus pressure listed in §146.8(b)(1) of this chapter will only be acceptable if preceded by a pressure test, using liquid or gas that clearly demonstrates that mechanical integrity exists at the time of the pressure test.

§147.3011 Plugging and abandonment of Class III wells.

To meet the requirements of §146.10(d) of this chapter, owners and operators of Class III uranium projects underlying or in aquifers containing up to 5,000 mg/l TDS which have been exempted under §146.4 of this chapter shall:

(a) Include in the required plugging and abandonment plan a plan for aquifer clean-up and monitoring which demonstrates adequate protection of surrounding USDWs.

(1) The Director shall include in each such permit for a Class III uranium project the concentrations of contaminants to which aquifers must be cleaned up in order to protect surrounding USDWs.

(2) The concentrations will be set as close as is feasible to the original conditions.

(b) When requesting permission to plug a well, owners and operators shall submit for the Director's approval a schedule for the proposed aquifer cleanup, in addition to the information required by §146.34(c).

(c) Cleanup and monitoring shall be continued until the owner or operator certifies that no constituent listed in the permit exceeds the concentrations required by the permit, and the Director notifies the permittee in writing that cleanup activity may be terminated.

§147.3012 Construction requirements for Class I wells.

In addition to the cementing requirement of §146.12(b) of this chapter, owners and operators of Class I wells shall, through circulation, cement all casing to the surface.

§147.3013 Information to be considered for Class I wells.

(a) In addition to the information listed in §146.14(a) of this chapter, the Director shall consider the following prior to issuing any Class I permit:

(1) Expected pressure changes, native fluid displacement, and direction of movement of the injected fluid; and

(2) Methods to be used for sampling, and for measurement and calculation of flow.

(b) In addition to the information listed in § 146.14(b) of this chapter, the Director shall consider any information required under § 146.14(a) of this chapter (as supplemented by this subpart) that has been gathered during construction.

§ 147.3014 Construction requirements for Class III wells.

(a) In addition to the requirements of § 146.32(c)(3) of this chapter, radiological characteristics of the formation fluids shall be provided to the Director.

(b) In addition to the requirements of § 146.32(e) of this chapter, the Director may require monitoring wells to be completed into USDWs below the injection zone if those USDWs may be affected by mining operations.

§ 147.3015 Information to be considered for Class III wells.

(a) In addition to the requirements of § 146.34(a) of this chapter, the following information shall be considered by the Director:

(1) Proposed construction procedures, including a cementing and casing program, logging procedures, deviation checks, and a drilling, testing and coring program.

(2) Depth to the proposed injection zone, and a chemical, physical and radiological analysis of the ground water in the proposed injection zone sufficient to define pre-injection water quality as required for aquifer cleanup by § 147.3011 of this subpart.

(3) An aquifer cleanup plan if required by § 147.3003(b) of this subpart.

(4) Any additional information that may be necessary to demonstrate that cleanup will reduce the level of contaminants in the surrounding USDWs as close as feasible to the original conditions.

(b) In addition to the requirements of § 146.34(b) of this chapter, the Director shall consider any information required under § 146.34(a) of this chapter (as supplemented by this subpart) that has been gathered during construction.

§ 147.3016 Criteria and standards applicable to Class V wells.

In addition to the criteria and standards applicable to Class V wells set forth in subpart F of part 146 of this chapter, owners and operators of wells that do not fall within the Class IV category but that are used to dispose of radioactive wastes (as defined in 10 CFR part 20, appendix B, table II, column 2, but not including high level and transuranic wastes and spent nuclear fuel covered by 40 CFR part 191) shall comply with all of the requirements applicable to Class I injection wells in 40 CFR parts 124, 144 and 146 as supplemented by this subpart.

APPENDIX A TO SUBPART HHH OF PART 147—EXEMPTED AQUIFERS IN NEW MEXICO

The areas described by a one-quarter mile radius around the following Class II wells in the listed formations are exempted for the purpose of Class II injection.

Sec.						Well No.
Arco Oil & Gas Co.—Operator/Horseshoe Gallup—Field/Gallup—Formation						
SE/NE	5	T30N	R16W	1650′FNL	330′FEL	134
NW/NW	30	T31N	R16W	660′FNL	703′FWL	8
SE/SW	28	T31N	R16W	790′FSL	2150′FWL	167
NW/SE	33	T31N	R16W	1710′FSL	2310′FEL	199
SE/NW	35	T31N	R16W	2105′FNL	2105′FWL	196
NW/NW	4	T30N	R16W	455′FNL	4435′FEL	219
NW/SW	33	T31N	R16W	1980′FSL	386′FWL	65
NW/SE	27	T31N	R16W	1980′FSL	2080′FEL	164
SE/SE	30	T31N	R16W	660′FSL	660′FEL	5
NW/NW	34	T31N	R16W	730′FNL	515′FWL	180
NW/NE	34	T31N	R16W	813′FNL	2036′FEL	182
NW/NE	2	T30N	R16W	720′FNL	2040′FEL	229
NW/NW	29	T31N	R16W	660′FNL	660′FWL	24
NW/SW	13	T31N	R17W	1975′FSL	670′FWL	77
NW/SE	29	T31N	R16W	1980′FSL	1980′FEL	22
SE/SW	27	T31N	R16W	660′FSL	1980′FWL	171
NW/SW	35	T31N	R16W	1980′FSL	660′FWL	205
SE/NW	30	T31N	R16W	1980′FNL	2061′FWL	7

	Sec.					Well No.
NW/NE	31	T31N	R16W	660′FNL	1980′FEL	17
NW/NE	4	T30N	R16W	330′FNL	2160′FEL	221
NW/NE	29	T31N	R16W	660′FNL	1980′FEL	26
SE/NE	34	T31N	R16W	1990′FNL	645′FEL	194
SE/SE	31	T31N	R16W	640′FSL	660′FEL	27
NE/SW	14	T31N	R17W	2250′FSL	2630′FWL	94
NE/NW	14	T31N	R17W	625′FNL	1995′FWI,	69
SE/NW	10	T30N	R16W	1900′FNL	2080′FWL	271
SE/SE	29	T31N	R16W	560′FSL		21
SE/NE	30	T31N	R16W	1980′FNL	660′FEL	10
SE/NW	29	T31N	R16W	2080′FNL	1980′FWL	23
NW/SE	25	T31N	R17W	1980′FSL	1980′FEL	122
SE/SW	32	T31N	R16W	660′FSL	1980′FWL	14
NW/SW	30	T31N	R16W	2021′FSL	742′FWL	19
SE/SW	13	T31N	R17W	660′FSL	1980′FWL	82
NW/NW	27	T31N	R16W	520′FNL	660′FWL	150
SE/SE	28	T31N	R16W	660′FSL	660′FEL	169
NW/SW	29	T31N	R16W	1980′FSL	660′FWL	11
SE/NW	34	T31N	R16W	2310′FNL	1650′FWL	192
SE/NW	29	T31N	R16W	660′FSL	1980′FWL	12
NW/SW	27	T31N	R16W	1650′FSL	330′FWL	162
NE/SE	23	T31N	R17W	1880′FSL	340′FEL	96
NW/SW	24	T31N	R17W	2050′FSL	990′FWL	97
SE/NW	4	T30N	R16W	2060′FNL	1710′FWL	232
NW/NW	31	T31N	R16W	620′FNL	701′FWL	30
NW/SE	35	T31N	R16W	1980′FSL	1980′FEL	207
SE/NE	32	T31N	R16W	1980′FNL	417′FEL	20
NE/NW	28	T31N	R16W	1980′FNL	1980′FEL	152
NE/NW	34	T31N	R16W	2140′FSL	735′FWL	201
SE/NW	3	T30N	R16W	2310′FNL	1640′FWL	236
SE/SW	34	T31N	R16W	660′FSL	1980′FWL	213
NW/NE	30	T31N	R16W	660′FNL	1980′FFL	9
SE/SW	26	T31N	R16W	660′FSL	1980′FWL	175
NW/SE	30	T31N	R16W	1980′FSL	1980′FEL	6
SE/NW	9	T30N	R16W	1650′FNL	2131′FWL	264
NW/SW	4	T30N	R16W	2310′FSL	4390′FEL	242
NW/SW	2	T30N	R16W	1980′FSL	660′FWL	250
NW/NW	33	T31N	R16W	660′FNL	386′FWL	66
NE/NE	15	T31N	R17W	660′FNL	660′FEL	67
NW/NE	33	T31N	R16W	660′FNL	1980′FEL	178
NW/SE	24	T31N	R17W	1875′FSL	1900′FEL	99
NW/NE	28	T31N	R16W	660′FNL	1980′FEL	148
NW/NW	19	T31N	R16W	680′FNL	682′FWL	89
NW/SE	4	T30N	R16W	1820′FSL	2130′FEL	244
SE/SW	20	T31N	R16W	660′FSL	1980′FWL	115
NW/NE	25	T31N	R17W	660′FNL	1980′FEL	118
SE/SW	4	T30N	R16W	660′FSL	3300′FEL	253
NW/SW	19	T31N	R16W	1980′FSL	706′FWL	101
NW/SE	32	T31N	R16W	1950′FSL	1980′FEL	22
NW/NW	35	T31N	R16W	605′FNL	690′FWL	184
SE/NE	29	T31N	R16W	1980′FNL	417′FEL	25
SE/NW	19	T31N	R16W	1980′FNL	2023′FWL	95
NW/NW	32	T31N	R16W	660′FNL	660′FWL	4
SE/SW	24	T31N	R17W	660′FSL	3300′FEL	107
SE/NE	28	T31N	R16W	2105′FNL	940′FEL	154
NW/NE	35	T31N	R16W	610′FNL	2000′FEL	186
SE/SW	5	T31N	R16W	990′FSL	2310′FWL	139
NW/SE	28	T31N	R16W	1980′FSL	1980′FEL	160
SE/SE	33	T31N	R16W	330′FSL	990′FEL	211
NW/NE	5	T30N	R16W	330′FNL	1650′FEL	128
SE/NW	27	T31N	R16W	1900′FNL	2050′FWL	156
SE/SW	35	T31N	R16W	660′FSL	1980′FWL	217
NW/NW	10	T30N	R16W	526′FNL	330′FWL	265
NE/SW	21	T31N	R16W	1880′FSL	1980′FWL	143
NW/NE	24	T31N	R17W	409′FNL	1914′FEL	87
NW/SW	32	T31N	R16W	1980′FSL	660′FWL	15
SE/SE	34	T31N	R16W	960′FSL	910′FEL	215
SW/SE	21	T31N	R16W	820′FSL	1820′FEL	145
SE/SE	27	T31N	R16W	610′FSL	640′FEL	173
NW/SW	3	T30N	R16W	1920′FSL	350′FWL	246
SE/SW	19	T31N	R16W	601′FSL	2002′FWL	111
SW/SE	14	T31N	R17W	330′FSL	1900′FEL	79
NW/NW	27	T31N	R16W	520′FNL	660′FWL	150

	Sec.					Well No.
SE/NW	31	T31N	R16W	1724′FNL	2067′FWL	29
NW/NE	32	T31N	R16W	660′FNL	1980′FEL	13
SE/NE	24	T31N	R17W	1998′FNL	702′FEL	93
NW/NW	5	T30N	R16W	660′FNL	660′FWL	126
NW/SW	28	T31N	R16W	1740′FSL	590′FWL	158
SE/NE	31	T31N	R16W	1980′FNL	660′FEL	16
NW/NW	24	T31N	R17W	660′FNL	760′FWL	85
Energy Reserve Backup Inc.—Operator/Horseshoe Gallup—Field/Gallup—Formation						
SE/SE	5	T31N	R17W	660′FSL	660′FEL	4
NE/SW	10	T30N	R16W	1970′FSL	2210′FWL	31
SE/NW	11	T30N	R16W	2090′FNL	2190′FWl	29
SE/SE	10	T30N	R16W	700′FSL	500′FEL	37
Solar Petroelum Inc.—Operator/Horseshoe—Field/Gallup—Formation						
SW/SE	11	T31N	R17W	736′FSL	2045′FEL	205
SE/NE	9	T31N	R17W	1980′FNL	660′FEL	122
NW/SE	4	T31N	R17W	1980′FSL	1980′FFL	127
NE/NE	10	T31N	R17W	660′FNL	660′FEL	136
SE/SW	4	T31N	R17W	660′FSL	1980′FWL	125
SW/NW	11	T31N	R17W	2300′FNL	660′FWL	206
NW/SW	4	T31N	R17W	1980′FSL	660′FWL	103
SE/NW	4	T31N	R17W	1989′FNL	1980′FWL	128
NW/NW	4	T31N	R17W	660′FNL	660′FWL	101
SW/NE	10	T31N	R17W	1980′FNL	1980′FEL	117
SW/NW	10	T31N	R17W	1980′FNL	660′FWL	108
SW/SW	10	T31N	R17W	660′FSL	660′FWL	114
SW/SE	3	T31N	R17W	330′FSL	2310′FEL	143
SE/NE	5	T31N	R17W	1980′FNL	660′FEL	302
NE/NE	5	T31N	R17W	1950′FNL	1050′FEL	307
SE/SE	9	T31N	R17W	990′FSL	850′FEL	140
NE/NW	10	T31N	R17W	660′FNL	1980′FWL	118
SW/SW	11	T31N	R17W	660′FSL	660′FWL	204
NW/SE	9	T31N	R17W	1980′FSL	1980′FEL	115
SW/SE	10	T31N	R17W	990′FSL	1980′FEL	144
NW/NE	9	T31N	R17W	660′FNL	1980′FEL	123
NE/SW	10	T31N	R17W	1980′FSL	1980′FWL	109
NE/SW	11	T31N	R17W	1980′FSL	1980′FWL	203
SE/NW	9	T31N	R17W	1980′FNL	1980′FWL	134
NW/SW	3	T31N	R17W	1980′FSL	660′FWL	132
SW/SW	3	T31N	R17W	560′FSL	660′FWL	110
NW/NW	9	T31N	R16W	660′FNL	660′FWL	133
SE/SE	4	T31N	R17W	660′FSL	660′FEL	124
WTR Oil Co.—Operator/Horseshoe Gallup—Field/Gallup—Formation						
NE/SW	33	T32N	R17W	1980′FSL	1989′FWL	2
Arco Oil & Gas Co.—Operator/Many Rocks Gallup—Field/Gallup—Formation						
NW/NW	7	T31N	R16W	898′FNL	500′FWL	2
SW/NE	17	T31N	R16W	1673′FNL	1789′FEL	21
NW/SE	17	T31N	R16W	1890′FSL	2150′FEL	23
SW/NE	7	T31N	R16W	2310′FNL	2310′FEL	6
NE/SW	8	T31N	R16W	1650′FSL	1650′FWL	12
NE/NW	17	T31N	R16W	660′FNL	2030′FWL	18
NE/NE	18	T31N	R16W	360′FNL	855′FEL	16
SE/SW	7	T31N	R16W	716′FSL	2185′FWL	13
SE/SE	17	T31N	R16W	660′FSL	660′FEL	26
NE/SW	17	T31N	R16W	2040′FSL	2070′FWL	22
SW/SW	6	T31N	R16W	330′FSL	330′FWL	1
SW/NW	17	T31N	R16W	2073′FNL	641′FWL	19
NW/SW	17	T31N	R16W	1967′FSL	981′FWL	8
James P. Woosley—Operator/Many Rocks Gallup—Field/Gallup—Formation						
NW/NE	20	T32N	R17W	330′FNL	2310′FEL	13
SW/SW	27	T32N	R17W	660′FSL	990′FWL	1
SW/NW	17	T32N	R17W	2310′FWL	330′FWL	4
SW/NW	27	T32N	R17W	260′FWL	1360′FNL	11
NE/SW	27	T32N	R17W	1980′FSL	1980′FWL	6
NE/SE	18	T32N	R17W	2474′FSL	133′FEL	18

	Sec.					Well No.
SW/SE	27	T32N	R17W	625′FNL	2000′FEL	3
NE/SE	28	T32N	R17W	1980′FSL	330′FEL	12
Solar Petroleum Inc.—Operator/Many Rocks Gallup—Field/Gallup—Formation						
SE/NW	1	T31N	R17W	1980′FNL	1980′FWL	216
NW/NE	2	T31N	R17W	805′FNL	940′FEL	215
SE/NE	2	T31N	R17W	1980′FNL	660′FEL	218
NW/SW	1	T31N	R17W	2310′FSL	990′FNL	223
SE/NE	12	T31N	R17W	1820′FNL	500′FEL	217
WTR Oil Co.—Operator/Many Rocks Gallup—Field/Gallup—Formation						
NW/NW	35	T32N	R17W	810′FNL	510′FWL	11
SE/SE	35	T32N	R17W	660′FSL	660′FEL	6
SE/NE	34	T32N	R17W	775′FEL	1980′FNL	8
SE/NW	35	T32N	R16W	1980′FNL	1980′FWL	9
NW/SE	35	T32N	R17W	1980′FSL	1980′FEL	7
Chaco Oil Co.—Operator/Red Mtn Meseverde—Field/Menefee—Formation						
NE/NE	29	T20N	R9W	395′FNL	1265′FEL	6
SE/SW	20	T20N	R9W	442′FSL	2430′FWL	17
Geo Engineering Inc.—Operator/Red Mtn Meseverde—Field/Menefee—Formation						
NW/NE	29	T20N	R9W	160′FNL	2135′FEL	35
NE/NE	29	T20N	R9W	225′FNL	1265′FEL	7
SE/NW	29	T20N	R9W	1344′FNL	2555′FWL	20
NW/NE	29	T20N	R9W	615′FNL	1920′FEL	5
NE/NW	29	T20N	R9W	834′FNL	2113′FWL	21
SW/SE	20	T20N	R9W	265′FSL	2150′FEL	36
NE/NE	29	T20N	R9W	5′FNL	1130′FEL	8
SE/SE	20	T20N	R9W	450′FSL	1145′FEL	24
SE/SE	20	T20N	R9W	990′FSL	1280′FEL	10
NW/NE	29	T20N	R9W	1115′FNL	2325′FEL	22
SE/SE	20	T20N	R9W	1085′FSL	860′FEL	12
Tesoro Petroleum Co.—Operator/S. Hospah Lower Sand—Field/Hospah—Formation						
NW/SE	6	T17N	R8W	2310′FSL	2310′FEL	28
SW/SE	6	T17N	R8W	990′FSL	2310′FFL	34
SW/SW	6	T17N	R8W	5′FSL	20′FWL	18
SE/SW	6	T17N	R8W	5′FSL	2635′FWL	20

Subpart III—Lands of Certain Oklahoma Indian Tribes

SOURCE: 53 FR 43109, Oct. 25, 1988, unless otherwise noted.

§ 147.3100 EPA-administered program.

(a) *Contents*. The UIC program for the Indian lands in Oklahoma, except for that covering the Class II wells of the Five Civilized Tribes, is administered by EPA. The UIC program for all wells on Indian lands in Oklahoma, except Class II wells on the Osage Mineral Reserve (found at 40 CFR part 147, Subpart GGG) and the Class II program for the Five Civilized Tribes, consists of the UIC program requirements of 40 CFR parts 124, 144, 146, 148, and additional requirements set forth in the remainder of this subpart. Injection well owners and operators, and EPA shall comply with these requirements.

(b) *Effective date*. The effective date for the UIC program for all wells on Indian lands except Class II wells on the Osage Mineral Reserve and Class II wells on the lands of the Five Civilized Tribes is November 25, 1988.

[53 FR 43109, Oct. 25, 1988, as amended at 56 FR 9422, Mar. 6, 1991]

§ 147.3101 Public notice of permit actions.

(a) In addition to the notice requirements of § 124.10 of this chapter, the Director shall provide to the affected Tribal government all notices given to an affected State government under § 124.10(c) of this chapter.

(b) *Class I and III wells*. In addition to the notice requirements of § 124.10 of this chapter:

(1) Owners and operators of Class I and III wells shall notify the affected Tribal government prior to submitting an application for a permit, shall publish such notice in at least two newspapers of general circulation in the area of the proposed well, and shall broadcast notice over at least one local radio station.

(2) The Director shall publish a notice of availability of a draft permit in at least two newspapers of general circulation in the area of the proposed well, and broadcast notice over at least one local radio station. The public notice shall allow at least 45 days for public comment.

(c) *Class II wells*. In addition to the notice requirements of § 124.10 of this chapter:

(1) Owners and operators of Class II wells shall give notice of application for a permit to the affected Tribal government prior to submitting the application to the Director.

(2) In addition to the public notice required for each action listed in § 124.10(a) of this chapter, the Director shall also publish notice in a daily or weekly newspaper of general circulation in the affected area for actions concerning Class II wells.

§ 147.3102 Plugging and abandonment plans.

In lieu of the requirements of § 144.28(c)(1) and (2) (i)–(iii) of this chapter, owners and operators of Class II wells shall comply with the plugging and abandonment provisions of § 147.3108 of this subpart.

§ 147.3103 Fluid seals.

Notwithstanding §§ 144.28(f)(2) and 146.12(c) of this chapter, owners and operators shall not use a fluid seal as an alternative to a packer.

§ 147.3104 Notice of abandonment.

(a) In addition to the notice required by § 144.28(j)(2) of this chapter, the owner or operator shall at the same time submit plugging information in conformance with § 147.3108 of this subpart including:

(1) Type and number of plugs;

(2) Elevation of top and bottom of each plug;

(3) Method of plug placement; and

(4) Type, grade and quantity of cement to be used.

(b) In addition to the permit conditions specified in §§ 144.51 and 144.52 of this chapter, each owner and operator shall submit and each permit shall contain the following information (in conformance with § 146.3108 of this subpart):

(1) Type and number of plugs;

(2) Elevation of top and bottom of each plug;

(3) Method of plug placement; and

(4) Type, grade and quantity of cement to be used.

§ 147.3105 Plugging and abandonment report.

(a) In lieu of the time periods for submitting a plugging report in § 144.28(k) of this chapter, owners and operators of Class I and III wells shall submit the report within 15 days of plugging the well and owners or operators of Class II wells within 30 days of plugging, or at the time of the next required operational report (whichever is less.) If the required operational report is due less than 15 days following completion of plugging, then the plugging report shall be submitted within 30 days for Class II wells and 15 days for Class I and III wells.

(b) In addition to the requirement of § 144.28(k)(1) of this chapter, owners and operators of Class II wells shall include a statement that the well was plugged in accordance with § 146.10 of this chapter and § 147.3109 of this subpart, and, if the actual plugging differed, specify the actual procedures used.

(c) The schedule upon which reports of plugging must be submitted are changed from those in § 144.51(o) to those specified in paragraph (a) of this section.

§ 147.3106 Area of review.

(a) When determining the area of review under § 146.6(b) of this chapter, the fixed radius shall be no less than one mile for Class I wells and one-half mile for Class II and III wells. In the case of an application for an area permit, determination of the area of review under § 146.6(b) shall be a fixed width of not

less than one mile for the circumscribing area of Class I projects and one-half mile for the circumscribing area of Class II and III projects.

(b) However, in lieu of §146.6(c) of this chapter, if the area of review is determined by a mathematical model pursuant to paragraph §146.6(a) of this chapter, the permissible radius is the result of such calculation even if it is less than one mile for Class I wells and one-half for Class II and III wells.

§147.3107 Mechanical integrity.

(a) Monitoring of annulus pressure conducted pursuant to §146.8(b)(1) shall be preceded by an initial pressure test. A positive gauge pressure on the casing/tubing annulus (filled with liquid) shall be maintained continuously. The pressure shall be monitored monthly.

(b) Pressure tests conducted pursuant to §146.8(b)(2) of this chapter shall be performed with a pressure on the casing/tubing annulus of at least 200 p.s.i. unless otherwise specified by the Director. In addition, pressure tests conducted during well operation shall maintain an injection/annulus pressure differential of at least 100 p.s.i. throughout the tubing length.

(c) Monitoring of enhanced recovery wells conducted pursuant to §146.8(b)(3), must be preceded by an initial pressure test that was conducted no more than 90 days prior to the commencement of monitoring.

§147.3108 Plugging Class I, II, and III wells.

In addition to the requirements of §146.10 of this chapter, owners and operators shall comply with the following when plugging a well:

(a) For Class I and III wells:

(1) The well shall be filled with mud from the bottom of the well to a point one hundred (100) feet below the top of the highest disposal or injection zone and then with a cement plug from there to at least one hundred (100) feet above the top of the disposal or injection zone.

(2) A cement plug shall also be set from a point at least fifty (50) feet below the shoe of the surface casing to a point at least five (5) feet above the top of the lowest USDW.

(3) A final cement plug shall extend from a point at least thirty feet below the ground surface to a point five (5) feet below the ground surface.

(4) All intervals between plugs shall be filled with mud.

(5) The top plug shall clearly show by permanent markings inscribed in the cement or on a steel plate embedded in the cement the well permit number and date of plugging.

(b) For Class II wells:

(1) The well shall be kept full of mud as casing is removed. No surface casing shall be removed without written approval from the Director.

(2) If surface casing is adequately set and cemented through all USDWs (set to at least 50 feet below the base of the USDW), a plug shall be set at least 50 feet below the shoe of the casing and extending at least 50 feet above the shoe of the casing; or

(3) If the surface casing and cementing is inadequate, the well bore shall be filled with cement from a point at least 50 feet below the base of the USDW to a point at least 50 feet above the shoe of the surface casing, and any additional plugs as required by the Director.

(4) In all cases, the top 20 feet of the well bore below 3 feet of ground surface shall be filled with cement. Surface casing shall be cut off 3 feet below ground surface and covered with a secure steel cap on top of the surface pipe. The remaining 3 feet shall be filled with dirt.

(5) Except as provided in sub-paragraph (b)(6) of this section, each producing or receiving formation shall be sealed off with at least a 50-foot cement plug placed at the base of the formation and at least a 50-foot cement plug placed at the top of the formation.

(6) The requirement in sub-paragraph (b)(5) of this section does not apply if the producing/receiving formation is already sealed off from the well bore with adequate casing and cementing behind casing, and casing is not to be removed, or the only openings from the producing/receiving formation into the well bore are perforations in the casing, and the annulus between the casing and the outer walls of the well is filled with cement for a distance of 50 feet above the top of the formation.

When such conditions exist, a bridge plug capped with at least 10 feet of cement set at the top of the producing formation may be used.

(7) When specified by the Director, any uncased hole below the shoe of any casing to be left in the well shall be filled with cement to a depth of at least 50 feet below the casing shoe, or the bottom of the hole, and the casing above the shoe shall be filled with cement to at least 50 feet above the shoe of the casing. If the well has a screen or liner which is not to be removed, the well bore shall be filled with cement from the base of the screen or liner to at least 50 feet above the top of the screen or liner.

(8) All intervals between cement plugs in the well bore must be filled with mud.

(c) For the purposes of this section mud shall be defined as: mud of not less than thirty-six (36) viscosity (API Full Funnel Method) and a weight of not less than nine (9) pounds per gallon.

§ 147.3109 Timing of mechanical integrity test.

The demonstrations of mechanical integrity required by §146.14(b)(2) of this chapter prior to approval for the operation of a Class I well shall, for an existing well, be conducted no more than 90 days prior to application for the permit and the results included in the permit application. The owner or operator shall notify the Director at least seven days in advance of the time and date of the test so that EPA observers may be present.

Subpart JJJ—Assiniboine and Sioux Tribes

§ 147.3200 Fort Peck Indian Reservation: Assiniboine & Sioux Tribes—Class II wells.

The UIC program for Class II injection wells on all lands within the exterior boundaries of the Fort Peck Indian Reservation is the program administered by the Assiniboine and Sioux (Fort Peck) Tribes approved by EPA pursuant to section 1425 of the SDWA. Notice of this approval was published in the FEDERAL REGISTER on October 27, 2008; the effective date of this program is November 26, 2008. This program consists of the following elements as submitted to EPA in the Fort Peck Tribes' program application:

(a) *Incorporation by reference*. The requirements set forth in the Fort Peck Tribes' Statutes, Regulations, and Resolutions notebook, dated June 2008, are hereby incorporated by reference and made part of the applicable UIC program under the SDWA for the Fort Peck Indian Reservation. This incorporation by reference was approved by the Director of the Federal Register in accordance with 5 U.S.C. 552(a) and 1 CFR part 51. Copies may be obtained or inspected at the Fort Peck Tribal Offices, 605 Indian Avenue, Poplar, Montana 59255, (406) 768–5155, at the Environmental Protection Agency, Region 8, 1595 Wynkoop Street, Denver, Colorado 80202–1129, (800) 227–8917, or at the National Archives and Records Administration (NARA). For information on the availability of this material at NARA, call (202) 741–6030, or go to: *http://www.archives.gov/federal_register/code_of_federal_regulations/ibr_locations.html*.

(b) *Memorandum of Agreement (MOA)*. The MOA between EPA and the Fort Peck Tribes signed by EPA on July 31, 2007.

(c) *Statements of legal authority*. Letters to EPA from Sonosky, Chambers, Sachse, Endreson & Perry, dated September 4, 2003 (attaching a June 17, 2002 letter), March 27, 2001, July 19, 1999, March 13, 1995, March 16, 1994, November 4, 1992, July 14, 1989, and April 13, 1989, and letters submitted as part of the Fort Peck Tribes' application.

(d) *Program Description*. The Program Description submitted as part of the Fort Peck Tribes' application, and any other materials submitted as part of the application or as a supplement to it.

[73 FR 63646, Oct. 27, 2008]

Subpart KKK [Reserved]

Subpart LLL—Navajo Indian Lands

§ 147.3400 Navajo Indian lands—Class II wells.

The UIC program for Class II injection wells located: Within the exterior

boundaries of the formal Navajo Reservation, including the three satellite reservations (Alamo, Canoncito and Ramah), but excluding the former Bennett Freeze Area, the Four Corners Power Plant and the Navajo Generating Station; and on Navajo Nation tribal trust lands and trust allotments outside those exterior boundaries (collectively referred to as ''Navajo Indian lands for which EPA has granted the Navajo Nation primacy for the SDWA Class II UIC program''), is the program administered by the Navajo Nation approved by EPA pursuant to section 1425 of the SDWA. Notice of this approval was published in the FEDERAL REGISTER on November 4, 2008; the effective date of this program is December 4, 2008. This program consists of the following elements as submitted to EPA in the Navajo Nation's program application:

(a) *Incorporation by reference*. The requirements set forth in the Navajo Nation Statutes, Regulations and Resolution notebook, dated October 2008, are hereby incorporated by reference and made part of the applicable UIC program under the SDWA for Class II injection wells on Navajo Indian lands for which EPA has granted the Navajo Nation primacy for the SDWA Class II UIC program (as defined in this section). This incorporation by reference was approved by the Director of the Federal Register in accordance with 5 U.S.C. 552(a) and 1 CFR part 51. Copies may be obtained or inspected at the Navajo Nation Environmental Protection Agency UIC Office, Old NAPA Auto Parts Building (Tribal Bldg. #S009–080), Highway 64, Shiprock, New Mexico 87420 (505–368–1040), at the Environmental Protection Agency, Region 9, 75 Hawthorne Street, San Francisco, California 94105–3920 (415–972–3533), or at the National Archives and Records Administration (NARA). For information on the availability of this material at NARA, call (202) 741–6030, or go to: *http://www.archives.gov/federal_register/code_of_federal_regulations/ibr_locations.html*.

(b) *Memorandum of Agreement (MOA)*. The MOA between EPA Region 9 and the Navajo Nation, signed by the EPA Regional Administrator on August 21, 2001. The Criminal Enforcement MOA between EPA Region 9 and the Navajo Nation, signed by EPA on October 30, 2006.

(c) *Statement of legal authority*. (1) ''Statement of the Attorney General of the Navajo Nation Pursuant to 40 CFR 145.24'', August 27, 2001.

(2) ''Statement of the Attorney General of the Navajo Nation Regarding the Regulatory Authority and Jurisdiction of the Navajo Nation with Respect To Its Underground Injection Control Program'', July 3, 2002.

(3) ''Supplemental Statement of the Navajo Nation Attorney General Regarding the Regulatory Authority and Jurisdiction of the Navajo Nation to Operate an Underground Injection Control Program under the Safe Drinking Water Act'', October 11, 2006.

(d) *Program Description*. The Program Description submitted as part of the Navajo Nation's application, and any other materials submitted as part of this application or as a supplement thereto.

[73 FR 65565, Nov. 4, 2008]

PART 148—HAZARDOUS WASTE INJECTION RESTRICTIONS

Subpart A—General

Sec.
148.1 Purpose, scope and applicability.
148.2 Definitions.
148.3 Dilution prohibited as a substitute for treatment.
148.4 Procedures for case-by-case extensions to an effective date.
148.5 Waste analysis.

Subpart B—Prohibitions on Injection

148.10 Waste specific prohibitions—solvent wastes.
148.11 Waste specific prohibitions—dioxin-containing wastes.
148.12 Waste specific prohibitions—California list wastes.
148.14 Waste specific prohibitions—first third wastes.
148.15 Waste specific prohibitions—second third wastes.
148.16 Waste specific prohibitions—third third wastes.
148.17 Waste specific prohibitions; newly listed wastes.
148.18 Waste specific prohibitions-newly listed and identified wastes.

Subpart C—Petition Standards and Procedures

148.20 Petitions to allow injection of a waste prohibited under subpart B.
148.21 Information to be submitted in support of petitions.
148.22 Requirements for petition submission, review and approval or denial.
148.23 Review of exemptions granted pursuant to a petition.
148.24 Termination of approved petition.

AUTHORITY: Secs. 3004, Resource Conservation and Recovery Act, 42 U.S.C. 6901 *et seq.*

SOURCE: 53 FR 28154, July 26, 1988, unless otherwise noted.

Subpart A—General

§ 148.1 Purpose, scope and applicability.

(a) This part identifies wastes that are restricted from disposal into Class I wells and defines those circumstances under which a waste, otherwise prohibited from injection, may be injected.

(b) The requirements of this part apply to owners or operators of Class I hazardous waste injection wells used to inject hazardous waste.

(c) Wastes otherwise prohibited from injection may continue to be injected:

(1) If an extension from the effective date of a prohibition has been granted pursuant to § 148.4 with respect to such wastes; or

(2) If an exemption from a prohibition has been granted in response to a petition filed under § 148.20 to allow injection of restricted wastes with respect to those wastes and wells covered by the exemption; or

(3) If the waste is generated by a conditionally exempt small quantity generator, as defined in § 261.5; or

(d) Wastes that are hazardous only because they exhibit a hazardous characteristic, and which are otherwise prohibited under this part, or part 268 of this chapter, are not prohibited if the wastes:

(1) Are disposed into a nonhazardous or hazardous injection well as defined under 40 CFR § 146.6(a); and

(2) Do not exhibit any prohibited characteristic of hazardous waste identified in 40 CFR part 261, subpart C at the point of injection.

[53 FR 28154, July 26, 1988, as amended at 55 FR 22683, June 1, 1990; 57 FR 8088, Mar. 6, 1992; 57 FR 31763, July 20, 1992; 60 FR 33932, June 29, 1995; 61 FR 15596, Apr. 8, 1996; 61 FR 33682, June 28, 1996]

§ 148.2 Definitions.

Injection interval means that part of the injection zone in which the well is screened, or in which the waste is otherwise directly emplaced.

Transmissive fault or fracture is a fault or fracture that has sufficient permeability and vertical extent to allow fluids to move between formations.

§ 148.3 Dilution prohibited as a substitute for treatment.

The prohibition of § 268.3 shall apply to owners or operators of Class I hazardous waste injection wells.

§ 148.4 Procedures for case-by-case extensions to an effective date.

The owner or operator of a Class I hazardous waste injection well may submit an application to the Administrator for an extension of the effective date of any applicable prohibition established under subpart B of this part according to the procedures of § 268.5.

§ 148.5 Waste analysis.

Generators of hazardous wastes that are disposed of into Class I injection wells must comply with the applicable requirements of § 268.7 (a) and (b). Owners or operators of Class I hazardous waste injection wells must comply with the applicable requirements of § 268.7(c).

Subpart B—Prohibitions on Injection

§ 148.10 Waste specific prohibitions—solvent wastes.

(a) Effective August 8, 1988, the spent solvent wastes specified in § 261.31 as EPA Hazardous Waste Nos. F001, F002, F003, F004, and F005 are prohibited from underground injection unless the solvent waste is a solvent-water mixture or solvent-containing sludge containing less than 1 percent total F001–F005 solvent constituents listed in Table A of this section.

(b) Effective August 8, 1990, all spent F001–F005 solvent wastes containing less than 1 percent total F001–F005 solvent constituents listed in Table A of this section are prohibited from injection.

(c) Effective August 8, 1990, all spent F002 and F005 wastes containing solvent constituents listed in Table B of this section are prohibited from underground injection at off-site injection facilities.

(d) Effective November 8, 1990, the wastes specified in paragraph (c) of this section are prohibited from underground injection at on-site injection facilities.

(e) The requirements of paragraphs (a) and (b) of this section do not apply:

(1) If the wastes meet or are treated to meet the applicable standards specified in subpart D of part 268; or

(2) If an exemption from a prohibition has been granted in response to a petition under subpart C of this part; or

(3) During the period of extension of the applicable effective date, if an extension has been granted under §148.4 of this part.

TABLE A

Acetone
n-Butyl alcohol
Carbon disulfide
Carbon tetrachloride
Chlorobenzene
Cresols and cresylic acid
Cyclohexanone
1,2-dichlorobenzene
Ethyl acetate
Ethyl benzene
Ethyl ether
Isobutanol
Methanol
Methylene chloride
Methylene chloride (from the pharmaceutical industry)
Methyl ethyl ketone
Methyl isobutyl ketone
Nitrobenzene
Pyridine
Tetrachloroethylene
Toulene
1,1,1-Trichloroethane
1,2,2-Trichloro-1,2,2-trifluoroethane
Trichloroethylene
Trichlorofluoromethane
Xylene

TABLE B

Benzene
2-Ethoxyethanol
2-Nitropropane
1,1,2-Trichloroethane

[53 FR 28154, July 26, 1988, as amended at 54 FR 25422, June 14, 1989; 56 FR 3876, Jan. 31, 1991; 57 FR 8088, Mar. 6, 1992]

§148.11 Waste specific prohibitions—dioxin-containing wastes.

(a) Effective August 8, 1988, the dioxin-containing wastes specified in §261.31 as EPA Hazardous Waste Nos. F020, F021, F022, F023, F026, F027, and F028, and prohibited from underground injection.

(b) The requirements of paragraph (a) of this section do not apply:

(1) If the wastes meet or are treated to meet the applicable standards specified in subpart D of part 268; or

(2) If an exemption from a prohibition has been granted in response to a petition under subpart C of this part; or

(3) During the period of extension of the applicable effective date, if an extension has been granted under §148.4 of this part.

[53 FR 28154, July 26, 1988, as amended at 54 FR 25422, June 14, 1989]

§148.12 Waste specific prohibitions—California list wastes.

(a) Effective August 8, 1988, the hazardous wastes listed in 40 CFR 268.32 containing polychlorinated biphenyls at concentrations greater than or equal to 50 ppm or halogenated organic compounds at concentrations greater than or equal to 10,000 mg/kg are prohibited from underground injection.

(b) Effective August 8, 1990, the following hazardous wastes are prohibited from underground injection:

(1) Liquid hazardous wastes, including free liquids associated with any solid or sludge, containing free cyanides at concentrations greater than or equal to 1,000 mg/l;

(2) Liquid hazardous wastes, including free liquids associated with any solid or sludge, containing the following metals (or elements) or compounds of these metals (or elements) at concentrations greater than or equal to those specified below:

(i) Arsenic and/or compounds (as As) 500 mg/l;

(ii) Cadmium and/or compounds (as Cd) 100 mg/l;

(iii) Chromium (VI) and/or compounds (as Cr VI) 500 mg/l;

(iv) Lead and/or compounds (as Pb) 500 mg/l;

(v) Mercury and/or compounds (as Hg) 20 mg/l;

(vi) Nickel and/or compounds (as Ni) 134 mg/l;

(vii) Selenium and/or compounds (as Se) 100 mg/l; and

(viii) Thallium and/or compounds (as Tl) 130 mg/l;

(3) Liquid hazardous waste having a pH less than or equal to two (2.0); and

(4) Hazardous wastes containing halogenated organic compounds in total concentration less than 10,000 mg/kg but greater than or equal to 1,000 mg/kg.

(c) The requirements of paragraphs (a) and (b) of this section do not apply:

(1) If the wastes meet or are treated to meet the applicable standards specified in subpart D of part 268; or

(2) If an exemption from a prohibition has been granted in response to a petition under subpart C of this part; or

(3) During the period of extension of the applicable effective date, if an extension is granted under § 148.4 of this part.

[53 FR 30918, Aug. 16, 1988, as amended at 53 FR 41602, Oct. 24, 1988]

§ 148.14 Waste specific prohibitions—first third wastes.

(a) Effective June 7, 1989, the wastes specified in 40 CFR 261.31 as EPA Hazardous Waste numbers F006 (nonwastewaters) and the wastes specified in 40 CFR 261.32 as EPA Hazardous Waste numbers K001, K015 (wastewaters), K016 (at concentrations greater than or equal to 1%), K018, K019, K020, K021 (nonwastewaters generated by the process described in the waste listing description and disposed after August 17, 1988, and not generated in the course of treating wastewater forms of these wastes), K022 (nonwastewaters), K024, K030, K036 (nonwastewaters generated by the process described in the waste listing description and disposed after August 17, 1988, and not generated in the course of treating wastewater forms of these wastes), K037, K044, K045, nonexplosive K046 (nonwastewaters), K047, K048, K060 (nonwastewaters generated by the process described in the waste listing description and disposed after August 17, 1988, and not generated in the course of treating wastewater forms of these wastes), K061 (nonwastewaters), noncalcium sulfate K069 (nonwastewaters generated by the process described in the waste listing description and disposed after August 17, 1988, and not generated in the course of treating wastewater forms of these wastes), K086 solvent washes, K087, K099, K101 (all wastewaters and less than 1% total arsenic nonwastewaters), K102 (all wastewaters and less than 1% total arsenic nonwastewaters), and K103 are prohibited from underground injection.

(b) Effective June 8, 1989, the waste specified in 40 CFR 261.32 as EPA Hazardous Waste number K036 (wastewaters); and the wastes specified in 40 CFR 261.33 as P030, P039, P041, P063, P071, P089, P094, P097, U221, and U223 are prohibited from underground injection.

(c) Effective July 8, 1989, the wastes specified in 40 CFR 261.31 as EPA Hazardous Waste numbers F008 and F009 are prohibited from underground injection.

(d) Effective August 8, 1990, the wastes specified in 40 CFR 261.31 as EPA Hazardous Waste Number F006 (wastewaters) and F019; the wastes specified in 40 CFR 261.32 as EPA Hazardous Waste Numbers K004, K008, K015 (nonwastewaters), K017, K021 (wastewaters), K022 (wastewaters), K031, K035, K046 (reactive nonwastewaters and all wastewaters), K060 (wastewaters), K061 (wastewaters), K069 (calcium sulfate nonwastewaters and all wastewaters), K073, K083, K084, K085, K086 (all but solvent washes), K101 (high arsenic nonwastewaters), K102 (high arsenic nonwastewaters), and K106; and the wastes specified in 40 CFR part 261.33 as EPA Hazardous Waste Numbers P001, P004, P005, P010, P011, P012, P015, P016, P018, P020, P036, P037, P048, P050, P058, P059, P068, P069, P070, P081, P082, P084, P087, P092, P102, P105, P108, P110, P115, P120, P122, P123, U007, U009, U010, U012, U016, U018, U019, U022, U029, U031, U036, U037, U041, U043, U044, U046, U050, U051, U053, U061, U063, U064, U066, U067, U074, U077, U078, U086,

U089, U103, U105, U108, U115, U122, U124, U129, U130, U133, U134, U137, U151, U154, U155, U157, U158, U159, U171, U177, U180, U185, U188, U192, U200, U209, U210, U211, U219, U220, U226, U227, U228, U237, U238, U248, and U249 are prohibited from underground injection at off-site injection facilities.

(e) Effective August 8, 1990, the wastes specified in 40 CFR 261.32 as EPA Hazardous Waste numbers K049, K050, K051, K052, K062, K071, and K104 are prohibited from underground injection.

(f) Effective November 8, 1990, the wastes specified in paragraph (d) of this section are prohibited from underground injection at on-site injection facilities.

(g) Effective June 7, 1991, the wastes specified in 40 CFR 261.32 as EPA Hazardous Waste numbers K016 (at concentrations less than 1%) are prohibited from underground injection.

(h) Effective June 8, 1991, the waste specified in 40 CFR 261.31 as EPA Hazardous Waste number F007; and the wastes specified in 40 CFR 261.32 as K011 (nonwastewaters) and K013 (nonwastewaters) are prohibited from underground injection.

(i) Effective May 8, 1992, the wastes specified in 40 CFR 261.32 and 261.33 as EPA Hazardous Waste Numbers K011 (wastewaters), K013 (wastewaters), and K014 are prohibited from underground injection.

(j) The requirements of paragraphs (a) through (i) of this section do not apply:

(1) If the wastes meet or are treated to meet the applicable standards specified in subpart D of part 268; or

(2) If an exemption from a prohibition has been granted in response to a petition under subpart C of this part; or

(3) During the period of extension of the applicable effective date, if an extension has been granted under § 148.4 of this part.

[54 FR 25423, June 14, 1989, as amended at 54 FR 26647, June 23, 1989; 54 FR 35328, Aug. 25, 1989; 55 FR 22683, June 1, 1990]

§ 148.15 Waste specific prohibitions—second third wastes.

(a) Effective June 7, 1989, the wastes specified in 40 CFR 261.32 as EPA Hazardous Waste numbers K025 (nonwastewaters generated by the process described in the waste listing description and disposed after August 17, 1988, and not generated in the course of treating wastewater forms of these wastes) are prohibited from underground injection.

(b) Effective June 8, 1989, the wastes specified in 40 CFR 261.31 as EPA Hazardous Waste numbers F010, F024; the wastes specified in 40 CFR 261.32 as K009 (nonwastewaters), K010, K027, K028, K029 (nonwastewaters), K038, K039, K040, K043, K095 (nonwastewaters), K096 (nonwastewaters), K113, K114, K115, K116; and wastes specified in 40 CFR 261.33 as P029, P040, P043, P044, P062, P074, P085, P098, P104, P106, P111, U028, U058, U107, and U235 are prohibited from underground injection.

(c) Effective July 8, 1989, and continuing until December 8, 1989, the wastes specified in 40 CFR 261.31 as EPA Hazardous Waste numbers F011 and F012 are prohibited from underground injection pursuant to the treatment standards specified in §§ 268.41 and 268.43 applicable to F007, F008, and F009 wastewaters and nonwastewaters. Effective December 8, 1989, F011 (nonwastewaters) and F012 (nonwastewaters) are prohibited pursuant to the treatment standards specified in §§ 268.41 and 268.43 applicable to F011 and F012 wastewaters and nonwastewaters.

(d) Effective August 8, 1990, the wastes specified in 40 CFR 261.32 as EPA Hazardous Waste Number K025 (wastewaters), K029 (wastewaters), K041, K042, K095 (wastewaters), K096 (wastewaters), K097, K098, and K105; and the wastes specified in 40 CFR part 261.33 as P002, P003, P007, P008, P014, P026, P027, P049, P054, P057, P060, P066, P067, P072, P107, P112, P113, P114, U002, U003, U005, U008, U011, U014, U015, U020, U021, U023, U025, U026, U032, U035, U047, U049, U057, U059, U060, U062, U070, U073, U080, U083, U092, U093, U094, U095, U097, U098, U099, U101, U106, U109, U110, U111, U114, U116, U119, U127, U128, U131, U135, U138, U140, U142, U143, U144, U146, U147, U149, U150, U161, U162, U163, U164, U165, U168, U169, U170, U172, U173, U174, U176, U178, U179, U189, U193, U196, U203, U205, U206, U208, U213, U214, U215, U216, U217,

U218, U239, and U244 are prohibited from underground injection at off-site injection facilities.

(e) Effective June 8, 1991, the waste specified in 40 CFR 261.32 as EPA Hazardous Waste number K009 (wastewaters) is prohibited from underground injection.

(f) Effective November 8, 1990, the wastes specified in paragraph (d) of this section are prohibited from underground injection at on-site injection facilities.

(g) The requirements of paragraphs (a) through (f) of this section do not apply:

(1) If the wastes meet or are treated to meet the applicable standards specified in subpart D of part 268; or

(2) If an exemption from a prohibition has been granted in response to a petition under subpart C of this part; or

(3) During the period of extension of the applicable effective date, if an extension has been granted under §148.4 of this part.

[54 FR 25423, June 14, 1989, as amended at 54 FR 26647, June 23, 1989; 55 FR 22683, June 1, 1990]

§148.16 Waste specific prohibitions—third third wastes.

(a) Effective June 7, 1989, the wastes specified in 40 CFR 261.32 as EPA Hazardous Waste numbers K100 (nonwastewaters generated by the process described in the waste listing description and disposed after August 17, 1988, and not generated in the course of treating wastewater forms of these wastes) are prohibited from underground injection.

(b) Effective June 8, 1989, the wastes specified in 40 CFR 261.32 as EPA Hazardous Waste numbers K005 (nonwastewaters), K007 (nonwastewaters), K023, K093, K094; and the wastes specified in 40 CFR 261.33 as P013, P021, P099, P109, P121, U069, U087, U088, U102, and U190 are prohibited from underground injection.

(c) Effective August 8, 1990, the wastes identified in 40 CFR 261.31 as EPA Hazardous Waste Number F039 (nonwastewaters); the wastes specified in 40 CFR 261.32 as EPA Hazardous Waste Numbers K002, K003, K005 (wastewaters), K006, K007 (wastewaters), K026, K032, K033, K034, and K100 (wastewaters); the wastes specified in 40 CFR 261.33 as P006, P009, P017, P022, P023, P024, P028, P031, P033, P034, P038, P042, P045, P046, P047, P051, P056, P064, P065, P073, P075, P076, P077, P078, P088, P093, P095, P096, P101, P103, P116, P118, P119, U001, U004, U006, U017, U024, U027, U030, U033, U034, U038, U039, U042, U045, U048, U052, U055, U056, U068, U071, U072, U075, U076, U079, U081, U082, U084, U085, U090, U091, U096, U112, U113, U117, U118, U120, U121, U123, U125, U126, U132, U136, U141, U145, U148, U152, U153, U156, U160, U166, U167, U181, U182, U183, U184, U186, U187, U191, U194, U197, U201, U202, U204, U207, U222, U225, U234, U236, U240, U243, U246, and U247; and the wastes identified in 40 CFR 261.21, 261.23 or 261.24 as hazardous based on a characteristic alone, designated as D001, D004, D005, D006, D008, D009 (wastewaters), D010, D011, D012, D013, D014, D015, D016, D017, and newly listed waste F025 are prohibited from underground injection at off-site injection facilities.

(d) Effective August 8, 1990, mixed radioactive/hazardous waste in 40 CFR 268.10, 268.11, and 268.12, that are mixed radioactive and hazardous wastes, are prohibited from underground injection.

(e) Effective November 8, 1990, the wastes specified in paragraph (c) of this section are prohibited from underground injection at on-site injection facilities. These effective dates do not apply to the wastes listed in 40 CFR 148.12(b) which are prohibited from underground injection on August 8, 1990.

(f) Effective May 8, 1992, the waste identified in 40 CFR 261.31 as EPA Hazardous Waste Number F039 (wastewaters); the wastes identified in 40 CFR 261.22, 261.23 or 261.24 as hazardous based on a characteristic alone, designated as D002 (wastewaters and nonwastewaters), D003 (wastewaters and nonwastewaters), D007 (wastewaters and nonwastewaters), and D009 (nonwastewaters) are prohibited from underground injection. These effective dates do not apply to the wastes listed in 40 CFR 148.12(b) which are prohibited from underground injection on August 8, 1990.

(g) The requirements of paragraphs (a) through (f) of this section do not apply:

(1) If the wastes meet or are treated to meet the applicable standards specified in subpart D of part 268; or

(2) If an exemption from a prohibition has been granted in response to a petition under subpart C of this part; or

(3) During the period of extension of the applicable effective date, if an extension has been granted under § 148.4 of this part.

[54 FR 25423, June 14, 1989, as amended at 54 FR 26647, June 23, 1989; 55 FR 22683, June 1, 1990; 55 FR 33694, Aug. 17, 1990; 56 FR 3876, Jan. 31, 1991]

§ 148.17 Waste specific prohibitions; newly listed wastes.

(a) Effective November 9, 1992, the wastes specified in 40 CFR part 261 as EPA hazardous waste numbers F037, F038, K107, K108, K109, K110, K111, K112, K117, K118, K123, K124, K125, K126, K131, K136, U328, U353, and U359 are prohibited from underground injection.

(b) Effective December 19, 1994 the wastes specified in 40 CFR 261.32 as EPA Hazardous waste numbers K141, K142, K143, K144, K145, K147, K148, K149, K150, and K151, are prohibited from underground injection.

(c) [Reserved]

(d) Effective June 30, 1995, the wastes specified in 40 CFR part 261 as EPA Hazardous waste numbers K117, K118, K131, and K132 are prohibited from underground injection.

(e) The requirements of paragraphs (a) and (b) of this section do not apply:

(1) If the wastes meet or are treated to meet the applicable standards specified in subpart D of part 268; or

(2) If an exemption from a prohibition has been granted in response to a petition under subpart C of this part; or

(3) During the period of extension of the applicable effective date, if an extension has been granted under § 148.4 of this part.

[57 FR 37263, Aug. 18, 1992, as amended at 59 FR 48041, Sept. 19, 1994; 61 FR 15662, Apr. 8, 1996]

§ 148.18 Waste specific prohibitions—newly listed and identified wastes.

(a) Effective August 24, 1998, all newly identified D004–D011 wastes and characteristic mineral processing wastes, except those identified in paragraph (b) of this section, are prohibited from underground injection.

(b) Effective May 26, 2000, characteristic hazardous wastes from titanium dioxide mineral processing, and radioactive wastes mixed with newly identified D004–D011 or mixed with newly identified characteristic mineral processing wastes, are prohibited from underground injection.

(c) Effective August 11, 1997, the wastes specified in 40 CFR part 261 as EPA Hazardous waste numbers F032, F034, F035 are prohibited from underground injection.

(d) Effective May 12, 1999, the wastes specified in 40 CFR part 261 as EPA Hazardous waste numbers F032, F034, F035 that are mixed with radioactive wastes are prohibited from underground injection.

(e) On July 8, 1996, the wastes specified in 40 CFR 261.32 as EPA Hazardous waste numbers K156–K161, P127, P128, P185, P188–P192, P194, P196–P199, P201–P205, U271, U277–U280, U364–U367, U372, U373, U375–U379, U381–387, U389–U396, U400–U404, U407, and U409–U411 are prohibited from underground injection.

(f) On January 8, 1997, the wastes specified in 40 CFR 261.32 as EPA Hazardous waste number K088 is prohibited from underground injection.

(g) On April 8, 1998, the wastes specified in 40 CFR part 261 as EPA Hazardous waste numbers D018–043, and Mixed TC/Radioactive wastes, are prohibited from underground injection.

(h) [Reserved]

(i) Effective February 8, 1999, the wastes specified in 40 CFR 261.32 as EPA Hazardous Waste Numbers K169, K170, K171, and K172 are prohibited from underground injection.

(j) Effective May 8, 2001, the wastes specified in 40 CFR 261.32 as EPA Hazardous Waste Numbers K174 and K175 are prohibited from underground injection.

(k) Effective May 20, 2002, the wastes specified in 40 CFR 261.32 as EPA Hazardous Waste Numbers K176, K177, and K178 are prohibited from underground injection.

(l) Effective August 23, 2005, the waste specified in 40 CFR 261.32 as EPA Hazardous Waste Number K181 is prohibited from underground injection.

(m) The requirements of paragraphs (a) through (l) of this section do not apply:

(1) If the wastes meet or are treated to meet the applicable standards specified in subpart D of 40 CFR part 268; or

(2) If an exemption from a prohibition has been granted in response to a petition under subpart C of this part; or

(3) During the period of extension of the applicable effective date, if an extension has been granted under § 148.4.

[61 FR 15662, Apr. 8, 1996, as amended at 62 FR 26018, May 12, 1997; 63 FR 24624, May 4, 1998; 63 FR 28636, May 26, 1998; 63 FR 35149, June 29, 1998; 63 FR 42184, Aug. 6, 1998; 65 FR 14474, Mar. 17, 2000; 65 FR 36366, June 8, 2000; 65 FR 67126, Nov. 8, 2000; 66 FR 58297, Nov. 20, 2001; 70 FR 9174, Feb. 24, 2005]

Subpart C—Petition Standards and Procedures

§ 148.20 Petitions to allow injection of a waste prohibited under subpart B.

(a) Any person seeking an exemption from a prohibition under subpart B of this part for the injection of a restricted hazardous waste into an injection well or wells shall submit a petition to the Director demonstrating that, to a reasonable degree of certainty, there will be no migration of hazardous constituents from the injection zone for as long as the waste remains hazardous. This demonstration requires a showing that:

(1) The hydrogeological and geochemical conditions at the sites and the physiochemical nature of the waste stream(s) are such that reliable predictions can be made that:

(i) Fluid movement conditions are such that the injected fluids will not migrate within 10,000 years:

(A) Vertically upward out of the injection zone; or

(B) Laterally within the injection zone to a point of discharge or interface with an Underground Source of Drinking Water (USDW) as defined in 40 CFR part 146; or

(ii) Before the injected fluids migrate out of the injection zone or to a point of discharge or interface with USDW, the fluid will no longer be hazardous because of attenuation, transformation, or immobilization of hazardous constituents within the injection zone by hydrolysis, chemical interactions or other means; and

(2) For each well the petition has:

(i) Demonstrated that the injection well's area of review complies with the substantive requirements of § 146.63;

(ii) Located, identified, and ascertained the condition of all wells within the injection well's area of review (as specified in § 146.63) that penetrate the injection zone or the confining zone by use of a protocol acceptable to the Director that meets the substantive requirements of § 146.64;

(iii) Submitted a corrective action plan that meets the substantive requirements of § 146.64, the implementation of which shall become a condition of petition approval; and

(iv) Submitted the results of pressure and radioactive tracer tests performed within one year prior to submission of the petition demonstrating the mechanical integrity of the well's long string casing, injection tube, annular seal, and bottom hole cement. In cases where the petition has not been approved or denied within one year after the initial demonstration of mechanical integrity, the Director may require the owner or operator to perform the tests again and submit the results of the new tests.

NOTE: The requirements of § 148.20(a)(2) need not be incorporated in a permit at the time of petition approval.

(b) A demonstration under § 148.20(a)(1)(i) shall identify the strata within the injection zone which will confine fluid movement above the injection interval and include a showing that this strata is free of known transmissive faults of fractures and that there is a confining zone above the injection zone.

(c) A demonstration under § 148.20(a)(1)(ii) shall identify the strata within the injection zone where waste transformation will be accomplished and include a showing that this strata is free of known transmissive faults or fractures and that there is a confining zone above the injection zone.

(d) A demonstration may include a showing that:

(1) Treatment methods, the implementation of which shall become a

condition of petition approval, will be utilized that reduce the toxicity or mobility of the wastes; or

(2) A monitoring plan, the implementation of which shall become a condition of petition approval, will be utilized to enhance confidence in one or more aspects of the demonstration.

(e) Any person who has been granted an exemption pursuant to this section may submit a petition for reissuance of the exemption to include an additional restricted waste or wastes or to modify any conditions placed on the exemption by the Director. The Director shall reissue the petition if the petitioner complies with the requirements of paragraphs (a), (b) and (c) of this section.

(f) Any person who has been granted an exemption pursuant to this section may submit a petition to modify an exemption to include an additional (hazardous) waste or wastes. The Director may grant the modification if he determines, to a reasonable degree of certainty, that the additional waste or wastes will behave hydraulically and chemically in a manner similar to previously included wastes and that it will not interfere with the containment capability of the injection zone.

§ 148.21 Information to be submitted in support of petitions.

(a) Information submitted in support of § 148.20 must meet the following criteria:

(1) All waste analysis and any new testing performed by the petitioner shall be accurate and reproducible and performed in accordance with quality assurance standards;

(2) Estimation techniques shall be appropriate, and EPA-certified test protocols shall be used where available and appropriate;

(3) Predictive models shall have been verified and validated, shall be appropriate for the specific site, waste streams, and injection conditions of the operation, and shall be calibrated for existing sites where sufficient data are available;

(4) An approved quality assurance and quality control plan shall address all aspects of the demonstration;

(5) Reasonably conservative values shall be used whenever values taken from the literature or estimated on the basis of known information are used instead of site-specific measurements; and

(6) An analysis shall be performed to identify and assess aspects of the demonstration that contribute significantly to uncertainty. The petitioner shall conduct a sensitivity analysis to determine the effect that significant uncertainty may contribute to the demonstration. The demonstration shall then be based on conservative assumptions identified in the analysis.

(b) Any petitioner under § 148.20(a)(1)(i) shall provide sufficient site-specific information to support the demonstration, such as:

(1) Thickness, porosity, permeability and extent of the various strata in the injection zone;

(2) Thickness, porosity, permeability, extent, and continuity of the confining zone;

(3) Hydraulic gradient in the injection zone;

(4) Hydrostatic pressure in the injection zone; and

(5) Geochemical conditions of the site.

(c) In addition to the information in § 148.21(b), any petitioner under § 148.20(a)(1)(ii) shall provide sufficient waste-specific information to ensure reasonably reliant predictions about the waste transformation. The petitioner shall provide the information necessary to support the demonstration, such as:

(1) Description of the chemical processes or other means that will lead to waste transformation; and

(2) Results of laboratory experiments verifying the waste transformation.

§ 148.22 Requirements for petition submission, review and approval or denial.

(a) Any petition submitted to the Director pursuant to § 148.20(a) shall include the following components:

(1) An identification of the specific waste or wastes and the specific injection well or wells for which the demonstration will be made;

(2) A waste analysis to describe fully the chemical and physical characteristics of the subject wastes;

(3) Such additional information as is required by the Director to support the petition under §§ 148.20 and 148.21; and

(4) This statement signed by the petitioner or an authorized representative:

I certify under penalty of law that I have personally examined and am familiar with the information submitted in this petition and all attached documents, and that, based on my inquiry of those individuals immediately responsible for obtaining the information, I believe that submitted information is true, accurate, and complete. I am aware that there are significant penalties for submitting false information, including the possibility of fine and imprisonment.

(b) The Director shall provide public notice and an opportunity for public comment in accordance with the procedures in § 124.10 of the intent to approve or deny a petition. The final decision on a petition will be published in the FEDERAL REGISTER.

(c) If an exemption is granted it will apply only to the underground injection of the specific restricted waste or wastes identified in the petition into a Class I hazardous waste injection well or wells specifically identified in the petition (unless the exemption is modified or reissued pursuant to § 148.20(e) or (f).

(d) Upon request by any petitioner who obtains an exemption for a well under this subpart, the Director shall initiate and reasonably expedite the necessary procedures to issue or reissue a permit or permits for the hazardous waste well or wells covered by the exemption for a term not to exceed ten years.

§ 148.23 Review of exemptions granted pursuant to a petition.

(a) When considering whether to reissue a permit for the operation of a Class I hazardous waste injection well, the Director shall review any petition filed pursuant to § 148.20 and require a new demonstration if information shows that the basis for granting the exemption may no longer be valid.

(b) Whenever the Director determines that the basis for approval of a petition may no longer be valid, the Director shall require a new demonstration in accordance with § 148.20.

§ 148.24 Termination of approved petition.

(a) The Director may terminate an exemption granted under § 148.20 for the following causes:

(1) Noncompliance by the petitioner with any condition of the exemption;

(2) The petitioner's failure in the petition or during the review and approval to disclose fully all relevant facts, or the petitioner's misrepresentation of any relevant facts at any time; or

(3) A determination that new information shows that the basis for approval of the petition is no longer valid.

(b) The Director shall terminate an exemption granted under § 148.20 for the following causes:

(1) The petitioner's willful withholding during the review and approval of the petition of facts directly and materially relevant to the Director's decision on the petition;

(2) A determination that there has been migration from the injection zone or the well that is not in accordance with the terms of the exemption, except that the Director may at his discretion decide not to terminate where:

(i) The migration resulted from a mechanical failure of the well that can be corrected promptly through a repair to the injection well itself or from an undetected well or conduit that can be plugged promptly; and

(ii) The requirements of § 146.67(i) are satisfied.

(c) The Director shall follow the procedures in § 124.5 in terminating any exemption under this section.

PART 149—SOLE SOURCE AQUIFERS

Subpart A—Criteria for Identifying Critical Aquifer Protection Areas

Sec.
149.1 Purpose.
149.2 Definitions.
149.3 Critical Aquifer Protection Areas.

Subpart B—Review of Projects Affecting the Edwards Underground Reservoir, A Designated Sole Source Aquifer in the San Antonio, Texas Area

149.100 Applicability.
149.101 Definitions.

149.102 Project review authority.
149.103 Public information.
149.104 Submission of petitions.
149.105 Decision to review.
149.106 Notice of review.
149.107 Request for information.
149.108 Public hearing.
149.109 Decision under section 1424(e).
149.110 Resubmittal of redesigned projects.
149.111 Funding to redesigned projects.

AUTHORITY: Sec. 1424(e), Safe Drinking Water Act (42 U.S.C. 300h–3(e); sec. 1427 of the Safe Drinking Water Act, (42 U.S.C. 300h–6).

Subpart A—Criteria for Identifying Critical Aquifer Protection Areas

SOURCE: 52 FR 23986, June 26, 1987, unless otherwise noted.

§ 149.1 Purpose.

The purpose of this subpart is to provide criteria for identifying critical aquifer protection areas, pursuant to section 1427 of the Safe Drinking Water Act (SDWA).

§ 149.2 Definitions.

(a) *Aquifer* means a geological formation, group of formations, or part of a formation that is capable of yielding a significant amount of water to a well or spring.

(b) *Recharge* means a process, natural or artificial, by which water is added to the saturated zone of an aquifer.

(c) *Recharge Area* means an area in which water reaches the zone of saturation (ground water) by surface infiltration; in addition, a *major recharge area* is an area where a major part of the recharge to an aquifer occurs.

(d) *Sole or Principal Source Aquifer* (SSA) means an aquifer which is designated as an SSA under section 1424(e) of the SDWA.

[54 FR 6843, Feb. 14, 1989]

§ 149.3 Critical Aquifer Protection Areas.

A Critical Aquifer Protection Area is either:

(a) All or part of an area which was designated as a sole or principal source aquifer prior to June 19, 1986, and for which an areawide ground-water quality protection plan was approved, under section 208 of the Clean Water Act, prior to that date; or

(b) All or part of a major recharge area of a sole or principal source aquifer, designated before June 19, 1988, for which:

(1) The sole or principal source aquifer is particularly vulnerable to contamination due to the hydrogeologic characteristics of the unsaturated or saturated zone within the suggested critical aquifer protection area; and

(2) Contamination of the sole or principal source aquifer is reasonably likely to occur, unless a program to reduce or prevent such contamination is implemented; and

(3) In the absence of any program to reduce or prevent contamination, reasonably foreseeable contamination would result in significant cost, taking into account:

(i) The cost of replacing the drinking water supply from the sole or principal source aquifer, and

(ii) Other economic costs and environmental and social costs resulting from such contamination.

[54 FR 6843, Feb. 14, 1989]

Subpart B—Review of Projects Affecting the Edwards Underground Reservoir, A Designated Sole Source Aquifer in the San Antonio, Texas Area

SOURCE: 42 FR 51574, Sept. 29, 1977, unless otherwise noted. Redesignated at 52 FR 23986, June 26, 1987.

§ 149.100 Applicability.

This subpart sets forth, pursuant to sections 1424(e) and 1450 of the Public Health Service Act, as amended by the Safe Drinking Water Act, Pub. L. 93–523, regulations relating the Edwards Underground Reservoir which is the sole or principal drinking water source for the San Antonio area and which, if contaminated, would create a significant hazard to public health.

[42 FR 51574, Sept. 29, 1977. Redesignated and amended at 52 FR 23986, June 26, 1987]

§ 149.101 Definitions.

As used in this subpart and except as otherwise specifically provided, the term(s):

(a) *Act* means the Public Health Service Act, as amended by the Safe Drinking Water Act, Public Law 93–523.

(b) *Contaminant* means any physical, chemical, biological, or radiological substance or matter in water.

(c) *Recharge zone* means the area through which water enters the Edwards Underground Reservoir as defined in the December 16, 1975, Notice of Determination.

(d) *Administrator* (Regional Administrator) means the Administrator (Regional Administrator) of the United States Environmental Protection Agency.

(e) *Person* means an individual, corporation, company, association, partnership, State, or municipality.

(f) *Project* means a program or action for which an application for Federal financial assistance has been made.

(g) *Federal financial assistance* means any financial benefits provided directly as aid to a project by a department, agency, or instrumentality of the Federal government in any form including contracts, grants, and loan guarantees. Actions or programs carried out by the Federal government itself such as dredging performed by the Army Corps of Engineers do not involve Federal financial assistance. Actions performed for the Federal government by contractors, such as construction of roads on Federal lands by a contractor under the supervision of the Bureau of Land Management, should be distinguished from contracts entered into specifically for the purpose of providing financial assistance, and will not be considered programs or actions receiving Federal financial assistance. Federal financial assistance is limited to benefits earmarked for a specific program or action and directly awarded to the program or action. Indirect assistance, e.g., in the form of a loan to a developer by a lending institution which in turn receives Federal assistance not specifically related to the project in question is not Federal financial assistance under section 1424(e).

(h) *Commitment of Federal financial assistance* means a written agreement entered into by a department, agency, or instrumentality of the Federal Government to provide financial assistance as defined in paragraph (g) of this section. Renewal of a commitment which the issuing agency determines has lapsed shall not constitute a new commitment unless the Regional Administrator determines that the project's impact on the aquifer has not been previously reviewed under section 1424(e). The determination of a Federal agency that a certain written agreement constitutes a commitment shall be conclusive with respect to the existence of such a commitment.

(i) *Streamflow source zone* means the upstream headwaters area which drains into the recharge zone as defined in the December 16, 1975, Notice of Determination.

(j) *Significant hazard to public health* means any level of contaminant which causes or may cause the aquifer to exceed any maximum contaminant level set forth in any promulgated National Primary Drinking Water Standard at any point where the water may be used for drinking purposes or which may otherwise adversely affect the health of persons, or which may require a public water system to install additional treatment to prevent such adverse effect.

(k) *Aquifer* means the Edwards Underground Reservoir.

[42 FR 51574, Sept. 29, 1977. Redesignated and amended at 52 FR 23986, June 26, 1987]

§ 149.102 Project review authority.

(a) Once an area is designated, no subsequent commitments of Federal financial assistance may be made to projects which the Administrator determines may contaminate the aquifer so as to create a significant hazard to public health.

(b) The Regional Administrator is hereby delegated the authority and assigned responsibility for carrying out the project review process assigned to the Administrator under section 1424(e) of the Act, except the final determination that a project may contaminate the aquifer through its recharge zone so as to create a significant hazard to public health.

(c) The Regional Administrator may review any project which he considers may potentially contaminate the aquifer through its recharge zone so as to create a significant hazard to public health.

§ 149.103 Public information.

After the area is designated under section 1424(e), Federal agencies, for projects, located in the recharge zone and streamflow source zones, are required to:

(a) Maintain a list of projects for which environmental impact statements will be prepared in accordance with the National Environmental Policy Act (NEPA);

(b) Revise the list at regular intervals and submit to EPA; and

(c) Make the list available to the public upon request.

§ 149.104 Submission of petitions.

Any person may submit a petition requesting the Regional Administrator to review a project to determine if such project may contaminate the aquifer through its recharge zone so as to create a significant hazard to public health. Any such petition shall identify:

(a) The name, address, and telephone number of the individual, organization, or other entity submitting the petition;

(b) A brief statement of the requesting person's interest in the Regional Administrator's determination;

(c) The name of the project and Federal agency involved;

In addition, the petitioner is requested to submit to EPA available information on:

(d) Applicable action already taken by State and local agencies including establishment of regulations to prevent contamination of the aquifer and why, in the petitioner's judgment, the action was inadequate.

(e) Any actions taken under the National Environmental Policy Act and why, in the petitioner's judgment, that action was inadequate in regard to evaluation of potential effect on the aquifer.

(f) The potential contaminants involved;

(g) The means by which the contaminant might enter the aquifer; and

(h) The potential impact of the proposed project.

§ 149.105 Decision to review.

(a) The Regional Administrator shall review under section 1424(e) all projects located in the recharge or streamflow source zone of the aquifer for which a draft or final EIS is submitted which may have an impact on ground water quality and which involve Federal financial assistance as defined in these regulations.

(b) Upon receipt of a public petition, the Regional Administrator shall decide whether the project which is the subject of the petition should be reviewed under section 1424(e).

(c) The Regional Administrator may decide to review a project upon his own motion.

(d) In determining whether to review a project upon receipt of a public petition or upon his own motion, the Regional Administrator shall consider whether the project is likely to directly or indirectly cause contamination of the aquifer through its recharge zone, taking into account any factors he deems relevant, including:

(1) The location of the project, and

(2) The nature of the project.

(e) In determining whether to review a project upon receipt of a public petition or upon his own motion, the Regional Administrator may consult with, or request information from, the Federal agency to which the project application has been made, the applicant seeking Federal assistance, appropriate State and local agencies, and other appropriate persons or entities.

(f) In determining whether to review a project which is the subject of a public petition, the Regional Administrator may request such additional information from the petitioner as he deems necessary.

§ 149.106 Notice of review.

(a) *Notice to Federal agency*. If the Regional Administrator decides upon receipt of a public petition or upon his own motion to review a project under section 1424(e), he shall give written notification of the decision to the Federal agency from which financial assistance is sought. The notification shall include a description and identification of the project.

(b) *Notice to public.* When the Regional Administrator undertakes to review a project pursuant to § 149.13 above, he shall provide public notice of project review by such means as he deems appropriate. The notice shall set forth the availability for public review of all data and information available, and shall solicit comments, data and information with respect to the determination of impact under section 1424(e). The period for public comment shall be 30 days after public notice unless the Regional Administrator extends the period at his discretion or a public hearing is held under § 149.16.

§ 149.107 Request for information.

In reviewing a project under section 1424(e), the Regional Administrator may request any additional information from the funding Federal agency which is pertinent to reaching a decision. If full evaluation of the groundwater impact of a project has not been submitted in accordance with the agency's NEPA procedures, the Regional Administrator may specifically request that the Federal agency submit a groundwater impact evaluation of whether the proposed project may contaminate the aquifer through its recharge zone so as to create a significant hazard to public health.

§ 149.108 Public hearing.

If there is significant public interest, the Regional Administrator may hold a public hearing with respect to any project or projects to be reviewed if he finds that such a hearing is necessary and would be helpful in clarifying the issues. Public hearings held under this section should be coordinated, if possible, with other Federal public hearings held pursuant to applicable laws and regulations. Any such hearing shall be conducted by the Regional Administrator or designee in an informal, orderly and expeditious manner. Where appropriate, limits may be placed upon the time allowed for oral statements, and statements may be required to be submitted in writing. The record will be held open for further public comment for seven (7) days following the close of the public hearing.

§ 149.109 Decision under section 1424(e).

(a) As soon as practicable after the submission of public comments under section 1424(e) and information requested by the Environmental Protection Agency from the originating Federal agency, on the basis of such information as is available to him, the Regional Administrator shall review the project taking all relevant factors into account including:

(1) The extent of possible public health hazard presented by the project;

(2) Planning, design, construction, operation, maintenance and monitoring measures included in the project which would prevent or mitigate the possible health hazard;

(3) The extent and effectiveness of State or local control over possible contaminant releases to the aquifer;

(4) The cumulative and secondary impacts of the proposed project; and

(5) The expected environmental benefits of the proposed project.

(b) After reviewing the available information, the Regional Administrator shall:

(1) Determine that the risk of contamination of the aquifer through the recharge zone so as to create a significant hazard to public health is not sufficiently great so as to prevent commitment of Federal funding to the project; or

(2) Forward the information to the Administrator with his recommendation that the project may contaminate the aquifer through the recharge zone so as to create a significant hazard to public health.

(c) After receiving the available information forwarded by the Regional Administrator, the Administrator shall:

(1) Determine that the risk of contamination of the aquifer through the recharge zone so as to create a significant hazard to public health is not sufficiently great so as to prevent commitment of Federal funding to the project; or

(2) Determine that the project may contaminate the aquifer through the recharge zone so as to create a significant hazard to public health.

(d) Notice of any decisions by the Regional Administrator under paragraph

(b)(1) of this section or by the Administrator under paragraphs (c)(1) and (2) of this section to prevent a commitment of Federal funding shall be published in the FEDERAL REGISTER. Such notices shall include a description of the propsed project, and a statement of decision with an accompanying statement of facts and reasons.

§ 149.110 Resubmittal of redesigned projects.

If a project is redesigned in response to EPA's objections, the applicant for Federal financial assistance or the grantor agency may file a petition with the Regional Administrator for withdrawal of the determination that the project may contaminate the aquifer through the recharge zone so as to create a significant hazard to public health. Any such petition shall demonstrate how the project has been redesigned so as to justify the withdrawal of EPA's objections. If appropriate, the Regional Administrator may request public comments or hold an informal public hearing to consider the petition. After review of pertinent information, the Regional Administrator shall either deny the petition or recommend to the Administrator that the initial determination that a project may contaminate the aquifer be vacated. Upon receipt of a recommendation from the Regional Administrator that a determination be vacated, the Administrator shall either deny the petition or order that the initial determination be vacated. The final decision regarding a petition shall be published in the FEDERAL REGISTER with an accompanying statement of reasons.

§ 149.111 Funding to redesigned projects.

After publication of a decision that a proposed project may contaminate a sole or principal source aquifer in a designated area through its recharge zone so as to create a significant hazard to public health, a commitment for Federal financial assistance may be entered into, if authorized under another provision of law, to plan or redesign such project to assure that it will not so contaminate the aquifer.

FINDING AIDS

A list of CFR titles, subtitles, chapters, subchapters and parts and an alphabetical list of agencies publishing in the CFR are included in the CFR Index and Finding Aids volume to the Code of Federal Regulations which is published separately and revised annually.

Table of CFR Titles and Chapters
Alphabetical List of Agencies Appearing in the CFR
List of CFR Sections Affected

Table of CFR Titles and Chapters

(Revised as of July 1, 2020)

Title 1—General Provisions

I Administrative Committee of the Federal Register (Parts 1—49)
II Office of the Federal Register (Parts 50—299)
III Administrative Conference of the United States (Parts 300—399)
IV Miscellaneous Agencies (Parts 400—599)
VI National Capital Planning Commission (Parts 600—699)

Title 2—Grants and Agreements

SUBTITLE A—OFFICE OF MANAGEMENT AND BUDGET GUIDANCE FOR GRANTS AND AGREEMENTS
I Office of Management and Budget Governmentwide Guidance for Grants and Agreements (Parts 2—199)
II Office of Management and Budget Guidance (Parts 200—299)
SUBTITLE B—FEDERAL AGENCY REGULATIONS FOR GRANTS AND AGREEMENTS
III Department of Health and Human Services (Parts 300—399)
IV Department of Agriculture (Parts 400—499)
VI Department of State (Parts 600—699)
VII Agency for International Development (Parts 700—799)
VIII Department of Veterans Affairs (Parts 800—899)
IX Department of Energy (Parts 900—999)
X Department of the Treasury (Parts 1000—1099)
XI Department of Defense (Parts 1100—1199)
XII Department of Transportation (Parts 1200—1299)
XIII Department of Commerce (Parts 1300—1399)
XIV Department of the Interior (Parts 1400—1499)
XV Environmental Protection Agency (Parts 1500—1599)
XVIII National Aeronautics and Space Administration (Parts 1800—1899)
XX United States Nuclear Regulatory Commission (Parts 2000—2099)
XXII Corporation for National and Community Service (Parts 2200—2299)
XXIII Social Security Administration (Parts 2300—2399)
XXIV Department of Housing and Urban Development (Parts 2400—2499)
XXV National Science Foundation (Parts 2500—2599)
XXVI National Archives and Records Administration (Parts 2600—2699)

Title 2—Grants and Agreements—Continued

Chap.	
XXVII	Small Business Administration (Parts 2700—2799)
XXVIII	Department of Justice (Parts 2800—2899)
XXIX	Department of Labor (Parts 2900—2999)
XXX	Department of Homeland Security (Parts 3000—3099)
XXXI	Institute of Museum and Library Services (Parts 3100—3199)
XXXII	National Endowment for the Arts (Parts 3200—3299)
XXXIII	National Endowment for the Humanities (Parts 3300—3399)
XXXIV	Department of Education (Parts 3400—3499)
XXXV	Export-Import Bank of the United States (Parts 3500—3599)
XXXVI	Office of National Drug Control Policy, Executive Office of the President (Parts 3600—3699)
XXXVII	Peace Corps (Parts 3700—3799)
LVIII	Election Assistance Commission (Parts 5800—5899)
LIX	Gulf Coast Ecosystem Restoration Council (Parts 5900—5999)

Title 3—The President

I	Executive Office of the President (Parts 100—199)

Title 4—Accounts

I	Government Accountability Office (Parts 1—199)

Title 5—Administrative Personnel

I	Office of Personnel Management (Parts 1—1199)
II	Merit Systems Protection Board (Parts 1200—1299)
III	Office of Management and Budget (Parts 1300—1399)
IV	Office of Personnel Management and Office of the Director of National Intelligence (Parts 1400—1499)
V	The International Organizations Employees Loyalty Board (Parts 1500—1599)
VI	Federal Retirement Thrift Investment Board (Parts 1600—1699)
VIII	Office of Special Counsel (Parts 1800—1899)
IX	Appalachian Regional Commission (Parts 1900—1999)
XI	Armed Forces Retirement Home (Parts 2100—2199)
XIV	Federal Labor Relations Authority, General Counsel of the Federal Labor Relations Authority and Federal Service Impasses Panel (Parts 2400—2499)
XVI	Office of Government Ethics (Parts 2600—2699)
XXI	Department of the Treasury (Parts 3100—3199)
XXII	Federal Deposit Insurance Corporation (Parts 3200—3299)
XXIII	Department of Energy (Parts 3300—3399)
XXIV	Federal Energy Regulatory Commission (Parts 3400—3499)
XXV	Department of the Interior (Parts 3500—3599)
XXVI	Department of Defense (Parts 3600—3699)

Title 5—Administrative Personnel—Continued

Chap.	
XXVIII	Department of Justice (Parts 3800—3899)
XXIX	Federal Communications Commission (Parts 3900—3999)
XXX	Farm Credit System Insurance Corporation (Parts 4000—4099)
XXXI	Farm Credit Administration (Parts 4100—4199)
XXXIII	U.S. International Development Finance Corporation (Parts 4300—4399)
XXXIV	Securities and Exchange Commission (Parts 4400—4499)
XXXV	Office of Personnel Management (Parts 4500—4599)
XXXVI	Department of Homeland Security (Parts 4600—4699)
XXXVII	Federal Election Commission (Parts 4700—4799)
XL	Interstate Commerce Commission (Parts 5000—5099)
XLI	Commodity Futures Trading Commission (Parts 5100—5199)
XLII	Department of Labor (Parts 5200—5299)
XLIII	National Science Foundation (Parts 5300—5399)
XLV	Department of Health and Human Services (Parts 5500—5599)
XLVI	Postal Rate Commission (Parts 5600—5699)
XLVII	Federal Trade Commission (Parts 5700—5799)
XLVIII	Nuclear Regulatory Commission (Parts 5800—5899)
XLIX	Federal Labor Relations Authority (Parts 5900—5999)
L	Department of Transportation (Parts 6000—6099)
LII	Export-Import Bank of the United States (Parts 6200—6299)
LIII	Department of Education (Parts 6300—6399)
LIV	Environmental Protection Agency (Parts 6400—6499)
LV	National Endowment for the Arts (Parts 6500—6599)
LVI	National Endowment for the Humanities (Parts 6600—6699)
LVII	General Services Administration (Parts 6700—6799)
LVIII	Board of Governors of the Federal Reserve System (Parts 6800—6899)
LIX	National Aeronautics and Space Administration (Parts 6900—6999)
LX	United States Postal Service (Parts 7000—7099)
LXI	National Labor Relations Board (Parts 7100—7199)
LXII	Equal Employment Opportunity Commission (Parts 7200—7299)
LXIII	Inter-American Foundation (Parts 7300—7399)
LXIV	Merit Systems Protection Board (Parts 7400—7499)
LXV	Department of Housing and Urban Development (Parts 7500—7599)
LXVI	National Archives and Records Administration (Parts 7600—7699)
LXVII	Institute of Museum and Library Services (Parts 7700—7799)
LXVIII	Commission on Civil Rights (Parts 7800—7899)
LXIX	Tennessee Valley Authority (Parts 7900—7999)
LXX	Court Services and Offender Supervision Agency for the District of Columbia (Parts 8000—8099)
LXXI	Consumer Product Safety Commission (Parts 8100—8199)
LXXIII	Department of Agriculture (Parts 8300—8399)

Title 5—Administrative Personnel—Continued

Chap.

LXXIV Federal Mine Safety and Health Review Commission (Parts 8400—8499)

LXXVI Federal Retirement Thrift Investment Board (Parts 8600—8699)

LXXVII Office of Management and Budget (Parts 8700—8799)

LXXX Federal Housing Finance Agency (Parts 9000—9099)

LXXXIII Special Inspector General for Afghanistan Reconstruction (Parts 9300—9399)

LXXXIV Bureau of Consumer Financial Protection (Parts 9400—9499)

LXXXVI National Credit Union Administration (Parts 9600—9699)

XCVII Department of Homeland Security Human Resources Management System (Department of Homeland Security—Office of Personnel Management) (Parts 9700—9799)

XCVIII Council of the Inspectors General on Integrity and Efficiency (Parts 9800—9899)

XCIX Military Compensation and Retirement Modernization Commission (Parts 9900—9999)

C National Council on Disability (Parts 10000—10049)

CI National Mediation Board (Part 10101)

Title 6—Domestic Security

I Department of Homeland Security, Office of the Secretary (Parts 1—199)

X Privacy and Civil Liberties Oversight Board (Parts 1000—1099)

Title 7—Agriculture

SUBTITLE A—OFFICE OF THE SECRETARY OF AGRICULTURE (PARTS 0—26)

SUBTITLE B—REGULATIONS OF THE DEPARTMENT OF AGRICULTURE

I Agricultural Marketing Service (Standards, Inspections, Marketing Practices), Department of Agriculture (Parts 27—209)

II Food and Nutrition Service, Department of Agriculture (Parts 210—299)

III Animal and Plant Health Inspection Service, Department of Agriculture (Parts 300—399)

IV Federal Crop Insurance Corporation, Department of Agriculture (Parts 400—499)

V Agricultural Research Service, Department of Agriculture (Parts 500—599)

VI Natural Resources Conservation Service, Department of Agriculture (Parts 600—699)

VII Farm Service Agency, Department of Agriculture (Parts 700—799)

VIII Agricultural Marketing Service (Federal Grain Inspection Service, Fair Trade Practices Program), Department of Agriculture (Parts 800—899)

Title 7—Agriculture—Continued

Chap.	
IX	Agricultural Marketing Service (Marketing Agreements and Orders; Fruits, Vegetables, Nuts), Department of Agriculture (Parts 900—999)
X	Agricultural Marketing Service (Marketing Agreements and Orders; Milk), Department of Agriculture (Parts 1000—1199)
XI	Agricultural Marketing Service (Marketing Agreements and Orders; Miscellaneous Commodities), Department of Agriculture (Parts 1200—1299)
XIV	Commodity Credit Corporation, Department of Agriculture (Parts 1400—1499)
XV	Foreign Agricultural Service, Department of Agriculture (Parts 1500—1599)
XVI	[Reserved]
XVII	Rural Utilities Service, Department of Agriculture (Parts 1700—1799)
XVIII	Rural Housing Service, Rural Business-Cooperative Service, Rural Utilities Service, and Farm Service Agency, Department of Agriculture (Parts 1800—2099)
XX	[Reserved]
XXV	Office of Advocacy and Outreach, Department of Agriculture (Parts 2500—2599)
XXVI	Office of Inspector General, Department of Agriculture (Parts 2600—2699)
XXVII	Office of Information Resources Management, Department of Agriculture (Parts 2700—2799)
XXVIII	Office of Operations, Department of Agriculture (Parts 2800—2899)
XXIX	Office of Energy Policy and New Uses, Department of Agriculture (Parts 2900—2999)
XXX	Office of the Chief Financial Officer, Department of Agriculture (Parts 3000—3099)
XXXI	Office of Environmental Quality, Department of Agriculture (Parts 3100—3199)
XXXII	Office of Procurement and Property Management, Department of Agriculture (Parts 3200—3299)
XXXIII	Office of Transportation, Department of Agriculture (Parts 3300—3399)
XXXIV	National Institute of Food and Agriculture (Parts 3400—3499)
XXXV	Rural Housing Service, Department of Agriculture (Parts 3500—3599)
XXXVI	National Agricultural Statistics Service, Department of Agriculture (Parts 3600—3699)
XXXVII	Economic Research Service, Department of Agriculture (Parts 3700—3799)
XXXVIII	World Agricultural Outlook Board, Department of Agriculture (Parts 3800—3899)
XLI	[Reserved]
XLII	Rural Business-Cooperative Service and Rural Utilities Service, Department of Agriculture (Parts 4200—4299)

Title 8—Aliens and Nationality

Chap.

I Department of Homeland Security (Parts 1—499)

V Executive Office for Immigration Review, Department of Justice (Parts 1000—1399)

Title 9—Animals and Animal Products

I Animal and Plant Health Inspection Service, Department of Agriculture (Parts 1—199)

II Agricultural Marketing Service (Federal Grain Inspection Service, Fair Trade Practices Program), Department of Agriculture (Parts 200—299)

III Food Safety and Inspection Service, Department of Agriculture (Parts 300—599)

Title 10—Energy

I Nuclear Regulatory Commission (Parts 0—199)

II Department of Energy (Parts 200—699)

III Department of Energy (Parts 700—999)

X Department of Energy (General Provisions) (Parts 1000—1099)

XIII Nuclear Waste Technical Review Board (Parts 1300—1399)

XVII Defense Nuclear Facilities Safety Board (Parts 1700—1799)

XVIII Northeast Interstate Low-Level Radioactive Waste Commission (Parts 1800—1899)

Title 11—Federal Elections

I Federal Election Commission (Parts 1—9099)

II Election Assistance Commission (Parts 9400—9499)

Title 12—Banks and Banking

I Comptroller of the Currency, Department of the Treasury (Parts 1—199)

II Federal Reserve System (Parts 200—299)

III Federal Deposit Insurance Corporation (Parts 300—399)

IV Export-Import Bank of the United States (Parts 400—499)

V (Parts 500—599) [Reserved]

VI Farm Credit Administration (Parts 600—699)

VII National Credit Union Administration (Parts 700—799)

VIII Federal Financing Bank (Parts 800—899)

IX (Parts 900—999)[Reserved]

X Bureau of Consumer Financial Protection (Parts 1000—1099)

XI Federal Financial Institutions Examination Council (Parts 1100—1199)

XII Federal Housing Finance Agency (Parts 1200—1299)

XIII Financial Stability Oversight Council (Parts 1300—1399)

Title 12—Banks and Banking—Continued

Chap.

XIV Farm Credit System Insurance Corporation (Parts 1400—1499)

XV Department of the Treasury (Parts 1500—1599)

XVI Office of Financial Research (Parts 1600—1699)

XVII Office of Federal Housing Enterprise Oversight, Department of Housing and Urban Development (Parts 1700—1799)

XVIII Community Development Financial Institutions Fund, Department of the Treasury (Parts 1800—1899)

Title 13—Business Credit and Assistance

I Small Business Administration (Parts 1—199)

III Economic Development Administration, Department of Commerce (Parts 300—399)

IV Emergency Steel Guarantee Loan Board (Parts 400—499)

V Emergency Oil and Gas Guaranteed Loan Board (Parts 500—599)

Title 14—Aeronautics and Space

I Federal Aviation Administration, Department of Transportation (Parts 1—199)

II Office of the Secretary, Department of Transportation (Aviation Proceedings) (Parts 200—399)

III Commercial Space Transportation, Federal Aviation Administration, Department of Transportation (Parts 400—1199)

V National Aeronautics and Space Administration (Parts 1200—1299)

VI Air Transportation System Stabilization (Parts 1300—1399)

Title 15—Commerce and Foreign Trade

SUBTITLE A—OFFICE OF THE SECRETARY OF COMMERCE (PARTS 0—29)

SUBTITLE B—REGULATIONS RELATING TO COMMERCE AND FOREIGN TRADE

I Bureau of the Census, Department of Commerce (Parts 30—199)

II National Institute of Standards and Technology, Department of Commerce (Parts 200—299)

III International Trade Administration, Department of Commerce (Parts 300—399)

IV Foreign-Trade Zones Board, Department of Commerce (Parts 400—499)

VII Bureau of Industry and Security, Department of Commerce (Parts 700—799)

VIII Bureau of Economic Analysis, Department of Commerce (Parts 800—899)

IX National Oceanic and Atmospheric Administration, Department of Commerce (Parts 900—999)

XI National Technical Information Service, Department of Commerce (Parts 1100—1199)

Title 15—Commerce and Foreign Trade—Continued

Chap.

XIII East-West Foreign Trade Board (Parts 1300—1399)

XIV Minority Business Development Agency (Parts 1400—1499)

SUBTITLE C—REGULATIONS RELATING TO FOREIGN TRADE AGREEMENTS

XX Office of the United States Trade Representative (Parts 2000—2099)

SUBTITLE D—REGULATIONS RELATING TO TELECOMMUNICATIONS AND INFORMATION

XXIII National Telecommunications and Information Administration, Department of Commerce (Parts 2300—2399) [Reserved]

Title 16—Commercial Practices

I Federal Trade Commission (Parts 0—999)

II Consumer Product Safety Commission (Parts 1000—1799)

Title 17—Commodity and Securities Exchanges

I Commodity Futures Trading Commission (Parts 1—199)

II Securities and Exchange Commission (Parts 200—399)

IV Department of the Treasury (Parts 400—499)

Title 18—Conservation of Power and Water Resources

I Federal Energy Regulatory Commission, Department of Energy (Parts 1—399)

III Delaware River Basin Commission (Parts 400—499)

VI Water Resources Council (Parts 700—799)

VIII Susquehanna River Basin Commission (Parts 800—899)

XIII Tennessee Valley Authority (Parts 1300—1399)

Title 19—Customs Duties

I U.S. Customs and Border Protection, Department of Homeland Security; Department of the Treasury (Parts 0—199)

II United States International Trade Commission (Parts 200—299)

III International Trade Administration, Department of Commerce (Parts 300—399)

IV U.S. Immigration and Customs Enforcement, Department of Homeland Security (Parts 400—599) [Reserved]

Title 20—Employees' Benefits

I Office of Workers' Compensation Programs, Department of Labor (Parts 1—199)

II Railroad Retirement Board (Parts 200—399)

III Social Security Administration (Parts 400—499)

Title 20—Employees' Benefits—Continued

Chap.

IV Employees' Compensation Appeals Board, Department of Labor (Parts 500—599)

V Employment and Training Administration, Department of Labor (Parts 600—699)

VI Office of Workers' Compensation Programs, Department of Labor (Parts 700—799)

VII Benefits Review Board, Department of Labor (Parts 800—899)

VIII Joint Board for the Enrollment of Actuaries (Parts 900—999)

IX Office of the Assistant Secretary for Veterans' Employment and Training Service, Department of Labor (Parts 1000—1099)

Title 21—Food and Drugs

I Food and Drug Administration, Department of Health and Human Services (Parts 1—1299)

II Drug Enforcement Administration, Department of Justice (Parts 1300—1399)

III Office of National Drug Control Policy (Parts 1400—1499)

Title 22—Foreign Relations

I Department of State (Parts 1—199)

II Agency for International Development (Parts 200—299)

III Peace Corps (Parts 300—399)

IV International Joint Commission, United States and Canada (Parts 400—499)

V Broadcasting Board of Governors (Parts 500—599)

VII Overseas Private Investment Corporation (Parts 700—799)

IX Foreign Service Grievance Board (Parts 900—999)

X Inter-American Foundation (Parts 1000—1099)

XI International Boundary and Water Commission, United States and Mexico, United States Section (Parts 1100—1199)

XII United States International Development Cooperation Agency (Parts 1200—1299)

XIII Millennium Challenge Corporation (Parts 1300—1399)

XIV Foreign Service Labor Relations Board; Federal Labor Relations Authority; General Counsel of the Federal Labor Relations Authority; and the Foreign Service Impasse Disputes Panel (Parts 1400—1499)

XV African Development Foundation (Parts 1500—1599)

XVI Japan-United States Friendship Commission (Parts 1600—1699)

XVII United States Institute of Peace (Parts 1700—1799)

Title 23—Highways

I Federal Highway Administration, Department of Transportation (Parts 1—999)

Title 23—Highways—Continued

Chap.

II National Highway Traffic Safety Administration and Federal Highway Administration, Department of Transportation (Parts 1200—1299)

III National Highway Traffic Safety Administration, Department of Transportation (Parts 1300—1399)

Title 24—Housing and Urban Development

SUBTITLE A—OFFICE OF THE SECRETARY, DEPARTMENT OF HOUSING AND URBAN DEVELOPMENT (PARTS 0—99)

SUBTITLE B—REGULATIONS RELATING TO HOUSING AND URBAN DEVELOPMENT

I Office of Assistant Secretary for Equal Opportunity, Department of Housing and Urban Development (Parts 100—199)

II Office of Assistant Secretary for Housing-Federal Housing Commissioner, Department of Housing and Urban Development (Parts 200—299)

III Government National Mortgage Association, Department of Housing and Urban Development (Parts 300—399)

IV Office of Housing and Office of Multifamily Housing Assistance Restructuring, Department of Housing and Urban Development (Parts 400—499)

V Office of Assistant Secretary for Community Planning and Development, Department of Housing and Urban Development (Parts 500—599)

VI Office of Assistant Secretary for Community Planning and Development, Department of Housing and Urban Development (Parts 600—699) [Reserved]

VII Office of the Secretary, Department of Housing and Urban Development (Housing Assistance Programs and Public and Indian Housing Programs) (Parts 700—799)

VIII Office of the Assistant Secretary for Housing—Federal Housing Commissioner, Department of Housing and Urban Development (Section 8 Housing Assistance Programs, Section 202 Direct Loan Program, Section 202 Supportive Housing for the Elderly Program and Section 811 Supportive Housing for Persons With Disabilities Program) (Parts 800—899)

IX Office of Assistant Secretary for Public and Indian Housing, Department of Housing and Urban Development (Parts 900—1699)

XII Office of Inspector General, Department of Housing and Urban Development (Parts 2000—2099)

XV Emergency Mortgage Insurance and Loan Programs, Department of Housing and Urban Development (Parts 2700—2799) [Reserved]

XX Office of Assistant Secretary for Housing—Federal Housing Commissioner, Department of Housing and Urban Development (Parts 3200—3899)

XXIV Board of Directors of the HOPE for Homeowners Program (Parts 4000—4099) [Reserved]

XXV Neighborhood Reinvestment Corporation (Parts 4100—4199)

Title 25—Indians

Chap.

I Bureau of Indian Affairs, Department of the Interior (Parts 1—299)

II Indian Arts and Crafts Board, Department of the Interior (Parts 300—399)

III National Indian Gaming Commission, Department of the Interior (Parts 500—599)

IV Office of Navajo and Hopi Indian Relocation (Parts 700—899)

V Bureau of Indian Affairs, Department of the Interior, and Indian Health Service, Department of Health and Human Services (Part 900—999)

VI Office of the Assistant Secretary, Indian Affairs, Department of the Interior (Parts 1000—1199)

VII Office of the Special Trustee for American Indians, Department of the Interior (Parts 1200—1299)

Title 26—Internal Revenue

I Internal Revenue Service, Department of the Treasury (Parts 1—End)

Title 27—Alcohol, Tobacco Products and Firearms

I Alcohol and Tobacco Tax and Trade Bureau, Department of the Treasury (Parts 1—399)

II Bureau of Alcohol, Tobacco, Firearms, and Explosives, Department of Justice (Parts 400—799)

Title 28—Judicial Administration

I Department of Justice (Parts 0—299)

III Federal Prison Industries, Inc., Department of Justice (Parts 300—399)

V Bureau of Prisons, Department of Justice (Parts 500—599)

VI Offices of Independent Counsel, Department of Justice (Parts 600—699)

VII Office of Independent Counsel (Parts 700—799)

VIII Court Services and Offender Supervision Agency for the District of Columbia (Parts 800—899)

IX National Crime Prevention and Privacy Compact Council (Parts 900—999)

XI Department of Justice and Department of State (Parts 1100—1199)

Title 29—Labor

SUBTITLE A—OFFICE OF THE SECRETARY OF LABOR (PARTS 0—99)

SUBTITLE B—REGULATIONS RELATING TO LABOR

I National Labor Relations Board (Parts 100—199)

Title 29—Labor—Continued

Chap.

II Office of Labor-Management Standards, Department of Labor (Parts 200—299)

III National Railroad Adjustment Board (Parts 300—399)

IV Office of Labor-Management Standards, Department of Labor (Parts 400—499)

V Wage and Hour Division, Department of Labor (Parts 500—899)

IX Construction Industry Collective Bargaining Commission (Parts 900—999)

X National Mediation Board (Parts 1200—1299)

XII Federal Mediation and Conciliation Service (Parts 1400—1499)

XIV Equal Employment Opportunity Commission (Parts 1600—1699)

XVII Occupational Safety and Health Administration, Department of Labor (Parts 1900—1999)

XX Occupational Safety and Health Review Commission (Parts 2200—2499)

XXV Employee Benefits Security Administration, Department of Labor (Parts 2500—2599)

XXVII Federal Mine Safety and Health Review Commission (Parts 2700—2799)

XL Pension Benefit Guaranty Corporation (Parts 4000—4999)

Title 30—Mineral Resources

I Mine Safety and Health Administration, Department of Labor (Parts 1—199)

II Bureau of Safety and Environmental Enforcement, Department of the Interior (Parts 200—299)

IV Geological Survey, Department of the Interior (Parts 400—499)

V Bureau of Ocean Energy Management, Department of the Interior (Parts 500—599)

VII Office of Surface Mining Reclamation and Enforcement, Department of the Interior (Parts 700—999)

XII Office of Natural Resources Revenue, Department of the Interior (Parts 1200—1299)

Title 31—Money and Finance: Treasury

SUBTITLE A—OFFICE OF THE SECRETARY OF THE TREASURY (PARTS 0—50)

SUBTITLE B—REGULATIONS RELATING TO MONEY AND FINANCE

I Monetary Offices, Department of the Treasury (Parts 51—199)

II Fiscal Service, Department of the Treasury (Parts 200—399)

IV Secret Service, Department of the Treasury (Parts 400—499)

V Office of Foreign Assets Control, Department of the Treasury (Parts 500—599)

VI Bureau of Engraving and Printing, Department of the Treasury (Parts 600—699)

VII Federal Law Enforcement Training Center, Department of the Treasury (Parts 700—799)

Title 31—Money and Finance: Treasury—Continued

Chap.

VIII Office of Investment Security, Department of the Treasury (Parts 800—899)

IX Federal Claims Collection Standards (Department of the Treasury—Department of Justice) (Parts 900—999)

X Financial Crimes Enforcement Network, Department of the Treasury (Parts 1000—1099)

Title 32—National Defense

SUBTITLE A—DEPARTMENT OF DEFENSE

I Office of the Secretary of Defense (Parts 1—399)

V Department of the Army (Parts 400—699)

VI Department of the Navy (Parts 700—799)

VII Department of the Air Force (Parts 800—1099)

SUBTITLE B—OTHER REGULATIONS RELATING TO NATIONAL DEFENSE

XII Department of Defense, Defense Logistics Agency (Parts 1200—1299)

XVI Selective Service System (Parts 1600—1699)

XVII Office of the Director of National Intelligence (Parts 1700—1799)

XVIII National Counterintelligence Center (Parts 1800—1899)

XIX Central Intelligence Agency (Parts 1900—1999)

XX Information Security Oversight Office, National Archives and Records Administration (Parts 2000—2099)

XXI National Security Council (Parts 2100—2199)

XXIV Office of Science and Technology Policy (Parts 2400—2499)

XXVII Office for Micronesian Status Negotiations (Parts 2700—2799)

XXVIII Office of the Vice President of the United States (Parts 2800—2899)

Title 33—Navigation and Navigable Waters

I Coast Guard, Department of Homeland Security (Parts 1—199)

II Corps of Engineers, Department of the Army, Department of Defense (Parts 200—399)

IV Saint Lawrence Seaway Development Corporation, Department of Transportation (Parts 400—499)

Title 34—Education

SUBTITLE A—OFFICE OF THE SECRETARY, DEPARTMENT OF EDUCATION (PARTS 1—99)

SUBTITLE B—REGULATIONS OF THE OFFICES OF THE DEPARTMENT OF EDUCATION

I Office for Civil Rights, Department of Education (Parts 100—199)

II Office of Elementary and Secondary Education, Department of Education (Parts 200—299)

Title 34—Education—Continued

Chap.

III Office of Special Education and Rehabilitative Services, Department of Education (Parts 300—399)

IV Office of Career, Technical, and Adult Education, Department of Education (Parts 400—499)

V Office of Bilingual Education and Minority Languages Affairs, Department of Education (Parts 500—599) [Reserved]

VI Office of Postsecondary Education, Department of Education (Parts 600—699)

VII Office of Educational Research and Improvement, Department of Education (Parts 700—799) [Reserved]

SUBTITLE C—REGULATIONS RELATING TO EDUCATION

XI (Parts 1100—1199) [Reserved]

XII National Council on Disability (Parts 1200—1299)

Title 35 [Reserved]

Title 36—Parks, Forests, and Public Property

I National Park Service, Department of the Interior (Parts 1—199)

II Forest Service, Department of Agriculture (Parts 200—299)

III Corps of Engineers, Department of the Army (Parts 300—399)

IV American Battle Monuments Commission (Parts 400—499)

V Smithsonian Institution (Parts 500—599)

VI [Reserved]

VII Library of Congress (Parts 700—799)

VIII Advisory Council on Historic Preservation (Parts 800—899)

IX Pennsylvania Avenue Development Corporation (Parts 900—999)

X Presidio Trust (Parts 1000—1099)

XI Architectural and Transportation Barriers Compliance Board (Parts 1100—1199)

XII National Archives and Records Administration (Parts 1200—1299)

XV Oklahoma City National Memorial Trust (Parts 1500—1599)

XVI Morris K. Udall Scholarship and Excellence in National Environmental Policy Foundation (Parts 1600—1699)

Title 37—Patents, Trademarks, and Copyrights

I United States Patent and Trademark Office, Department of Commerce (Parts 1—199)

II U.S. Copyright Office, Library of Congress (Parts 200—299)

III Copyright Royalty Board, Library of Congress (Parts 300—399)

IV National Institute of Standards and Technology, Department of Commerce (Parts 400—599)

Title 38—Pensions, Bonuses, and Veterans' Relief

Chap.

I Department of Veterans Affairs (Parts 0—199)

II Armed Forces Retirement Home (Parts 200—299)

Title 39—Postal Service

I United States Postal Service (Parts 1—999)

III Postal Regulatory Commission (Parts 3000—3099)

Title 40—Protection of Environment

I Environmental Protection Agency (Parts 1—1099)

IV Environmental Protection Agency and Department of Justice (Parts 1400—1499)

V Council on Environmental Quality (Parts 1500—1599)

VI Chemical Safety and Hazard Investigation Board (Parts 1600—1699)

VII Environmental Protection Agency and Department of Defense; Uniform National Discharge Standards for Vessels of the Armed Forces (Parts 1700—1799)

VIII Gulf Coast Ecosystem Restoration Council (Parts 1800—1899)

Title 41—Public Contracts and Property Management

SUBTITLE A—FEDERAL PROCUREMENT REGULATIONS SYSTEM [NOTE]

SUBTITLE B—OTHER PROVISIONS RELATING TO PUBLIC CONTRACTS

50 Public Contracts, Department of Labor (Parts 50–1—50–999)

51 Committee for Purchase From People Who Are Blind or Severely Disabled (Parts 51–1—51–99)

60 Office of Federal Contract Compliance Programs, Equal Employment Opportunity, Department of Labor (Parts 60–1—60–999)

61 Office of the Assistant Secretary for Veterans' Employment and Training Service, Department of Labor (Parts 61–1—61–999)

62—100 [Reserved]

SUBTITLE C—FEDERAL PROPERTY MANAGEMENT REGULATIONS SYSTEM

101 Federal Property Management Regulations (Parts 101–1—101–99)

102 Federal Management Regulation (Parts 102–1—102–299)

103—104 [Reserved]

105 General Services Administration (Parts 105–1—105–999)

109 Department of Energy Property Management Regulations (Parts 109–1—109–99)

114 Department of the Interior (Parts 114–1—114–99)

115 Environmental Protection Agency (Parts 115–1—115–99)

128 Department of Justice (Parts 128–1—128–99)

129—200 [Reserved]

SUBTITLE D—OTHER PROVISIONS RELATING TO PROPERTY MANAGEMENT [RESERVED]

Chap.

SUBTITLE E—FEDERAL INFORMATION RESOURCES MANAGEMENT REGULATIONS SYSTEM [RESERVED]

SUBTITLE F—FEDERAL TRAVEL REGULATION SYSTEM

300 General (Parts 300–1—300–99)

301 Temporary Duty (TDY) Travel Allowances (Parts 301–1—301–99)

302 Relocation Allowances (Parts 302–1—302–99)

303 Payment of Expenses Connected with the Death of Certain Employees (Part 303–1—303–99)

304 Payment of Travel Expenses from a Non-Federal Source (Parts 304–1—304–99)

Title 42—Public Health

I Public Health Service, Department of Health and Human Services (Parts 1—199)

II—III [Reserved]

IV Centers for Medicare & Medicaid Services, Department of Health and Human Services (Parts 400—699)

V Office of Inspector General-Health Care, Department of Health and Human Services (Parts 1000—1099)

Title 43—Public Lands: Interior

SUBTITLE A—OFFICE OF THE SECRETARY OF THE INTERIOR (PARTS 1—199)

SUBTITLE B—REGULATIONS RELATING TO PUBLIC LANDS

I Bureau of Reclamation, Department of the Interior (Parts 400—999)

II Bureau of Land Management, Department of the Interior (Parts 1000—9999)

III Utah Reclamation Mitigation and Conservation Commission (Parts 10000—10099)

Title 44—Emergency Management and Assistance

I Federal Emergency Management Agency, Department of Homeland Security (Parts 0—399)

IV Department of Commerce and Department of Transportation (Parts 400—499)

Title 45—Public Welfare

SUBTITLE A—DEPARTMENT OF HEALTH AND HUMAN SERVICES (PARTS 1—199)

SUBTITLE B—REGULATIONS RELATING TO PUBLIC WELFARE

II Office of Family Assistance (Assistance Programs), Administration for Children and Families, Department of Health and Human Services (Parts 200—299)

Title 45—Public Welfare—Continued

Chap.

III Office of Child Support Enforcement (Child Support Enforcement Program), Administration for Children and Families, Department of Health and Human Services (Parts 300—399)

IV Office of Refugee Resettlement, Administration for Children and Families, Department of Health and Human Services (Parts 400—499)

V Foreign Claims Settlement Commission of the United States, Department of Justice (Parts 500—599)

VI National Science Foundation (Parts 600—699)

VII Commission on Civil Rights (Parts 700—799)

VIII Office of Personnel Management (Parts 800—899)

IX Denali Commission (Parts 900—999)

X Office of Community Services, Administration for Children and Families, Department of Health and Human Services (Parts 1000—1099)

XI National Foundation on the Arts and the Humanities (Parts 1100—1199)

XII Corporation for National and Community Service (Parts 1200—1299)

XIII Administration for Children and Families, Department of Health and Human Services (Parts 1300—1399)

XVI Legal Services Corporation (Parts 1600—1699)

XVII National Commission on Libraries and Information Science (Parts 1700—1799)

XVIII Harry S. Truman Scholarship Foundation (Parts 1800—1899)

XXI Commission of Fine Arts (Parts 2100—2199)

XXIII Arctic Research Commission (Parts 2300—2399)

XXIV James Madison Memorial Fellowship Foundation (Parts 2400—2499)

XXV Corporation for National and Community Service (Parts 2500—2599)

Title 46—Shipping

I Coast Guard, Department of Homeland Security (Parts 1—199)

II Maritime Administration, Department of Transportation (Parts 200—399)

III Coast Guard (Great Lakes Pilotage), Department of Homeland Security (Parts 400—499)

IV Federal Maritime Commission (Parts 500—599)

Title 47—Telecommunication

I Federal Communications Commission (Parts 0—199)

II Office of Science and Technology Policy and National Security Council (Parts 200—299)

III National Telecommunications and Information Administration, Department of Commerce (Parts 300—399)

Title 47—Telecommunication—Continued

Chap.

IV National Telecommunications and Information Administration, Department of Commerce, and National Highway Traffic Safety Administration, Department of Transportation (Parts 400—499)

V The First Responder Network Authority (Parts 500—599)

Title 48—Federal Acquisition Regulations System

1 Federal Acquisition Regulation (Parts 1—99)

2 Defense Acquisition Regulations System, Department of Defense (Parts 200—299)

3 Department of Health and Human Services (Parts 300—399)

4 Department of Agriculture (Parts 400—499)

5 General Services Administration (Parts 500—599)

6 Department of State (Parts 600—699)

7 Agency for International Development (Parts 700—799)

8 Department of Veterans Affairs (Parts 800—899)

9 Department of Energy (Parts 900—999)

10 Department of the Treasury (Parts 1000—1099)

12 Department of Transportation (Parts 1200—1299)

13 Department of Commerce (Parts 1300—1399)

14 Department of the Interior (Parts 1400—1499)

15 Environmental Protection Agency (Parts 1500—1599)

16 Office of Personnel Management, Federal Employees Health Benefits Acquisition Regulation (Parts 1600—1699)

17 Office of Personnel Management (Parts 1700—1799)

18 National Aeronautics and Space Administration (Parts 1800—1899)

19 Broadcasting Board of Governors (Parts 1900—1999)

20 Nuclear Regulatory Commission (Parts 2000—2099)

21 Office of Personnel Management, Federal Employees Group Life Insurance Federal Acquisition Regulation (Parts 2100—2199)

23 Social Security Administration (Parts 2300—2399)

24 Department of Housing and Urban Development (Parts 2400—2499)

25 National Science Foundation (Parts 2500—2599)

28 Department of Justice (Parts 2800—2899)

29 Department of Labor (Parts 2900—2999)

30 Department of Homeland Security, Homeland Security Acquisition Regulation (HSAR) (Parts 3000—3099)

34 Department of Education Acquisition Regulation (Parts 3400—3499)

51 Department of the Army Acquisition Regulations (Parts 5100—5199) [Reserved]

52 Department of the Navy Acquisition Regulations (Parts 5200—5299)

53 Department of the Air Force Federal Acquisition Regulation Supplement (Parts 5300—5399) [Reserved]

Chap.

54 Defense Logistics Agency, Department of Defense (Parts 5400—5499)

57 African Development Foundation (Parts 5700—5799)

61 Civilian Board of Contract Appeals, General Services Administration (Parts 6100—6199)

99 Cost Accounting Standards Board, Office of Federal Procurement Policy, Office of Management and Budget (Parts 9900—9999)

Title 49—Transportation

SUBTITLE A—OFFICE OF THE SECRETARY OF TRANSPORTATION (PARTS 1—99)

SUBTITLE B—OTHER REGULATIONS RELATING TO TRANSPORTATION

I Pipeline and Hazardous Materials Safety Administration, Department of Transportation (Parts 100—199)

II Federal Railroad Administration, Department of Transportation (Parts 200—299)

III Federal Motor Carrier Safety Administration, Department of Transportation (Parts 300—399)

IV Coast Guard, Department of Homeland Security (Parts 400—499)

V National Highway Traffic Safety Administration, Department of Transportation (Parts 500—599)

VI Federal Transit Administration, Department of Transportation (Parts 600—699)

VII National Railroad Passenger Corporation (AMTRAK) (Parts 700—799)

VIII National Transportation Safety Board (Parts 800—999)

X Surface Transportation Board (Parts 1000—1399)

XI Research and Innovative Technology Administration, Department of Transportation (Parts 1400—1499) [Reserved]

XII Transportation Security Administration, Department of Homeland Security (Parts 1500—1699)

Title 50—Wildlife and Fisheries

I United States Fish and Wildlife Service, Department of the Interior (Parts 1—199)

II National Marine Fisheries Service, National Oceanic and Atmospheric Administration, Department of Commerce (Parts 200—299)

III International Fishing and Related Activities (Parts 300—399)

IV Joint Regulations (United States Fish and Wildlife Service, Department of the Interior and National Marine Fisheries Service, National Oceanic and Atmospheric Administration, Department of Commerce); Endangered Species Committee Regulations (Parts 400—499)

V Marine Mammal Commission (Parts 500—599)

Title 50—Wildlife and Fisheries—Continued

Chap.

VI Fishery Conservation and Management, National Oceanic and Atmospheric Administration, Department of Commerce (Parts 600—699)

Alphabetical List of Agencies Appearing in the CFR

(Revised as of July 1, 2020)

Agency	CFR Title, Subtitle or Chapter
Administrative Conference of the United States	1, III
Advisory Council on Historic Preservation	36, VIII
Advocacy and Outreach, Office of	7, XXV
Afghanistan Reconstruction, Special Inspector General for	5, LXXXIII
African Development Foundation	22, XV
Federal Acquisition Regulation	48, 57
Agency for International Development	2, VII; 22, II
Federal Acquisition Regulation	48, 7
Agricultural Marketing Service	7, I, VIII, IX, X, XI; 9, II
Agricultural Research Service	7, V
Agriculture, Department of	2, IV; 5, LXXIII
Advocacy and Outreach, Office of	7, XXV
Agricultural Marketing Service	7, I, VIII, IX, X, XI; 9, II
Agricultural Research Service	7, V
Animal and Plant Health Inspection Service	7, III; 9, I
Chief Financial Officer, Office of	7, XXX
Commodity Credit Corporation	7, XIV
Economic Research Service	7, XXXVII
Energy Policy and New Uses, Office of	2, IX; 7, XXIX
Environmental Quality, Office of	7, XXXI
Farm Service Agency	7, VII, XVIII
Federal Acquisition Regulation	48, 4
Federal Crop Insurance Corporation	7, IV
Food and Nutrition Service	7, II
Food Safety and Inspection Service	9, III
Foreign Agricultural Service	7, XV
Forest Service	36, II
Information Resources Management, Office of	7, XXVII
Inspector General, Office of	7, XXVI
National Agricultural Library	7, XLI
National Agricultural Statistics Service	7, XXXVI
National Institute of Food and Agriculture	7, XXXIV
Natural Resources Conservation Service	7, VI
Operations, Office of	7, XXVIII
Procurement and Property Management, Office of	7, XXXII
Rural Business-Cooperative Service	7, XVIII, XLII
Rural Development Administration	7, XLII
Rural Housing Service	7, XVIII, XXXV
Rural Utilities Service	7, XVII, XVIII, XLII
Secretary of Agriculture, Office of	7, Subtitle A
Transportation, Office of	7, XXXIII
World Agricultural Outlook Board	7, XXXVIII
Air Force, Department of	32, VII
Federal Acquisition Regulation Supplement	48, 53
Air Transportation Stabilization Board	14, VI
Alcohol and Tobacco Tax and Trade Bureau	27, I
Alcohol, Tobacco, Firearms, and Explosives, Bureau of	27, II
AMTRAK	49, VII
American Battle Monuments Commission	36, IV
American Indians, Office of the Special Trustee	25, VII
Animal and Plant Health Inspection Service	7, III; 9, I
Appalachian Regional Commission	5, IX
Architectural and Transportation Barriers Compliance Board	36, XI

Agency	CFR Title, Subtitle or Chapter
Arctic Research Commission	45, XXIII
Armed Forces Retirement Home	5, XI; 38, II
Army, Department of	32, V
Engineers, Corps of	33, II; 36, III
Federal Acquisition Regulation	48, 51
Bilingual Education and Minority Languages Affairs, Office of	34, V
Blind or Severely Disabled, Committee for Purchase from People Who Are	41, 51
Broadcasting Board of Governors	22, V
Federal Acquisition Regulation	48, 19
Career, Technical, and Adult Education, Office of	34, IV
Census Bureau	15, I
Centers for Medicare & Medicaid Services	42, IV
Central Intelligence Agency	32, XIX
Chemical Safety and Hazard Investigation Board	40, VI
Chief Financial Officer, Office of	7, XXX
Child Support Enforcement, Office of	45, III
Children and Families, Administration for	45, II, III, IV, X, XIII
Civil Rights, Commission on	5, LXVIII; 45, VII
Civil Rights, Office for	34, I
Coast Guard	33, I; 46, I; 49, IV
Coast Guard (Great Lakes Pilotage)	46, III
Commerce, Department of	2, XIII; 44, IV; 50, VI
Census Bureau	15, I
Economic Analysis, Bureau of	15, VIII
Economic Development Administration	13, III
Emergency Management and Assistance	44, IV
Federal Acquisition Regulation	48, 13
Foreign-Trade Zones Board	15, IV
Industry and Security, Bureau of	15, VII
International Trade Administration	15, III; 19, III
National Institute of Standards and Technology	15, II; 37, IV
National Marine Fisheries Service	50, II, IV
National Oceanic and Atmospheric Administration	15, IX; 50, II, III, IV, VI
National Technical Information Service	15, XI
National Telecommunications and Information Administration	15, XXIII; 47, III, IV
National Weather Service	15, IX
Patent and Trademark Office, United States	37, I
Secretary of Commerce, Office of	15, Subtitle A
Commercial Space Transportation	14, III
Commodity Credit Corporation	7, XIV
Commodity Futures Trading Commission	5, XLI; 17, I
Community Planning and Development, Office of Assistant Secretary for	24, V, VI
Community Services, Office of	45, X
Comptroller of the Currency	12, I
Construction Industry Collective Bargaining Commission	29, IX
Consumer Financial Protection Bureau	5, LXXXIV; 12, X
Consumer Product Safety Commission	5, LXXI; 16, II
Copyright Royalty Board	37, III
Corporation for National and Community Service	2, XXII; 45, XII, XXV
Cost Accounting Standards Board	48, 99
Council of the Inspectors General on Integrity and Efficiency	5, XCVIII
Council on Environmental Quality	40, V
Court Services and Offender Supervision Agency for the District of Columbia	5, LXX; 28, VIII
Customs and Border Protection	19, I
Defense, Department of	2, XI; 5, XXVI; 32, Subtitle A; 40, VII
Advanced Research Projects Agency	32, I
Air Force Department	32, VII
Army Department	32, V; 33, II; 36, III; 48, 51
Defense Acquisition Regulations System	48, 2
Defense Intelligence Agency	32, I
Defense Logistics Agency	32, I, XII; 48, 54

Agency	CFR Title, Subtitle or Chapter
Engineers, Corps of	33, II; 36, III
National Imagery and Mapping Agency	32, I
Navy, Department of	32, VI; 48, 52
Secretary of Defense, Office of	2, XI; 32, I
Defense Contract Audit Agency	32, I
Defense Intelligence Agency	32, I
Defense Logistics Agency	32, XII; 48, 54
Defense Nuclear Facilities Safety Board	10, XVII
Delaware River Basin Commission	18, III
Denali Commission	45, IX
Disability, National Council on	5, C; 34, XII
District of Columbia, Court Services and Offender Supervision Agency for the	5, LXX; 28, VIII
Drug Enforcement Administration	21, II
East-West Foreign Trade Board	15, XIII
Economic Analysis, Bureau of	15, VIII
Economic Development Administration	13, III
Economic Research Service	7, XXXVII
Education, Department of	2, XXXIV; 5, LIII
Bilingual Education and Minority Languages Affairs, Office of	34, V
Career, Technical, and Adult Education, Office of	34, IV
Civil Rights, Office for	34, I
Educational Research and Improvement, Office of	34, VII
Elementary and Secondary Education, Office of	34, II
Federal Acquisition Regulation	48, 34
Postsecondary Education, Office of	34, VI
Secretary of Education, Office of	34, Subtitle A
Special Education and Rehabilitative Services, Office of	34, III
Educational Research and Improvement, Office of	34, VII
Election Assistance Commission	2, LVIII; 11, II
Elementary and Secondary Education, Office of	34, II
Emergency Oil and Gas Guaranteed Loan Board	13, V
Emergency Steel Guarantee Loan Board	13, IV
Employee Benefits Security Administration	29, XXV
Employees' Compensation Appeals Board	20, IV
Employees Loyalty Board	5, V
Employment and Training Administration	20, V
Employment Policy, National Commission for	1, IV
Employment Standards Administration	20, VI
Endangered Species Committee	50, IV
Energy, Department of	2, IX; 5, XXIII; 10, II, III, X
Federal Acquisition Regulation	48, 9
Federal Energy Regulatory Commission	5, XXIV; 18, I
Property Management Regulations	41, 109
Energy, Office of	7, XXIX
Engineers, Corps of	33, II; 36, III
Engraving and Printing, Bureau of	31, VI
Environmental Protection Agency	2, XV; 5, LIV; 40, I, IV, VII
Federal Acquisition Regulation	48, 15
Property Management Regulations	41, 115
Environmental Quality, Office of	7, XXXI
Equal Employment Opportunity Commission	5, LXII; 29, XIV
Equal Opportunity, Office of Assistant Secretary for	24, I
Executive Office of the President	3, I
Environmental Quality, Council on	40, V
Management and Budget, Office of	2, Subtitle A; 5, III, LXXVII; 14, VI; 48, 99
National Drug Control Policy, Office of	2, XXXVI; 21, III
National Security Council	32, XXI; 47, II
Presidential Documents	3
Science and Technology Policy, Office of	32, XXIV; 47, II
Trade Representative, Office of the United States	15, XX
Export-Import Bank of the United States	2, XXXV; 5, LII; 12, IV
Family Assistance, Office of	45, II

Agency	CFR Title, Subtitle or Chapter
Farm Credit Administration	5, XXXI; 12, VI
Farm Credit System Insurance Corporation	5, XXX; 12, XIV
Farm Service Agency	7, VII, XVIII
Federal Acquisition Regulation	48, 1
Federal Aviation Administration	14, I
Commercial Space Transportation	14, III
Federal Claims Collection Standards	31, IX
Federal Communications Commission	5, XXIX; 47, I
Federal Contract Compliance Programs, Office of	41, 60
Federal Crop Insurance Corporation	7, IV
Federal Deposit Insurance Corporation	5, XXII; 12, III
Federal Election Commission	5, XXXVII; 11, I
Federal Emergency Management Agency	44, I
Federal Employees Group Life Insurance Federal Acquisition Regulation	48, 21
Federal Employees Health Benefits Acquisition Regulation	48, 16
Federal Energy Regulatory Commission	5, XXIV; 18, I
Federal Financial Institutions Examination Council	12, XI
Federal Financing Bank	12, VIII
Federal Highway Administration	23, I, II
Federal Home Loan Mortgage Corporation	1, IV
Federal Housing Enterprise Oversight Office	12, XVII
Federal Housing Finance Agency	5, LXXX; 12, XII
Federal Labor Relations Authority	5, XIV, XLIX; 22, XIV
Federal Law Enforcement Training Center	31, VII
Federal Management Regulation	41, 102
Federal Maritime Commission	46, IV
Federal Mediation and Conciliation Service	29, XII
Federal Mine Safety and Health Review Commission	5, LXXIV; 29, XXVII
Federal Motor Carrier Safety Administration	49, III
Federal Prison Industries, Inc.	28, III
Federal Procurement Policy Office	48, 99
Federal Property Management Regulations	41, 101
Federal Railroad Administration	49, II
Federal Register, Administrative Committee of	1, I
Federal Register, Office of	1, II
Federal Reserve System	12, II
Board of Governors	5, LVIII
Federal Retirement Thrift Investment Board	5, VI, LXXVI
Federal Service Impasses Panel	5, XIV
Federal Trade Commission	5, XLVII; 16, I
Federal Transit Administration	49, VI
Federal Travel Regulation System	41, Subtitle F
Financial Crimes Enforcement Network	31, X
Financial Research Office	12, XVI
Financial Stability Oversight Council	12, XIII
Fine Arts, Commission of	45, XXI
Fiscal Service	31, II
Fish and Wildlife Service, United States	50, I, IV
Food and Drug Administration	21, I
Food and Nutrition Service	7, II
Food Safety and Inspection Service	9, III
Foreign Agricultural Service	7, XV
Foreign Assets Control, Office of	31, V
Foreign Claims Settlement Commission of the United States	45, V
Foreign Service Grievance Board	22, IX
Foreign Service Impasse Disputes Panel	22, XIV
Foreign Service Labor Relations Board	22, XIV
Foreign-Trade Zones Board	15, IV
Forest Service	36, II
General Services Administration	5, LVII; 41, 105
Contract Appeals, Board of	48, 61
Federal Acquisition Regulation	48, 5
Federal Management Regulation	41, 102
Federal Property Management Regulations	41, 101
Federal Travel Regulation System	41, Subtitle F
General	41, 300

Agency	CFR Title, Subtitle or Chapter
Payment From a Non-Federal Source for Travel Expenses	41, 304
Payment of Expenses Connected With the Death of Certain Employees	41, 303
Relocation Allowances	41, 302
Temporary Duty (TDY) Travel Allowances	41, 301
Geological Survey	30, IV
Government Accountability Office	4, I
Government Ethics, Office of	5, XVI
Government National Mortgage Association	24, III
Grain Inspection, Packers and Stockyards Administration	7, VIII; 9, II
Gulf Coast Ecosystem Restoration Council	2, LIX; 40, VIII
Harry S. Truman Scholarship Foundation	45, XVIII
Health and Human Services, Department of	2, III; 5, XLV; 45, Subtitle A
Centers for Medicare & Medicaid Services	42, IV
Child Support Enforcement, Office of	45, III
Children and Families, Administration for	45, II, III, IV, X, XIII
Community Services, Office of	45, X
Family Assistance, Office of	45, II
Federal Acquisition Regulation	48, 3
Food and Drug Administration	21, I
Indian Health Service	25, V
Inspector General (Health Care), Office of	42, V
Public Health Service	42, I
Refugee Resettlement, Office of	45, IV
Homeland Security, Department of	2, XXX; 5, XXXVI; 6, I; 8, I
Coast Guard	33, I; 46, I; 49, IV
Coast Guard (Great Lakes Pilotage)	46, III
Customs and Border Protection	19, I
Federal Emergency Management Agency	44, I
Human Resources Management and Labor Relations Systems	5, XCVII
Immigration and Customs Enforcement Bureau	19, IV
Transportation Security Administration	49, XII
HOPE for Homeowners Program, Board of Directors of	24, XXIV
Housing, Office of, and Multifamily Housing Assistance Restructuring, Office of	24, IV
Housing and Urban Development, Department of	2, XXIV; 5, LXV; 24, Subtitle B
Community Planning and Development, Office of Assistant Secretary for	24, V, VI
Equal Opportunity, Office of Assistant Secretary for	24, I
Federal Acquisition Regulation	48, 24
Federal Housing Enterprise Oversight, Office of	12, XVII
Government National Mortgage Association	24, III
Housing—Federal Housing Commissioner, Office of Assistant Secretary for	24, II, VIII, X, XX
Housing, Office of, and Multifamily Housing Assistance Restructuring, Office of	24, IV
Inspector General, Office of	24, XII
Public and Indian Housing, Office of Assistant Secretary for	24, IX
Secretary, Office of	24, Subtitle A, VII
Housing—Federal Housing Commissioner, Office of Assistant Secretary for	24, II, VIII, X, XX
Immigration and Customs Enforcement Bureau	19, IV
Immigration Review, Executive Office for	8, V
Independent Counsel, Office of	28, VII
Independent Counsel, Offices of	28, VI
Indian Affairs, Bureau of	25, I, V
Indian Affairs, Office of the Assistant Secretary	25, VI
Indian Arts and Crafts Board	25, II
Indian Health Service	25, V
Industry and Security, Bureau of	15, VII
Information Resources Management, Office of	7, XXVII
Information Security Oversight Office, National Archives and Records Administration	32, XX

Agency	CFR Title, Subtitle or Chapter
Inspector General	
Agriculture Department	7, XXVI
Health and Human Services Department	42, V
Housing and Urban Development Department	24, XII, XV
Institute of Peace, United States	22, XVII
Inter-American Foundation	5, LXIII; 22, X
Interior, Department of	2, XIV
American Indians, Office of the Special Trustee	25, VII
Endangered Species Committee	50, IV
Federal Acquisition Regulation	48, 14
Federal Property Management Regulations System	41, 114
Fish and Wildlife Service, United States	50, I, IV
Geological Survey	30, IV
Indian Affairs, Bureau of	25, I, V
Indian Affairs, Office of the Assistant Secretary	25, VI
Indian Arts and Crafts Board	25, II
Land Management, Bureau of	43, II
National Indian Gaming Commission	25, III
National Park Service	36, I
Natural Resource Revenue, Office of	30, XII
Ocean Energy Management, Bureau of	30, V
Reclamation, Bureau of	43, I
Safety and Enforcement Bureau, Bureau of	30, II
Secretary of the Interior, Office of	2, XIV; 43, Subtitle A
Surface Mining Reclamation and Enforcement, Office of	30, VII
Internal Revenue Service	26, I
International Boundary and Water Commission, United States and Mexico, United States Section	22, XI
International Development, United States Agency for	22, II
Federal Acquisition Regulation	48, 7
International Development Cooperation Agency, United States	22, XII
International Development Finance Corporation, U.S.	5, XXXIII; 22, VII
International Joint Commission, United States and Canada	22, IV
International Organizations Employees Loyalty Board	5, V
International Trade Administration	15, III; 19, III
International Trade Commission, United States	19, II
Interstate Commerce Commission	5, XL
Investment Security, Office of	31, VIII
James Madison Memorial Fellowship Foundation	45, XXIV
Japan–United States Friendship Commission	22, XVI
Joint Board for the Enrollment of Actuaries	20, VIII
Justice, Department of	2, XXVIII; 5, XXVIII; 28, I, XI; 40, IV
Alcohol, Tobacco, Firearms, and Explosives, Bureau of	27, II
Drug Enforcement Administration	21, II
Federal Acquisition Regulation	48, 28
Federal Claims Collection Standards	31, IX
Federal Prison Industries, Inc.	28, III
Foreign Claims Settlement Commission of the United States	45, V
Immigration Review, Executive Office for	8, V
Independent Counsel, Offices of	28, VI
Prisons, Bureau of	28, V
Property Management Regulations	41, 128
Labor, Department of	2, XXIX; 5, XLII
Employee Benefits Security Administration	29, XXV
Employees' Compensation Appeals Board	20, IV
Employment and Training Administration	20, V
Employment Standards Administration	20, VI
Federal Acquisition Regulation	48, 29
Federal Contract Compliance Programs, Office of	41, 60
Federal Procurement Regulations System	41, 50
Labor-Management Standards, Office of	29, II, IV
Mine Safety and Health Administration	30, I
Occupational Safety and Health Administration	29, XVII
Public Contracts	41, 50

Agency	CFR Title, Subtitle or Chapter
Secretary of Labor, Office of	29, Subtitle A
Veterans' Employment and Training Service, Office of the Assistant Secretary for	41, 61; 20, IX
Wage and Hour Division	29, V
Workers' Compensation Programs, Office of	20, I, VII
Labor-Management Standards, Office of	29, II, IV
Land Management, Bureau of	43, II
Legal Services Corporation	45, XVI
Libraries and Information Science, National Commission on	45, XVII
Library of Congress	36, VII
Copyright Royalty Board	37, III
U.S. Copyright Office	37, II
Management and Budget, Office of	5, III, LXXVII; 14, VI; 48, 99
Marine Mammal Commission	50, V
Maritime Administration	46, II
Merit Systems Protection Board	5, II, LXIV
Micronesian Status Negotiations, Office for	32, XXVII
Military Compensation and Retirement Modernization Commission	5, XCIX
Millennium Challenge Corporation	22, XIII
Mine Safety and Health Administration	30, I
Minority Business Development Agency	15, XIV
Miscellaneous Agencies	1, IV
Monetary Offices	31, I
Morris K. Udall Scholarship and Excellence in National Environmental Policy Foundation	36, XVI
Museum and Library Services, Institute of	2, XXXI
National Aeronautics and Space Administration	2, XVIII; 5, LIX; 14, V
Federal Acquisition Regulation	48, 18
National Agricultural Library	7, XLI
National Agricultural Statistics Service	7, XXXVI
National and Community Service, Corporation for	2, XXII; 45, XII, XXV
National Archives and Records Administration	2, XXVI; 5, LXVI; 36, XII
Information Security Oversight Office	32, XX
National Capital Planning Commission	1, IV, VI
National Counterintelligence Center	32, XVIII
National Credit Union Administration	5, LXXXVI; 12, VII
National Crime Prevention and Privacy Compact Council	28, IX
National Drug Control Policy, Office of	2, XXXVI; 21, III
National Endowment for the Arts	2, XXXII
National Endowment for the Humanities	2, XXXIII
National Foundation on the Arts and the Humanities	45, XI
National Geospatial-Intelligence Agency	32, I
National Highway Traffic Safety Administration	23, II, III; 47, VI; 49, V
National Imagery and Mapping Agency	32, I
National Indian Gaming Commission	25, III
National Institute of Food and Agriculture	7, XXXIV
National Institute of Standards and Technology	15, II; 37, IV
National Intelligence, Office of Director of	5, IV; 32, XVII
National Labor Relations Board	5, LXI; 29, I
National Marine Fisheries Service	50, II, IV
National Mediation Board	5, CI; 29, X
National Oceanic and Atmospheric Administration	15, IX; 50, II, III, IV, VI
National Park Service	36, I
National Railroad Adjustment Board	29, III
National Railroad Passenger Corporation (AMTRAK)	49, VII
National Science Foundation	2, XXV; 5, XLIII; 45, VI
Federal Acquisition Regulation	48, 25
National Security Council	32, XXI
National Security Council and Office of Science and Technology Policy	47, II
National Technical Information Service	15, XI
National Telecommunications and Information Administration	15, XXIII; 47, III, IV, V
National Transportation Safety Board	49, VIII

Agency	CFR Title, Subtitle or Chapter
Natural Resource Revenue, Office of	30, XII
Natural Resources Conservation Service	7, VI
Navajo and Hopi Indian Relocation, Office of	25, IV
Navy, Department of	32, VI
Federal Acquisition Regulation	48, 52
Neighborhood Reinvestment Corporation	24, XXV
Northeast Interstate Low-Level Radioactive Waste Commission	10, XVIII
Nuclear Regulatory Commission	2, XX; 5, XLVIII; 10, I
Federal Acquisition Regulation	48, 20
Occupational Safety and Health Administration	29, XVII
Occupational Safety and Health Review Commission	29, XX
Ocean Energy Management, Bureau of	30, V
Oklahoma City National Memorial Trust	36, XV
Operations Office	7, XXVIII
Patent and Trademark Office, United States	37, I
Payment From a Non-Federal Source for Travel Expenses	41, 304
Payment of Expenses Connected With the Death of Certain Employees	41, 303
Peace Corps	2, XXXVII; 22, III
Pennsylvania Avenue Development Corporation	36, IX
Pension Benefit Guaranty Corporation	29, XL
Personnel Management, Office of	5, I, IV, XXXV; 45, VIII
Federal Acquisition Regulation	48, 17
Federal Employees Group Life Insurance Federal Acquisition Regulation	48, 21
Federal Employees Health Benefits Acquisition Regulation	48, 16
Human Resources Management and Labor Relations Systems, Department of Homeland Security	5, XCVII
Pipeline and Hazardous Materials Safety Administration	49, I
Postal Regulatory Commission	5, XLVI; 39, III
Postal Service, United States	5, LX; 39, I
Postsecondary Education, Office of	34, VI
President's Commission on White House Fellowships	1, IV
Presidential Documents	3
Presidio Trust	36, X
Prisons, Bureau of	28, V
Privacy and Civil Liberties Oversight Board	6, X
Procurement and Property Management, Office of	7, XXXII
Public Contracts, Department of Labor	41, 50
Public Health Service	42, I
Public and Indian Housing, Office of Assistant Secretary for	24, IX
Railroad Retirement Board	20, II
Reclamation, Bureau of	43, I
Refugee Resettlement, Office of	45, IV
Relocation Allowances	41, 302
Research and Innovative Technology Administration	49, XI
Rural Business-Cooperative Service	7, XVIII, XLII
Rural Development Administration	7, XLII
Rural Housing Service	7, XVIII, XXXV
Rural Utilities Service	7, XVII, XVIII, XLII
Safety and Environmental Enforcement, Bureau of	30, II
Saint Lawrence Seaway Development Corporation	33, IV
Science and Technology Policy, Office of	32, XXIV
Science and Technology Policy, Office of, and National Security Council	47, II
Secret Service	31, IV
Securities and Exchange Commission	5, XXXIV; 17, II
Selective Service System	32, XVI
Small Business Administration	2, XXVII; 13, I
Smithsonian Institution	36, V
Social Security Administration	2, XXIII; 20, III; 48, 23
Soldiers' and Airmen's Home, United States	5, XI
Special Counsel, Office of	5, VIII
Special Education and Rehabilitative Services, Office of	34, III
State, Department of	2, VI; 22, I; 28, XI
Federal Acquisition Regulation	48, 6

Agency	CFR Title, Subtitle or Chapter
Surface Mining Reclamation and Enforcement, Office of	30, VII
Surface Transportation Board	49, X
Susquehanna River Basin Commission	18, VIII
Tennessee Valley Authority	5, LXIX; 18, XIII
Trade Representative, United States, Office of	15, XX
Transportation, Department of	2, XII; 5, L
Commercial Space Transportation	14, III
Emergency Management and Assistance	44, IV
Federal Acquisition Regulation	48, 12
Federal Aviation Administration	14, I
Federal Highway Administration	23, I, II
Federal Motor Carrier Safety Administration	49, III
Federal Railroad Administration	49, II
Federal Transit Administration	49, VI
Maritime Administration	46, II
National Highway Traffic Safety Administration	23, II, III; 47, IV; 49, V
Pipeline and Hazardous Materials Safety Administration	49, I
Saint Lawrence Seaway Development Corporation	33, IV
Secretary of Transportation, Office of	14, II; 49, Subtitle A
Transportation Statistics Bureau	49, XI
Transportation, Office of	7, XXXIII
Transportation Security Administration	49, XII
Transportation Statistics Bureau	49, XI
Travel Allowances, Temporary Duty (TDY)	41, 301
Treasury, Department of the	2, X; 5, XXI; 12, XV; 17, IV; 31, IX
Alcohol and Tobacco Tax and Trade Bureau	27, I
Community Development Financial Institutions Fund	12, XVIII
Comptroller of the Currency	12, I
Customs and Border Protection	19, I
Engraving and Printing, Bureau of	31, VI
Federal Acquisition Regulation	48, 10
Federal Claims Collection Standards	31, IX
Federal Law Enforcement Training Center	31, VII
Financial Crimes Enforcement Network	31, X
Fiscal Service	31, II
Foreign Assets Control, Office of	31, V
Internal Revenue Service	26, I
Investment Security, Office of	31, VIII
Monetary Offices	31, I
Secret Service	31, IV
Secretary of the Treasury, Office of	31, Subtitle A
Truman, Harry S. Scholarship Foundation	45, XVIII
United States and Canada, International Joint Commission	22, IV
United States and Mexico, International Boundary and Water Commission, United States Section	22, XI
U.S. Copyright Office	37, II
Utah Reclamation Mitigation and Conservation Commission	43, III
Veterans Affairs, Department of	2, VIII; 38, I
Federal Acquisition Regulation	48, 8
Veterans' Employment and Training Service, Office of the Assistant Secretary for	41, 61; 20, IX
Vice President of the United States, Office of	32, XXVIII
Wage and Hour Division	29, V
Water Resources Council	18, VI
Workers' Compensation Programs, Office of	20, I, VII
World Agricultural Outlook Board	7, XXXVIII

List of CFR Sections Affected

All changes in this volume of the Code of Federal Regulations (CFR) that were made by documents published in the FEDERAL REGISTER since January 1, 2015 are enumerated in the following list. Entries indicate the nature of the changes effected. Page numbers refer to FEDERAL REGISTER pages. The user should consult the entries for chapters, parts and subparts as well as sections for revisions.

For changes to this volume of the CFR prior to this listing, consult the annual edition of the monthly List of CFR Sections Affected (LSA). The LSA is available at *www.govinfo.gov*. For changes to this volume of the CFR prior to 2001, see the ''List of CFR Sections Affected, 1949–1963, 1964–1972, 1973–1985, and 1986–2000'' published in 11 separate volumes. The ''List of CFR Sections Affected 1986–2000'' is available at *www.govinfo.gov*.

2015

40 CFR

80 FR Page

Chapter I

147.2150 Added; eff. 7–6–15 18318
147.2151 Heading revised; (a) amended; eff. 7–6–15 18319
147.2154 Removed; eff. 7–6–15 18319
147.2155 Removed; eff. 7–6–15 18319
147.2400 (a) introductory text and (c)(1) revised; (a)(1) through (4) removed; (c)(5) added eff. 7–6–15 18322

2016

40 CFR

81 FR Page

Chapter I

141.21—141.29 (Subpart C) Appendix A amended 46844
141.35 (b)(1), (2), (c)(1), (2), (3)(i), (ii) and (4) amended; (c)(5)(i), (6) introductory text, (d)(2) and (e) revised 92684
141.40 (a) introductory text, (4)(i), (5)(ii) and (vi) amended; (a)(1), (2)(i)(A), (ii)(A), (C), (3), (4)(i)(B), (C), (ii) introductory text, (5)(v) and (c) revised; (a)(4)(ii)(F) removed; (a)(4)(iii) added 92688
147 Authority citation revised 74929, 95483

40 CFR—Continued

81 FR Page

Chapter I—Continued

Regulation at 81 FR 74929 withdrawn 95484
147.900 Added 74929, 95483
Regulation at 81 FR 74929 withdrawn 95484
147.901 Heading revised; (a) amended 74930, 95484
Regulation at 81 FR 74930 withdrawn 95484
147.902 Added 74930, 95484
Regulation at 81 FR 74930 withdrawn 95484
147.903 Heading revised 74930, 95484
Regulation at 81 FR 74930 withdrawn 95484
147.904 Removed 74930, 95484
Regulation at 81 FR 74930 withdrawn 95484

2017

40 CFR

82 FR Page

Chapter I

136.1 (a) revised 40846
136.2 (d) and (f) revised 40846

40 CFR—Continued

82 FR Page

Chapter I—Continued

136.3 (b)(19)(vii), (viii), (33), and (34) redesignated as (b)(19)(ix), (x), (35), and (36); (b)(26) through (32) redesignated as (b)(27) through (33); new (b)(19)(vii), (viii), (25)(ii), and (iii) added; (b)(20)(v) removed; (a) introductory text, table IA, table IB, table IC, table ID, table IF, table IG, table IH, (b) introductory text, (8)(v), (xiii), (xv), (10)(viii) through (lviii), (lxi), (lxii), (lxiii), (lxviii), (15)(v), (viii), (ix), (x), (xii), (xiii), (xv), (xvi), (xvii), (xxii), (xxiii), (xxiv), (xxx), (xxxv), (xxxvii), (xxxix), (xlii), (l), (lii), (lv), (lviii), (lix), (lxi), (lxiv), (lxvi), (lxviii), (20)(i) through (iv), (25)(i), new (35), (c), and (e) table II revised 40846

136.4 (a) introductory text, (b), and (c) revised 40874

136.5 (a), (b), (c)(1), and (d) revised 40875

136.6 (b)(1) and (2) introductory text revised; (b)(4)(xvii) removed; (b)(4)(xviii) through first (xxii) redesignated as (b)(4)(xvii) through (xxi); (c) added 40875

136 Appendix A amended 40875

Appendix B revised 40939

141 Subpart C, Appendix A amended 34867

147 Regulation at 81 FR 95483 eff. date delayed to 3–21–17 8499

147.900 Regulation at 81 FR 95483 eff. date delayed to 3–21–17 8499

147.901 Regulation at 81 FR 95484 eff. date delayed to 3–21–17 8499

40 CFR—Continued

82 FR Page

Chapter I—Continued

147.902 Regulation at 81 FR 95484 eff. date delayed to 3–21–17 8499

147.903 Regulation at 81 FR 95484 eff. date delayed to 3–21–17 8499

147.904 Regulation at 81 FR 95484 eff. date delayed to 3–21–17 8499

2018

40 CFR

82 FR Page

Chapter I

141.21—141.29 (Subpart C) Appendix A amended 51644, 54676

Appendix A corrected 54676

147 Authority citation revised 36435

147.650 Heading and introductory text revised 36435

147.651 Revised 36435

147.1751 Section heading, introductory text, (a) and (b) introductory text revised; (e) through (h) added 17761

2019

40 CFR

84 FR Page

Chapter I

147 Authority citation revised 15121

147.1751 Introductory text, (a), (c) through (h) revised; (b)(1) amended; (b)(2) and (3) removed; (b)(4) redesignated as new (b)(2); (i) added 15121

147.2200 (a) introductory text revised 44230

2020

(No regulations published from January 1, 2020, through July 1, 2020)